FILMED 9 1995

FHWA REGION	STATE	PROJECT	
5	OHIO	BHF – 83(13) STP – 83(13)	

1/412

CUYAHOGA COUNTY
CUY – 6 – 14.99

STATE OF OHIO
DEPARTMENT OF TRANSPORTATION
CUY–6–14.99
REHABILITATION OF
VETERANS MEMORIAL BRIDGE
CITY OF CLEVELAND
CUYAHOGA COUNTY

BHF–83(13)
STP–83(13)
STP-83(33)

DESIGN DESIGNATION

CURRENT ADT (1994)	=	21,300
DESIGN YEAR ADT (2014)	=	24,100
DHV	=	2410
D	=	60%
T	=	4%
DESIGN SPEED	=	40 M.P.H.
POSTED SPEED	=	25 M.P.H.
FUNCTIONAL	=	URBAN
FUNCTIONAL CLASSIFICATION	=	URBAN ARTERIAL
DESIGN EXCEPTIONS	=	NONE REQUIRED

CONVENTIONAL SIGNS

County Line
Township Line
Section Line
Corporation Line
Fence Line (existing) (proposed)
Centerline
Trees , Stumps (to be removed)
Utility Poles: Telephone , Power , Light , General

Proposed Right of Way — RW —
Existing Right of Way — RW —
Property Line — PL — (in existing fence) × — PL — × —
Railroad
Guardrail (existing) (proposed)

INDEX OF SHEETS

TITLE SHEET 1
SCHEMATIC GEOMETRIC PLAN 2
TYPICAL SECTIONS 3,4
GENERAL NOTES 5,6,6A,6B
GENERAL SUMMARY 7,8,8A,8B
ROADWAY PLANS, QUANTITIES & DETAILS 9–13
MISCELLANEOUS DETAILS & QUANTITIES 14–16,16A,16B,17
DRAINAGE PLANS, QUANTITIES & DETAILS 18–20,20A,21,22
SEWER PROFILES 23–26
RESURFACING PLANS 27–30
MAINTENANCE OF TRAFFIC PLANS
M.O.T.NOTES 31-33, 33A, 33B
CONSTRUCTION SEQUENCE 34
MODIFICATIONS TO DETOUR PLANS 35
M.O.T. SUBSUMMARY 36,36A
PHASING PLANS 37–43,43A–43D,44
TRAFFIC CONTROL PLANS
TRAFFIC CONTROL NOTES 45,46,46A
GROUND MOUNTED SIGN QUANTITIES 47–49
OVERHEAD SIGN SUPPORT QUANTITIES 50
PAVEMENT MARKING QUANTITIES 51–53,53A,53B
TRAFFIC CONTROL PLANS 54–63
OVERHEAD SIGN SUPPORT DETAILS 64
MISCELLANEOUS DETAILS 64A
SIGNAL SUBSUMMARY 65
SIGNAL PLANS 66–72
VETERANS MEMORIAL BRIDGE DETOUR PLANS 73–87
ROADWAY LIGHTING PLANS 88–96,96A
DECORATIVE LIGHTING PLANS 97–130, *
STRUCTURE PLANS 131-404,150A,364A,366A,404A,404B
RIGHT–OF–WAY PLANS 405–412
* 97A, 130A THRU 130J, 143A

LINE DATA

PROJECT LIMITS

Detroit Avenue Sta. 103+94.94 to Sta. 130+92.24	2697.30 Lin. Ft.
Project Length	2697.30 Lin. Ft. or 0.511 Miles

ADD FOR WORK

Detroit Avenue Sta. 93+00.00 to Sta. 103+94.94	1094.94 Lin. Ft.
West 25th Street Sta. 14+27.00 to Sta. 22+63.00	836.00 Lin. Ft.
West 49th Street Sta. 6+80 to Sta. 0+00	680.00 Lin. Ft.
West 45th Street Sta. 2+25 to Sta. 13+06	1081.00 Lin. Ft.
Lorain Avenue Sta. 84+35 to Sta. 89+75	540.00 Lin. Ft.
Sta. 90+75 to Sta. 91+75	100.00 Lin. Ft.
Sta. 93+60 to Sta. 130+88	3728.00 Lin. Ft.
West 6th Street Sta. 3+58 to Sta. 16+74	1316.00 Lin. Ft.
West 3rd Street Sta. 3+49 to Sta. 16+65	1316.00 Lin. Ft.
Ontario Avenue Sta. 3+39 to Sta. 16+63	1324.00 Lin. Ft.
Lakeside Avenue Sta. 5+00 to Sta. 16+96	1196.00 Lin. Ft.
TOTAL LENGTH OF WORK	15909.24 LIN.FT. OR 3.013 MILES

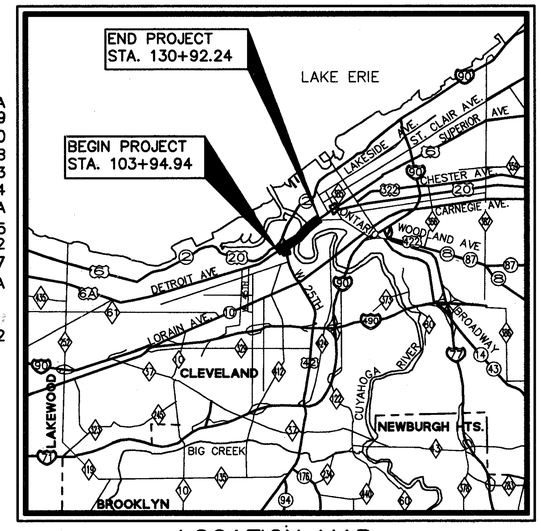

LOCATION MAP

SCALE IN MILES
1 0 1 2 3

Portion to be improved
Interstate US & State Routes
County Roads

SCALES

Plan 0 20 40
Profile Horizontal Vertical
Cross Section Horizontal Vertical

UNDERGROUND UTILITIES

TWO WORKING DAYS
BEFORE YOU DIG
CALL 800–362–2764 (Toll Free)
OHIO UTILITIES PROTECTION SERVICE
NON–MEMBERS
MUST BE CALLED DIRECTLY

SUPPLEMENTAL SPECIFICATIONS

802	4-13-90	820	3-18-92
852 ✓	7-30-93		
910 ✓	5-20-91		
927 ✓	10-19-81		
931 ✓	3-18-92		
933 ✓	2-10-87		
944 ✓	5-2-94		
940 ✓	6-10-87		
942 ✓	3-18-92		

SUPPLEMENTAL PRINTS OF STANDARD CONSTRUCTION DRAWINGS

BP-1.1	2-21-92	MC-6	1-30-84	MT-105.11	7-1-92	TC-41.41	8-2-79	TC-85.20	1-20-84	HL-30.32	5-1-87
BP-1.2	2-21-92	MC-9.2	5-6-91	TC-16.20	1-20-84	TC-41.50	3-26-79	EXJ-4-87	1-20-84	HL-40.10	5-1-87
BP-2.1	2-21-92	MC-11	8-1-78	TC-17.10	1-20-84	TC-42.10	8-19-77	GR-1.1	5-6-91	HL-50.21	5-1-87
BP-2.2	2-21-92	MH-1	12-18-84	TC-21.20	9-1-92	TC-42.20	3-26-79	GR-1.2	10-30-92	HL-60.11	5-1-87
BP-2.5	2-21-92	MH-3	12-18-84	TC-22.10	9-1-92	TC-51.10	1-20-84	HL-10.11	5-1-87	HL-60.31	5-1-87
BP-3.1	2-21-92	MH-5	6-12-75	TC-22.20	9-1-92	TC-51.11	1-20-84	HL-10.12	5-1-87		
BP-4.1	2-21-92	MT-95.30	10-10-88	TC-31.21	9-1-92	TC-52.10	4-3-79	HL-10.13	5-1-87		
BP-5.1	2-21-92	MT-95.31	10-10-88	TC-32.10	9-1-92	TC-52.20	4-3-79	HL-20.11	5-1-87		
BP-7.1	10-30-92	MT-95.32	8-25-89	TC-32.11	9-1-92	TC-71.10	9-10-91	HL-20.14	5-1-87		
CB-2-3 & 2-4	5-1-79	MT-95.41	10-1-92	TC-35.10	8-29-84	TC-81.20	1-20-84	HL-20.31	5-1-87		
CB-3	5-1-79	MT-99.10	11-14-86	TC-41.10	8-29-84	TC-82.10	8-29-84	HL-30.11	5-1-87		
		MT-101.60	7-1-92	TC-41.20	3-26-79	TC-83.20	1-20-84	HL-30.22	5-1-87		
MC-4	7-26-76	MT-105.10	7-1-92	TC-41.40	6-18-79	TC-85.10	1-20-84	HL-30.31	5-1-87		

1993 SPECIFICATIONS

The standard specifications of the State of Ohio, Department of Transportation, including changes and supplemental specifications listed in the proposal shall govern this improvement.

The right of way for this improvement will be provided by the State of Ohio.

I hereby approve these plans and declare that the making of this improvement will require the closing to traffic of the highway and that detours will be provided as indicated on sheet 61.

APPROVED: Bryan J. Hedlin
DATE: 7-1-94 DISTRICT DEPUTY DIRECTOR

APPROVED: B.D. Heublamm/WTC
DATE: 7/14/94 ENGINEER, BUREAU OF BRIDGES AND STRUCTURAL DESIGN

APPROVED: Christopher L. Ramsey
DATE: 7-29-94 DEPUTY DIRECTOR, DESIGN

APPROVED: James Lisan
DATE: 7-29-94 DIRECTOR, DEPARTMENT OF TRANSPORTATION

895

DEPARTMENT OF TRANSPORTATION
FEDERAL HIGHWAY ADMINISTRATION

APPROVED:

DIVISION ADMINISTRATOR DATE

Plans Prepared By:
HOWARD NEEDLES TAMMEN & BERGENDOFF
ARCHITECTS ENGINEERS PLANNERS HNTB

STATE OF OHIO JAMES P. PITZ E-56603 REGISTERED PROFESSIONAL ENGINEER

James P. Pitz

Project:
Date of Letting Nov. 4 1994 Contract No. 758

TSHEET2

PID 5561

SCHEMATIC GEOMETRIC PLAN

FHWA REGION	STATE	PROJECT	
5	OHIO		

2 / 412

CUYAHOGA COUNTY
CUY–6–14.99

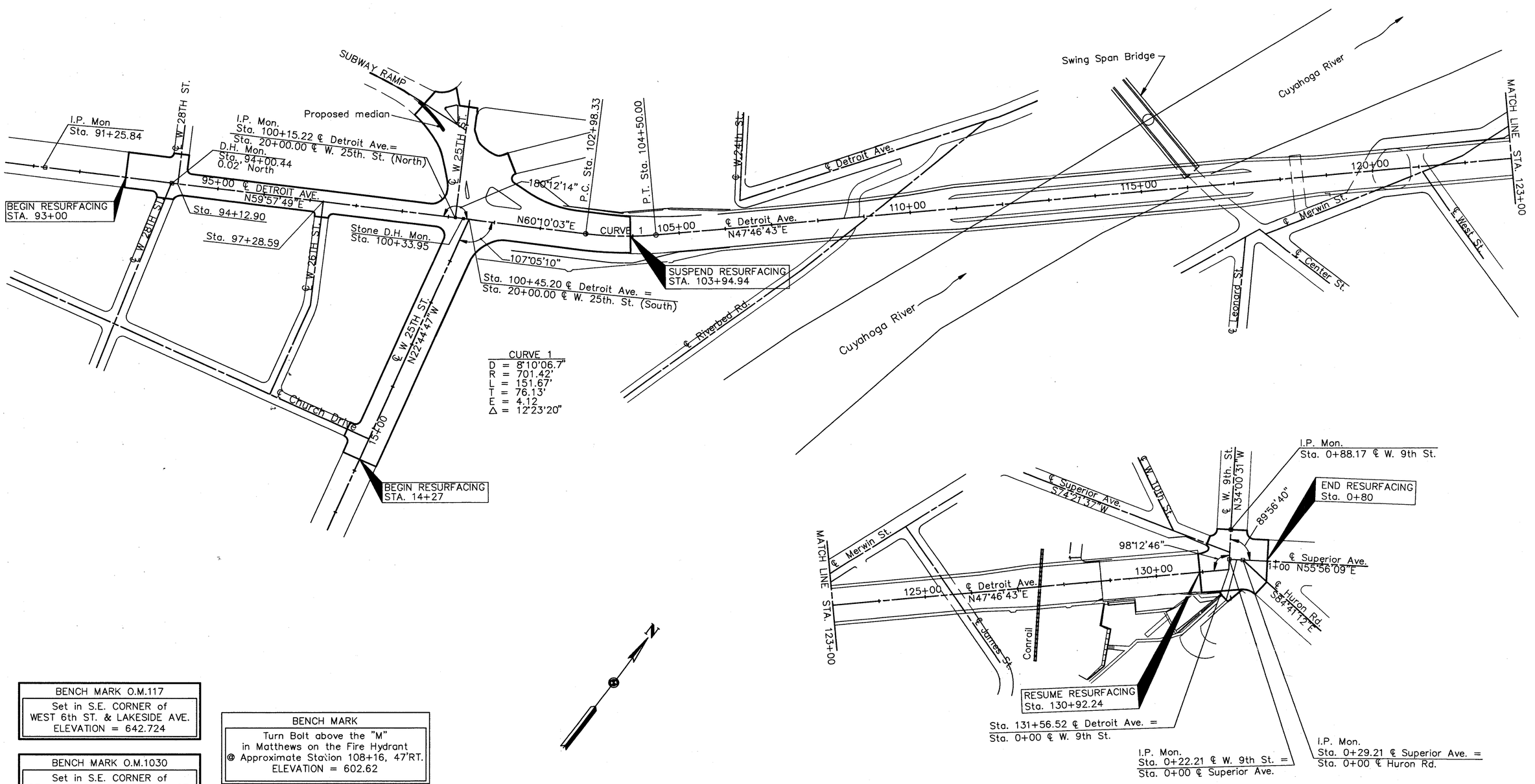

BENCH MARK O.M.117
Set in S.E. CORNER of WEST 6th ST. & LAKESIDE AVE. ELEVATION = 642.724

BENCH MARK O.M.1030
Set in S.E. CORNER of ST. CLAIR AVE. & WEST 6th ST. ELEVATION = 649.959

BENCH MARK
Turn Bolt above the "M" in Matthews on the Fire Hydrant @ Approximate Station 108+16, 47'RT. ELEVATION = 602.62

HOWARD NEEDLES TAMMEN & BERGENDOFF
ARCHITECTS ENGINEERS PLANNERS
HNTB

MADE BY: DGD DATE: 9/92
DRAWN BY: DJF DATE: 9/92
CHECKED BY: PF DATE: 9/92
SCALE: AS SHOWN
SCHEM.DWG

TYPICAL SECTIONS – TUNNEL EXPANSION JOINT REPAIR & EAST SIDE SUBWAY TOP SLAB REPLACEMENT

FHWA REGION	STATE	PROJECT	
5	OHIO		

CUYAHOGA COUNTY
CUY–6–14.99

3/412

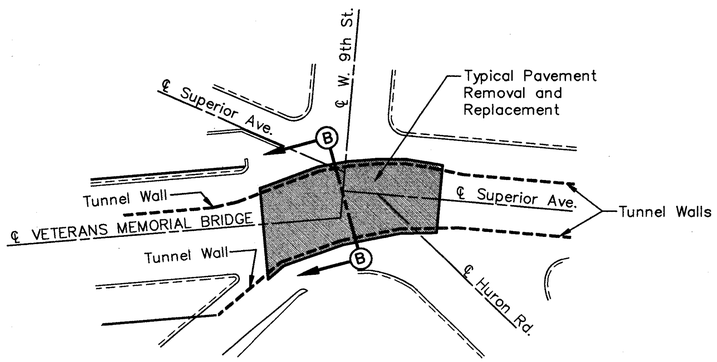

PLAN VIEW
EAST SIDE SUBWAY TOP SLAB REPLACEMENT
NO SCALE

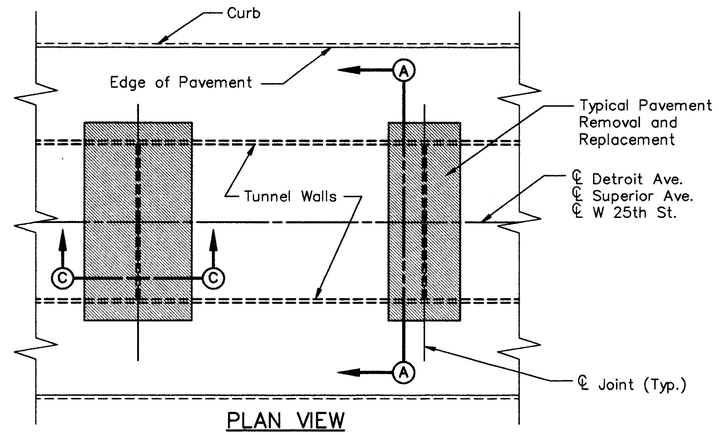

PLAN VIEW
TUNNEL EXPANSION JOINT REPAIR
NO SCALE

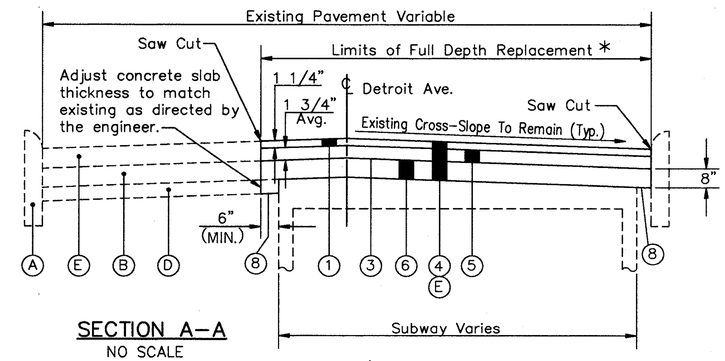

SECTION A–A
NO SCALE
DETROIT AVE.

*Limits of Removal at Sta. 94+94 Extends to the Back of Curb. Replace Curb Between Sta. 94+88.45 and Sta. 94+99.45.

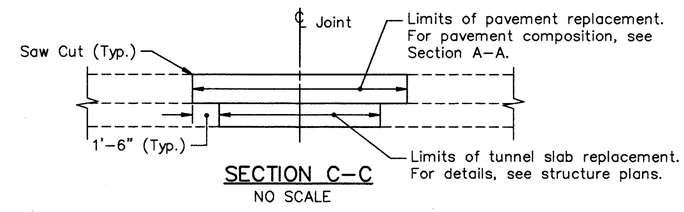

SECTION C–C
NO SCALE

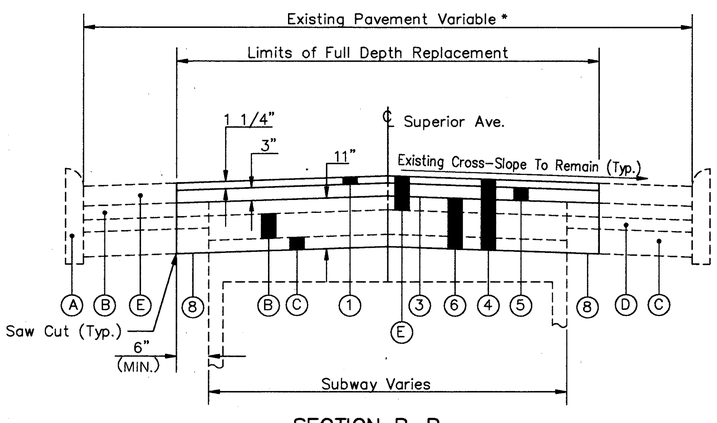

SECTION B–B
NO SCALE

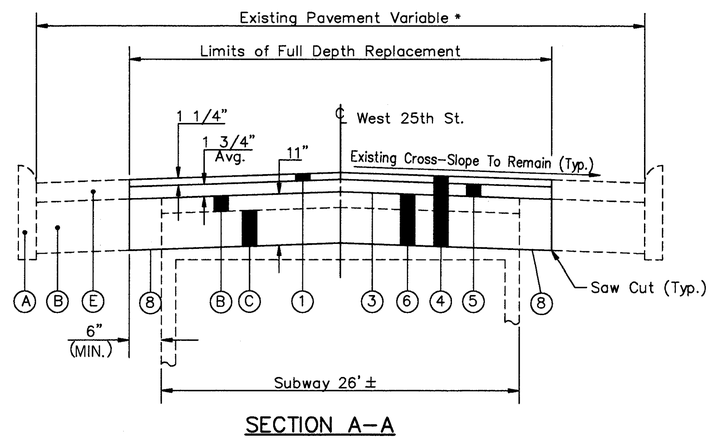

SECTION A–A
NO SCALE
WEST 25TH ST.

* SEE SHEETS 10-13 FOR LOCATIONS OF PAVEMENT REPLACEMENT.

LEGEND

PROPOSED

1. ITEM 448 – ASPHALT CONCRETE, SURFACE COURSE, TYPE 1, AC–20
2. ITEM 254 – PAVEMENT PLANING, BITUMINOUS (3" AVERAGE DEPTH)
3. ITEM 407 – TACK COAT
4. ITEM 202 – PAVEMENT REMOVED
5. ITEM 448 – ASPHALT CONCRETE, INTERMEDIATE COURSE, TYPE 2, AC–20
6. ITEM 305 – 8" OR 11" CONCRETE BASE, AS PER PLAN

** 8. ITEM 203 – SUBGRADE COMPACTION

** PAYMENT FOR THIS ITEM OF WORK SHALL BE AS PER 203.13(A) AS DETERMINED BY THE ENGINEER.

EXISTING

- A CURB
- B PAVING BRICK OR MEDINA BLOCK
- C CONCRETE BASE
- D GRAVEL FILL (CUSHION COURSE)
- E VARIABLE DEPTH ASPHALT SURFACE

NOTES

1. Pavement core over subway at Detroit Avenue indicates 8" of asphalt concrete over 3"of crumbled concrete over 13" of subway slab.
2. Pavement core over subway at West 25th. Street indicates 3–1/2" of asphalt concrete over 5" of brick over 6" of concrete base over 16" of subway slab.
3. Pavement core over subway at Superior Avenue indicates 6" of asphalt concrete over 5" of brick over 3" of disintegrated concrete over 16" of subway slab. Resurfacing done prior to this construction project will add another 1 1/4" of asphalt depth.

HOWARD NEEDLES TAMMEN & BERGENDOFF
ARCHITECTS ENGINEERS PLANNERS HNTB

MADE BY: PF DATE: 4/91
DRAWN BY: DJF DATE: 4/91
CHECKED BY: AHS DATE: 4/91
SCALE: NOT TO SCALE
11646\TYPSEC\TYPICAL1.DWG

FHWA REGION	STATE	PROJECT	
5	OHIO		

4
412

CUYAHOGA COUNTY
CUY-6-14.99

TYPICAL SECTION
ROADWAY RESURFACING

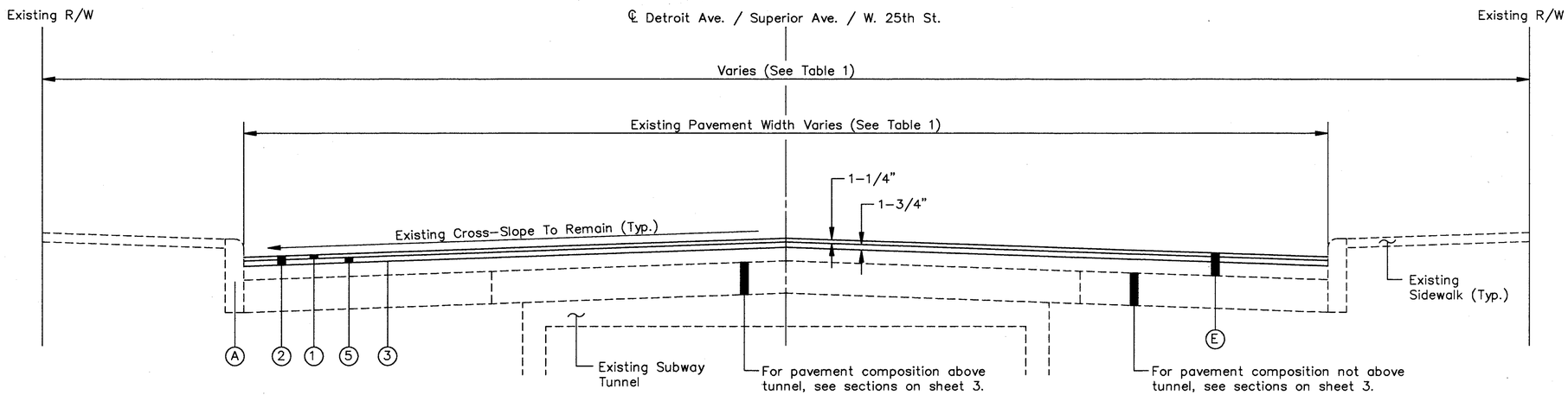

NORMAL SECTION
Not to Scale

Detroit Ave. ℄ Sta. 93+00 to Sta. 103+94.94	=	1094.94 L.F.
Veterans Memorial Bridge ℄ Sta. 130+92.24 to Sta. 131+56.52	=	64.28 L.F.
Superior Ave. ℄ Sta. 0+00 to Sta. 0+80	=	80 L.F.
W. 25th St. Sta. 14+27 to Sta. 22+64	=	837 L.F.
	Total =	2076.22 L.F.

NOTES:
- Typical Section has been taken from existing plans and is used to show the general roadway features only.
- For Legend See Sheet 3.

TABLE 1

ROADWAY	PAVEMENT WIDTH	RIGHT OF WAY WIDTH	EXISTING PAVEMENT
Detroit Ave.	48'	66'	See Section on Sheet 3.
Superior Ave.	102'	132'	See Section on Sheet 3.
W. 25th St.	71'	104'	See Section on Sheet 3.

HOWARD NEEDLES TAMMEN & BERGENDOFF
ARCHITECTS ENGINEERS PLANNERS
HNTB

MADE BY: JMW DATE: 12/88
DRAWN BY: DJF DATE: 12/90
CHECKED BY: PF DATE: 12/90
SCALE: NOT TO SCALE
TYPICAL2.DWG

GENERAL NOTES

FHWA REGION	STATE	PROJECT	
5	OHIO		

5/412

CUYAHOGA COUNTY
CUY–6–14.99

GENERAL

SCOPE OF SERVICES
THE WORK WITHIN THE LIMITS OF THIS IMPROVEMENT INCLUDES THE REHABILITATION OF THE VETERANS MEMORIAL BRIDGE, INCLUDING CONSTRUCTION OF DRAINAGE STRUCTURES BELOW THE VETERANS MEMORIAL BRIDGE, THE REPLACEMENT OF PAVEMENT OVER REPAIRED SUBWAY TUNNEL JOINTS, PAVEMENT PLANING, THE CONSTRUCTION OF AN ASPHALT CONCRETE OVERLAY, TRAFFIC CONTROL ITEMS, DETOUR ROUTE MODIFICATIONS AND OTHER RELATED ITEMS AS SHOWN ON THE PLANS OR AS STIPULATED IN THE NOTES.

EXISTING TYPICAL SECTIONS
EXISTING TYPICAL SECTIONS HAVE BEEN DEVELOPED FROM RECORD PLANS AND PAVEMENT CORES AND ARE BELIEVED TO REPRESENT THE WIDTH AND COMPOSITION OF THE EXISTING PAVEMENT, BUT THE STATE OF OHIO DOES NOT GUARANTEE THE ACCURACY OF SAME.

CONTINGENCY QUANTITIES
THE CONTRACTOR SHALL NOT ORDER MATERIALS OR PERFORM WORK FOR ITEMS DESIGNATED BY PLAN NOTE TO BE USED "AS DIRECTED BY THE ENGINEER" UNLESS AUTHORIZED BY THE ENGINEER. THE ACTUAL WORK LOCATIONS AND QUANTITIES USED FOR SUCH ITEMS SHALL BE INCORPORATED INTO THE FINAL CHANGE ORDER GOVERNING COMPLETION OF THIS PROJECT.

UTILITIES
LISTED BELOW ARE ALL UTILITIES LOCATED WITHIN THE PROJECT CONSTRUCTION LIMITS TOGETHER WITH THEIR RESPECTIVE OWNERS.

CLEVELAND PUBLIC POWER
1201 LAKESIDE AVENUE
CLEVELAND, OH. 44114
216–664–3922

EAST OHIO GAS CO.
1201 EAST 55th STREET
CLEVELAND, OH. 44103
216–736–6675

CITY OF CLEVELAND
DIVISION OF WATER
1201 LAKESIDE AVENUE
CLEVELAND, OH. 44114
216–664–2444

CITY OF CLEVELAND DIVISION
OF WATER POLLUTION CONTROL
1825 LAKESIDE AVENUE
CLEVELAND, OH. 44114
216–623–2513

NORTHCOAST CABLE LIMITED
3300 LAKESIDE AVENUE
CLEVELAND, OH. 44114
216–575–8016

WILLIAMS TELECOMMUNICATIONS CO.
1468 WEST NINTH STREET
SUITE 100
CLEVELAND, OH. 44113
216–579–1010

ACCESS TRANSMISSION SERVICES INC.
2400 NORTH GLENVILLE DRIVE
RICHARDSON, TX. 75082
214–918–6750

AT&T OUTSIDE PLANT PROTECTION
3833 WEYMOUTH ROAD
MEDINA, OH. 44256
216–723–9136

US SPRINT COMMUNICATIONS CO.
MIDWEST DIVISION
2650 BROADWAY
CLEVELAND, OH 44115
216–781–4443

AMERITECH
ROOM 400
13630 LORAIN AVENUE
CLEVELAND, OH 44111
216–476–6135

THE CLEVELAND ELECTRIC
ILLUMINATING CO.
55 PUBLIC SQUARE
P.O. BOX 5000
CLEVELAND, OH 44101
216–861–9000

NORTHEAST OHIO REGIONAL
SEWER DISTRICT
4747 EAST FORTY–NINTH STREET
CUYAHOGA HEIGHTS, OH. 44125
216–641–6000

CITY OF CLEVELAND DIVISION OF
ENGINEERING AND CONSTRUCTION
ROOM 518, CITY HALL
CLEVELAND, OH. 44114
216–664–2381

CITY OF CLEVELAND
SAFETY SIGNAL SYSTEM
310 CARNEGIE AVENUE
CLEVELAND, OH. 44115
216–664–3247

ICG ACCESS SERVICES, INC.
ROCKSIDE WOODS BLVD.
SUITE 239
INDEPENDENCE, OHIO 44131
216–447–0660

THE LOCATIONS OF THE UNDERGROUND UTILITIES SHOWN ON THE PLANS ARE AS OBTAINED FROM THE OWNERS AS REQUIRED BY SECTION 153.64 OF THE OHIO REVISED CODE.

ELEVATION DATUM
ALL ELEVATIONS ARE BASED ON C.R.G.S. DATUM.

WORK LIMITS
THE WORK LIMITS SHOWN ON THESE PLANS ARE FOR PHYSICAL CONSTRUCTION ONLY. THE INSTALLATION AND OPERATION OF ALL TEMPORARY TRAFFIC CONTROL AND TEMPORARY TRAFFIC CONTROL DEVICES REQUIRED BY THESE PLANS SHALL BE PROVIDED BY THE CONTRACTOR WHETHER INSIDE OR OUTSIDE THESE WORK LIMITS.

ITEM 623 – CONSTRUCTION LAYOUT STAKES, AS PER PLAN
THE CONTRACTOR, BEFORE REMOVING EXISTING PAVEMENT, SHALL PERFORM FIELD SURVEYS TO ESTABLISH EXISTING PAVEMENT ELEVATIONS AT CENTERLINE, LANE LINES, JOINTS, CROWN LOCATIONS AND GUTTER LINES AT EVERY 25' AS DIRECTED BY THE ENGR. AT THE FOLLOWING LOCATIONS:

1.) WEST 25th STREET – BETWEEN STA. 20+35 AND 22+80.
2.) SUBWAY RAMP – UP TO 125' WEST OF ℄ WEST 25th STREET.
3.) OLD SUPERIOR VIADUCT – UP TO 100' EAST OF WEST 25th STREET
4.) DETROIT AVENUE – BETWEEN STA. 100+00 AND 102+00.

A COPY OF FIELD SURVEY DATA SHALL BE PROVIDED TO THE ENGINEER. THE PROPOSED PAVEMENT REPLACEMENT SHALL BE PERFORMED USING ABOVE MENTIONED PAVEMENT ELEVATIONS TO REESTABLISH EXISTING CONDITIONS.

COMPENSATION FOR ALL SERVICES, MATERIALS, LABOR, EQUIPMENT, TOOLS, AND INCIDENTALS NECESSASARY TO PERFORM ABOVE DESCRIBED WORK SHALL BE PAID UNDER:

iTEM 623 – CONSTRUCTION LAYOUT STAKES, AS PER PLAN

ITEM 619 – FIELD OFFICE, TYPE C, AS PER PLAN

619.01 DESCRIPTION. ADD THE FOLLOWING:

THE FIELD OFFICE FOR THIS CONTRACT SHALL BE TYPE C, AS PER PLAN. FEATURES OF TYPE C FIELD OFFICE SHALL BE MODIFIED AS NOTED BELOW.

619.02 GENERAL. MODIFY THE PROVISIONS OF 619.02 AS FOLLOWS:

THE FIELD OFFICE SHALL BE ON, OR IN CLOSE PROXIMITY TO THE PROJECT SITE. THE LOCATION SHALL BE APPROVED BY THE ENGINEER. THE FIELD OFFICE SHALL BE FULLY OPERATIONAL AS SOON AS POSSIBLE AFTER EXECUTION OF THE CONTRACT, AND SHALL BE IN PLACE PRIOR TO THE START OF THE WORK.

REQUIREMENTS FOR THE FIELD OFFICE SHALL BE MODIFIED AS FOLLOWS:

1. THE FLOOR SPACE REQUIRED FOR THE FIELD OFFICE SHALL BE 1200 SQUARE FEET.
2. IN ADDITION TO THE ENGINEER'S ENCLOSED ROOM, A SEPARATE CONFERENCE ROOM SHALL BE PROVIDED WITH A MINIMUM AREA OF 200 SQUARE FEET. FURNISH WITH FOUR (4) FOLDING CONFERENCE TABLES, MINIMUM SIZE TOP 30–INCH BY 72–INCH, AND THIRTY (30) FOLDABLE CHAIRS.
3. THE COPIER SHALL BE CAPABLE OF PRODUCING MULTIPLE COPIES UP TO 11–INCH BY 17–INCH IN SIZE. FOR THE PURPOSE OF PRODUCING COLOR COPIES OF PRIMAVERA PROGRESS SCHEDULES, THE CONTRACTOR SHALL EITHER FURNISH COPIER CAPABLE OF PRODUCING COLOR COPIES, OR ARRANGE FOR A COPYING SERVICE TO PROVIDE COLOR COPIES AT THE CONTRACTOR'S EXPENSE.
4. PROVIDE A PLAIN PAPER–TYPE FACSIMILE MACHINE WITH AUTODIALING CAPABILITY.
5. PROVIDE TELEPHONE SERVICE AT EACH DESK AND IN THE CONFERENCE ROOM, INTERCONNECTED BETWEEN OFFICES. THE PRIVATE OFFICE AND CONFERENCE ROOM INSTRUMENTS SHALL BE EQUIPPED WITH SPEAKERS TO PERMIT CONVERSATIONS WITHOUT RAISING THE HANDSET WITH A FEATURE TO PERMIT THE ESTABLISHMENT OF CONFERENCE CALLS WITH OR WITHOUT RAISING THE HANDSET. A MINIMUM OF FOUR (4) OUTSIDE LINES SHALL BE PROVIDED, ONE OF WHICH SHALL BE DEDICATED FOR USE BY THE FACSIMILE MACHINE.
6. PROVIDE COMPUTER HARDWARE AND SOFTWARE AS PER SUBSECTIONS 619.021 AND 619.022, RESPECTIVELY.
7. PROVIDE TWO (2) FIRST AID KITS MAINTAINED ON A BIMONTHLY BASIS.
8. THE AREA OF THE FIELD OFFICE, INCLUDING THE PARKING AREA, SHALL BE ENCLOSED WITH A SECURITY FENCE. THE FENCING SHALL BE TYPE CLT, WITH EIGHT (8)–FOOT HEIGHT FABRIC AND THREE (3) STRAND BARB ARMS AND BARB WIRE AND SHALL INCLUDE A MINIMUM TWELVE (12)–FOOT LOCKABLE VEHICLE GATE AND A FOUR (4)–FOOT LOCKABLE PEDESTRIAN GATE.
9. BASE RADIO AND TEN (10) HAND HELD UNITS. *

ADD THE FOLLOWING:

619.021 COMPUTER HARDWARE. THE CONTRACTOR SHALL PROVIDE COMPUTER HARDWARE AND PERIPHERALS CONSISTING OF AND INCLUDING THE FOLLOWING:

(1) TWO (2) IBM PC COMPATIBLE NOTEBOOK COMPUTERS WITH 80486SL PROCESSOR OPERATING AT 33 MHZ, OR APPROVED EQUAL. THESE COMPUTERS SHALL BE PROVIDED WITH THE FOLLOWING AS A MINIMUM.

A. 200 MEGABYTE MINIMUM HARD DISK
B. 8 MEGABYTE RAM
C. ONE 3.5 INCH, 1.44 MB FLOPPY DRIVE
D. AC ADAPTER AND RECHARGEABLE BATTERIES
E. ACTIVE MATRIX VGA COLOR DISPLAY
F. ONE PARALLEL PORT AND ONE SERIAL PORT
G. ONE BUILT–IN TRACKBALL (OR EQUIVALENT)
H. ONE 14.4 V 32BIS, V.42BIS HAYES COMPATIBLE INTERNAL MODEM

(2) A COMPUTER MAINTENANCE AGREEMENT WITH A MINIMUM FOUR (4) HOUR ON–SITE MAINTENANCE FOR ALL HARDWARE STATED HEREIN.
(3) ONE (1) HEWLETT PACKARD PAINTJET XL300, CANON BJC–820, OR EQUAL PRINTER AND PARALLEL PRINTER CABLE.
(4) ONE (1) HEWLETT PACKARD DESKJET 500, OR APPROVED EQUAL PRINTER WITH 512K MEMORY, A–B SWITCH BOX AND PARALLEL PRINTER CABLE.
(5) ALL SUPPLIES REQUIRED FOR THE INTENDED USE OF THE PRINTERS.
(6) TWO (2) DOCKING STATIONS SHALL EACH INCLUDE ONE (1) VGA GRAPHICS ADAPTER WITH 1 MEGABYTE OF VIDEO RAM, ONE (1) 14 INCH SUPER VGA 1024X768 RESOLUTION WITH .28 DOT PITCH COLOR MONITOR, ONE (1) 101 KEY KEYBOARD AND ONE (1) MICROSOFT COMPATIBLE MOUSE.
(7) TWO (2) SURGE PROTECTORS – 15 AMP, SIX (6) OUTLET WITH CIRCUIT BREAKER CONTROL AND SURGE INDICATOR LIGHT.
(8) ONE (1) 250MB EXTERNAL TAPE BACKUP UNIT.

619.022 COMPUTER SOFTWARE. (FOR CONSTRUCTION MANAGEMENT SYSTEM)

THE CONTRACTOR SHALL FURNISH, LOAD, AND MAINTAIN THE FOLLOWING SOFTWARE ON BOTH COMPUTERS LISTED ABOVE:

(1) MS–DOS DISK OPERATING SYSTEM – VERSION 6.2
(2) MICROSOFT WINDOWS – VERSION 3.1.
(3) QUATTRO PRO FOR WINDOWS – VERSION 4.0
(4) WORD FOR WINDOWS – VERSION 2.0
(5) PARADOX FOR WINDOWS – VERSION 1.0
(6) PC–ANYWHERE – VERSION 4.5

* UNITS SHALL BE CAPABLE OF TRANSMITTING AND RECEIVING VOICE COMMUNICATION BETWEEN THE FIELD OFFICE AND ANY AREA ON THE PROJECT SITE.

HOWARD NEEDLES TAMMEN & BERGENDOFF
ARCHITECTS ENGINEERS PLANNERS
HNTB

MADE BY: PF DATE: 10/93
DRAWN BY: DJF DATE: 10/93
CHECKED BY: AHS DATE: 10/93
SCALE: –
11646\PLAN\GNOTES1.DWG

GENERAL NOTES

FHWA REGION	STATE	PROJECT	
5	OHIO		

6
412

CUYAHOGA COUNTY
CUY-6-14.99

619.023 COMPUTER SOFTWARE (FOR CPM SCHEDULING)

THE CONTRACTOR SHALL FURNISH, LOAD, AND MAINTAIN THE FOLLOWING SOFTWARE ON ONE OF THE COMPUTERS LISTED ABOVE:

(1) PRIMAVERA PROJECT PLANNER (CPM SCHEDULING PROGRAM, LATEST VERSION). PRIMAVERA PROJECT PLANNER SHALL BE THE SAME VERSION AS THAT UTILIZED BY THE CONTRACTOR IN DEVELOPING AND MAINTAINING HIS PROGRESS SCHEDULE AS REQUIRED UNDER ARTICLE 108.03. THE CONTRACTOR SHALL RETAIN PRIMAVERA TECHNICAL SUPPORT FOR THE LIFE OF THE CONTRACT.

ALL COMPUTER HARDWARE AND SOFTWARE FURNISHED BY THE CONTRACTOR SHALL BE MAINTAINED BY THE CONTRACTOR DURING THE LIFE OF THE CONTRACT. THE CONTRACTOR SHALL FURNISH THE ENGINEER WITH ALL MANUALS AND LICENSE AGREEMENTS AS WELL AS THE MAINTENANCE SERVICE AGREEMENT. CONTRACTOR-FURNISHED COMPUTER EQUIPMENT SHALL NOT EXPERIENCE DOWN TIME EXCEEDING 48 HOURS FROM NOTIFICATION BY THE ENGINEER. THE CONTRACTOR SHALL REPLACE STOLEN, VANDALIZED OR UNITS INOPERABLE WITHIN 48 HOURS OF NOTIFICATION BY THE ENGINEER.

INFORMATION FOR PROPOSED "EQUAL" EQUIPMENT SHALL BE SUBMITTED TO THE DIRECTOR AND BE APPROVED PRIOR TO USE.

ALONG WITH THE FURNITURE REQUIRED UNDER 619.02, THE CONTRACTOR SHALL ALSO PROVIDE THE NECESSARY STANDS, TABLES, ETC., TO ACCOMMODATE THE ABOVE COMPUTERS AND RELATED EQUIPMENT.

619.03 BASIS OF PAYMENT.

AMEND AS FOLLOWS:

THE LUMP SUM PRICE BID FOR THE ITEM FIELD OFFICE SHALL INCLUDE THE COST OF THE CONTRACTOR FURNISHED COMPUTER SOFTWARE THAT WILL BECOME THE DEPARTMENT'S PROPERTY AT THE CONCLUSION OF THE CONTRACT.

CONSTRUCTION NOISE

ACTIVITIES AND LAND USE ADJACENT TO THIS PROJECT MAY BE AFFECTED BY CONSTRUCTION NOISE. IN ORDER TO MINIMIZE ANY ADVERSE CONSTRUCTION NOISE IMPACTS, ANY POWER-OPERATED CONSTRUCTION-TYPE DEVICE SHALL NOT BE OPERATED BETWEEN THE HOURS OF 9:00 PM AND 6:00 AM. IN ADDITION, ANY SUCH DEVICE SHALL NOT BE OPERATED AT ANY TIME IN SUCH A MANNER THAT THE NOISE CREATED SUBSTATIALLY EXCEEDS THE NOISE CUSTOMARILY AND NECESSARILY ATTENDANT TO THE REASONABLE AND EFFICIENT PERFORMANCE OF SUCH EQUIPMENT.

EROSION CONTROL

ITEM 659, SEEDING AND MULCHING
SEEDING AND MULCHING SHALL BE APPLIED TO ALL AREAS OF EXPOSED SOIL WITHIN THE CONSTRUCTION LIMITS. QUANTITY CALCULATIONS FOR ITEM 659, SEEDING AND MULCHING, ARE BASED ON THE LIMITS NEEDED FOR CONSTRUCTION OF THE SEWERS UNDER THE VETERANS MEMORIAL BRIDGE.

THE FOLLOWING ESTIMATED QUANTITY HAS BEEN CARRIED TO THE GENERAL SUMMARY:

ITEM 659 – SEEDING AND MULCHING	500 SQ. YD.
ITEM 659 – COMMERCIAL FERTILIZER	0.1 TON

TEMPORARY SOIL EROSION AND SEDIMENT CONTROL
THE FOLLOWING ESTIMATED QUANTITIES ARE TO BE USED AS DIRECTED BY THE ENGINEER FOR TEMPORARY SOIL EROSION AND SEDIMENT CONTROL MEASURES:

ITEM 207 – STRAW OR HAY BALES	200 EACH
ITEM 207 – FILTER FABRIC FENCE	200 LIN. FT.

WATERING AND MOWING PERMANENT SEEDED AREAS
THE FOLLOWING ESTIMATED QUANTITIES ARE TO BE USED AS DIRECTED BY THE ENGINEER TO PROMOTE GROWTH AND TO CARE FOR PERMANENT SEEDED AREAS PER 659.09:

ITEM 659 – WATER	50 M. GAL.
ITEM 659 – MOWING	50 M SQ. FT.

DRAINAGE

CROSSINGS AND CONNECTIONS TO EXISTING PIPES AND UTILITIES
WHERE PLANS PROVIDE FOR A PROPOSED CONDUIT TO BE CONNECTED TO, OR CROSS OVER OR UNDER AN EXISTING SEWER OR UNDERGROUND UTILITY, THE CONTRACTOR SHALL LOCATE THE EXISTING PIPES OR UTILITIES BOTH AS TO LINE AND GRADE BEFORE STARTING TO LAY THE PROPOSED CONDUIT.

IF IT IS DETERMINED THAT THE ELEVATION OF THE EXISTING CONDUIT, OR EXISTING APPURTENANCE TO BE CONNECTED, DIFFERS FROM THE PLAN ELEVATION OR RESULTS IN A CHANGE IN THE PLAN CONDUIT SLOPE, THE ENGINEER SHALL BE NOTIFIED BEFORE STARTING CONSTRUCTION OF ANY PORTION OF THE PROPOSED CONDUIT WHICH WILL BE AFFECTED BY THE VARIANCE IN THE EXISTING ELEVATIONS.

IF IT IS DETERMINED THAT THE PROPOSED CONDUIT WILL INTERSECT AN EXISTING SEWER OR UNDERGROUND UTILITY IF CONSTRUCTED AS SHOWN ON THE PLAN, THE ENGINEER SHALL BE NOTIFIED BEFORE STARTING CONSTRUCTION OF ANY PORTION OF THE PROPOSED CONDUIT WHICH WOULD BE AFFECTED BY THE INTERFERENCE WITH AN EXISTING FACILITY.

PAYMENT FOR ALL THE OPERATIONS DESCRIBED ABOVE SHALL BE INCLUDED IN THE CONTRACT PRICE FOR THE PERTINENT 603 CONDUIT ITEM.

REVIEW OF DRAINAGE FACILITIES
BEFORE ANY WORK IS STARTED ON THIS PROJECT, AND AGAIN BEFORE FINAL ACCEPTANCE BY THE STATE, REPRESENTATIVES OF THE STATE AND THE CONTRACTOR, ALONG WITH LOCAL REPRESENTATIVES, SHALL MAKE AN INSPECTION OF THE EXISTING SEWERS WITHIN THE WORK LIMITS WHICH ARE TO REMAIN IN SERVICE AND WHICH MAY BE AFFECTED BY THE WORK. THE CONDITION OF THE EXISTING CONDUITS AND THEIR APPURTENANCES SHALL BE DETERMINED FROM FIELD OBSERVATIONS. RECORDS OF THE INSPECTIONS SHALL BE KEPT IN WRITING BY THE STATE.

ALL NEW CONDUITS, INLETS, CATCH BASINS AND MANHOLES CONSTRUCTED AS A PART OF THE PROJECT SHALL BE FREE OF ALL FOREIGN MATTER AND IN A CLEAN CONDITION BEFORE THE PROJECT WILL BE ACCEPTED BY THE STATE.

ALL EXISTING SEWERS INSPECTED BY THE ABOVE-MENTIONED PARTIES SHALL BE MAINTAINED AND LEFT IN A CONDITION REASONABLY COMPARABLE TO THAT DETERMINED BY THE ORIGINAL INSPECTION. ANY CHANGE IN THE CONDITION RESULTING FROM THE CONTRACTOR'S OPERATIONS SHALL BE CORRECTED BY THE CONTRACTOR TO THE SATISFACTION OF THE ENGINEER.

PAYMENT FOR ALL OPERATIONS DESCRIBED ABOVE SHALL BE INCLUDED IN THE UNIT PRICES BID FOR THE PERTINENT 603 CONDUIT ITEMS OF THE CONTRACT.

ITEM 603-6" CONDUIT, TYPE F, 707.17 NON-PERFORATED ASTMD 3034, SDR35, SS931 OR SS944
FOR CONSTRUCTION OF ALL UNDERDRAINS, THIS ITEM SHALL BE INCLUDED TO OUTLET ALL NEW UNDERDRAINS INTO NEW OR EXISTING CATCH BASINS.

THE FOLLOWING ESTIMATED QUANTITY HAS BEEN INCLUDED IN THE GENERAL SUMMARY FOR USE AS DIRECTED BY THE ENGINEER.

ITEM 603-6" CONDUIT, TYPE F, 707.17 NON-PERFORATED ASTM D 3034, SDR35, SS931 OR SS944	80 LIN. FT.

ITEM 604 – CATCH BASIN ADJUSTED TO GRADE
DURING RESURFACING, EXISTING CATCH BASINS MAY NEED TO BE ADJUSTED DUE TO EXISTING CONDITIONS AND ELEVATIONS. QUANTITIES SHALL BE PAID FOR AT THE CONTRACT UNIT PRICE FOR ITEM 604 – CATCH BASIN, ADJUSTED TO GRADE.

THE FOLLOWING ESTIMATED QUANTITY HAS BEEN INCLUDED IN THE GENERAL SUMMARY FOR USE AS DIRECTED BY THE ENGINEER.

ITEM 604 – CATCH BASIN, ADJUSTED TO GRADE	20	EACH

ITEM 604 – MANHOLE ADJUSTED TO GRADE, AS PER PLAN
DURING RESURFACING, EXISTING MANHOLES MAY NEED TO BE ADJUSTED DUE TO EXISTING CONDITIONS AND ELEVATIONS. QUANTITIES SHALL BE PAID FOR AT THE CONTRACT UNIT PRICE FOR ITEM 604 – MANHOLE, ADJUSTED TO GRADE, AS PER PLAN.

604.03 CONSTRUCTION METHODS: MANHOLES SHALL BE ADJUSTED TO GRADE BY THE METHOD OF ADJUSTING HEIGHT OF SUPPORTING WALLS AS NECESSARY AND RESETTING THE EXISTING FRAME IN A BID OF MORTAR OR CONCRETE. NO ADJUSTING RINGS ARE PERMITTED.

THE FOLLOWING ESTIMATED QUANTITY HAS BEEN INCLUDED IN THE GENERAL SUMMARY FOR USE AS DIRECTED BY THE ENGINEER.

ITEM 604 – MANHOLE, ADJUSTED TO GRADE AS PER PLAN	40	EACH

ITEM 604 – CATCH BASIN No. 2-3, AS PER PLAN
THE STANDARD CATCH BASIN NO. 2-3 SHALL BE MODIFIED AS SHOWN ON THE DETAIL ON SHEET NO. 21 .

ITEM SPECIAL – MISCELLANEOUS METAL
EXISTING (MANHOLE, CATCH BASIN, INLET, MONUMENT, ETC.) CASTINGS MAY PROVE TO BE UNSUITABLE FOR REUSE, AS DETERMINED BY THE ENGINEER. IT SHALL BE THE CONTRACTOR'S RESPONSIBILITY TO PROVIDE THE CASTINGS OF THE REQUIRED TYPE, SIZE, AND STRENGTH (HEAVY OR LIGHT DUTY) FOR THE PARTICULAR STRUCTURE IN QUESTION. ALL MATERIALS SHALL MEET ITEM 604 OF THE SPECIFICATIONS AND HAVE THE PRIOR APPROVAL OF THE ENGINEER.

IN ADDITION TO THE STRUCTURES TO BE ADJUSTED TO GRADE AS DESIGNATED ON THE PLANS, THE CONTRACTOR SHALL PROVIDE SUITABLE BICYCLE-SAFE GRATES MEETING THE REQUIREMENTS OF ITEM 604 OF THE SPECIFICATIONS FOR REPLACEMENT OF EXISTING NON-BICYCLE-SAFE GRATES, AT THE DIRECTION OF THE ENGINEER. THE CONTRACTORS WORK SHALL INCLUDE INSPECTION OF ALL EXISTING CATCH BASINS LOCATED IMMEDIATELY ADJACENT TO THE PROJECT FOR THE PURPOSE OF DETERMINING THE NEED FOR SAID REPLACEMENTS.

THE FOLLOWING ESTIMATED QUANTITY HAS BEEN CARRIED TO THE GENERAL SUMMARY FOR USE AS DIRECTED BY THE ENGINEER:

ITEM SPECIAL – MISCELLANEOUS METAL	20,000 LBS.

THE CONTRACTOR IS CAUTIONED TO USE EXTREME CARE IN THE REMOVAL, STORAGE AND REPLACEMENT OF ALL EXISTING CASTINGS. CASTINGS DAMAGED BY THE NEGLIGENCE OF THE CONTRACTOR, AS DETERMINED BY THE ENGINEER, SHALL BE REPLACED WITH THE PROPER NEW CASTINGS AT THE EXPENSE OF THE CONTRACTOR.

HOWARD NEEDLES TAMMEN & BERGENDOFF
ARCHITECTS ENGINEERS PLANNERS HNTB

MADE BY: PF DATE: 10/93
DRAWN BY: DJE DATE: 10/93
CHECKED BY: AHS DATE: 10/93
SCALE: —
11646\PLAN\GNOTES1.DWG

GENERAL NOTES

FHWA REGION	STATE	PROJECT	
5	OHIO		

6A / 412

CUYAHOGA COUNTY
CUY-6-14.99

MANHOLES ABANDONED
THE CASTINGS SHALL BE CAREFULLY REMOVED AND STORED WITHIN THE RIGHT-OF-WAY FOR SALVAGE BY CUYAHOGA COUNTY FORCES.

PAYMENT FOR ALL OF THE ABOVE SHALL BE INCLUDED IN THE UNIT PRICE BID FOR THE PERTINENT 202 ITEM.

12" CONDUIT TYPE C, AS PER PLAN
THE CONTRACTOR SHALL DRILL A HOLE THROUGH THE STRUCTURE WALL TO PLACE THE PROPOSED PIPE. THE HOLE SHALL ONLY BE AS LARGE AS NEEDED TO FIT THE SEWER THROUGH. THE MINIMUM DIAMETER OF THE HOLE SHALL BE 16" AND THE MAXIMUM DIAMETER SHALL BE 18". FILL THE VOID BETWEEN THE WALL AND THE PIPE WITH GROUT. APPROXIMATE LOCATIONS ARE SHOWN ON THE SEWER PROFILE SHEETS.

PIPE CONNECTIONS TO CORRUGATED STEEL STRUCTURES
CONNECTIONS OF PROPOSED LONGITUDINAL DRAINAGE TO CORRUGATED STEEL STRUCTURES SHALL BE BY MEANS OF A SHOP-FABRICATED OR FIELD-WELDED STUB ON THE STRUCTURE. THE STUB SHALL MEET THE REQUIREMENTS OF 707 AND HAVE A MINIMUM LENGTH OF TWO FEET AND A MINIMUM THICKNESS OF 0.064 INCHES.

LOCATION AND ELEVATION OF THE STUB ARE TO BE CONSIDERED APPROXIMATE AND MAY BE ADJUSTED BY THE ENGINEER TO AVOID CUTTING THROUGH JOINTS IN THE STRUCTURE.

THE FIELD-WELDED JOINT, IF USED, SHALL BE THOROUGHLY CLEANED AND REGALVANIZED OR OTHERWISE SUITABLY REPAIRED. WELDING SHALL MEET THE REQUIREMENTS OF 513.17.

A CONCRETE COLLAR, AS PER STANDARD CONSTRUCTION DRAWING MC-4, WILL BE REQUIRED TO CONNECT THE LONGITUDINAL DRAINAGE TO THE STUB WHEN PIPE OTHER THAN CORRUGATED STEEL IS PROVIDED FOR THE LONGITUDINAL DRAINAGE.

PAYMENT FOR CUTTING INTO THE STRUCTURE AND PROVIDING THE CONNECTION DESCRIBED SHALL BE INCLUDED IN THE UNIT PRICE BID FOR ITEM 603 OR 522.

EXISTING UNDERDRAINS
IT IS INTENDED NOT TO DISTURB THE EXISTING UNDERDRAINS DURING THE CURB AND PAVEMENT REMOVAL AND REPLACEMENT OPERATIONS, AS PER THE DETAILS SHOWN ON CONSTRUCTION DRAWING MD-1C, SHEET NO. 22. ANY EXISTING UNDERDRAIN DAMAGED DURING THE REMOVAL OF EXISTING CURB AND PAVEMENT DUE TO THE CARELESSNESS OF THE CONTRACTOR SHALL BE REMOVED AND REPLACED BY THE CONTRACTOR AT HIS OWN EXPENSE.

EXISTING UNDERDRAINS WHICH ARE, THOUGH NO FAULT OF THE CONTRACTOR, ADVERSELY AFFECTED BY THE CONSTRUCTION OF THIS IMPROVEMENT OR ARE FOUND TO BE OTHERWISE UNSUITABLE, SHALL BE REMOVED AND REPLACED, IN KIND, AT THE SAME TRENCH WIDTH AND DEPTH, UNLESS OTHERWISE SPECIFIED BY THE ENGINEER.

THE FOLLOWING ESTIMATED QUANTITY IS CARRIED TO THE GENERAL SUMMARY FOR USE AS DIRECTED BY THE ENGINEER.

ITEM 605 - 6" SHALLOW PIPE UNDERDRAIN 200 LIN. FT.

NONE OF THE ABOVE MATERIALS SHALL BE ORDERED BY THE CONTRACTOR UNTIL AUTHORIZED BY THE ENGINEER.

ITEM SPECIAL - PIPE CLEANOUT
THE EXISTING PIPES INDICATED ON SHEET 18 SHALL BE CLEANED OUT AS DIRECTED BY THE ENGINEER. THIS WORK SHALL CONSIST OF THE REMOVAL OF ALL MATERIAL FROM THE INSIDE OF THE EXISTING PIPE. THE MATERIAL REMOVED SHALL BE DISPOSED OF IN ACCORDANCE WITH THE REQUIREMENTS OF 203.05.

THE FOOTAGE TO BE PAID FOR SHALL BE THE ACTUAL NUMBER OF LINEAL FOOTAGE OF EXISTING PIPE CLEANED OUT AS DIRECTED BY THE ENGINEER.

THE FOOTAGE, AS PROVIDED ABOVE, SHALL BE PAID FOR AT THE CONTRACT UNIT PRICE BID PER LINEAR FOOT FOR "ITEM SPECIAL-PIPE CLEANOUT", WHICH PRICE AND PAYMENT SHALL CONSTITUTE FULL COMPENSATION FOR REMOVAL AND DISPOSAL OF ALL MATERIAL FOUND IN THE PIPE AND FURNISHING OF ALL LABOR, EQUIPMENT, TOOLS AND INCIDENTALS NECESSARY TO COMPLETE THIS ITEM.

PAVEMENT

PROFILE AND ALIGNMENT
THE PROPOSED PAVEMENT RESURFACING SHALL FOLLOW THE ALIGNMENT AND PROFILE OF THE EXISTING PAVEMENT. THE PROPOSED ASPHALT CONCRETE OVERLAY SHALL BE AS SHOWN ON THE TYPICAL SECTIONS.

ITEM 407 - TACK COAT
THE RATE OF APPLICATION OF ITEM 407 SHALL BE SUBJECT TO ADJUSTMENT AS DIRECTED BY THE ENGINEER PER 407.05. PLAN QUANTITIES INDICATE AN AVERAGE APPLICATION RATE OF 0.10 GAL. PER SQUARE YARD OF TACK COAT FOR ESTIMATING PURPOSES ONLY.

CONTRACTION JOINTS IN CONCRETE PAVEMENT OR BASE WIDENING
WHERE NEW CONCRETE IS PLACED ADJACENT TO EXISTING CONCRETE, OR WHEREVER NEW CONCRETE IS PLACED, THE MAXIMUM DISTANCE BETWEEN THE JOINTS IN THE NEW CONCRETE SHALL BE IN ACCORDANCE WITH STANDARD CONSTRUCTION DRAWING BP-2.2.

ITEM 305 - CONCRETE BASE, AS PER PLAN

THE SECOND SENTENCE IN 305.01(a) SHALL READ "LOAD TRANSFER DEVICES ARE REQUIRED AT ALL TRANSVERSE CONTRACTION, CONSTRUCTION, AND EXPANSION JOINTS."

DOWEL BASKET ASSEMBLIES

WHERE DOWEL BASKET ASSEMBLIES ARE USED BY THE CONTRACTOR, ALL SPACER WIRES (SHIPPING WIRES) SHALL BE REMOVED FROM THE BASKET ASSEMBLIES PRIOR TO PAVING. IT SHALL BE THE RESPONSIBILITY OF THE CONTRACTOR TO INSURE THE DOWEL BASKET ASSEMBLIES ARE STABLE AND HELD FIRMLY IN PLACE.

ITEM 451 - 9" REINFORCED CONCRETE PAVEMENT, AS PER PLAN

ALL REQUIREMENTS AS SPECIFIED UNDER THE CONSTRUCTION AND MATERIAL SPECIFICATIONS SHALL BE MET EXCEPT AS FOLLOWS:
451.12 SURFACE SMOOTHNESS
THE SURFACE SMOOTHNESS SHALL MATCH THE SMOOTHNESS AS SPECIFIED IN ITEM 305.01.

CONTRACTION AND/OR EXPANSION JOINTS

ALTHOUGH SPECIFIC LOCATIONS OF CERTAIN CONTRACTION AND EXPANSION JOINTS HAVE BEEN DETAILED ON THIS PLAN, NO WAIVER OF THE SPECIFICATIONS IS INTENDED. PROVISION OF EXPANSION JOINTS AT ALL MAJOR STRUCTURES AND THE MAXIMUM SPACING BETWEEN CONTRACTION JOINTS SHALL, IN ALL CASES, BE IN ACCORDANCE WITH STANDARD CONSTRUCTION DRAWING BP-2.2 AND THE SPECIFICATIONS.

WATER WORK

ITEM SPECIAL - MISCELLANEOUS METAL WORK

EXISTING WATER VALVES OR CASTINGS MAY PROVE TO BE UNSUITABLE FOR REUSE, AS DETERMINED BY THE ENGINEER. IT SHALL BE THE CONTRACTOR'S RESPONSIBILITY TO PROVIDE THE CASTINGS OF THE REQUIRED TYPE, SIZE AND STRENGTH (HEAVY OR LIGHT DUTY) FOR THE PARTICULAR ITEM IN QUESTION. ALL MATERIALS SHALL MEET ITEM 604 AND 638 OF THE SPECIFICATIONS AND HAVE THE PRIOR APPROVAL OF THE ENGINEER.

THE FOLLOWING ESTIMATED QUANTITIES HAVE BEEN CARRIED TOO THE GENERAL SUMMARY FOR USE AS DIRECTED BY THE ENGINEER.

ITEM SPECIAL - MISCELLANEOUS METAL WORK 3000 LBS.

ITEM SPECIAL - CUTTING-IN VALVE WITH VALVE BOX, COMPLETE

WORK INCLUDED
THE DIVISION OF WATER WILL SET THE TIME OF INSTALLATION AND THE CONTRACTOR WILL DO ALL PIPE CUTTING AND INSTALLING UNDER THE SUPERVISION OF THE DIVISION OF WATER AND HEAT. THE CONTRACTOR SHALL FURNISH AND HAUL TO THE PROPER LOCATION THE HUB VALVE AND VALVE BOX COMPLETE, STANDARD NO. 38 DRESSER COUPLING OR APPROVED SMITH BLAIR COUPLING OR APPROVED EQUAL, CAST IRON PIPE AND LEAD FOR THE INSTALLATION. THE CONTRACTOR SHALL EXCAVATE, PROVIDE SHEETING, AND BRACING AS NECESSARY, BACKFILL AND REPAVE AS NECESSARY. SEE SHEET 17 FOR DETAIL.

QUALITY OF VALVES
THE VALVES SHALL BE A.P. SMITH MANUFACTURING CO. OR APPROVED EQUAL AND SHALL COMPLY WITH THE REQUIREMENTS OF THE VALVES SPECIFICATIONS, IN SO FAR AS THEY APPLY.

PAYMENT
THE WORK INCLUDED IN THIS ITEM SHALL BE PAID FOR AT THE UNIT PRICE BID FOR EACH "ITEM SPECIAL - CUTTING-IN VALVE WITH VALVE BOX COMPLETE" CLASSIFIED AS TO SIZE. THE PRICE AND PAYMENT SHALL CONSTITUTE FULL COMPENSATION FOR PERFORMING ALL EXCAVATION, SHEETING, BRACING, BACKFILLING, REPAVING, FURNISHING AND INSTALLING THE CUTTING-IN VALVE AND THE FURNISHING OF ALL MATERIALS, LABOR, EQUIPMENT, TOOLS AND INCIDENTALS REQUIRED TO COMPLETE THIS ITEM OF WORK.

HOWARD NEEDLES TAMMEN & BERGENDOFF
ARCHITECTS ENGINEERS PLANNERS HNTB

MADE BY: PF DATE: 10/93
DRAWN BY: DJF DATE: 10/93
CHECKED BY: AHS DATE: 10/93
SCALE: -
11646\PLAN\GNOTES1.DWG

GENERAL NOTES

FHWA REGION	STATE	PROJECT	
5	OHIO		

6B
412

CUYAHOGA COUNTY
CUY-6-14.99

PRECONSTRUCTION PHOTOGRAPHS

DESCRIPTION.

PRIOR TO THE DELIVERY OF ANY PLANT, EQUIPMENT, MATERIALS OR SUPPLIES TO THE SITE OF ANY WORK, OR TO THE BEGINNING OF ANY OF THE CONSTRUCTION WORK, THE CONTRACTOR SHALL PROVIDE PRECONSTRUCTION PHOTOGRAPHY AS SPECIFIED BELOW FOR THE PURPOSE OF ESTABLISHING THE EXISTING CONDITIONS IN ALL OF THE AREAS, INCLUDING PUBLIC AND PRIVATE STRUCTURES AND BUILDINGS, ETC., LOCATED BELOW, ADJACENT TO AND IN THE VICINITY OF THE WORK

PRECONSTRUCTION PHOTOGRAPH SHALL CONSIST OF COLOR GROUND PHOTOGRAPH (INCLUDING STILL PHOTOGRAPHY, VIDEO AND AERIAL PHOTOGRAPHY).

STILL, VIDEO AND AERIAL PHOTOGRAPHY SHALL BE COMPILED BY PROFESSIONAL INDEPENDENT PHOTO GRAPHICAL COMPANIES ACTIVELY ENGAGED IN THE PERFORMANCE OF COLORED PHOTOGRAPHY OF SIMILAR NATURE ON SIMILAR TYPE PROJECTS FOR MUNICIPAL AND GOVERNMENTAL AGENCIES. THE NAME AND EXPERIENCE OF EACH COMPANY SHALL BE SUBMITTED TO THE ENGINEER FOR APPROVAL PRIOR TO ENGAGING IN THE WORK.

THE PRECONSTRUCTION PHOTOGRAPHS ARE INTENDED FOR USE AS EVIDENCE IN DOCUMENTING PRECONSTRUCTION CONDITIONS AND ASCERTAINING THE EXTENT OF ANY DAMAGE WHICH MAY OCCUR AS A RESULT OF THE CONTRACTOR'S OPERATIONS AND ARE FOR THE PROTECTION OF THE ADJACENT PROPERTY OWNERS, THE CONTRACTOR, THE DEPARTMENT AND THE DEPARTMENT AGENTS AND REPRESENTATIVES. THE RECORDS WILL PROVIDE A MEANS OF DETERMINING WHETHER AND TO WHAT EXTENT DAMAGE MAY HAVE OCCURRED AS A RESULT OF THE CONTRACTOR'S OPERATION.

GROUND PHOTOGRAPHY.

GROUND PHOTOGRAPHY SHALL CONSIST OF COLOR STILL PHOTOGRAPHY AND VIDEO TAPING OF SURFACE FEATURES TAKEN ALONG, WITHIN AND ADJACENT TO THE ENTIRE R.O.W., AND INCLUDING ALL WORK AND STORAGE AREAS AND ALL ACCESS ROADWAYS. PRIOR TO AUDIO-VIDEO TAPING OF THE PROJECT, ALL AREAS TO BE INVENTORIED SHALL BE INVESTIGATED AND VISUALLY DOCUMENTED WITH NOTATIONS; STILL COLORED PHOTOGRAPHY SHALL BE MADE OF ITEMS NOT READILY VISIBLE BY VIDEOTAPING METHODS.

STILL PHOTOGRAPHY.

STILL COLORED PHOTOGRAPHY SHALL BE TAKEN IN SUCH INSTANCES AS DIRECTED BY THE ENGINEER AS NECESSARY TO COMPLEMENT VIDEO PHOTOGRAPHY, WHERE VIDEO TAPING WILL NOT PROVIDE A CLEAR DISTINCTIVE VIEW OF EXISTING CONDITION.

PHOTOGRAPHS SHALL BE OF STANDARD COMMERCIAL QUALITY; COLORED, 8"X10" IN SIZE, AND ON SINGLE-WEIGHT GLOSSY PAPER. EACH PHOTOGRAPH SHALL SHOW AN INFORMATION BOX IN THE LOWER RIGHT-HAND CORNER, APPROXIMATELY 1-1/2" HIGH AND 3" WIDE, HAVING A WHITE BACKGROUND AND BLACK LETTERS. THE INFORMATION BOX SHALL BE INCORPORATED INTO THE PRINT BY A PHOTOGRAPHIC PROCESS AND SHALL NOT BE PASTED TO THE FINISHED PRINT.

THE FOLLOWING INFORMATION SHALL BE TYPED, NOT HANDWRITTEN, IN THE BOX:

_____ (CONTRACT NAME AND NO.) _____

_____ (CONTRACTOR'S NAME) _____

TIME _____ DATE _____

(INFORMATION REGARDING VIEW SUCH AS LOCATION, DIRECTION OF SIGHT AND SIGNIFICANT POINTS OF INTEREST.)

COVERAGE OF AUDIO-VIDEO TAPING.

SUCH COVERAGE SHALL INCLUDE, BUT NOT BE LIMITED TO ALL EXISTING BUILDINGS, INCLUDING FASCIAS AND ROOFS, INTERIORS, INCLUDING BASEMENTS, DRIVEWAYS, SIDEWALKS, CURBS, DITCHES, STREETS, LANDSCAPING, TREES, CULVERTS, RETAINING WALLS, FENCES, VISIBLE UTILITIES, NAME PLATES, PLAQUES, INTERIOR WALLS OF TUNNELS AND STATIONS, AND ALL STRUCTURES LOCATED ALONG, WITHIN AND ADJACENT TO THE R.O.W. AND WORK AREAS. OF PARTICULAR CONCERN ARE ANY EXISTING FAULTS, FRACTURES, DEFECTS, SETTLEMENT, LEAKAGE OR OTHER IMPERFECTIONS EXHIBITED BY THE ABOVE MENTIONED SURFACE FEATURES. AUDIO DESCRIPTION SHALL BE MADE SIMULTANEOUSLY WITH AND SUPPORT THE VIDEO COVERAGE.

EASEMENT AREAS SHALL BE RECORDED BY AUDIO-VIDEO TAPE FOR THE FULL WIDTH OF THE PERMANENT AND TEMPORARY EASEMENTS AND ALL OTHER ADJACENT AREAS LYING WITHIN, ALONG AND ADJACENT TO THE R.O.W. AND WORK AREAS, AND THE AREAS AS DIRECTED BY THE ENGINEER. THE SIZE AND LOCATIONS OF ALL AREAS TO BE TAPED WILL BE SUPPLIED BY THE ENGINEER.

THE CONTRACTOR SHALL FURNISH COLOR AUDIO-VIDEO TAPES OF ALL EXTERIOR SURFACES OF ALL BUILDINGS WITHIN, ALONG AND ADJACENT TO THE R.O.W. AND WORK AREAS. SUCH BUILDINGS MAY INCLUDE HOUSES, APARTMENTS, FACTORIES, WAREHOUSES, RETAIL STORES AND OTHER STRUCTURES. EXTERIOR BUILDING COVERAGE SHALL INCLUDE, BUT NOT BE LIMITED TO, WALLS, VISIBLE FOUNDATIONS, CHIMNEY, PORCHES, AND TRIM.

ELECTRONIC REQUIREMENTS.

AUDIO-VIDEO SYSTEM SHALL BE AN APPROVED TYPE VHS COMMERCIAL QUALITY SYSTEM; TAPES SHALL BE SONY NEW HIGH GRADE TYPE, MEMOREX, 3M OR EQUAL, AND MUST BE INTERCHANGEABLE WITH OTHER COMMERCIALLY AVAILABLE COLOR VIDEO VHS CASSETTE PLAYER/RECORDER. VIDEO OUTPUT FROM CAMERA(S) USED MUST BE CAPABLE OF PRODUCING NTSC-525 LINES/60 FIELD/S.

RESOLUTION IN THE Y CHANNEL, MINIMUM 500 TV LINES AT CENTER, UTILIZING A BIAS LIT BEAM SPLIT PRISM, IN COMBINATION WITH PLUMBICON PICK-UP TUBES, FOR OPTIMUM COLOR IMAGERY AND MINIMUM LAG THROUGH TEN (10) FOOT CANDLES, WITH GEOMETRIC DISTORTION NOT TO EXCEED 1.5% OF PICTURE HEIGHT AT ANY POINT IN THE PICTURE AREA.

LOCATION INFORMATION.

ALL TAPES (CASSETTES AND CASES) SHALL BE PROPERLY IDENTIFIED BY TAPE NUMBER, LOCATION, TIME, DATE AND PROJECT NAME IN A MANNER ACCEPTABLE TO THE ENGINEER AND THE DEPARTMENT. A RECORD OF THE CONTENTS OF EACH TAPE SHALL BE SUPPLIED ON A RUN SHEET IDENTIFYING EACH SEGMENT IN THE TAPE BY LOCATION, I.E., STREET, HOUSE NUMBER, VIEWING SIDE, TRAVELING DIRECTION, ENGINEERING STATIONING, AND ALL REFERENCED BY TAPE COUNTER NUMBERS.

A BRIEF REPORT AND INVENTORY OF ALL TAPES COMPLETED, REFERENCED BY LOCATION AND TAPE NUMBER, SHALL BE FURNISHED TO THE ENGINEER UPON COMPLETION OF THE WORK AND DELIVERY OF THE TAPES.

ALL VIDEO RECORDINGS SHALL BEGIN WITH THE DATE AND TIME OF RECORDING, THE PROJECT NAME, THE SHEET NUMBERS OR ENGINEERING STATIONING AS SHOWN ON THE PLANS, THE NAME OF THE STREET, BUILDING BEING TAPED, THE DIRECTION OF TRAVEL, AND THE VIEWING SIDE. THE DATE AND TIME SHALL APPEAR CONTINUOUSLY ON THE TAPE.

HOUSES AND BUILDINGS SHALL BE IDENTIFIED VISUALLY BY HOUSE OR BUILDING NUMBER, WHEN POSSIBLE, IN SUCH A MANNER THAT THE PROGRESS OF THE TAPING AND THE PROPOSED SYSTEM MAY BE LOCATED BY REFERENCE TO THE HOUSES AND BUILDINGS.

THE ENGINEERING STATIONING NUMBERS MUST BE CONTINUOUS AND CORRESPOND TO THE PROJECT STATIONING AND INCLUDE THE STANDARD ENGINEERING SYMBOLS (FOR EXAMPLE: ODOT STA: 137+38). THIS INFORMATION MUST APPEAR IN THE LOWER HALF OF THE VIEWING SCREEN. BELOW THE ENGINEERING STATIONING SHALL APPEAR THE NAME OF THE PROJECT, NAME OF THE AREA COVERED, DIRECTION OF TRAVEL, VIEWING SIDE, DATE AND TIME OF TAPING.

ALL TAPES SHALL BE ACCOMPANIED BY A NOTARIZED STATEMENT VERIFYING THE ORIGINAL UNEDITED QUALITY OF THE TAPES.

ENTERING PROPERTY.

IF IT BECOMES NECESSARY TO ENTER ONTO PRIVATE PROPERTY, NOTIFY THE OWNER OF SUCH PROPERTY AT LEAST 24 HOURS IN ADVANCE OF THE PLANNED ENTRY TO OBTAIN HIS PERMISSION TO DO SO. SHOULD THE OWNER OF THE PROPERTY REFUSE TO GIVE HIS PERMISSION FOR SAID ENTRY THE CONTRACTOR SHALL IMMEDIATELY NOTIFY THE ENGINEER.

THE CONTRACTOR IS ADVISED THAT HE SHALL NOT ENTER ANY PRIVATE PROPERTY BEFORE THE OWNER'S WRITTEN PERMISSION IS GRANTED TO DO SO OR THE ENGINEER NOTIFIES THE CONTRACTOR THAT HE HAS GAINED THE LEGAL RIGHT TO DO SO. THE CONTRACTOR SHALL BE HELD LIABLE FOR ENTRY MADE OTHER THAN STATED ABOVE.

AERIAL PHOTOGRAPHY.

AERIAL COLORED PHOTOGRAPHY SHALL BE TAKEN IN AREAS WHERE STILL AND VIDEO PHOTOGRAPH ARE INCAPABLE OF PROVIDING AREAS OF EXISTING CONDITIONS, SUCH AS ROOFS ETC. AERIAL PHOTOGRAPHY MAY ALSO INCLUDE AERIAL AUDIO-VIDEO TAPING.

OWNERSHIP OF PRECONSTRUCTION PHOTOGRAPHS.

ALL VIDEO TAPES AND NEGATIVES OF STILL AND AERIAL PHOTOGRAPHY PRODUCED WILL BECOME THE PERMANENT PROPERTY OF THE DEPARTMENT. THE CONTRACTOR SHALL DELIVER ALL TAPES AND NEGATIVES TO THE DEPARTMENT PRIOR TO THE BEGINNING OF ANY CONSTRUCTION WORK.

ANY PORTION OF THE TAPE COVERAGE, STILL PHOTOGRAPHY OR AERIAL PHOTOGRAPHY, DEEMED UNACCEPTABLE BY THE ENGINEER MUST BE REDONE BY THE CONTRACTOR AT NO ADDITIONAL CHARGE.

SITE RECORDING CONDITIONS.

ALL PHOTOGRAPHY AND TAPING SHALL BE DONE DURING TIMES OF GOOD VISIBILITY. NO OUTSIDE PHOTOGRAPHY AND TAPING SHALL BE DONE DURING PERIODS OF VISIBLE PRECIPITATION OR WHEN THE GROUND AREA IS COVERED WITH SNOW, LEAVES, OR DEBRIS UNLESS OTHERWISE AUTHORIZED BY THE ENGINEER.

IN ORDER TO PRODUCE THE PROPER DETAIL AND PERSPECTIVE, ADEQUATE AUXILIARY LIGHTING WILL BE REQUIRED TO FILL IN SHADOW AREAS CAUSED BY TREES, UTILITY POLES, ROAD SIGNS, OVERHANGS AND OTHER SUCH OBJECTS, AS WELL AS OTHER CONDITIONS REQUIRING ARTIFICIAL ILLUMINATION.

THE AVERAGE RATE OF SPEED IN THE GENERAL DIRECTION OF TRAVEL OF THE CONVEYANCE USED DURING VIDEO TAPING SHALL NOT EXCEED 48 FEET PER MINUTE. PARTING RATES AND ZOOM-IN ZOOM-OUT RATES SHALL BE CONTROLLED SUFFICIENTLY SUCH THAT PLAYBACK WILL PRODUCE ADEQUATE CLARITY OF THE OBJECTS BEING VIEWED.

WHEN CONVENTIONAL WHEELED VEHICLES ARE USED AS CONVEYANCES FOR THE TAPING, THE DISTANCES FROM THE CAMERA LENS TO THE GROUND SHALL NOT BE LESS THAN EIGHT (8) FEET TO INSURE PROPER PERSPECTIVE. IN INSTANCES WHERE TAPE COVERAGE WILL BE REQUIRED IN AREAS NOT ACCESSIBLE TO CONVENTIONAL WHEELED VEHICLES, SUCH COVERAGE SHALL BE OBTAINED BY WALKING OR BY SPECIAL CONVEYANCE APPROVED BY THE ENGINEER, BUT WITH THE SAME REQUIREMENTS FOR TAPE QUALITY AND CONTENT AS SPECIFIED HEREIN EXCEPT AS MAY BE SPECIFICALLY EXEMPTED BY THE ENGINEER.

BASIS OF PAYMENT.

THE TAKING AND PROVIDING PRECONSTRUCTION PHOTOGRAPHS WILL BE PAID FOR AT THE CONTRACT PRICE FOR:

ITEM	UNIT	DESCRIPTION
SPECIAL	LUMP	PRECONSTRUCTION PHOTOGRAPHS

HOWARD NEEDLES TAMMEN & BERGENDOFF
ARCHITECTS ENGINEERS PLANNERS
HNTB

MADE BY: KDI DATE: 1/94
DRAWN BY: MJG DATE: 6/94
CHECKED BY: PF DATE: 6/94
SCALE: -
11646\PLAN\GNOTES1.DWG

GENERAL SUMMARY

FHWA REGION	STATE	PROJECT	
REGION	OHIO		

7 / 412

QUANTITY CALCULATIONS
MADE BY PF DATE 4/11/94
CHECKED BY MJW DATE 4/12/94

CUYAHOGA COUNTY
CUY-6-14.99

ITEM	ITEM EXT.	GRAND TOTAL	UNIT	DESCRIPTION	AS PER PLAN REFERENCE SHT.#	SHEET NUMBER 6	6A	6B	9	10	11	12	13	14	15	17	19	20	20A	45
				ROADWAY																
201	11000	LUMP		CLEARING AND GRUBBING																
202	23000	5969	SQ. YD.	PAVEMENT REMOVED					405	1104	3009	344	1002	105						
202	23900	128	SQ. YD.	CONCRETE BASE REMOVED														128		
202	30000	7075	SQ. FT.	WALK REMOVED					170	556	1949									4400
202	30600	296	SQ. YD.	CONCRETE MEDIAN REMOVED							284					12				
202	32000	1025	LIN. FT.	CURB REMOVED					85	103	766								71	
202	35100	536	LIN. FT.	PIPE REMOVED, 24" AND UNDER						78	458									
202	58000	2	EACH	MANHOLE REMOVED													2			
202	58400	2	EACH	INLET ABANDONED													2			
202	58700	4	EACH	MANHOLE ABANDONED													4			
SPECIAL	20270100	947	LIN. FT.	PIPE CLEANOUT	6A												947			
203	12000	668	CU. YD.	EXCAVATION, NOT INCLUDING EMBANKMENT CONSTRUCTION						157	511									
203	20000	144	CU. YD.	EMBANKMENT							6				67				71	
203	50000	975	SQ. YD.	SUBGRADE COMPACTION						941		11	23							
604	38500	1	EACH	MONUMENT ASSEMBLY						1										
608	10000	10288	SQ. FT.	4" CONCRETE WALK					170	4058	1466			194						4400
608	98000	543	SQ. FT.	CONCRETE WALK, AS PER PLAN	14									543						
608	15000	204	SQ. FT.	8" CONCRETE WALK										204						
608	50000	2	EACH	CURB RAMP, TYPE 1						1	1									
608	51000	7	EACH	CURB RAMP, TYPE 2						1	5			1						
608	54001	30	SQ. FT.	CURB RAMP, TYPE 2, AS PER PLAN	14									30						
SPECIAL	69098400	LUMP		ROADWAY, MISC. : PRECONSTRUCTION PHOTOGRAPHS	6B			LUMP												
				EROSION CONTROL																
207	30000	200	LIN. FT.	FILTER FABRIC FENCE		200														
207	70000	200	EACH	STRAW OR HAY BALES		200														
659	10000	823	SQ. YD.	SEEDING AND MULCHING		500					54				269					
659	20000	0.1	TON	COMMERCIAL FERTILIZER		0.1														
659	35000	50	M. GAL.	WATER		50														
659	40000	50	M. SQ. FT.	MOWING		50														
				DRAINAGE																
603	01500	80	LIN. FT.	6" CONDUIT, TYPE F, 707.17 NON-PERFORATED, ASTM D 3034, SDR 35, SS931 OR SS944		80														
603	04400	394	LIN. FT.	12" CONDUIT, TYPE B													394			
603	04600	1152	LIN. FT.	12" CONDUIT, TYPE C									88				1064			
603	04601	55	LIN. FT.	12" CONDUIT, TYPE C, AS PER PLAN	6A												55			
603	05200	200	LIN. FT.	12" CONDUIT, TYPE F, 707.05 TYPE C													200			
603	06100	8	LIN. FT.	15" CONDUIT, TYPE C													8			
603	10400	8	LIN. FT.	24" CONDUIT, TYPE B													8			
604	00300	1	EACH	CATCH BASIN, CITY OF CLEVELAND, No. 1						1										
604	00400	2	EACH	CATCH BASIN, No. 3									2							
604	04901	24	EACH	CATCH BASIN, No. 2-3, AS PER PLAN	6,21												24			
604	09000	20	EACH	CATCH BASIN, ADJUSTED TO GRADE		20														
604	31500	22	EACH	MANHOLE No. 3									1				21			
604	32100	2	EACH	MANHOLE No. 5													2			
604	34501	41	EACH	MANHOLE ADJUSTED TO GRADE, AS PER PLAN	6	40											1			
SPECIAL	60450000	20000	LBS.	MISCELLANEOUS METAL	6	20000														
SPECIAL	60460000	12	LIN. FT.	TRENCH DRAIN	21												12			
605	11101	736	LIN. FT.	6" SHALLOW PIPE UNDERDRAIN, AS PER PLAN	22		200			78	458									

HOWARD NEEDLES TAMMEN & BERGENDOFF
ARCHITECTS ENGINEERS PLANNERS HNTB

MADE BY: PF DATE: 4/94
DRAWN BY: MJG DATE: 4/94
CHECKED BY: MJW DATE: 4/94
SCALE:
11646\PLAN\GENSUM2.DWG

GENERAL SUMMARY

QUANTITY CALCULATIONS
MADE BY PF/DAK DATE 4/11/94
CHECKED BY MJW DATE 4/12/94

FHWA REGION	STATE	PROJECT	
REGION	OHIO		

CUYAHOGA COUNTY
CUY-6-14.99

SHEET NUMBER 6A	9	10	11	12	13	14	15	17	20	20A	30	49	50	72	ITEM	ITEM EXT.	GRAND TOTAL	UNIT	DESCRIPTION	AS PER PLAN REFERENCE SHT.#
																			PAVEMENT	
														52	253	02000	52	CU. YD.	PAVEMENT REPAIR	
	4120	4814		3463	1928						72392				254	01000	86717	SQ. YD.	PAVEMENT PLANING, BITUMINOUS	
								12							255	10150	12	SQ. YD.	FULL DEPTH PAVEMENT REMOVAL AND RIGID REPLACEMENT CLASS MS	
						8				42					301	10002	50	CU. YD.	BITUMINOUS AGGREGATE BASE, AC-20	
	405	1976													305	12001	2381	SQ. YD.	8" CONCRETE BASE, AS PER PLAN	6A
									120						305	13001	120	SQ. YD.	9" CONCRETE BASE, AS PER PLAN	6A
				344	1002										305	15001	1346	SQ. YD.	11" CONCRETE BASE, AS PER PLAN	6A
		157	499												310	12000	656	CU. YD.	SUBBASE, TYPE 1, GRADING A	
							6				3519				402	20000	3525	CU. YD.	ASPHALT CONCRETE, AC-20	
							8			11	2513				404	20000	2532	CU. YD.	ASPHALT CONCRETE, AC-20	
						2									404	25000	2	CU. YD.	ASPHALT CONCRETE, AC-20 (DRIVEWAYS)	
	451	772	298	382	293					31	7239				407	10000	9466	GAL	TACK COAT	
	214	376	145	186	143										448	15000	1064	CU. YD.	ASPHALT CONCRETE, INTERMEDIATE COURSE, TYPE 2, AC-20	
	162	268	103	133	102										448	16000	768	CU. YD.	ASPHALT CONCRETE, SURFACE COURSE, TYPE 1, AC-20	
		941	2996												451	14001	3937	SQ. YD.	9" REINFORCED CONCRETE PAVEMENT, AS PER PLAN	6A
							134			74					609	10000	208	LIN. FT.	ASPHALT CONCRETE CURB, AC-20, TYPE 1	
	85	262	458			121									609	26000	926	LIN. FT.	CURB, TYPE 6	
			313												612	14001	313	SQ. YD.	6" CONCRETE TRAFFIC ISLAND, AS PER PLAN	17
			22					6							612	42001	28	SQ. YD.	CONCRETE MEDIAN, AS PER PLAN	16B, 17
																			WATER WORK	
					1										638	08702	1	EACH	4" CUTTING IN SLEEVE	
					1										SPECIAL	63823506	1	EACH	8" CUTTING IN VALVE WITH VALVE BOX, COMPLETE	6A, 17
					1										SPECIAL	63823604	1	EACH	12" CUTTING IN VALVE WITH VALVE BOX, COMPLETE	6A, 17
3000															SPECIAL	63825000	3000	LBS.	MISCELLANEOUS METAL WORK	6A
																			FOR ROADWAY LIGHTING, SEE SHEET 90.	
																			FOR DECORATIVE LIGHTING, SEE SHEET 98.	
																			TRAFFIC CONTROL	
												2.9			630	00000	2.9	CU. YD.	CONCRETE FOR ANCHOR BASE FOUNDATION	
										120					630	03100	120	LIN. FT.	GROUND MOUNTED SUPPORT, NO. 3 POST	
										29					630	04100	29	LIN. FT.	GROUND MOUNTED SUPPORT, NO. 4 POST	
										29					630	08100	29	LIN. FT.	ONE WAY SUPPORT, NO. 4 POST	
												1			630	11201	1	EACH	OVERHEAD SIGN SUPPORT, TYPE TC-16.20, DESIGN 12, 45' ARM, AS PER PLAN	45
												2			630	74500	2	EACH	OVERHEAD SIGN SUPPORT, MISC.: TRUSS MOUNTED, AS PER PLAN	45
												2			630	75001	2	EACH	SIGN ATTACHMENT ASSEMBLY, AS PER PLAN	45
												1			630	75701	1	EACH	SPAN WIRE SIGN SUPPORT, TYPE TC-17.10, DESIGN 7, AS PER PLAN	45
												10			630	79000	10	EACH	SIGN HANGER ASSEMBLY, SPAN WIRE	
												18			630	79101	18	EACH	SIGN HANGER ASSEMBLY, MAST ARM, AS PER PLAN	45
										50					630	79500	50	EACH	SIGN SUPPORT ASSEMBLY, POLE MOUNTED	
										4					630	79501	4	EACH	SIGN SUPPORT ASSEMBLY, POLE MOUNTED, AS PER PLAN "A"	45
										25		1			630	79501	26	EACH	SIGN SUPPORT ASSEMBLY, POLE MOUNTED, AS PER PLAN "B"	64A
										226					630	80100	226	SQ. FT.	SIGN, FLAT SHEET	
										24					630	80101	24	SQ. FT.	SIGN, FLAT SHEET, AS PER PLAN	45
										112		183			630	80102	295	SQ. FT.	SIGN, FLAT SHEET, TYPE G	
										102		202			630	80204	304	SQ. FT.	SIGN, EXTRUSHEET, TYPE G	
										4					630	80501	4	EACH	SIGN, DOUBLE FACED, STREET NAME, AS PER PLAN	45
										98					630	85000	98	EACH	REMOVAL OF GROUND MOUNTED SIGN AND STORAGE	
										8					630	85100	8	EACH	REMOVAL OF GROUND MOUNTED SIGN AND REERECTION	
										11					630	86002	11	EACH	REMOVAL OF GROUND MOUNTED POST SUPPORT AND DISPOSAL	
												22			630	87000	22	EACH	REMOVAL OF OVERHEAD MOUNTED SIGN AND STORAGE	
												5			630	87100	5	EACH	REMOVAL OF OVERHEAD MOUNTED SIGN AND REERECTION	
												4			630	89702	4	EACH	REMOVAL OF OVERHEAD SIGN SUPPORT AND DISPOSAL	
										1		8			630	97700	9	EACH	SIGNING, MISC.: STREET NAME SIGN, AS PER PLAN	45
										2					631	84000	2	EACH	SIGN SERVICE	
										2					631	92000	2	EACH	SIGN FLASHER ASSEMBLY	
										2					631	94420	2	EACH	REMOVAL MISC.: SIGN FLASHER ASSEMBLY	

HOWARD NEEDLES TAMMEN & BERGENDOFF
ARCHITECTS ENGINEERS PLANNERS HNTB

MADE BY: PF DATE: 4/94
DRAWN BY: MJG DATE: 4/94
CHECKED BY: MJW DATE: 4/94
SCALE:
11646\PLAN\GENSUM2.DWG (PLOT3)

GENERAL SUMMARY

QUANTITY CALCULATIONS
MADE BY DAK DATE 5/2/94
CHECKED BY JPR DATE 5/3/94

FHWA REGION	STATE	PROJECT	
REGION	OHIO		

CUYAHOGA COUNTY
CUY-6-14.99

8A / 412

SHEET NUMBER 32	46	49	50	53B	65	72	ITEM	ITEM EXT.	GRAND TOTAL	UNIT	DESCRIPTION	AS PER PLAN REFERENCE SHT.#
											TRAFFIC CONTROL (CONTINUED)	
				8.11		0.01	642	00202	8.12	MILE	LANE LINE, TYPE 2	
				3.44		0.01	642	00302	3.45	MILE	CENTER LINE, TYPE 2	
				401			642	00802	401	LIN. FT.	CURB MARKING, TYPE 2	
				142			642	00902	142	SQ. FT.	ISLAND MARKING, TYPE 2	
				7413			642	30000	7413	LIN. FT.	REMOVAL OF PAVEMENT MARKING	
				0.56		0.02	644	00100	0.58	MILE	EDGE LINE	
				0.29			644	00200	0.29	MILE	LANE LINE	
				8102		198	644	00400	8300	LIN. FT.	CHANNELIZING LINE	
				2049		138	644	00500	2187	LIN. FT.	STOP LINE	
				10580		86	644	00600	10666	LIN. FT.	CROSSWALK LINE	
				3295			644	00700	3295	LIN. FT.	TRANSVERSE LINE	
				80		2	644	01300	82	EACH	LANE ARROW	
				24			644	01400	24	EACH	WORD ON PAVEMENT, 72"	
				1431			644	01500	1431	LIN. FT.	DOTTED LINE 4"	
											TRAFFIC SIGNAL	
					980		625	25402	980	LIN. FT.	CONDUIT, 2", 713.07	
					2175		625	25500	2175	LIN. FT.	CONDUIT 3", 713.04	
					1398		625	29000	1398	LIN. FT.	TRENCH	
					688		625	29600	688	LIN. FT.	TRENCH IN PAVED AREA, TYPE B	
					33		625	31600	33	EACH	PULL BOX, MISC.: POLYMER CONCRETE	45
			1		20		625	32000	21	EACH	GROUND ROD	
					22		632	00301	22	EACH	VEHICULAR SIGNAL HEAD, 3 SECTION, 12" LENS, 1-WAY, AS PER PLAN	46
					1		632	00401	1	EACH	VEHICULAR SIGNAL HEAD, 4 SECTION, 12" LENS, 1-WAY, AS PER PLAN	46
					5		632	00501	5	EACH	VEHICULAR SIGNAL HEAD, 5 SECTION, 12" LENS, 1-WAY, AS PER PLAN	46
					22		632	20601	22	EACH	PEDESTRIAN SIGNAL HEAD, TYPE D2, AS PER PLAN	46
					11		632	26000	11	EACH	PEDESTRIAN PUSHBUTTON	
					12		632	27005	12	EACH	LOOP DETECTOR UNIT, AS PER PLAN	46
					19		632	27009	19	EACH	LOOP DETECTOR UNIT, DELAY AND EXTENSION TYPE, AS PER PLAN	46
600					2274		632	27500	2874	LIN. FT.	LOOP DETECTOR PAVEMENT CUTTING	
					1739		632	40200	1739	LIN. FT.	SIGNAL CABLE, 2 CONDUCTOR, NO. 14 AWG	
					3758		632	40500	3758	LIN. FT.	SIGNAL CABLE, 5 CONDUCTOR, NO. 14 AWG	
					3021		632	40700	3021	LIN. FT.	SIGNAL CABLE, 7 CONDUCTOR, NO. 14 AWG	
	600						632	53202	600	LIN. FT.	INTERCONNECT CABLE, 6 PAIR, NO. 19 AWG, SOLID, REA (PE-39)	46
					1		632	63000	1	EACH	PHONE DROP	46
1200					4187		632	64900	5387	LIN. FT.	LOOP DETECTOR WIRE, TYPE E	
					7306		632	65200	7306	LIN. FT.	LOOP DETECTOR LEAD-IN CABLE	
					267		632	68300	267	LIN. FT.	POWER CABLE, 3 CONDUCTOR, NO. 6 AWG	
					2		632	70400	2	EACH	CONDUIT RISER, 2" DIAMETER	
					25.2		632	72000	25.2	CU. YD.	CONCRETE FOR ANCHOR BASE FOUNDATION	
					1		632	80301	1	EACH	SIGNAL SUPPORT, TYPE TC-81.20, DESIGN 3, 35'ARM, AS PER PLAN	45
					1		632	80601	1	EACH	SIGNAL SUPPORT, TYPE TC-81.20, DESIGN 12, 45'ARM, AS PER PLAN	45
					1		632	81401	1	EACH	COMBINATION SIGNAL SUPPORT, TYPE TC-81.20, DESIGN 4, 32'ARM, AS PER PLAN	45
					2		632	81401	2	EACH	COMBINATION SIGNAL SUPPORT, TYPE TC-81.20, DESIGN 4, 38'ARM, AS PER PLAN	45
					1		632	81501	1	EACH	COMBINATION SIGNAL SUPPORT, TYPE TC-81.20, DESIGN 11, 45'ARM, AS PER PLAN	45
					1		632	81601	1	EACH	COMBINATION SIGNAL SUPPORT, TYPE TC-81.20, DESIGN 12, 45'ARM, AS PER PLAN	45
					3		632	81601	3	EACH	COMBINATION SIGNAL SUPPORT, TYPE TC-81.20, DESIGN 12, 48' ARM, AS PER PLAN	45
					1		632	82101	1	EACH	STRAIN POLE, TYPE TC-81.10, DESIGN 1, 13', AS PER PLAN	45 - 46
		2					632	89610	2	EACH	PEDESTAL, 9'	
					7		632	89901	7	EACH	PEDESTAL, 8' TRANSFORMER BASE, AS PER PLAN	45
					2		632	90100	2	EACH	REMOVAL OF TRAFFIC SIGNAL INSTALLATION	
					2		633	38001	2	EACH	CONTROLLER, ACTUATED, 8 PHASE, SOLID STATE DIGITAL MICROPROCESSOR, AS PER PLAN	45 - 46
					1		633	39001	1	EACH	CONTROLLER, MASTER, TRAFFIC RESPONSIVE, AS PER PLAN	46
					3.7		633	70000	3.7	CU. YD.	CONCRETE FOR CABINET FOUNDATION	
					11		633	70500	11	SQ. FT.	CONTROLLER WORK PAD	46

HOWARD NEEDLES TAMMEN & BERGENDOFF
ARCHITECTS ENGINEERS PLANNERS HNTB

MADE BY: MJW DATE: 5/94
DRAWN BY: MJW DATE: 5/94
CHECKED BY: JPR DATE: 5/94
SCALE:
116646\PLAN\GENSUM2.DWG (PLOT6)

GENERAL SUMMARY

QUANTITY CALCULATIONS
MADE BY DAK DATE 5/2/94
CHECKED BY JPR DATE 5/3/94

FHWA REGION	STATE	PROJECT	
REGION	OHIO		

CUYAHOGA COUNTY
CUY-6-14.99

8B
412

SHEET NUMBER 32	SHEET NUMBER 33	SHEET NUMBER 36A	ITEM	ITEM EXT.	GRAND TOTAL	UNIT	DESCRIPTION	AS PER PLAN REFERENCE SHT.#
							FOR STRUCTURES, SEE SHEET ~~19/270~~ 151.	
							MAINTENANCE OF TRAFFIC	
50			404	35000	50	CU. YD.	BITUMINOUS CONCRETE FOR MAINTAINING TRAFFIC	
200			410	12000	200	CU. YD.	TRAFFIC COMPACTED SURFACE, TYPE A OR B	
1000			608	21201	1,000	SQ. FT.	TEMPORARY BITUMINOUS WALK, AS PER PLAN	32
	2000		SPECIAL	61411100	2,000	HOUR	LAW ENFORCEMENT OFFICER WITH PATROL CAR	33
	30000		SPECIAL	61411200	30,000	HOUR	LAW ENFORCEMENT OFFICER	33
500			SPECIAL	61412500	500	SQ. FT.	REPLACEMENT SIGN	32
100			SPECIAL	61412600	100	EACH	REPLACEMENT DRUM	32
123			614	13300	123	EACH	BARRIER REFLECTOR, TYPE B	
123			614	13350	123	EACH	OBJECT MARKER	
		0.29	614	20100	0.29	MILE	TEMPORARY LANE LINE, CLASS 1, 642 PAINT	
		0.06	614	20300	0.06	MILE	TEMPORARY LANE LINE, CLASS 1, 740.05, TYPE C	
		0.09	614	21100	0.09	MILE	TEMPORARY CENTER LINE, CLASS 1, 642 PAINT	
		0.11	614	21300	0.11	MILE	TEMPORARY CENTER LINE, CLASS 1, 740.05, TYPE C	
		0.20	614	22100	0.20	MILE	TEMPORARY EDGE LINE, CLASS 1, 642 PAINT	
		2.61	614	22300	2.61	MILE	TEMPORARY EDGE LINE, CLASS 1, 740.05, TYPE C	
		333	614	23200	333	LIN. FT.	TEMPORARY CHANNELIZING LINE, CLASS 1, 642 PAINT	
		860	614	23600	860	LIN. FT.	TEMPORARY CHANNELIZING LINE, CLASS 1, 740.05, TYPE C	
		252	614	24600	252	LIN. FT.	TEMPORARY DOTTED LINE, CLASS 1, 740.05, TYPE C	
		310	614	25600	310	LIN. FT.	TEMPORARY TRANSVERSE LINE, CLASS 1, 740.05, TYPE C	
		130	614	26200	130	LIN. FT.	TEMPORARY STOP LINE, CLASS 1, 642 PAINT	
		300	614	26600	300	LIN. FT.	TEMPORARY STOP LINE, CLASS 1, 740.05, TYPE C	
		5	614	30200	5	EACH	TEMPORARY LANE ARROW, CLASS 1, 642 PAINT	
		10	614	30600	10	EACH	TEMPORARY LANE ARROW, CLASS 1, 740.05, TYPE C	
		1	614	31200	1	EACH	TEMPORARY WORD ON PAVEMENT, 72", CLASS 1, 642 PAINT	
		5	614	31600	5	EACH	TEMPORARY WORD ON PAVEMENT, 72", CLASS 1, 740.05 TYPE C	
LUMP			615	10000	LUMP		TEMPORARY ROAD	
118			615	25001	118	SQ. YD.	TEMPORARY PAVEMENT, CLASS B, AS PER PLAN	32
50			616	10000	50	M. GAL.	WATER	
5			616	20000	5	TON	CALCIUM CHLORIDE	
3065			622	40020	3,065	LIN. FT.	PORTABLE CONCRETE BARRIER, 32"	
			614	11000	LUMP		MAINTAINING TRAFFIC	
			619	15021	LUMP		FIELD OFFICE, TYPE C, AS PER PLAN	5-6
			623	10001	LUMP		CONSTRUCTION LAYOUT STAKES, AS PER PLAN	5
			624	10000	LUMP		MOBILIZATION	

HOWARD NEEDLES TAMMEN & BERGENDOFF
ARCHITECTS ENGINEERS PLANNERS HNTB

MADE BY: MJW DATE: 5/94
DRAWN BY: MJW DATE: 5/94
CHECKED BY: JPR DATE: 5/94
SCALE:
11646\PLAN\GENSUM2.DWG

FHWA REGION	STATE	PROJECT	
5	OHIO		

9/412

CUYAHOGA COUNTY
CUY-6-14.99

RESURFACING QUANTITIES

LOCATION	STATION TO STATION		SIZE			448 ASPHALT CONCRETE, SURFACE COURSE TYPE 1 AC-20	448 ASPHALT CONCRETE, INTERMEDIATE COURSE TYPE 2 AC-20	407 TACK COAT (0.1 GAL/ SQ. YD.)	254 PAVEMENT PLANING BITUMINOUS (3" AVERAGE DEPTH)
	FROM	TO	LENGTH LIN. FT.	WIDTH LIN. FT.	AREA SQ. FT.	CU. YD.	CU. YD.	GAL.	SQ. YD.
Detroit Ave.	93+00	93+57	57	76	4332	16.7	23.4	48	481.3
Detroit Ave. & W. 28th St.	93+57	94+51	94	Varies	** 8216	31.7	44.4	91	912.9
Detroit Ave.	94+51	96+98	247	48	11856	45.7	64	132	1317.3
Detroit Ave. & W. 26th St.	96+98	97+58	60	Varies	** 3456	13.3	18.7	38	384
Detroit Ave.	97+58	99+50	192	48	9216	35.6	49.8	102	1024.0
				TOTALS:		143	200	411	4120

** Area by planimeter

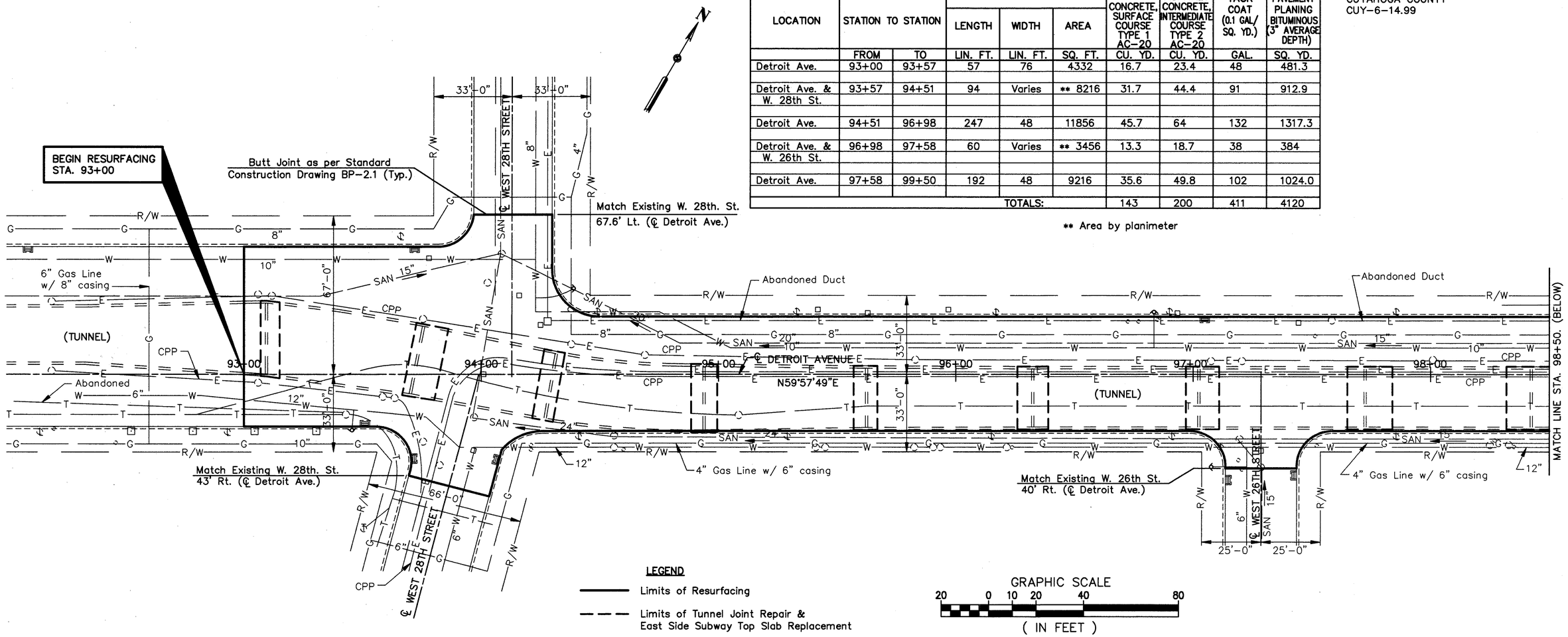

LEGEND

Limits of Resurfacing

Limits of Tunnel Joint Repair & East Side Subway Top Slab Replacement

GRAPHIC SCALE

20 0 10 20 40 80

(IN FEET)

EXPANSION JOINT REPAIR QUANTITY CALCULATIONS – DETROIT AVENUE TUNNEL

LOCATION*	STATION TO STATION		SIZE		202 PAVEMENT REMOVED	202 CURB REMOVED	202 WALK REMOVED	305 8" CONCRETE BASE AS PER PLAN	448 ASPHALT CONCRETE, SURFACE COURSE TYPE 1 AC-20	448 ASPHALT CONCRETE, INTERMEDIATE COURSE TYPE 2 AC-20	407 TACK COAT (0.1 GAL/ SQ. YD.)	608 4" CONCRETE WALK	609 CURB, TYPE 6
	FROM	TO	LENGTH LIN. FT.	WIDTH LIN. FT.	SQ. YD.	LIN. FT.	SQ. FT.	SQ. YD.	CU. YD.	CU. YD.	GAL.	SQ. FT.	LIN. FT.
CLOSURE													
WALL	93+09.56	93+15.06	5.5	31.1	19.0			19.0	1.0	0.7	2		
1–2	93+68.40	93+82.40	14	31.7	49.3			49.3	2.4	1.7	5		
2–3	94+24.72	94+33.72	9	30.5	30.5			30.5	1.5	1.1	3		
3–4	94+88.45	94+99.45	11	29.7	36.3	11	22	36.3	1.8	1.3	4	22	11
4–5	95+56.95	95+66.95	10	28.0	31.1	10	20	31.1	1.1	1.1	3	20	10
5–6	96+25.95	96+38.95	13	27.5	39.7	13	26	39.7	1.9	1.4	4	26	13
6–7	96+96.95	97+10.95	14	27.5	42.8			42.8	2.0	1.5	4		
7–8	97+64.95	97+83.95	19	27.5	58.1	19	38	58.1	2.7	1.9	6	38	19
8–9	98+31.95	98+52.95	21	27.5	64.2	21	42	64.2	3.2	2.2	6	42	21
9–10	99+06.95	99+17.95	11	27.5	33.6	11	22	33.6	1.7	1.2	3	22	11
				TOTALS:	405	85	170	405	19	14	40	170	85

* See Sheet 22/270 of Bridge Plans for wall numbering used.

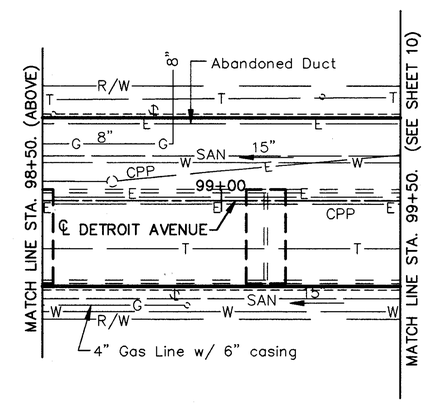

HOWARD NEEDLES TAMMEN & BERGENDOFF
ARCHITECTS ENGINEERS PLANNERS
HNTB

MADE BY: DGD DATE: 5/92
DRAWN BY: DJF DATE: 5/92
CHECKED BY: PF DATE: 5/92
SCALE: AS SHOWN
PLAN1.DWG

DETROIT AVE. STA. 92+00 TO STA. 99+50

FHWA REGION	STATE	PROJECT	
5	OHIO		

10 / 412

CUYAHOGA COUNTY
CUY-6-14.99

DRAINAGE QUANTITIES

REF. #	STATION TO STATION FROM	STATION TO STATION TO	604 ≠ CATCH BASIN CITY OF CLEVELAND NO. 1 EACH
CB-3	99+91		1
		TOTALS	1

≠ The cost will include the removal of the existing catch basin and replacement of the new catch basin. The outlet shall tie into the existing pipe outlet. From survey, the pipe outlet elevation is 666.76.

PAVEMENT REPLACEMENT & EXPANSION JOINT REPAIR QUANTITY CALCULATIONS – DETROIT AVENUE

LOCATION	STATION TO STATION FROM	STATION TO STATION TO	SIZE LENGTH LIN. FT.	SIZE WIDTH LIN. FT.	SIZE AREA SQ. FT.	202 PAVEMENT REMOVED SQ.YD.	203 SUBGRADE COMPACTION SQ.YD.	203 EXCAVATION NOT INCLUDING EMBANKMENT CONSTRUCTION CU.YD.	305 8" CONCRETE BASE, AS PER PLAN SQ.YD.	448 ASPHALT CONCRETE, INTERMEDIATE COURSE, TYPE 2, AC-20 CU.YD.	448 ASPHALT CONCRETE, SURFACE COURSE, TYPE 1, AC-20 CU.YD.	407 TACK COAT (0.1 GAL./SQ.YD.) GAL.	202 CURB REMOVED LIN FT	609 CURB, TYPE 6 LIN FT	451 9" REIN-FORCED CONCRETE PAVEMENT, AS PER PLAN SQ.YD.	310 6" SUBBASE TYPE 1, GRADING A CU.YD.
A	99+59.96	99+74.96	15.00	27.5	412.50	45.8			45.8	2.2	1.6	5	15	15		
B	99+74.96	99+91.96	17.00	32.3	549.10	61.0			61.0	3.0	2.1	6	▲	▲		
C	99+95.84	100+00.84	5.0	25.2	126.00	14.0			14.0	0.7	0.5	1	▲	▲		
E	100+27.96	100+31.96	4.0	27.2	108.80	12.1			12.1	0.6	0.4	1				
F	99+88.29	100+83.21	94.92	3.0	✱272.76	30.3			30.3	1.5	1.1	3				
	100+83.21	102+61.60			9734 *	–			1081.6	52.6	37.6	108				
	102+61.60	103+67.08			5248 *	–			583.1	28.3	20.2	58				
	103+67.08	103+92.44			1329 *	–			147.7	7.2	5.1	15				
G	100+83.21	103+66.90			8467 *	940.8	940.8	157		45.7	32.7	94			940.8	156.8
					TOTALS	1104	941	157	1976	142	101	291	15	15	941	157

NOTES:
1. For Legend See Sheet 9.
2. For Joint Repair Quantities on W 25th Street, See Sheet 12.
3. Existing scuppers to be removed and replaced. See sheet 18 for drainage plan.
4. See sheet 15 for section A–A.
5. See sheet 16 for section B–B.
6. Refer to lighting and signal plans for removal of poles and appertenances.
7. For Proposed Traffic Control and Signal Features see sheets 54–63, & 66–72.
8. For Proposed Lighting Features see sheets 88–96.
9. The Contractor is responsible for laying out the grade for the existing pavement. The proposed pavement shall match the existing grade except at proposed contoured areas. See sheet 228/270 for contours. Also see Construction Layout Stakes, as per plan, Note on Sheet 5.
10. For Section C–C see sheet 16B.

✱ Area calculated by subtracting 12sf out of overlap area of location E.

▲ See table below for quantities associated with areas B_1 and C_1

CURB RAMPS

REF #	STATION	SIDE	608 CURB RAMP, TYPE 1 EACH	608 CURB RAMP, TYPE 2 EACH
CR1	19+55 ℄ W. 25th	RT.	1	
CR1A	99+80 ℄ DETROIT	RT.		1
		TOTALS:	1	1

GRAPHIC SCALE
20 0 10 20 40 80
(IN FEET)

MONUMENT BOX

REF. #	SIDE	604 MONUMENT ASSEMBLY EACH
MB1	RT	1
	TOTAL	1

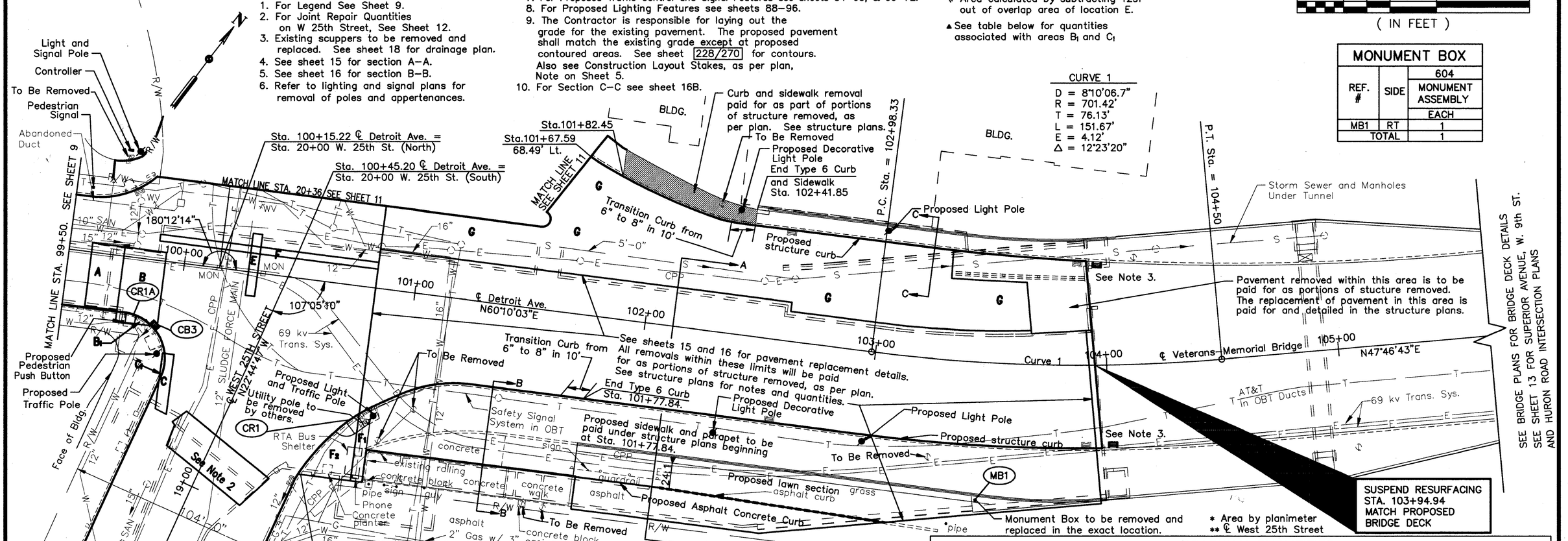

RESURFACING QUANTITIES

LOCATION	STATION TO STATION FROM	STATION TO STATION TO	SIZE LENGTH LIN. FT.	SIZE WIDTH LIN. FT.	SIZE AREA SQ. FT.	448 ASPHALT CONCRETE, SURFACE COURSE, TYPE 1, AC-20 CU. YD.	448 ASPHALT CONCRETE, INTERMEDIATE COURSE, TYPE 2, AC-20 CU. YD.	407 TACK COAT (0.1 GAL./SQ. YD.) GAL.	254 PAVEMENT PLANING BITUMINOUS SQ. YD.
Detroit Ave.	99+50	103+94.94	444.94	Varies	* 38355	148.0	207.2	426.2	4261.7
W. 25th St.	18+50	19+20	70	71	4970	19.2	26.8	55.2	552.2
					TOTALS:	167	234	481	4814

ROADWAY QUANTITIES

LOCATION	SIDE	STATION TO STATION FROM	STATION TO STATION TO	SIZE LENGTH LIN. FT.	SIZE WIDTH LIN. FT.	SIZE AREA SQ. FT.	608 4" CONCRETE WALK SQ.FT.	609 CURB, TYPE 6 LIN. FT.	202 WALK REMOVED SQ.FT.	202 CURB REMOVED LIN. FT.	202 PIPE REMOVED 24" AND UNDER LIN. FT.	605 6" SHALLOW PIPE UNDERDRAIN LIN. FT.
B_1	RT	99+74.96	99+91.96			* 43.7	43.7	20	43.7	20		
Detroit Ave.	LT	101+67.59	102+41.85	74.3	Varies	686.8	686.8	77.5	138.2	16	77.5	77.5
F_2	RT	19+24 **	100+83.21	Varies	Varies	* 367.7	367.7	37.6	367.7	37.6		
Detroit Ave.	RT	100+83.21	101+77.84	97.7				97.7				
F_1	RT	100+83.21	100+88.21			* 153.9	153.9					
C_1	LT	19+36 **	19+48 **			* 6.4	6.4	14	6.4	14		
Detroit Ave.	RT	100+88.21	101+77.84			*2799.2	2799.2					
						TOTALS	4058	247	556	88	78	78

HOWARD NEEDLES TAMMEN & BERGENDOFF
ARCHITECTS ENGINEERS PLANNERS
HNTB

MADE BY: DGD DATE: 5/92
DRAWN BY: DJF DATE: 5/92
CHECKED BY: PF DATE: 5/92
SCALE: AS SHOWN.
11646\PLAN\PLAN2.DWG

DETROIT AVE. & SUPERIOR BRIDGE STA. 99+50 TO STA. 106+00

FHWA REGION	STATE	PROJECT	
5	OHIO		

11
412

CUYAHOGA COUNTY
CUY-6-14.99

MEDIAN REPLACEMENT QUANTITIES

REF. NO.	STATION TO STATION		SIDE	202 CURB REMOVED	202 CONCRETE MEDIAN REMOVED	203 EXC. NOT INCLUDING EMB. CONSTR.	612 6" CONCRETE TRAFFIC ISLAND A.P.P.
				LIN FT	SQ YD	CU. YD.	SQ YD
M1	22+01.5	22+40.6	LT.	115	73.1	2.9	79.3
M2	20+43.7	20+81.2	RT.		18.0	0.7	18.0
M3	20+36	20+75	RT.	193	192.2	8.0	215.9
			TOTALS:	308	283	12	313

CURB, SIDEWALK & UNDERDRAIN REPLACEMENT QUANTITIES

STATION TO STATION		SIDE	202 CURB REMOVED	202 WALK REMOVED	202 PIPE REMOVED 24" AND UNDER	203 EMBANK-MENT	605 6" SHALLOW PIPE UNDER-DRAIN	608 CONCRETE WALK	609 CURB TYPE, 6	659 SEEDING AND MULCHING
			LIN FT	SQ. FT.	LIN. FT.	CU. YD.	LIN. FT.	SQ. FT.	LIN. FT.	SQ YD
20+36	21+44	LT.		869.9				869.9		
20+73	21+10	RT.		550.5				550.5		
21+70	22+30	RT.		482.9		5.9				53.7
21+45	21+52	RT.		45.6				45.6		
20+36	22+08	LT.	205		205		205		205	
20+73	21+10	RT.	65		65		65		65	
21+45	22+30	RT.	140		140		140		140	
22+63	22+78	LT.	48		48		48		48	
TOTALS:			458	1949	458	6	458	1466	458	54

* ITEM 612 CONCRETE MEDIAN SHALL BE CONSTRUCTED FROM STA. 22+37 TO STA. 21+83 AND SHALL BE CONCENTRIC TO THE SOUTH CURB LINE.

CURB RAMPS

REF #	STATION	SIDE	608 CURB RAMP, TYPE 1	608 CURB RAMP, TYPE 2
			EACH	EACH
CR2	20+42	RT.		1
CR3	20+63	RT.		1
CR4	21+00	RT.	1	
CR5	21+47	RT.		1
CR6	100+82≠	RT.		1
CR7	20+42	LT.		1
		TOTALS:	1	5

≠ ℄ DETROIT AVE.

≠ ℄ DETROIT AVE.

BARRIER QUANTITIES

LOCATION	STATION TO STATION		SIDE	202 CONCRETE MEDIAN REMOVED	612 CONCRETE MEDIAN, AS PER PLAN
	FROM	TO		SQ. YD.	SQ. YD.
W. 25th St.	22+36	22+37	LT.	1	
W. 25th St.	21+83	22+37	LT.		22
			TOTALS:	1	22

PAVEMENT QUANTITIES

LOCATION	STATION TO STATION		SIZE			202 PAVEMENT REMOVED	203 EXC. NOT INCLUDING EMB. CONSTR.	310 SUBBASE TYPE 1, GRADING A	407 TACK COAT (0.10 GAL/ SQ. YD.)	448 ASPHALT CONCRETE, SURFACE COURSE, TYPE 1, AC-20	448 ASPHALT CONCRETE, INTERMED. COURSE, TYPE 2, AC-20	451 9" REINF. CONCRETE PAVEMENT AS PER PLAN
					AREA							
	FROM	TO			SQ. FT.	SQ. YD.	CU. YD.	CU. YD.	GAL.	CU. YD.	CU. YD.	SQ. YD.
W. 25th St.	20+36	22+78			** 26960		499.3	499.3				2995.5
W. 25th St.	20+36	22+78			** 26792				297.7	103.4	144.7	
W. 25th St.	20+36	22+78			** 27077	3008.6						
					TOTALS:	3009	499	499	298	103	145	2996

** AREA BY PLANIMETER
(SUBTRACTING OUT AREA OF MEDIANS)

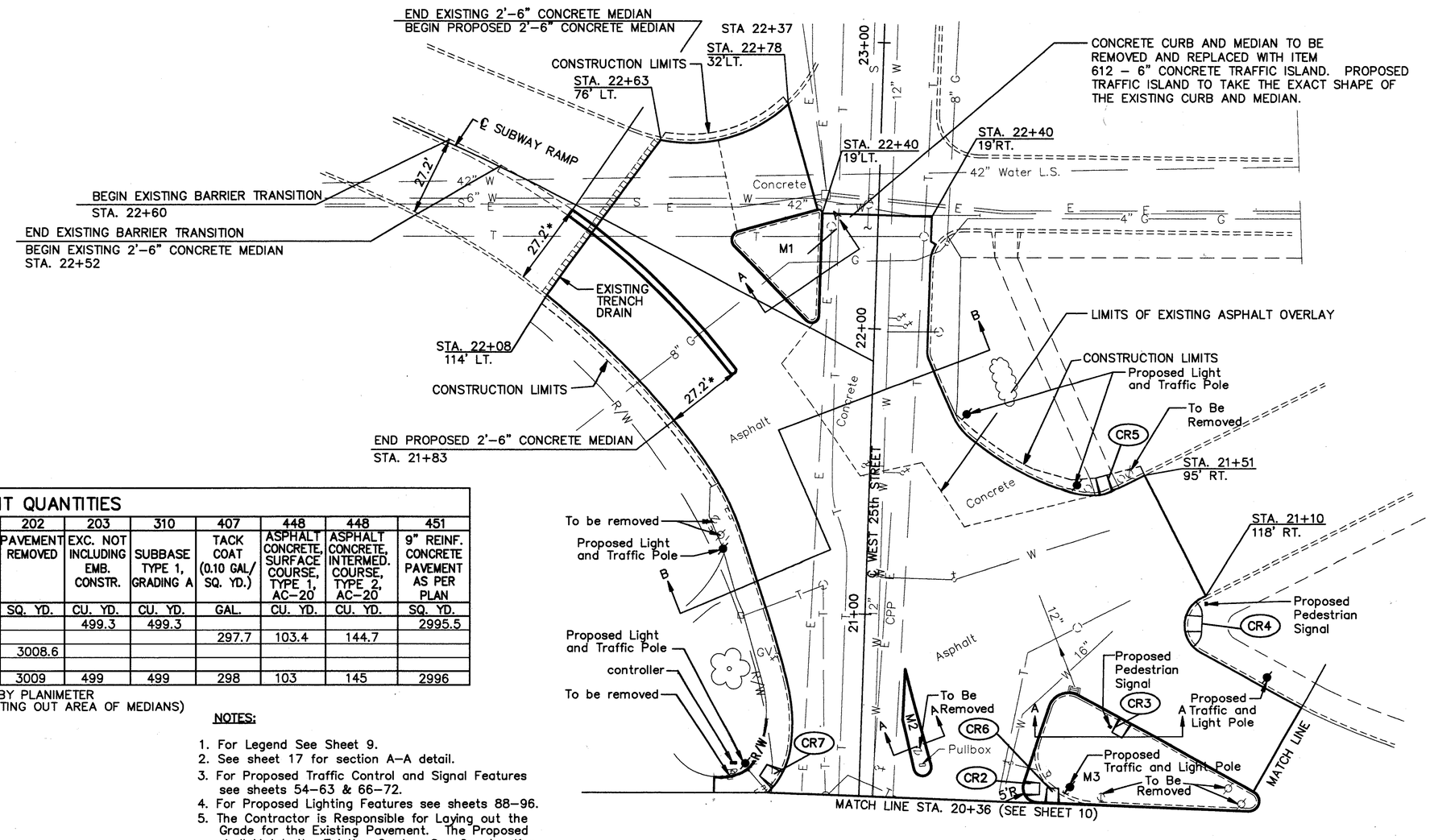

GRAPHIC SCALE
20 0 10 20 40 80
(IN FEET)

NOTES:

1. For Legend See Sheet 9.
2. See sheet 17 for section A-A detail.
3. For Proposed Traffic Control and Signal Features see sheets 54-63 & 66-72.
4. For Proposed Lighting Features see sheets 88-96.
5. The Contractor is Responsible for Laying out the Grade for the Existing Pavement. The Proposed shall Match the Existing Grade. See Construction Layout Stakes, as per plan, Note on sheet 5.
6. See sheet 16B for Section B-B detail.
7. For Concrete Median Detail at Subway Ramp see sheet 16B.

HOWARD NEEDLES TAMMEN & BERGENDOFF
ARCHITECTS ENGINEERS PLANNERS
HNTB

MADE BY: MJW DATE: 11/93
DRAWN BY: MJW DATE: 11/93
CHECKED BY: PF DATE: 12/93
SCALE: AS SHOWN
PLAN2.DWG

SUBWAY RAMP & W. 25th STREET

FHWA REGION	STATE	PROJECT	
5	OHIO		

12/412

CUYAHOGA COUNTY
CUY-6-14.99

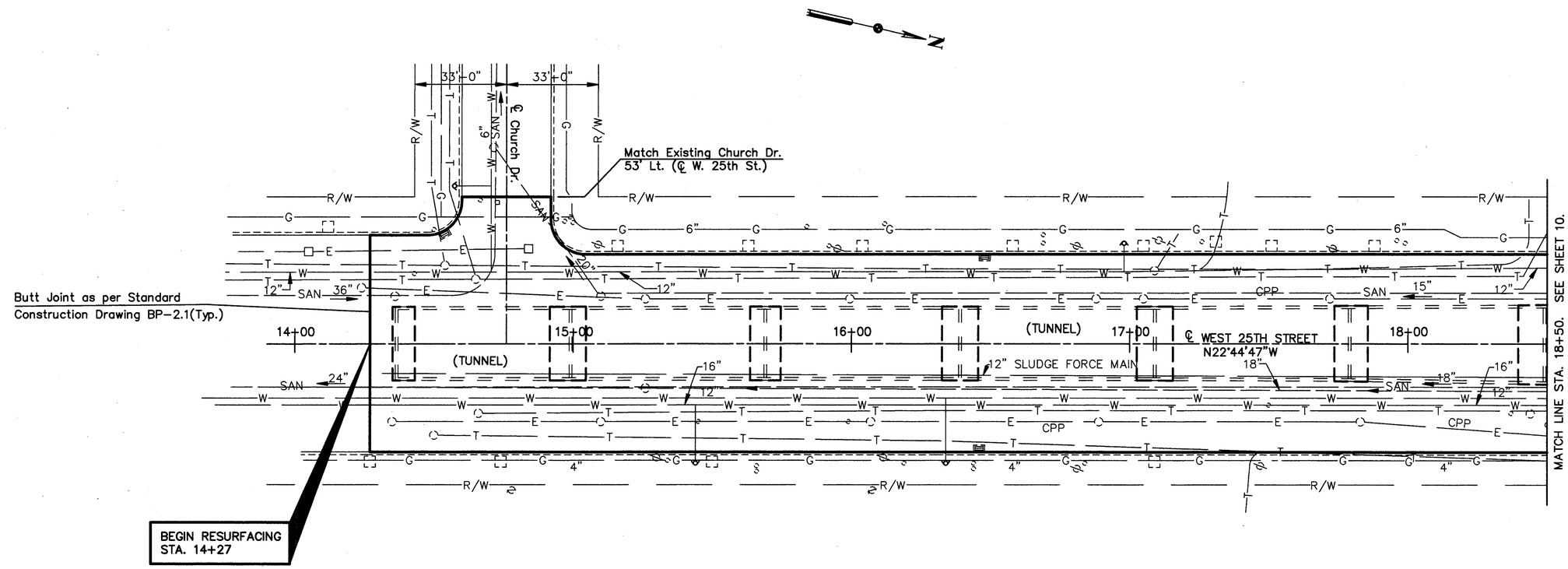

NOTE:
– For Legend See Sheet 9.

RESURFACING QUANTITIES

LOCATION	STATION TO STATION		SIZE			448 ASPHALT CONCRETE, SURFACE COURSE TYPE 1 AC-20	448 ASPHALT CONCRETE, INTERMEDIATE COURSE, TYPE 2 AC-20	407 TACK COAT (0.1 GAL/ SQ. YD.)	254 PAVEMENT PLANING BITUMINOUS
			LENGTH	WIDTH	AREA				
	FROM	TO	LIN. FT.	LIN. FT.	SQ. FT.	CU. YD.	CU. YD.	GAL.	SQ. YD.
W. 25th St.	14+25	15+03	78	Varies	≠ 6522	25.2	35.2	73	724.7
W. 25th St.	15+03	18+50	347	71	24637	95.1	133.1	274	2737.4
TOTALS:						121	169	347	3463

≠ Area by planimeter

EXPANSION JOINT REPAIR QUANTITY CALCULATIONS – WEST 25TH STREET TUNNEL

LOCATION*	STATION TO STATION		SIZE		202 PAVEMENT REMOVED	203 SUBGRADE COMPACTION	305 11" CONCRETE BASE AS PER PLAN	448 ASPHALT CONCRETE, INTERMEDIATE COURSE, TYPE 2 AC-20	448 ASPHALT CONCRETE, SURFACE COURSE TYPE 1 AC-20	407 TACK COAT (0.1 GAL/ SQ. YD.)
			LENGTH	WIDTH						
	FROM	TO	LIN. FT.	LIN. FT.	SQ. YD.	SQ. YD.	SQ. YD.	CU. YD.	CU. YD.	GAL.
CLOSURE										
WALL	14+36.64	14+43.14	6.5	27.5	19.9	0.8	19.9	0.9	0.7	2
11–12	14+91.64	15+04.64	13	27.5	39.7	1.4	39.7	2.0	1.4	4
12–13	15+63.64	15+74.64	11	27.5	33.6	1.2	33.6	1.7	1.1	3
13–14	16+32.64	16+45.64	13	27.5	39.7	1.4	39.7	2.0	1.4	4
14–15	17+02.64	17+15.64	13	27.5	39.7	1.4	39.7	2.0	1.4	4
15–16	17+73.64	17+85.64	12	28.1	37.5	1.3	37.5	1.9	1.3	4
16–17	18+39.64	18+54.64	15	29.4	49.0	1.6	49.0	2.4	1.8	5
17–WEST	19+06.04	19+23.04	17	45.0	≠ 84.2	1.9	≠ 84.2	4.1	2.9	9
STA.										
				TOTALS	344	11	344	17	12	35

* See Sheet 22/270 of Bridge Plans for numbering used.

≠ Area By Perimeter.

GRAPHIC SCALE
20 0 10 20 40 80
(IN FEET)

HOWARD NEEDLES TAMMEN & BERGENDOFF
ARCHITECTS ENGINEERS PLANNERS HNTB

MADE BY: DGD DATE: 5/92
DRAWN BY: DJF DATE: 5/92
CHECKED BY: PF DATE: 5/92
SCALE: AS SHOWN
PLAN3.DWG

W. 25TH ST. STA. 14+00 TO STA. 18+50

FHWA REGION	STATE	PROJECT	
5	OHIO		

CUYAHOGA COUNTY
CUY-6-14.99

13
412

RESURFACING QUANTITIES

LOCATION	STATION TO STATION		SIZE			448	448	407	254
			LENGTH	WIDTH	AREA	ASPHALT CONCRETE, SURFACE COURSE TYPE 1, AC-20	ASPHALT CONCRETE, INTERMED. COURSE TYPE 2, AC-20	TACK COAT (0.10 GAL./ SQ. YD.)	PAVEMENT PLANING BITUMINOUS
	FROM	TO	LIN. FT.	LIN. FT.	SQ. FT.	CU. YD.	CU. YD.	GAL.	SQ. YD.
Superior Ave.	130+92.24	0+80	Varies	Varies	17351 *	66.9	93.7	192.8	1927.9
					TOTALS:	67	94	193	1928

* Area by planimeter

CURVE 1
D = 129° 21' 00.05"
R = 44.30'
L = 20.64
T = 10.51'
E = 1.23'
Δ = 26° 41' 46.08"

CURVE 2
D = 98° 30' 40.09"
R = 7.00'
L = 15.79'
T = 14.75'
E = 9.33'
Δ = 129° 13' 13.41"

POINT A
P.C. STA. 130+92.24
44.00' LT.

POINT B
P.C.C. STA. 131+12.14
48.72' LT.

POINT C
P.T. STA. 131+11.85
61.37' LT.

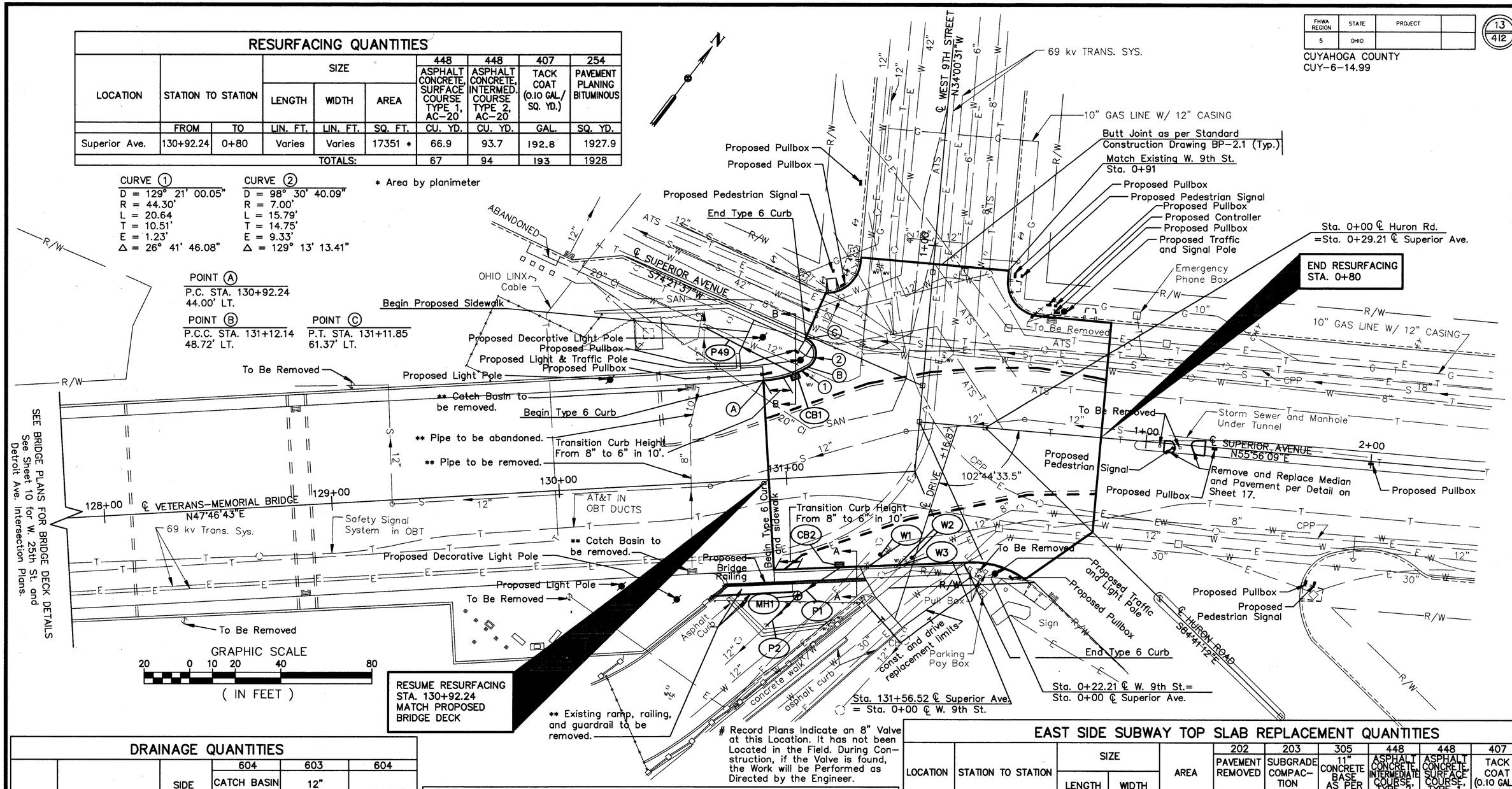

Record Plans Indicate an 8" Valve at this Location. It has not been Located in the Field. During Construction, if the Valve is found, the Work will be Performed as Directed by the Engineer.

DRAINAGE QUANTITIES

REF #	STATION TO STATION		SIDE	604 CATCH BASIN NO. 3	603 12" CONDUIT, TYPE C	604 MANHOLE NO. 3
	FROM	TO		EACH	LIN FT	EACH
CB1	131+06		LT	1		
CB2	131+21		RT	1		
P1	131+02	131+21	RT		22	
MH1	131+02		RT			1
P2	131+02	130+87	RT		20	
P49	130+67	131+06	LT		46	
	TOTALS:			2	88	1

WATER WORKS (See Note 5)

REF. NO.	LOCATION	STATION	SIDE	638 12-INCH CUTTING-IN VALVE, WITH VALVE BOX, COMPLETE	638 # 8-INCH CUTTING-IN VALVE, WITH VALVE BOX, COMPLETE	638 4-INCH CUTTING-IN SLEEVE
				EACH	EACH	EACH
W1	℄ Superior Ave.	131+33	RT.	1		
W2	℄ Superior Ave.	131+49	RT.		1	
W3	℄ Superior Ave.	131+46	RT.			1
			TOTALS:	1	1	1

EAST SIDE SUBWAY TOP SLAB REPLACEMENT QUANTITIES

LOCATION	STATION TO STATION		SIZE		AREA	202 PAVEMENT REMOVED	203 SUBGRADE COMPACTION	305 11" CONCRETE BASE AS PER PLAN	448 ASPHALT CONCRETE, INTERMEDIATE COURSE, TYPE 1, AC-20	448 ASPHALT CONCRETE, SURFACE COURSE, TYPE 1, AC-20	407 TACK COAT (0.10 GAL./ SQ. YD.)
	FROM	TO	LENGTH LIN. FT.	WIDTH LIN. FT.	SQ. FT.	SQ. YD.	SQ. YD.	SQ. YD.	CU. YD.	CU. YD.	GAL.
EAST SIDE SUBWAY	130+92.24	0+80	VARIES	VARIES	* 9022	1002.4	23.3	1002.4	48.7	34.8	100.2
					TOTALS:	1002	23	1002	49	35	100

* Area By Planimeter

NOTES:
1. For Legend See Sheet 9.
2. For Additional Roadway and Driveway Quantities, See Sheet 14.
3. For Section A-A & B-B Details, See Sheet 14.
4. For Median Replacement Detail, See Sheet 17.
5. For Water Works Detail, See Sheet 17.
6. For Sewer Profiles, See Sheets 23-26.
7. For Proposed Traffic Control and Signal Features see sheets 54-63, 66-72.
8. For Proposed Lighting Features see sheets 88-96.
9. For Drive Typical Section & Profile, see sheet 14.

** Paid for as part of portions of structure removed, as per plan. See structure plans.

HOWARD NEEDLES TAMMEN & BERGENDOFF
ARCHITECTS ENGINEERS PLANNERS HNTB

MADE BY: DGD DATE: 5/92
DRAWN BY: DJE DATE: 5/92
CHECKED BY: RF DATE: 5/92
SCALE: AS SHOWN
11646\PLAN\PLAN4.DWG

VETERANS-MEMORIAL BRIDGE & SUPERIOR AVE. STA. 127+50 TO SUPERIOR AVE. STA. 2+50

MISCELLANEOUS DETAILS

FHWA REGION	STATE	PROJECT	
5	OHIO		

CUYAHOGA COUNTY
CUY-6-14.99

GRAPHIC SCALE
4 0 2 4 8 16
(IN FEET)

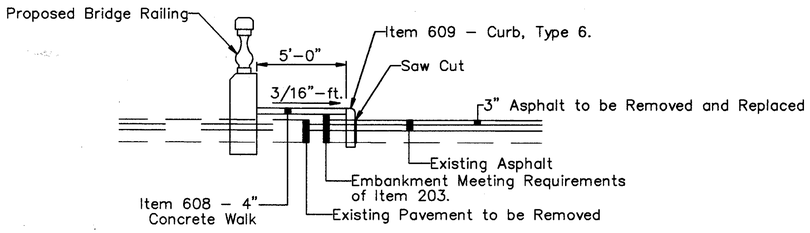

SECTION A–A
4" CONCRETE WALK

SUPERIOR AVENUE
Sta. 130+92.24 to Sta. 131+31 RT.

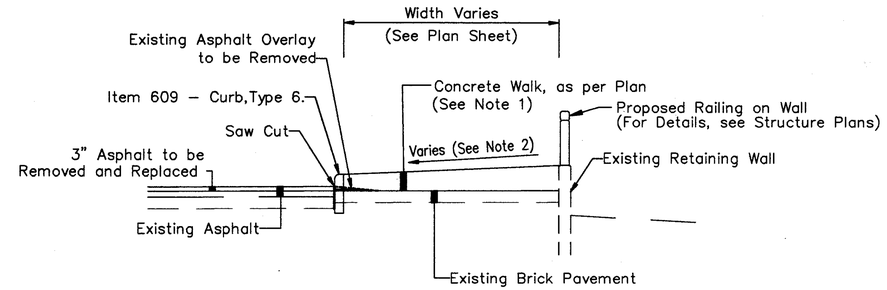

SECTION B–B
CONCRETE WALK, AS PER PLAN

ROADWAY QUANTITIES

LOCATION	STATION FROM	STATION TO	SIDE	LENGTH	WIDTH	AREA	202 PAVEMENT REMOVED	301 BITUMINOUS AGGREGATE BASE, AC-20 (DRIVEWAYS)	404 ASPHALT CONCRETE, AC-20 (DRIVEWAYS)	608 4" CONCRETE WALK	608 8" CONCRETE WALK	608 CONCRETE WALK, AS PER PLAN	608 CURB RAMP TYPE II	608 ** CURB RAMP TYPE II, AS PER PLAN	609 CURB TYPE 6
				LIN.FT.	LIN.FT.	SQ.FT.	SQ.YD.	CU.YD.	CU.YD.	SQ.FT.	SQ.FT.	SQ.FT.	EACH	SQ.FT.	LIN.FT.
SUPERIOR	130+66	131+29	RT	62.5	–	–									
	131+22	131+28	LT											30	
	130+83	131+16	LT			543 *						543			
	130+92.24	131+31	RT	38.8	5.0	194	19.4			194					
	130+92.24	131+16	LT												36
	130+92.24	0+26	RT												85
	131+14	–	LT										1		
	131+31	0+29	RT			772 *	85.8	8.3	2.2		204				
TOTALS:							105	8	2	194	204	543	1	30	121

* AREA BY PLANIMETER.

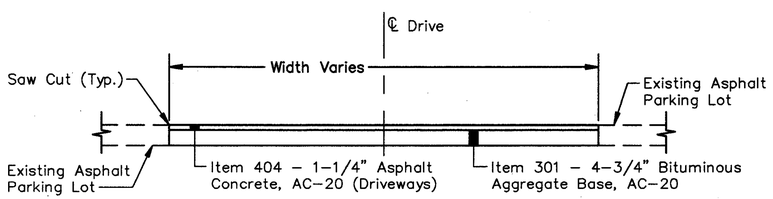

DRIVE TYPICAL SECTION
Drive @ Sta. 0+16.87 (Right), Superior Ave. from back of 8" Concrete Walk to Match Existing Location.
NOT TO SCALE

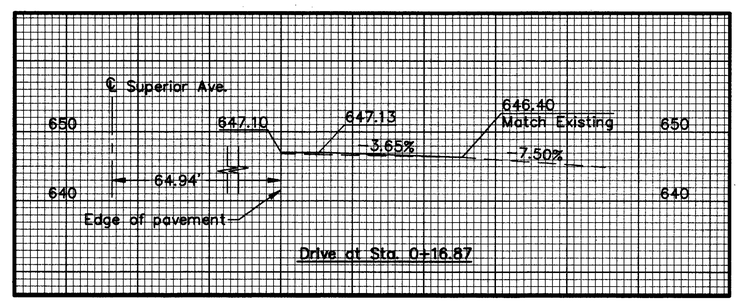

NOTES:
1. For locations of sections A–A and B–B, see sheet 13.
2. The concrete walk thickness and slope shall vary to match the top of the proposed curb, type 6, and the top of the existing retaining wall.

**** The curb ramp shall be constructed using the brick material that surrounds the curb ramp and shall be approved by the engineer. All other details shall match standard construction drawing BP-7.1.**

HOWARD NEEDLES TAMMEN & BERGENDOFF
ARCHITECTS ENGINEERS PLANNERS HNTB

MADE BY: M.J.W. DATE: 12/93
DRAWN BY: M.J.G. DATE: 12/93
CHECKED BY: P.F. DATE: 12/93
SCALE: AS SHOWN
11646\PLAN\WALKDET.DWG

MISCELLANEOUS DETAILS

FHWA REGION	STATE	PROJECT	
5	OHIO		

15/412

CUYAHOGA COUNTY
CUY-6-14.99

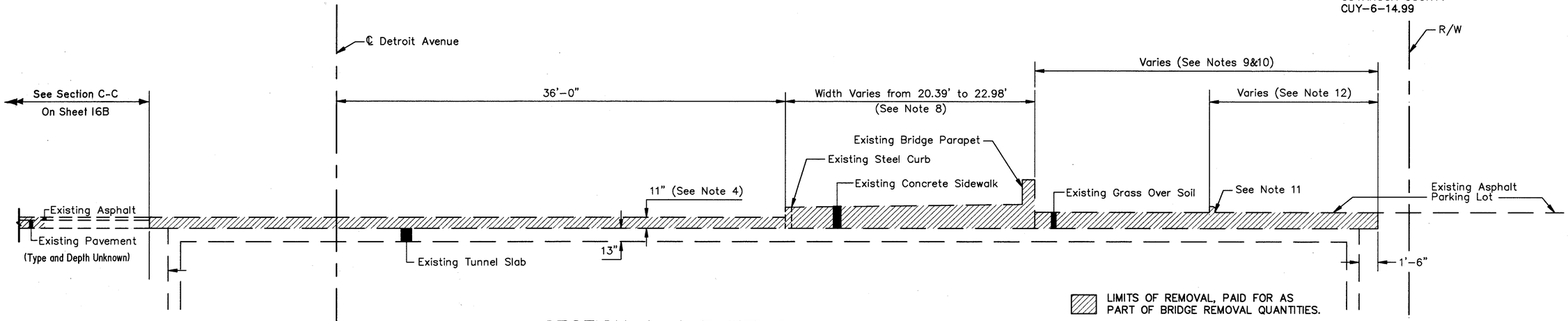

SECTION A-A EXISTING

Sta. 101+77.84 to Sta. 103+92.23

NO SCALE

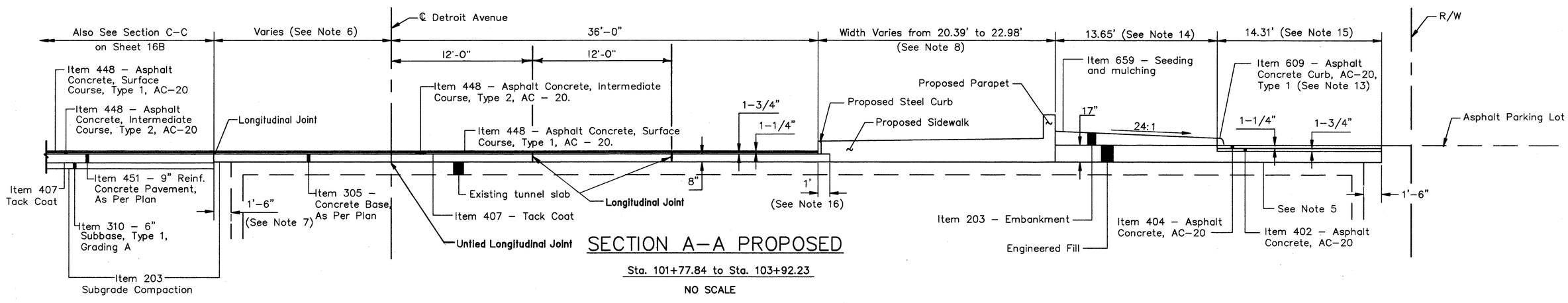

SECTION A-A PROPOSED

Sta. 101+77.84 to Sta. 103+92.23

NO SCALE

ROADWAY QUANTITIES

STATION TO STATION		SIZE			203	402	404	609	659
		LENGTH	WIDTH	AREA	EMBANKMENT	ASPHALT CONCRETE, AC-20	ASPHALT CONCRETE, AC-20	ASPHALT CONCRETE CURB, AC-20, TYPE 1	SEEDING AND MULCHING
FROM	TO	LIN. FT.	LIN. FT.	SQ. FT.	CU.YD.	CU.YD.	CU.YD.	LIN FT	SQ.YD.
101+77.84	103+45.05	167.21	VARIES	2422	67.3				269.1
101+78.80	103+12.27	134.43	VARIES	1492		5.8	8.1	134	
				TOTALS	67	6	8	134	269

*Area by Planimeter

NOTES:

1. For location of Section A-A and plan view of area, see Sheet 16.
2. See Sheet 10 for pavement quantities pertaining to Detroit Avenue.
3. For Joint layout see Sheet 16A.
4. Pavement Core indicates 8" of Asphalt Concrete over 3" of Crumbled Concrete.
5. The top of the Tunnel Slab is to be waterproofed. See Structure Plans for details and quantities.
6. Width is 16'-10" from Sta. 101+78.80 to Sta. 102+61.60.
   Width is 12'-10" from Sta. 102+61.60 to Sta. 103+12.57.
   Width varies from 12'-10" at Sta. 103+12.57 to 14'-10" at Sta. 103+67.08.
   Width varies from 13'-4" at Sta. 103+67.08 to 15'-0" at Sta. 103+90.97.
7. Width is 0' between Sta. 103+67.08 to Sta. 103+92.23.
8. For dimensions and details of existing and proposed Curb, Sidewalk and Parapet, see Structure Plans.
9. Width is 28'-0" from Sta. 101+78.80 to Sta. 102+60.10.
   Width varies from 28'-0" at Sta. 102+60.10 to 16.18' at Sta. 103+12.27.
   Width varies from 16.18' at Sta. 103+12.27 to 8.28' at Sta. 103+45.05.
10. Width is 0" between Sta. 103+45.05 and Sta. 103+92.23.
11. Existing Asphalt Curb begins at Sta. 102+15.30
12. Width varies from 14.5' at Sta. 102+15.30 to 13.4' at Sta. 102+60.10
    Width varies from 13.4' at Sta. 102+60.10 to 0' at Sta. 103+12.27.
13. Proposed Asphalt Curb will match the Existing Asphalt Curb at Sta. 103+12.27.
14. Width varies from 13.65' at Sta. 102+15.29 to 16.37' at Sta. 103+12.27
15. Varies from 14.31' at Sta. 102+15.29 to 13.16' at Sta. 102+60.10.
    Width varies from 13.16' at Sta. 102+60.10 to 0' at Sta. 103+12.27.
    Width is 0' between Sta. 103+12.27 and Sta 103+92.23.
16. For Reinforcing Steel in this 1' width, See Structure Plans, Sheet 72/270
    Steel Quantities are included with Structure Plans.

HOWARD NEEDLES TAMMEN & BERGENDOFF
ARCHITECTS ENGINEERS PLANNERS
HNTB

MADE BY: PF DATE: 3/94
DRAWN BY: MJG DATE: 3/94
CHECKED BY: MJW DATE: 3/94
SCALE: AS SHOWN
11646\TYPSEC\TYPICAL4.DWG

MISCELLANEOUS DETAILS

FHWA REGION	STATE	PROJECT	
5	OHIO		

16
412

CUYAHOGA COUNTY
CUY-6-14.99

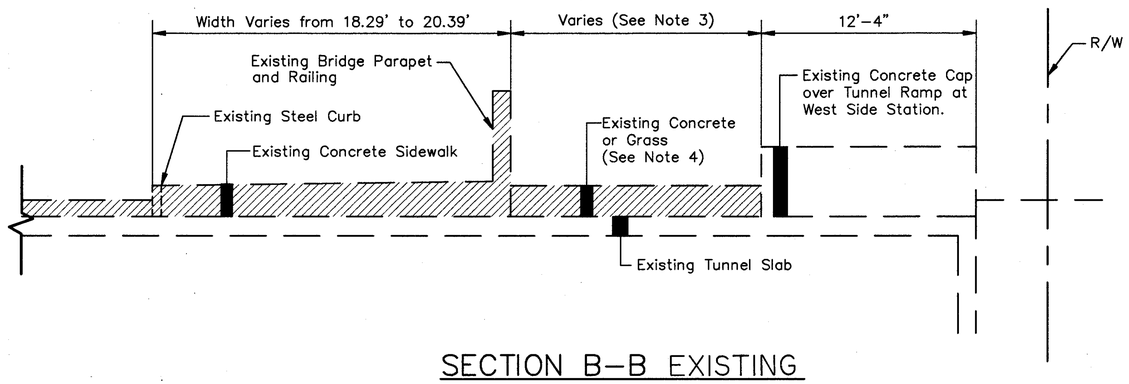

SECTION B–B EXISTING

Sta. 100+88.21 to Sta. 101+77.84

NO SCALE

LIMITS OF REMOVAL, PAID FOR AS PART OF BRIDGE REMOVAL QUANTITIES.

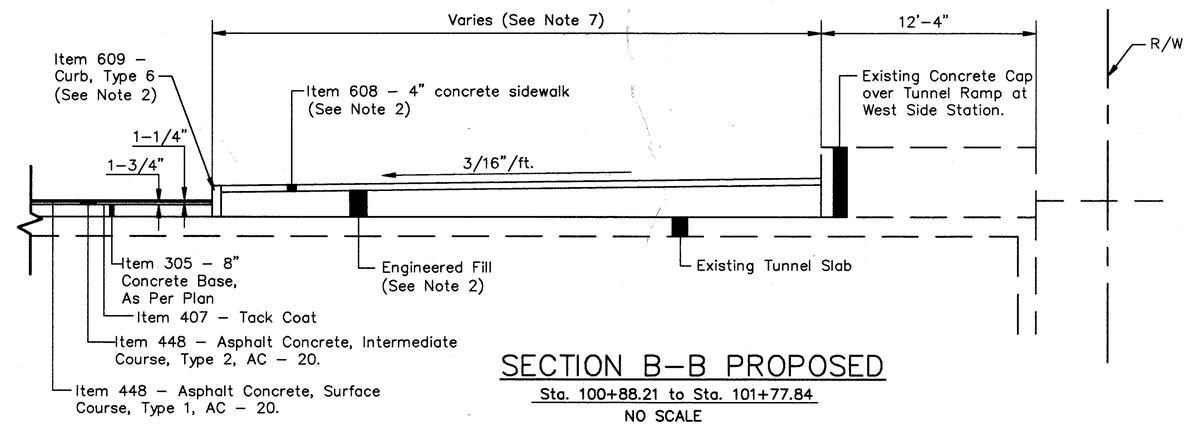

SECTION B–B PROPOSED

Sta. 100+88.21 to Sta. 101+77.84

NO SCALE

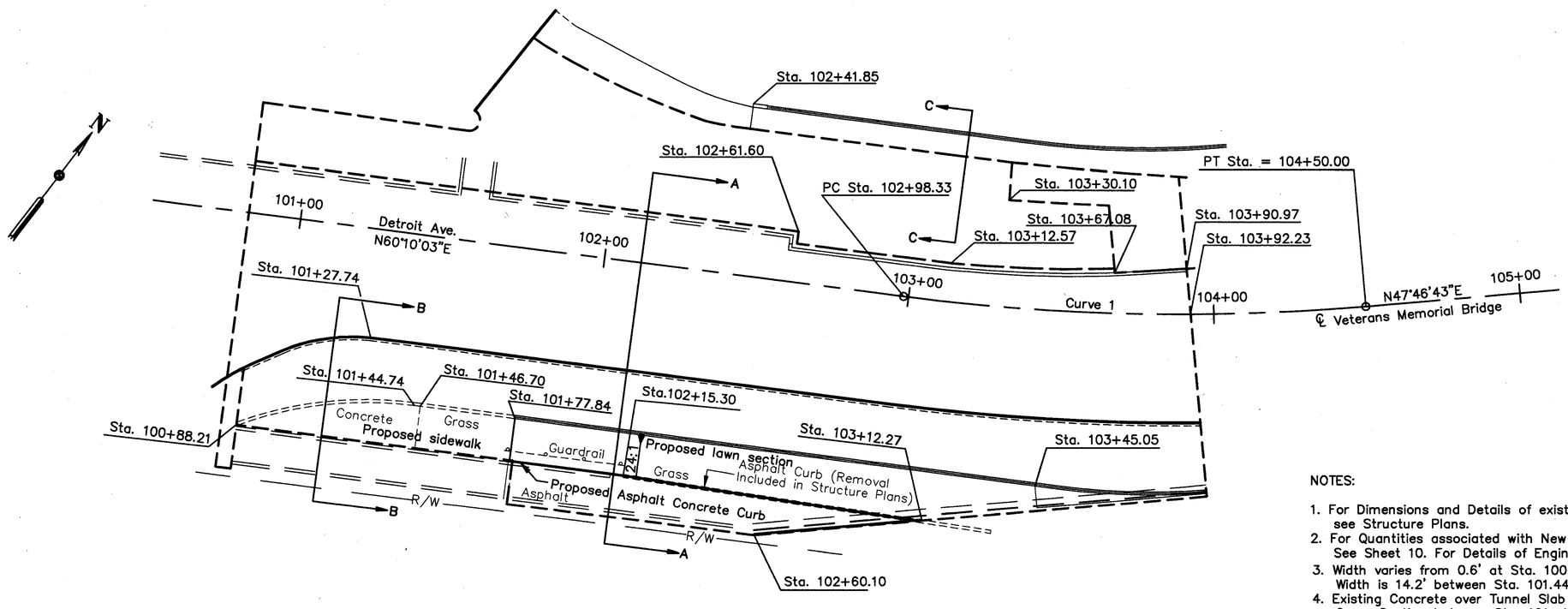

WESTSIDE STATION PAVEMENT REPLACEMENT

NOTES:

1. For Dimensions and Details of existing and proposed Sidewalk and Parapet, see Structure Plans.
2. For Quantities associated with New Pavement, Curb and Sidewalk, See Sheet 10. For Details of Engineered Fill, See Structure Plan 72/270.
3. Width varies from 0.6' at Sta. 100+88.21 to 14.2' at Sta. 101+44.74 . Width is 14.2' between Sta. 101.44.74 to Sta. 101+77.84.
4. Existing Concrete over Tunnel Slab between Sta. 100+88.21 and Sta. 101+46.70. Grass Section between Sta. 101+46.70 and Sta. 101+77.84
5. The top of the Tunnel Slab is to be waterproofed. See Structure Plans for details and quantities.
6. For Section A–A See Sheet 15.
7. Width Varies from 18.89' at Sta. 100+88.21 to 34.02' at Sta 101+27.74. Width is 34.02' between Sta. 101+27.74 and Sta. 101+77.84.
8. For Section C–C See Sheet 16B.

HOWARD NEEDLES TAMMEN & BERGENDOFF
ARCHITECTS ENGINEERS PLANNERS
HNTB

MADE BY: PF DATE: 3/94
DRAWN BY: PF DATE: 3/94
CHECKED BY: MJW DATE: 3/94
SCALE: AS SHOWN
11646\TYPSEC\TYPICAL4.DWG

GRAPHIC SCALE
100 0 50 100
HORIZONTAL SCALE IN FEET

MISCELLANEOUS ROADWAY DETAILS

FHWA REGION	STATE	PROJECT	
5	OHIO		

16A
412

CUYAHOGA COUNTY
CUY-6-14.99

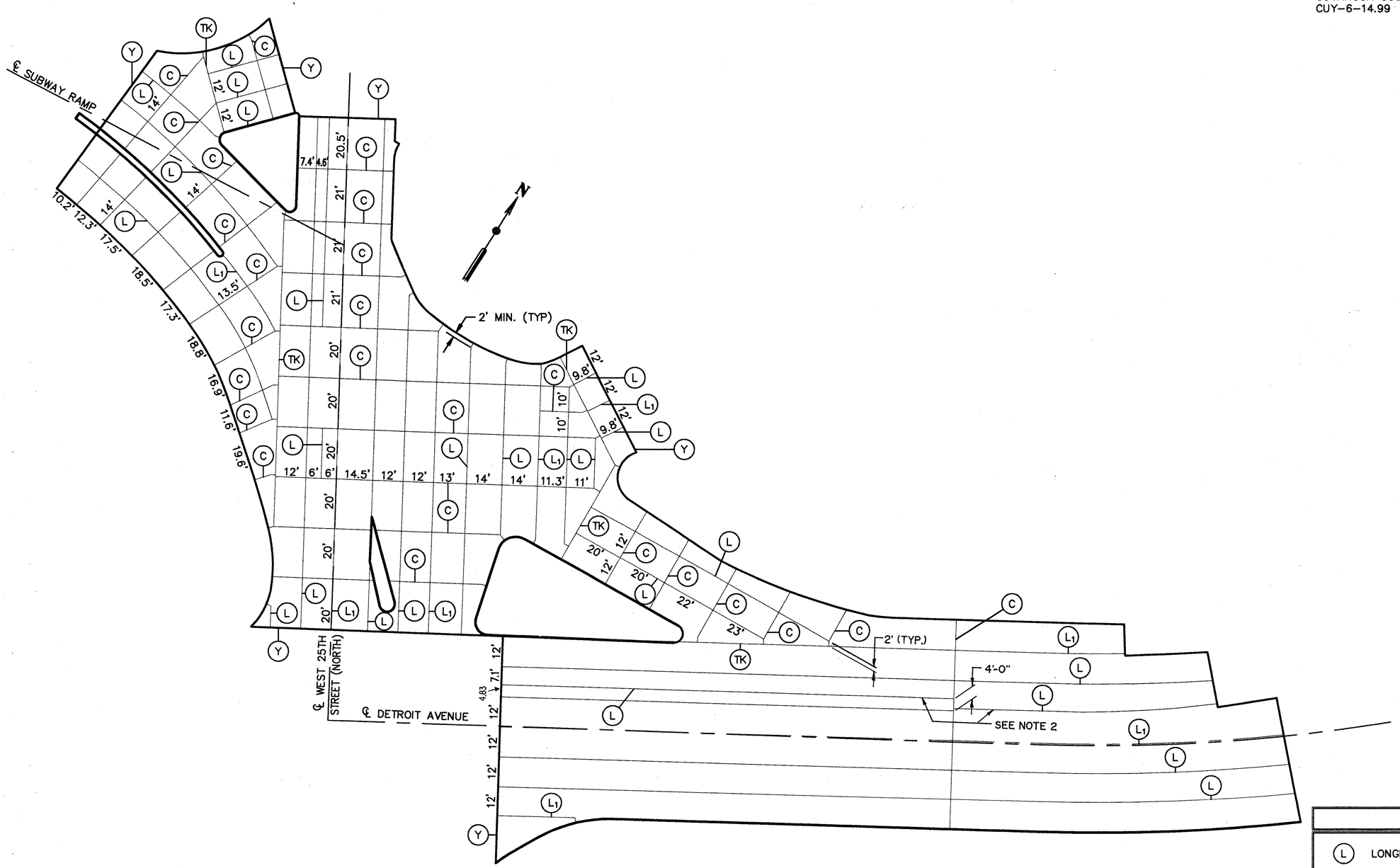

JOINT DETAILS

NOTES:
1. See Standard Construction Drawings BP-2.1, 2.2, & 2.5 for details.
2. This joint parallels tunnel walls, see section A-A on sheet 15.

LEGEND	
L	LONGITUDUAL JOINT
L_1	LONGITUDUAL JOINT WITHOUT TIE BARS
C	CONTRACTION JOINT
TK	THICKENED EDGE KEY JOINT
Y	CONTRACTION JOINT, AS PER STD. DRAWING BP-2.5

HOWARD NEEDLES TAMMEN & BERGENDOFF
ARCHITECTS ENGINEERS PLANNERS HNTB

MADE BY: PF DATE: 6/94
DRAWN BY: PF DATE: 6/94
CHECKED BY: MJW DATE: 6/94
SCALE: AS SHOWN
JOINT.DWG

GRAPHIC SCALE
20 0 10 20
HORIZONTAL SCALE IN FEET

MISCELLANEOUS DETAILS

FHWA REGION	STATE	PROJECT	
5	OHIO		

16B / 412

CUYAHOGA COUNTY
CUY-6-14.99

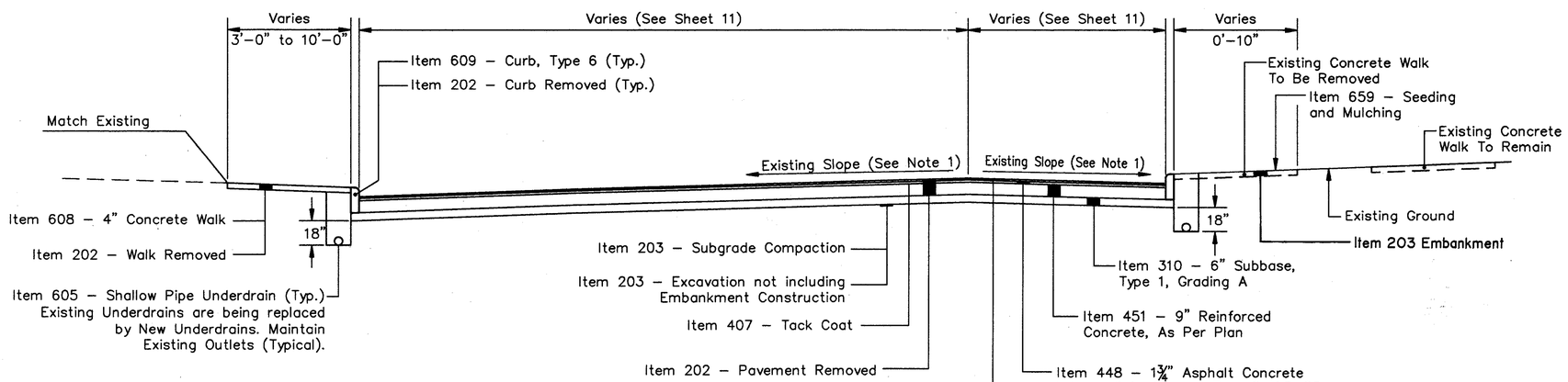

SECTION B–B

WEST 25TH ST. STA. 20+36 TO STA. 22+75

NO SCALE

NOTES:

1.) The Contractor is resposible for laying out the grade for the Existing Pavement before removal of the pavement. The Proposed shall match the Existing Grade. See Construction Layout Stakes As Per Plan Note on Sheet 5.
2.) A Removal Quantity has been estimated for Item 202 – Pipe Removed, 24" And Under (For Existing Underdrains)
3.) For Location of Section B–B See Sheet 11.

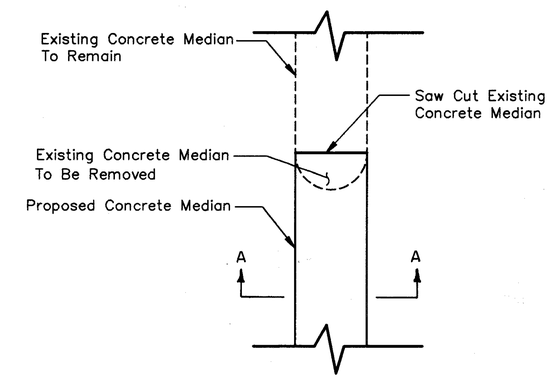

CONCRETE MEDIAN DETAIL (PLAN)

NO SCALE

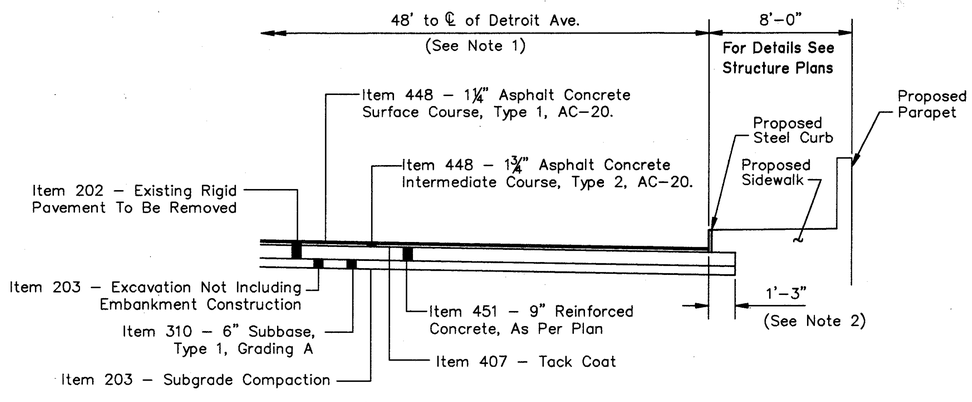

SECTION C–C

Sta. 102+41.85 to Sta. 103+30.10

NO SCALE

NOTES:

1.) Varies from 48' at Sta. 102+98.33 to 47.43' at Sta. 103+30.10.
2.) For Reinforcing Steel in this 1'-3" width, See Structure Plans, Sheet 72/270. Steel Quantities are included with Structure Plans.
3.) For Location of Section C–C See Sheet 10.

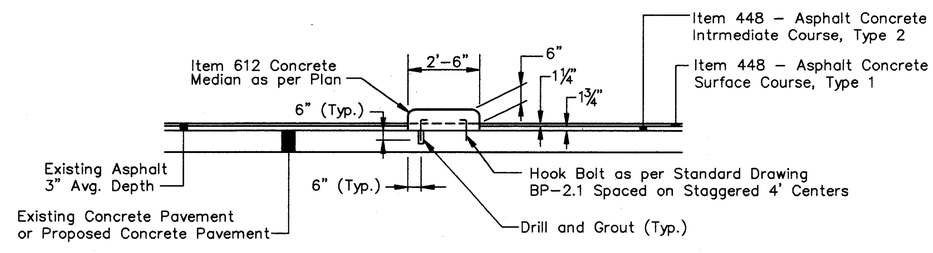

SECTION A-A

CONCRETE MEDIAN, AS PER PLAN

NO SCALE

NOTES:

1.) See Sheet 11 for location of concrete median at Subway Ramp.

HOWARD NEEDLES TAMMEN & BERGENDOFF
ARCHITECTS ENGINEERS PLANNERS
HNTB

MADE BY: PF DATE: 6/94
DRAWN BY: MJG DATE: 6/94
CHECKED BY: AHS DATE: 6/94
SCALE: AS SHOWN
11646\TYPSEC\TYPICAL5.DWG

MISCELLANEOUS DETAILS

FHWA REGION	STATE	PROJECT	
5	OHIO		

17 / 412

CUYAHOGA COUNTY
CUY-6-14.99

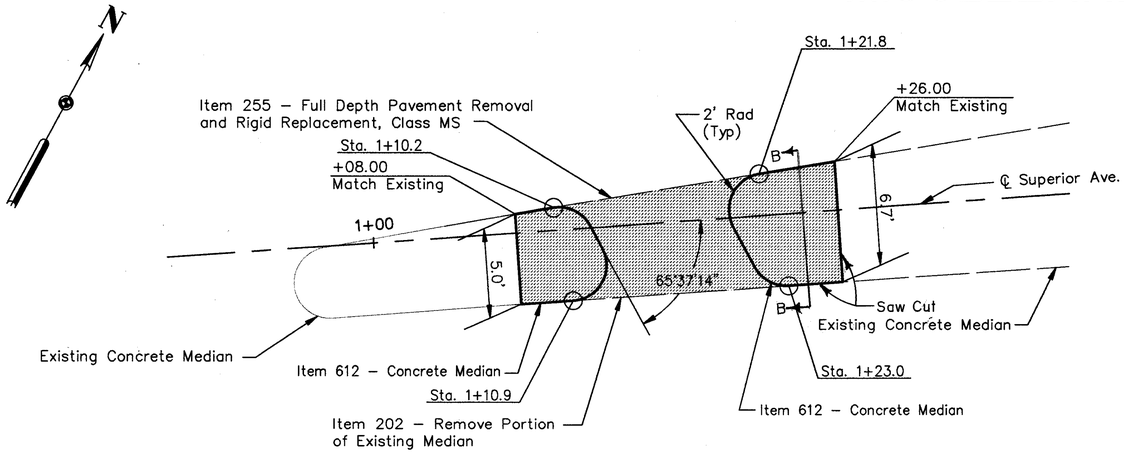

MEDIAN REPLACEMENT DETAIL

NO SCALE

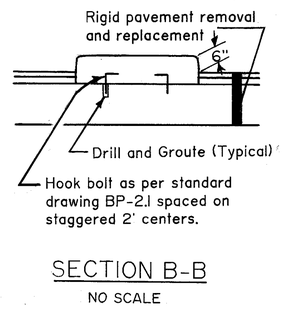

SECTION B-B

NO SCALE

MISCELLANEOUS QUANTITIES			
	255	612	202
LOCATION	FULL DEPTH PAVEMENT REMOVAL AND RIGID REPLACEMENT, CLASS MS	CONCRETE MEDIAN AS PER PLAN	CONCRETE MEDIAN REMOVED
Superior Ave.	SQ. YD.	SQ. YD.	SQ. YD.
	11.7	6.3	11.7
TOTALS:	12	6	12

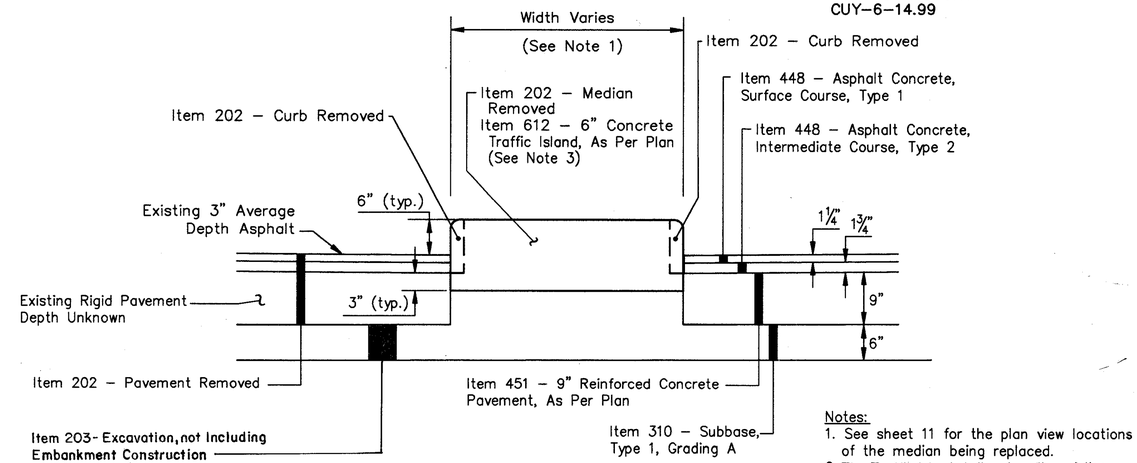

SECTION A–A

NO SCALE

Notes:
1. See sheet 11 for the plan view locations of the median being replaced.
2. The Traffic Island shall replace the existing curb and median at the existing locations.
3. See standard construction drawing MC-6 for construction of Item 612 – Concrete Median Pavement. The thickness of the Traffic Island shall be increased to provide a 6" Reveal after placement of the Asphalt Courses.

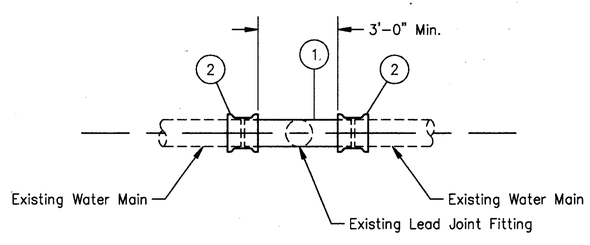

4" CUTTING-IN SLEEVE

NO SCALE

(1) Plain End x Plain End Ductile Iron Pipe as specified (cut-to-suit)

(2) Connections shall be made with Dresser Coupling Style No. 38 W/stops removed or retained mechanical joint solid sleeves (short pattern) Ductile Iron Class 350 or Cast Iron Class 250.

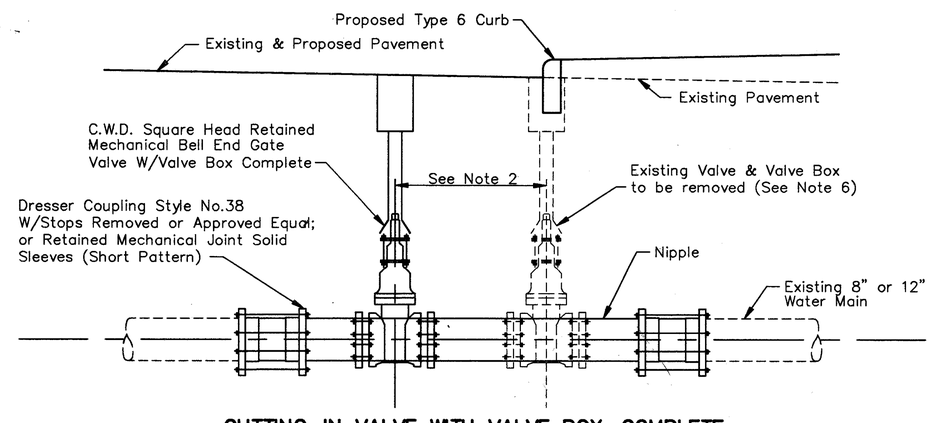

CUTTING-IN VALVE WITH VALVE BOX, COMPLETE

NO SCALE

NOTES:
1.) Before cutting existing water main the nipples shall be connected to the mechanical joint bell end gate valve. After cutting pipe final connections shall be made with couplings/solid sleeves as specified.
2.) Minimum distance as required for valve box to clear the curb.
3.) Cost of the cut-in-valve will include the removal & disposal of the existing valve & valve box.
4.) Water service shut-off shall be coordinated with the City of Cleveland Division of Water.
5.) For water work quantities, see Sheet 13.
6.) A double valve box has been found on the 12" water line. This existing double valve will be removed and replaced with one valve as per detail.

HOWARD NEEDLES TAMMEN & BERGENDOFF
ARCHITECTS ENGINEERS PLANNERS HNTB

MADE BY: DGD DATE: 3/94
DRAWN BY: DGD DATE: 3/94
CHECKED BY: PF DATE: 4/94
SCALE: AS SHOWN
11646\PLAN\VALVEDET.DWG

FHWA REGION	STATE	PROJECT	
5	OHIO		

18
412

CUYAHOGA COUNTY
CUY-6-14.99

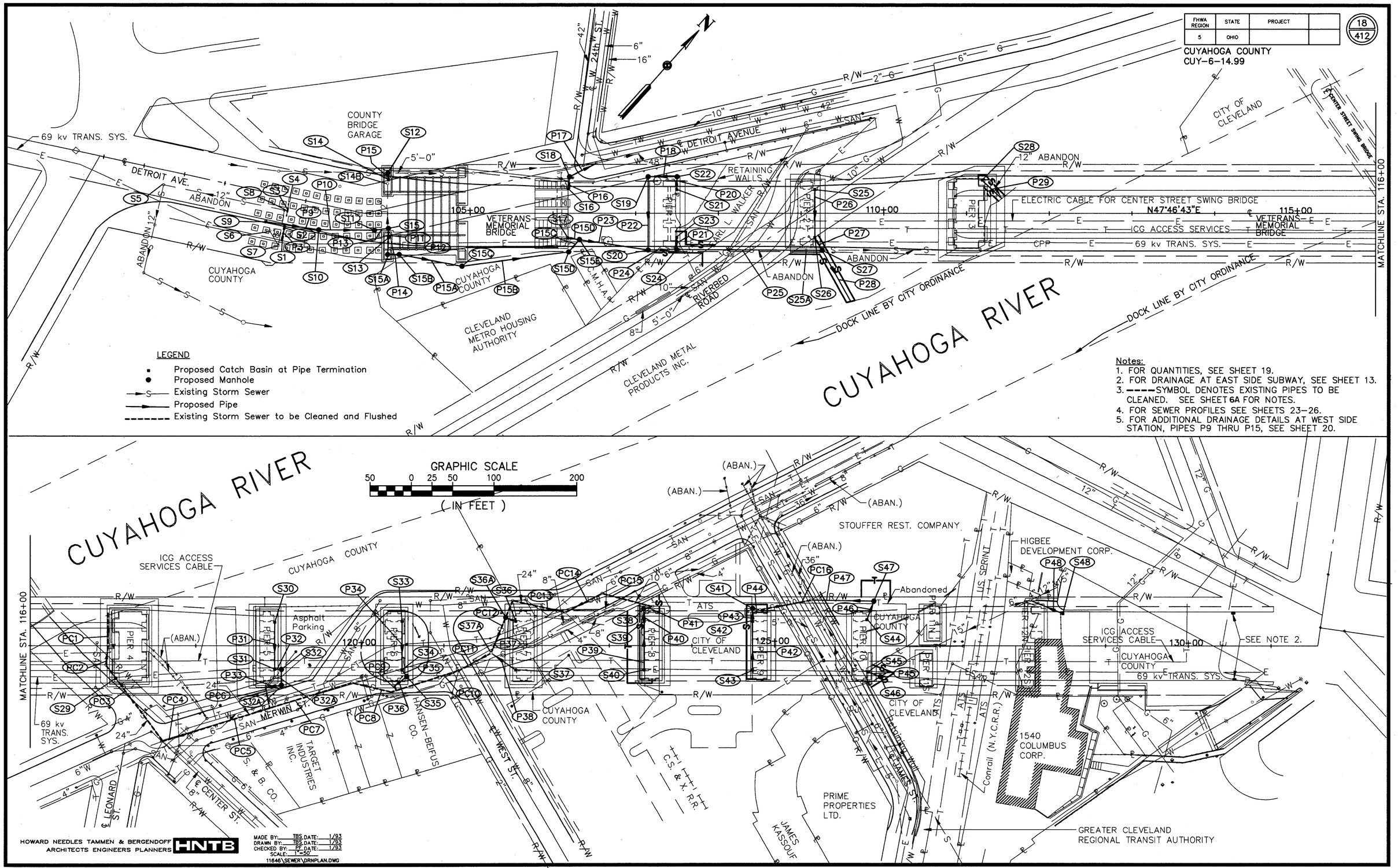

Notes:
1. FOR QUANTITIES, SEE SHEET 19.
2. FOR DRAINAGE AT EAST SIDE SUBWAY, SEE SHEET 13.
3. ----SYMBOL DENOTES EXISTING PIPES TO BE CLEANED. SEE SHEET 6A FOR NOTES.
4. FOR SEWER PROFILES SEE SHEETS 23–26.
5. FOR ADDITIONAL DRAINAGE DETAILS AT WEST SIDE STATION, PIPES P9 THRU P15, SEE SHEET 20.

HOWARD NEEDLES TAMMEN & BERGENDOFF
ARCHITECTS ENGINEERS PLANNERS
HNTB

MADE BY: TBS DATE: 1/93
DRAWN BY: TBS DATE: 1/93
CHECKED BY: PF DATE: 1/93
SCALE: 1"=50'
11646\SEWER\DRNPLAN.DWG

DRAINAGE PLAN

REF. NO.	STATION TO STATION		SPECIAL PIPE CLEANOUT LIN. FT.
PC1	116+94	116+94	40
PC2	116+91	116+94	25
PC3	117+60	116+91	116
PC4	117+97	117+60	39
PC5	118+89	117+97	98
PC6	118+85	118+89	26
PC7	119+89	118+89	104
PC8	120+36	119+89	49
PC9	120+40	120+42	6
PC10	121+18	120+36	86
PC11	121+57	121+18	45
PC12	121+83	121+57	70
PC13	122+47	121+83	66
PC14	122+91	122+47	51
PC15	123+52	122+91	63
PC16	124+82	125+44	63
TOTAL			947

DRAINAGE QUANTITIES

REF. NO.	REF. NO.	STATION TO STATION		SIDE	603 12" CONDUIT TYPE B LIN. FT.	603 12" CONDUIT TYPE C LIN. FT.	603 12" CONDUIT TYPE F, 707.05 TYPE C LIN. FT.	603 15" CONDUIT TYPE C LIN. FT.	603 24" CONDUIT TYPE B LIN. FT.	604 CATCH BASIN NO. 2-3, AS PER PLAN EACH	604 MANHOLE NO. 3 EACH	604 MANHOLE NO. 5 EACH	604 MANHOLE ADJUSTED TO GRADE AS PER PLAN EACH	202 MANHOLE ABANDONED EACH	202 MANHOLE REMOVED EACH	603 12" CONDUIT TYPE C, AS PER PLAN LIN. FT.	202 INLET ABANDONED EACH	SPECIAL TRENCH DRAIN LIN. FT.
S1	P3	102+80	102+80	RT		8												6
S2		102+80		RT														6
S3		102+80		RT													1	
S4		102+80		RT													1	
S5		101+28		RT										1				
S6		102+65		RT										1				
S7		102+79		RT										1				
S8		102+75		RT										1				
S14B		104+00 *		LT											1			
S25A		109+06		RT											1			
S9	P9	102+58.37	103+23.01	RT		65				1								
S10	P10	103+23.01	103+84.10 *	RT		67					1							
S11	P13	103+84.10 *	104+01 *	RT		17					1							
S13	P12	104+01 *	104+00 *	RT						1						21		
S14	P15	104+01 *	104+00 *	LT						1						8		
S12	–	104+00 *	–	LT								1						
S15	P11	104+01 *	104+01 *	RT							1					12		
S15A	P14	104+00 *	104+14 *	RT							1					14		
S15B	P15A	104+14 *	104+90	RT			77				1							
S15C	P15B	104+90	106+19	RT		130					1							
S15D	P15C	106+19	106+32	RT		20					1							
S16	P16	106+18.50	106+20	LT		15				1								
S17	P15D	106+18	106+32	RT			14			1								
S15E	P23	106+32	107+15	RT		83					1							
S18	P17	106+20	106+52.51	LT	36						1							
S19	P22	107+15	107+15	LT&RT		90					1							
S20	P24	107+15	107+49.67	RT		35					1							
S21	P20	107+49.67	107+50	LT		16				1								
S22	P18	107+50	107+15	LT		35					1							
S23	P21	107+49.67	107+49.67	RT		15				1								
S24	P25	107+49.67	109+25.50	RT	176						1							
S25	P26	109+16.63	109+16.63	LT&RT		59				1								
S26	P27	109+16.63	109+25.50	RT		18				1								
S27	P28	109+25.50	109+60.08	RT			70				1							
S28	P29	111+19	111+43	LT			39			1								
S29	–	117+03.50	–	RT					8	1								
S30	P31	118+93.67	118+93.67	LT&RT	60					1								
S31	P32	118+93.67	119+03.59	RT	8					1								
S32	P32A	119+03.59	119+03.59	RT	19						1							
S32A	P33	119+03.59	118+84.78	RT		19					1							
S33	P34	120+49.42	120+49.42	LT&RT		60				1								
S34	P35	120+49.42	120+55.07	RT		10				1								
S35	P36	120+55.07	120+40.22	RT	19						1							
S36	P37	121+86.83	121+75	LT		13				1								
S37	P38	121+86.83	121+57.14	RT		34				1								
S38	P41	123+41.50	123+52.44	LT		11					1							
S39	P40	123+42.08	123+41.50	LT		16				1								
S40	P39	123+42.08	123+42.08	RT&LT		60				1								
S41	P44	124+73.33	124+82.50	LT		9					1							
S42	P43	124+73.33	124+73.33	LT		16				1								
S43	P42	124+73.33	124+73.33	RT&LT		60				1								
S44	P46	126+11.55	126+20	LT		24				1								
S45	P45	126+11.55	126+28	RT		16				1								
S46		126+28		RT				8			1							
S47	P47	126+20	125+43.91	LT	76						1							
S48	P48	128+48.50	128+09	LT		43				1								
S36A		121+75		LT								1						
S37A		121+57.14		RT									1					
TOTALS					394	1064	200	8	8	24	21	2	1	4	2	55	2	12

* ℄ Extended

NOTE:
For locations of reference numbers see sheet 18.

DRAINAGE QUANTITIES

FHWA REGION	STATE	PROJECT	
5	OHIO		

CUYAHOGA COUNTY
CUY-6-14.99

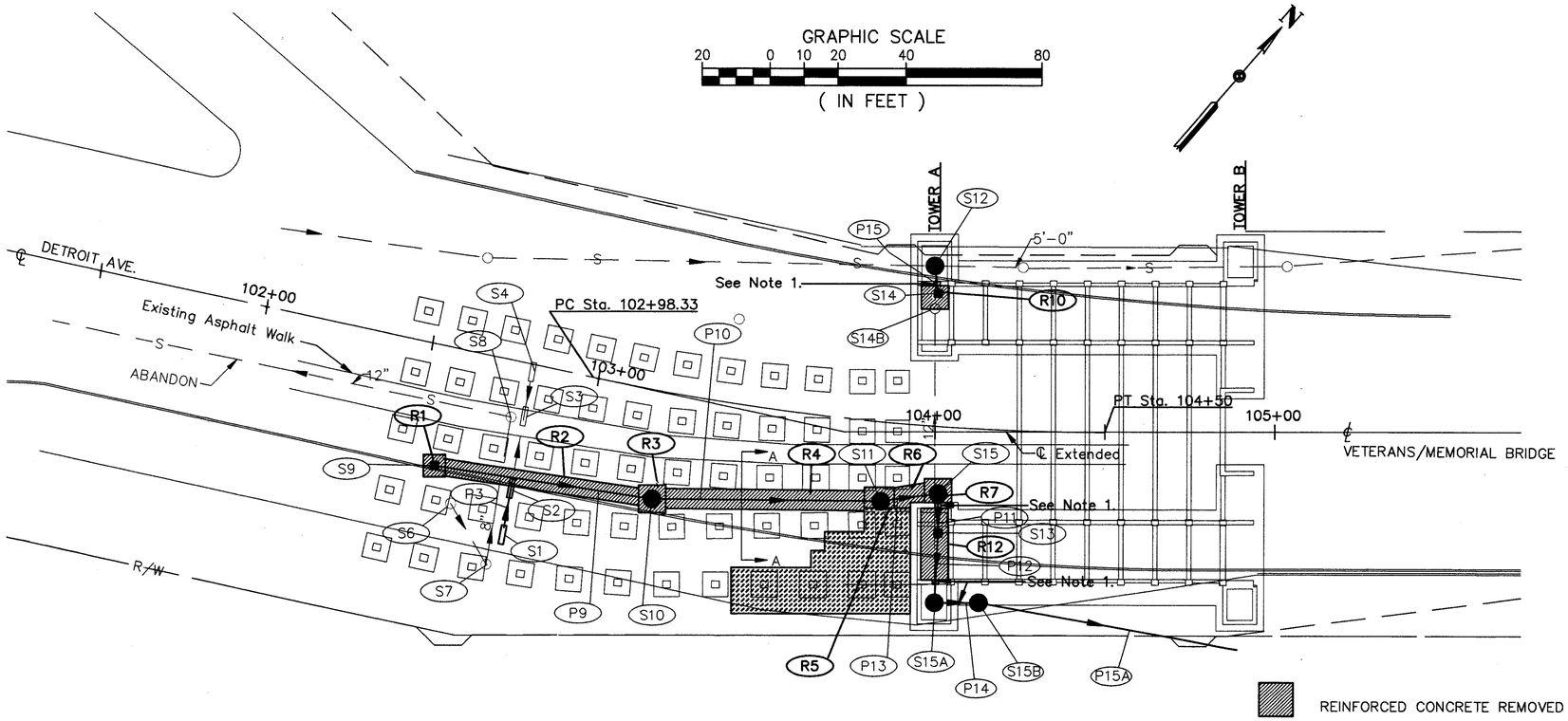

REINFORCED CONCRETE REMOVED AND REPLACED

LIMITS OF CONCRETE REPLACEMENT INCLUDED WITH STRUCTURAL PLANS

QUANTITIES								
REF NO	STATION TO STATION		SIDE	LENGTH	WIDTH	AREA	202 CONCRETE BASE REMOVED	305 CONCRETE BASE AS PER PLAN
				LIN. FT.	LIN. FT.	SQ. FT.	SQ. YD.	SQ. YD.
R1	102+56	102+62	RT	6.5	6.5	42.3	4.7	2.6
R2	102+62	103+20	RT	58.0	5.0	290.0	32.2	32.2
R3	103+20	103+28	RT	8.0	8.0	64.0	7.1	6.8
R4	103+28	103+79	RT	58.5	6.0	351.0	39.0	39.0
R5	103+79	103+88	RT	8.8	6.0	52.8	5.9	5.6
R6	103+88	103+97	RT	9.0	6.5	58.5	6.5	6.5
R7	103+97	104+05	RT	8.0	8.0	64.0	7.1	6.8
R10	103+96	104+04	LT	7.0	8.0	56.0	6.2	4.1
R12	103+96	104+04	RT	21.0	8.0	168.0	18.7	16.6
TOTALS							128	120

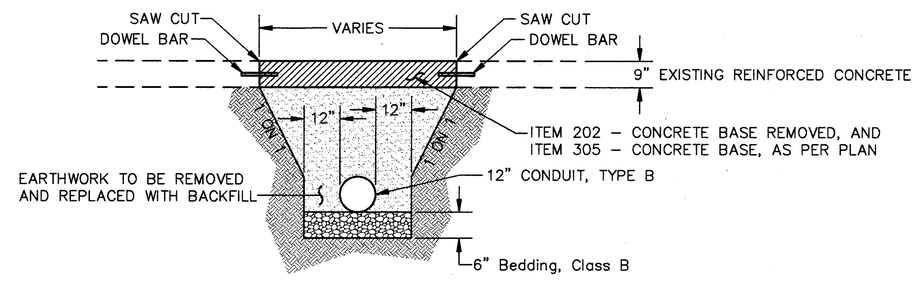

SECTION A–A
NO SCALE

NOTES:

1. THE STORM SEWER WILL GO THROUGH THE EXISTING CONCRETE WALLS BY DRILLING A HOLE THROUGH THE WALL SO THE PIPE CAN BE ACCOMODATED. (SEE NOTE ON SHEET 6A.) SEE SEWER PROFILE FOR ELEVATIONS.
2. THE CONTRACTOR IS TO REMOVE ALL DIRT IN THE WEST STATION. FOR LIMITS OF WORK AND QUANTITIES SEE STRUCTURE PLANS.
3. FOR ℄ EXTENDED GEOMETRICS, SEE STRUCTURE PLAN SHEET 21/270.

HOWARD NEEDLES TAMMEN & BERGENDOFF
ARCHITECTS ENGINEERS PLANNERS
HNTB

MADE BY: TMA DATE: 7/93
DRAWN BY: TMA DATE: 7/93
CHECKED BY: PE DATE: 10/93
SCALE: AS SHOWN
11646\SEWER\DRNTUNDT.DWG

DRAINAGE DETAILS

DRAINAGE DETAILS

FHWA REGION	STATE	PROJECT	
5	OHIO		

CUYAHOGA
CUY-6-14.99

20A / 412

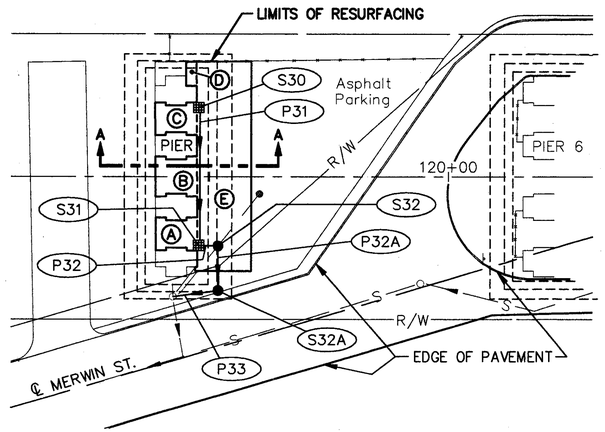

PIER 5 PLAN DETAIL

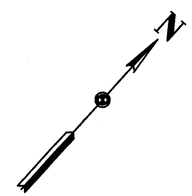

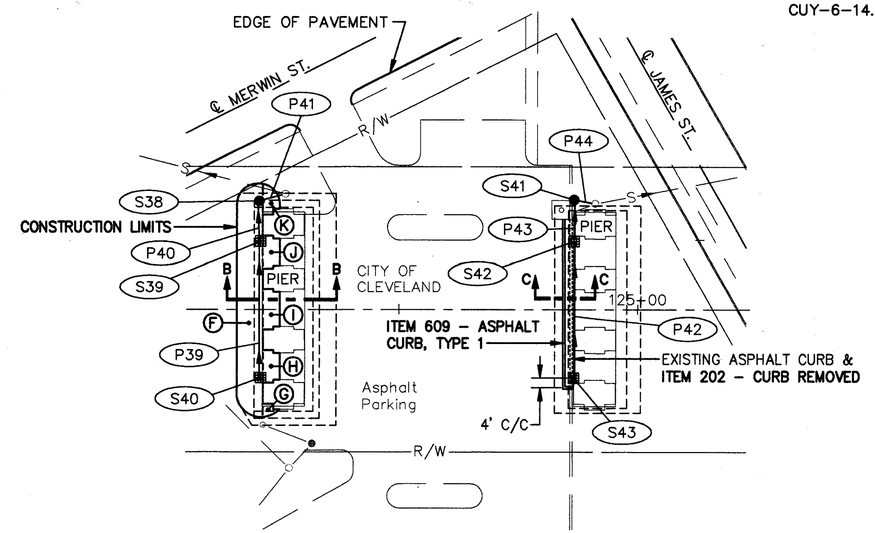

PIER 8 PLAN DETAIL

PIER 9 PLAN DETAIL

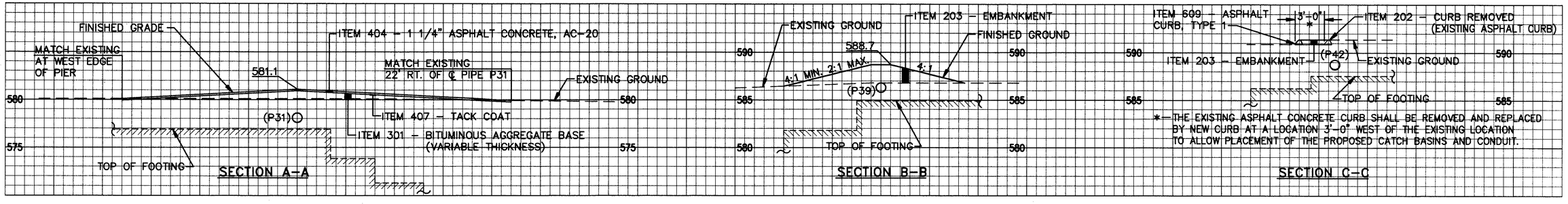

GRAPHIC SCALE
5 0 5
HORIZONTAL AND VERTICAL SCALE IN FEET
(SECTIONS)

QUANTITIES AT PIER 5

REF. #	SIZE			301	404	407
				5"(AVG. DEPTH) BITUMINOUS AGGREGATE BASE, AC-20	ASPHALT CONCRETE AC-20	TACK COAT (0.1 GAL./ SQ. YD.)
	LENGTH	WIDTH	AREA			
	LIN. FT.	LIN. FT.	SQ. FT.	CU. YD.	CU. YD.	GAL.
A	12.75 *	17.5	223.1	3.4	0.9	2.5
B	15.5 *	17.5	271.3	4.2	1.0	3.0
C	12.75 *	17.5	223.1	3.4	0.9	2.5
D	10.5	4.5	47.3	0.7	0.2	0.5
E	88	22.5	1980	30.6	7.6	22.0
TOTALS:				42	11	31

* AVERAGE WIDTH

QUANTITIES AT PIER 8

REF. #	SIZE				203
					EMBANKMENT
	LENGTH	WIDTH	AREA	AVG. DEPTH	
	LIN. FT.	LIN. FT.	SQ. FT.	FT.	CU. YD.
F	97	11	1067	1.25	49.4
G	5*	5	25	1.25	1.2
H	12.5	7	87.5	1.25	4.1
I	16	7	112	1.25	5.2
J	12.5	7	87.5	1.25	4.1
K	9*	6	54	1.25	2.5
TOTALS:					67

* AVERAGE WIDTH

QUANTITIES AT PIER 9

SIZE			202	203	609
			CURB REMOVED	EMBANKMENT	ASPHALT CONCRETE CURB, AC-20, TYPE 1
LENGTH	WIDTH	AREA			
LIN. FT.	LIN. FT.	SQ. FT.	LIN. FT.	CU. YD.	LIN.FT.
71	2.5	177.5	71	3.3	74
TOTALS:			71	4	74

Note:

For Sewer Profiles See Sheet 23-26.

HOWARD NEEDLES TAMMEN & BERGENDOFF
ARCHITECTS ENGINEERS PLANNERS HNTB

MADE BY: MJW DATE: 6/9/94
DRAWN BY: DJF DATE: 6/10/94
CHECKED BY: PE DATE: 6/13/94
SCALE: AS SHOWN
11646\SEWER\DRNDET.DWG

DRAINAGE DETAILS

FHWA REGION	STATE	PROJECT	
5	OHIO		

21/412

CUYAHOGA COUNTY
CUY-6-14.99
VETERANS MEMORIAL BRIDGE

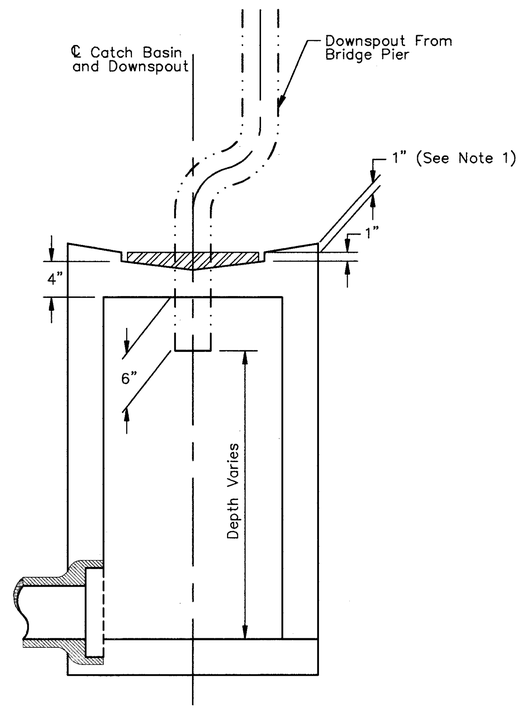

SECTION A–A

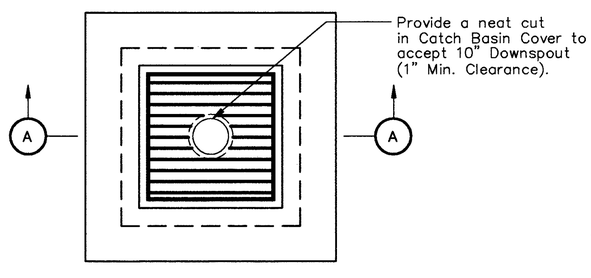

PLAN

CATCH BASIN No. 2–3, AS PER PLAN

NO SCALE

NOTES:

1. THE CATCH BASIN GRATE DOES NOT NEED TO BE DEPRESSED ONE INCH AT LOCATIONS WHERE THE PROPOSED CATCH BASIN IS ON A STEEP SLOPE. IT ALSO DOES NOT NEED TO BE DEPRESSED IN THE WEST STATION TUNNEL AREA. THE FOLLOWING CATCH BASIN GRATES NEED NOT BE DEPRESSED: S9, S13, S14, S16, S17, S21, S23, S26, S28.

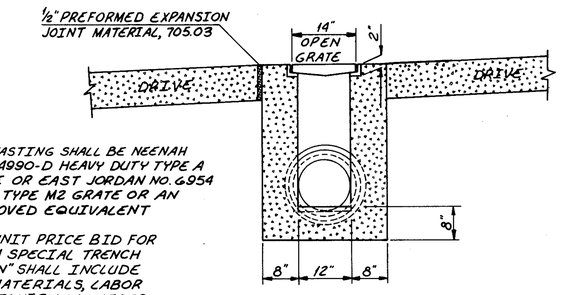

THE CASTING SHALL BE NEENAH NO. R-4990-D HEAVY DUTY TYPE A GRATE OR EAST JORDAN NO. 6954 WITH TYPE M2 GRATE OR AN APPROVED EQUIVALENT

THE UNIT PRICE BID FOR "ITEM SPECIAL TRENCH DRAIN" SHALL INCLUDE ALL MATERIALS, LABOR AND EQUIPMENT NECESSARY TO COMPLETE THIS ITEM IN ACCORDANCE WITH THE PROVISIONS OF ITEM 604

SECTION B-B

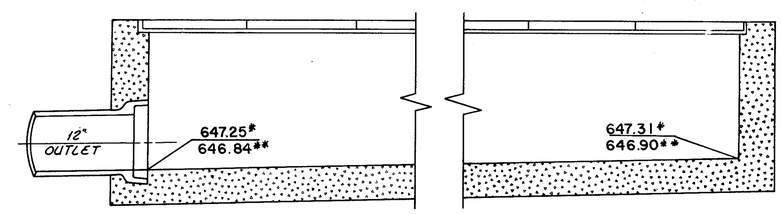

SECTION A-A

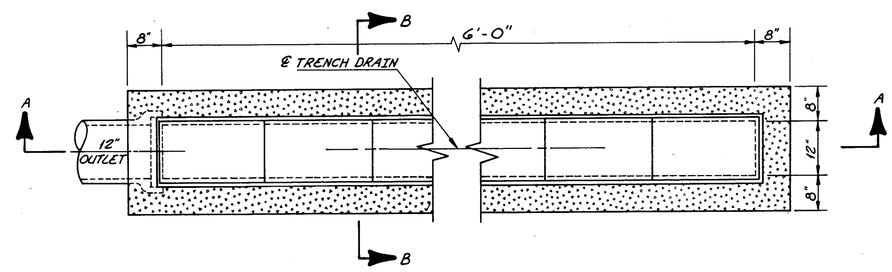

PLAN

TRENCH DRAIN DETAILS

NO SCALE

* TRENCH DRAIN S1
** TRENCH DRAIN S2

HOWARD NEEDLES TAMMEN & BERGENDOFF
ARCHITECTS ENGINEERS PLANNERS HNTB

MADE BY: PF DATE: 3/94
DRAWN BY: MJG DATE: 4/94
CHECKED BY: MJW DATE: 4/94
SCALE: AS SHOWN
11646\SEWER\CBDET001.DWG

MISCELLANEOUS DETAILS

FHWA REGION	STATE	PROJECT	
5	OHIO		

22
412

CUYAHOGA COUNTY
CUY-6-14.99
VETERANS MEMORIAL BRIDGE

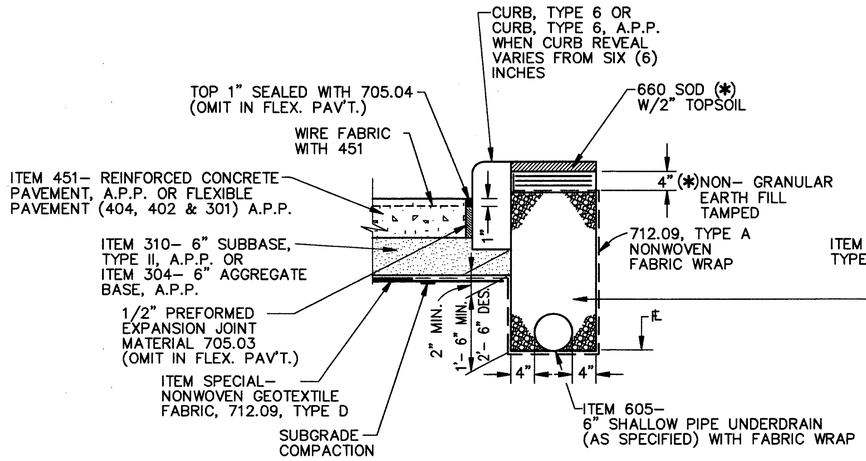

CURB, TYPE 6 AND 6" SHALLOW PIPE UNDERDRAIN WITH FABRIC WRAP

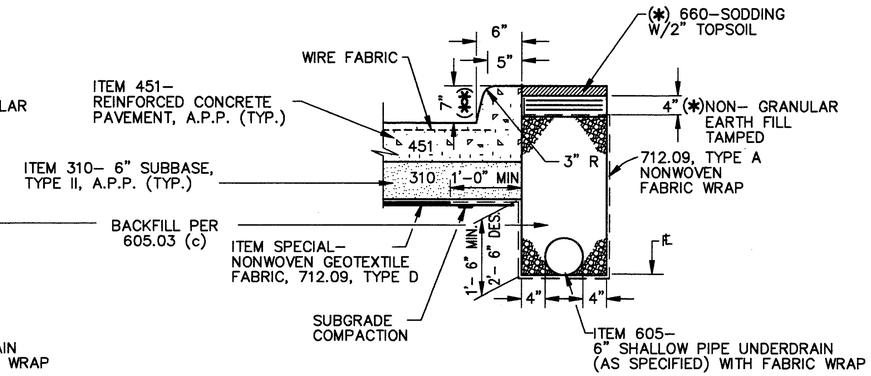

CURB, TYPE 2-A, A.P.P. (**) AND 6" SHALLOW PIPE UNDERDRAIN WITH FABRIC WRAP

NOTES:

WHEN ITEM 605 CALLS FOR 706.08 CONDUIT, THE CONDUIT SHALL BE PERFORATED BELL AND SPIGOT VITRIFIED CLAY PIPE WITH PERFORATIONS IN ACCORDANCE WITH A.A.S.H.T.O. M- 65, WITH THREE (3) LUGS PROVIDED IN THE BELL END TO CENTER AND ALIGN THE PIPE AND PROVIDE A THREE- EIGHTH (3/8) INCH GAP BETWEEN PIPE LENGTHS. PERFORATIONS ARE PLACED DOWN.

(*) WHEN USING 659-SEEDING AND MULCHING IN LIEU OF SOD WITH TOPSOIL, THE UNDERDRAIN TRENCH SHALL SIMPLY BE TOPPED WITH SIX (6) INCHES OF NON- GRANULAR EARTH FILL TAMPED.

(**) SIMPLY SPECIFY CURB, TYPE 2-A WHEN UTILIZING A SIX (6) INCH REVEAL PER O.D.O.T. STANDARD CONSTRUCTION DRAWING BP-5.1. SPECIFY CURB, TYPE 2-A, AS PER PLAN WHEN REVEAL VARIES FROM SIX (6) INCHES. SPECIFY CURB, TYPE 2- B WHEN UTILIZING WEARING COURSE AND SIX (6) INCH REVEAL PER BP-5.1 AND CURB, TYPE 2-B, AS PER PLAN WHEN REVEAL VARIES FROM SIX (6) INCHES.

THIS DRAWING IS USED IN CONJUNCTION WITH O.D.O.T. S.C.D. BP-5.1 AND CUYAHOGA COUNTY C.D. BP-2.5C.

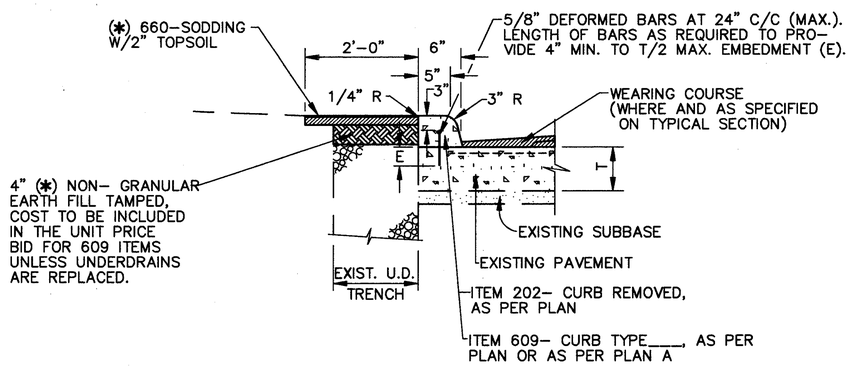

INTEGRAL CONCRETE CURB REPLACEMENT DETAIL METHOD "A"

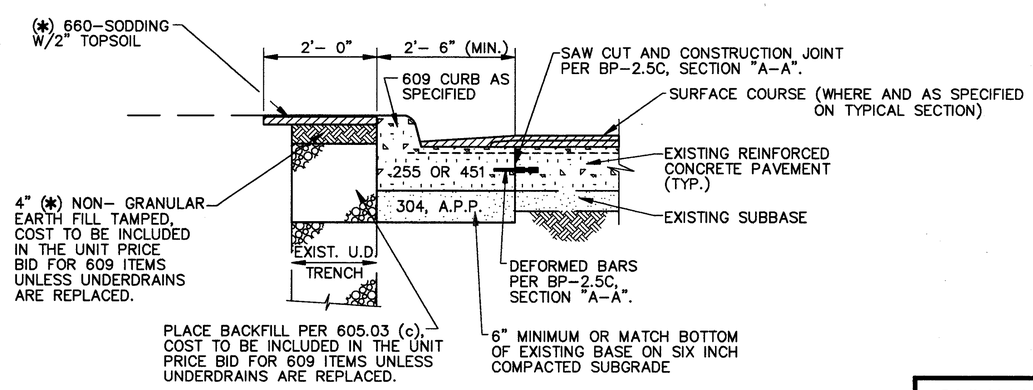

INTEGRAL CONCRETE CURB REPLACEMENT DETAIL METHOD "B"

(SEE BP-2.5C)

CUYAHOGA COUNTY ENGINEER

CONCRETE CURB AND UNDERDRAIN DETAILS

DATE
6-1-81
6-23-83
3-1-86
5-5-87
2-8-88
3-9-92

CONSTRUCTION DRAWING MD-1C

HOWARD NEEDLES TAMMEN & BERGENDOFF
ARCHITECTS ENGINEERS PLANNERS HNTB

FHWA REGION	STATE	PROJECT	
5	OHIO		

CUYAHOGA COUNTY
CUY-6-14.99

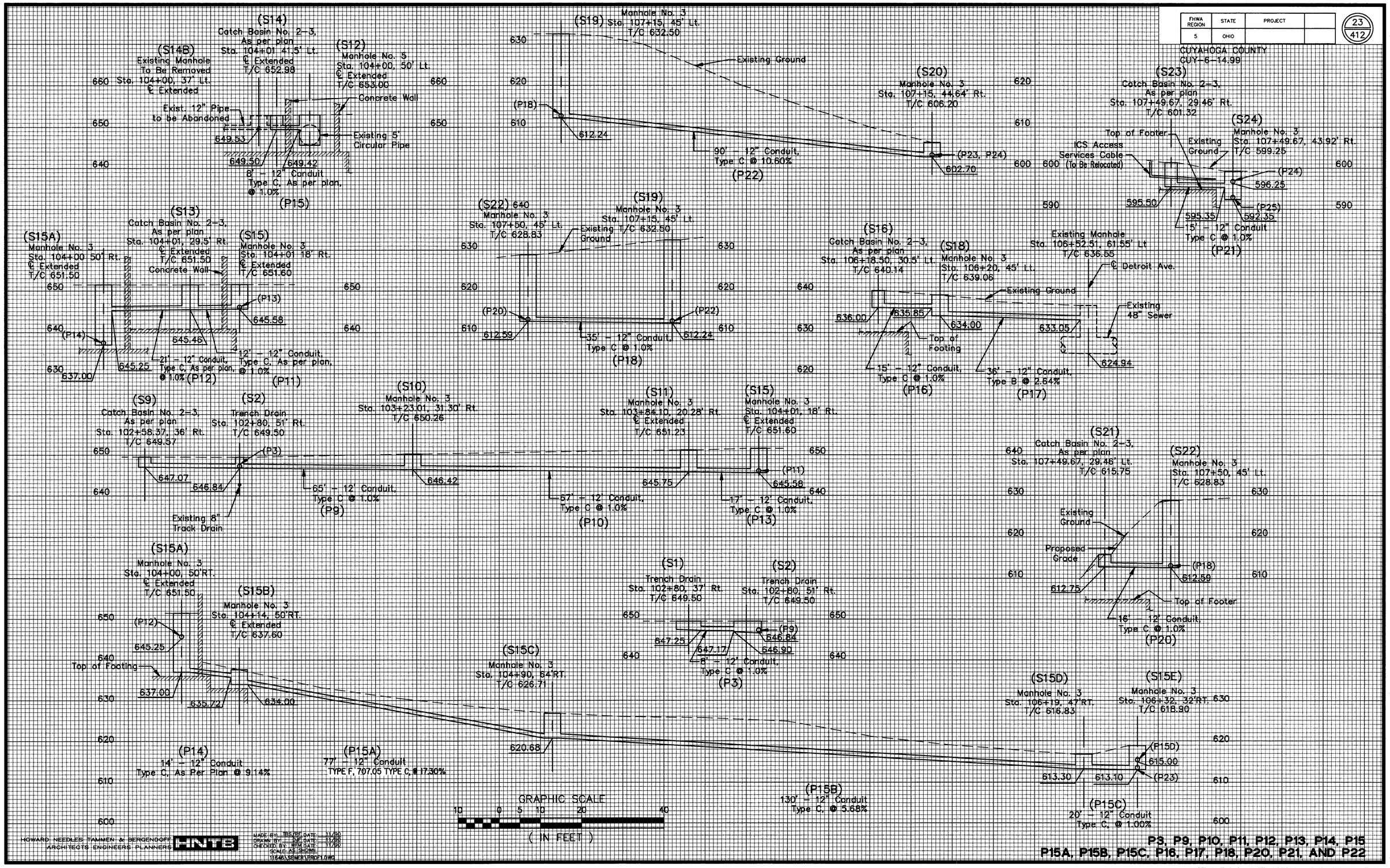

HOWARD, NEEDLES, TAMMEN & BERGENDOFF
ARCHITECTS ENGINEERS PLANNERS
HNTB

MADE BY: TBS/RF DATE: 11/90
DRAWN BY: DJF DATE: 11/90
CHECKED BY: MPM DATE: 11/90
SCALE: AS SHOWN
11646\SEWER\PROFL.DWG

P3, P9, P10, P11, P12, P13, P14, P15
P15A, P15B, P15C, P16, P17, P18, P20, P21, AND P22

STORM SEWER PROFILES

FHWA REGION	STATE	PROJECT	
5	OHIO		

CUYAHOGA COUNTY
CUY-6-14.99

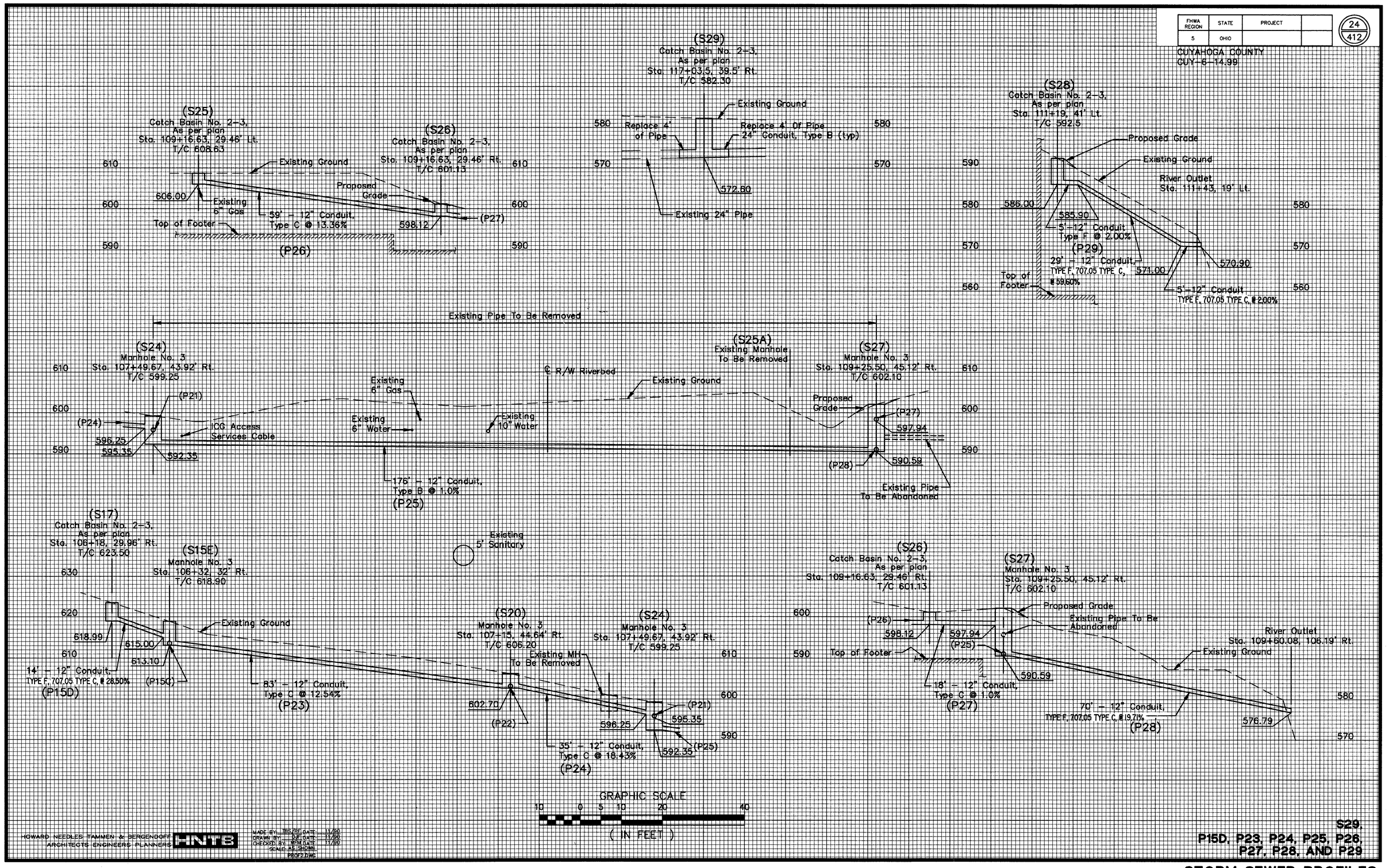

HOWARD, NEEDLES, TAMMEN & BERGENDOFF
ARCHITECTS ENGINEERS PLANNERS
HNTB

MADE BY: TBS/RF DATE: 11/90
DRAWN BY: DJE DATE: 11/90
CHECKED BY: MPM DATE: 11/90
SCALE: AS SHOWN
PROFZ.DWG

S29,
P15D, P23, P24, P25, P26,
P27, P28, AND P29

STORM SEWER PROFILES

FHWA REGION	STATE	PROJECT	
5	OHIO		

25
412

CUYAHOGA COUNTY
CUY-6-14.99

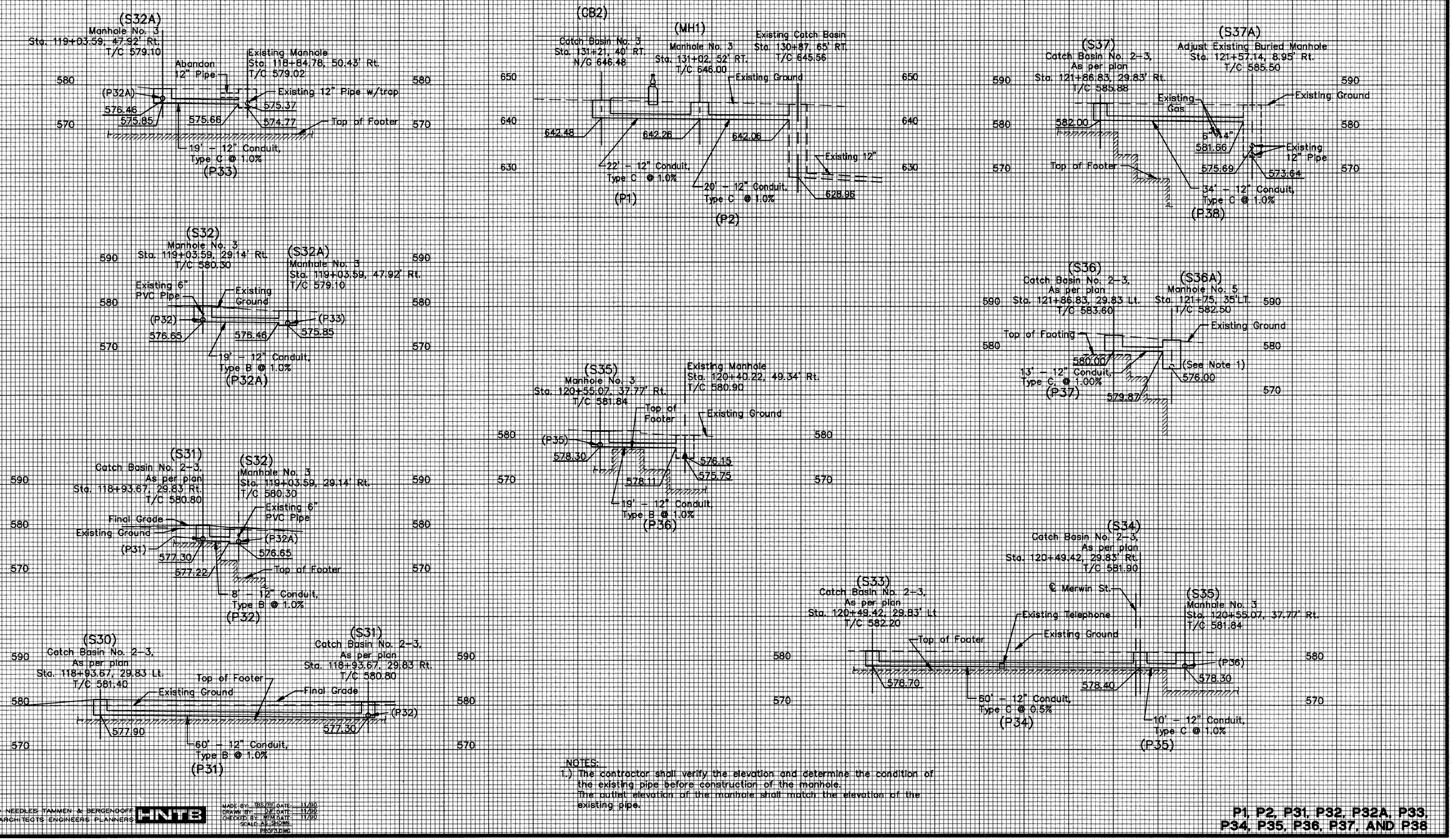

NOTES:
1.) The contractor shall verify the elevation and determine the condition of the existing pipe before construction of the manhole. The outlet elevation of the manhole shall match the elevation of the existing pipe.

HOWARD, NEEDLES, TAMMEN & BERGENDOFF
ARCHITECTS ENGINEERS PLANNERS
HNTB

MADE BY: TBS/RE DATE: 11/90
DRAWN BY: DJE DATE: 11/90
CHECKED BY: MPM DATE: 11/90
SCALE: AS SHOWN
PROF. DWG

P1, P2, P31, P32, P32A, P33, P34, P35, P36, P37, AND P38

STORM SEWER PROFILES

FHWA REGION	STATE	PROJECT	
5	OHIO		

CUYAHOGA COUNTY
CUY-6-14.99

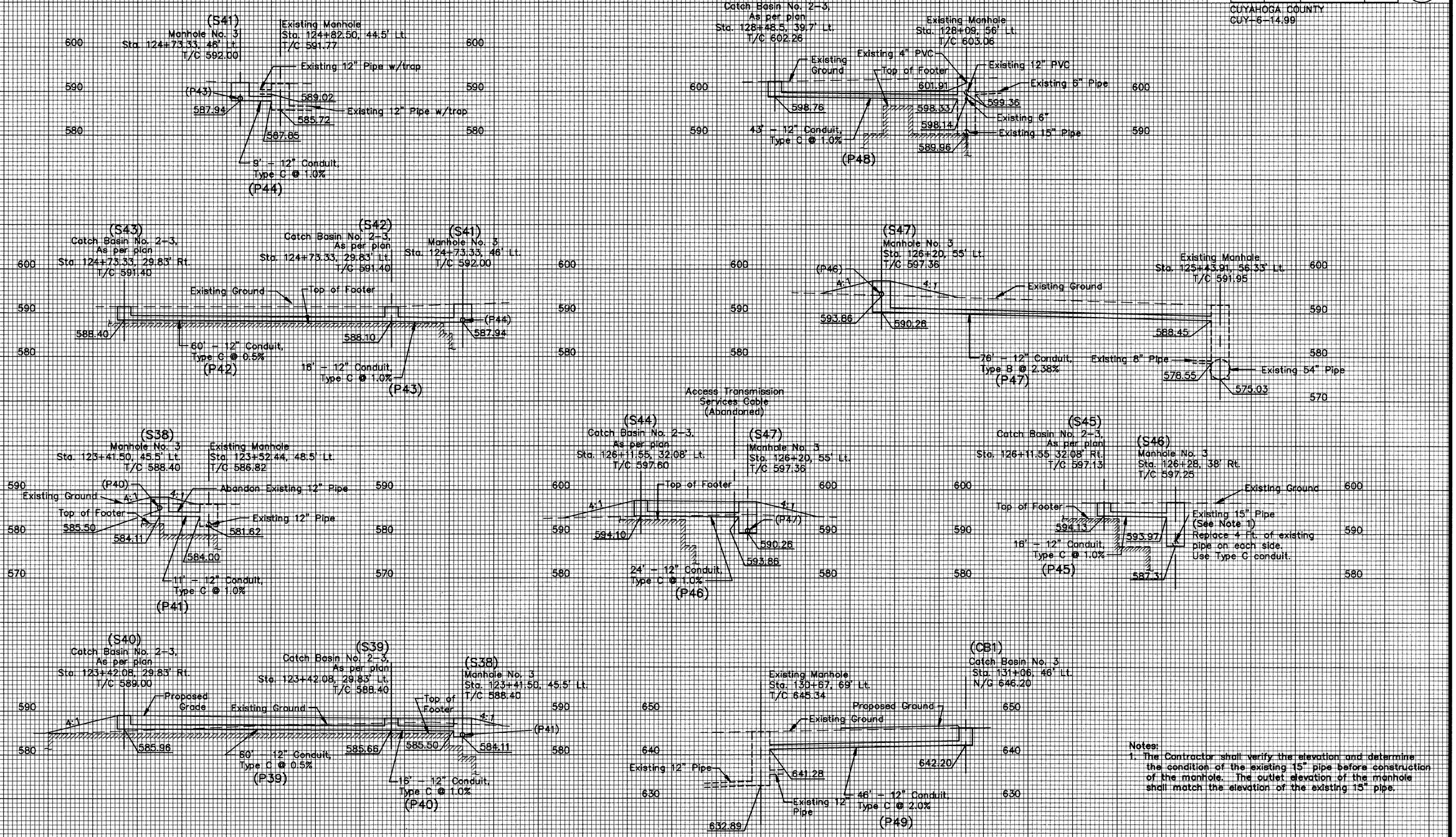

Notes:
1. The Contractor shall verify the elevation and determine the condition of the existing 15" pipe before construction of the manhole. The outlet elevation of the manhole shall match the elevation of the existing 15" pipe.

HOWARD NEEDLES TAMMEN & BERGENDOFF
ARCHITECTS ENGINEERS PLANNERS
HNTB

MADE BY: TBS/DF DATE: 11/90
DRAWN BY: DJF DATE: 11/90
CHECKED BY: WFM DATE: 11/90
SCALE: AS SHOWN
PROF4.DWG

P39, P40, P41, P42, P43, P44, P45, P46, P47, P48 and P49

STORM SEWER PROFILES

FHWA REGION	STATE	PROJECT	
5	OHIO		

27/412

CUYAHOGA COUNTY
CUY-6-14.99

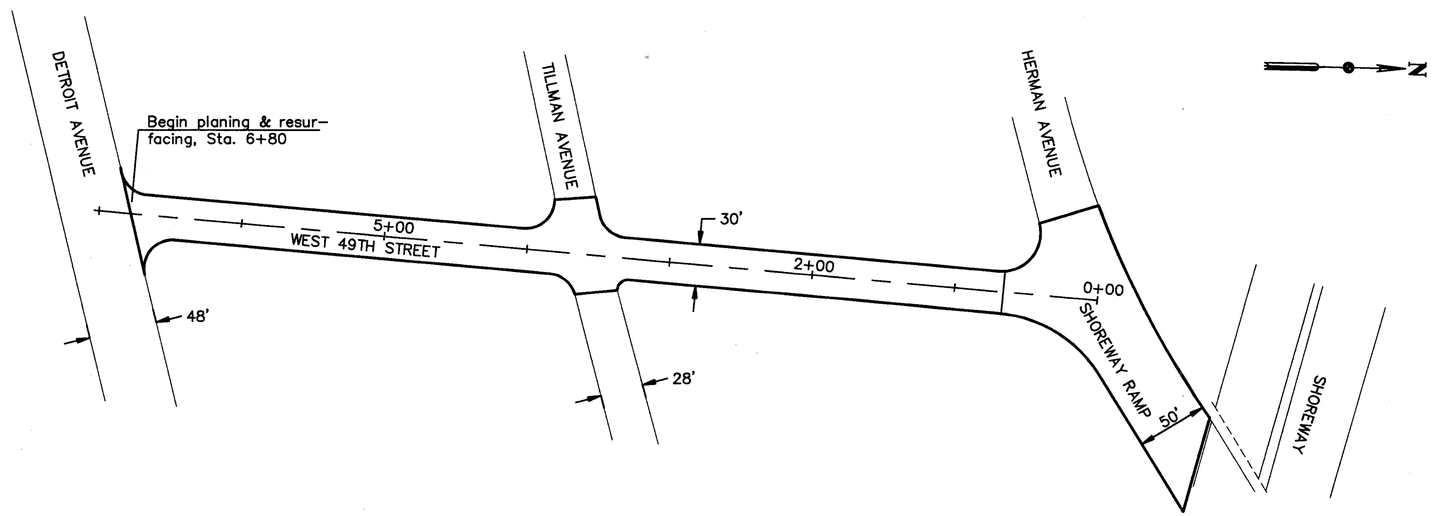

WEST 49th STREET

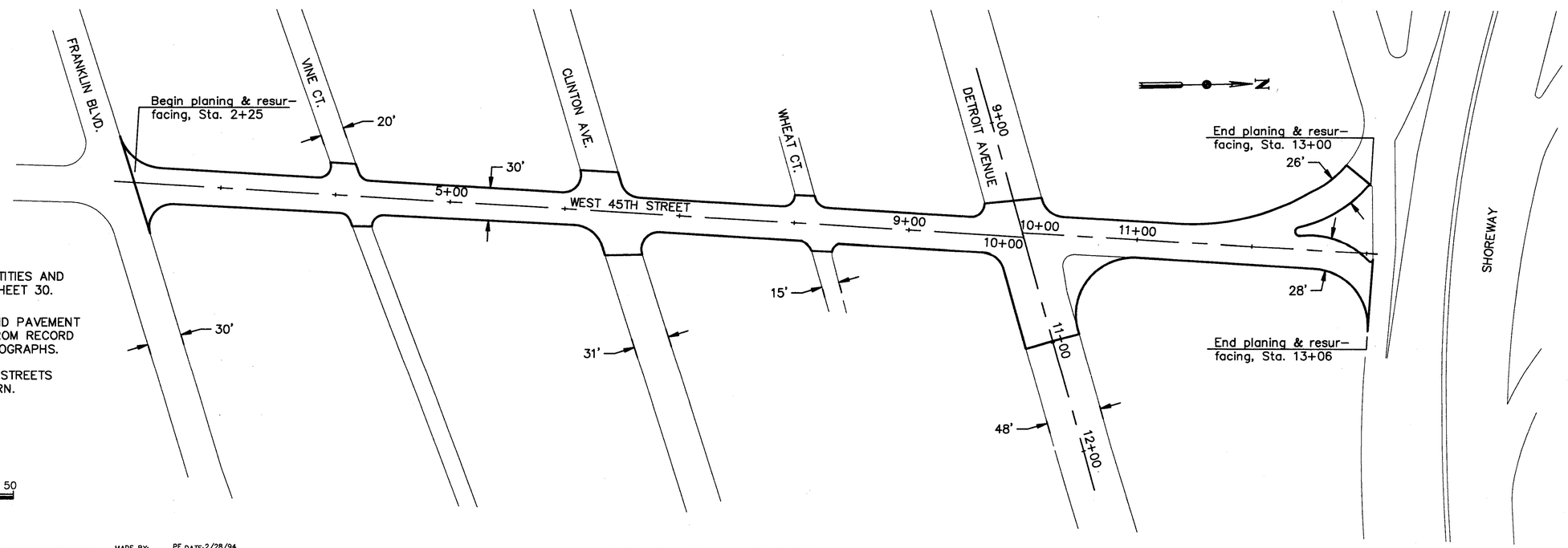

NOTES:

1.) FOR RESURFACING QUANTITIES AND TYPICAL SECTION, SEE SHEET 30.

2.) CENTERLINE STATIONS AND PAVEMENT WIDTHS ARE OBTAINED FROM RECORD PLANS AND AERIAL PHOTOGRAPHS.

3.) RESURFACING AT CROSS STREETS WILL END AT CURB RETURN.

GRAPHIC SCALE
50 0 25 50
HORIZONTAL SCALE IN FEET

WEST 45th STREET

HOWARD NEEDLES TAMMEN & BERGENDOFF
ARCHITECTS ENGINEERS PLANNERS
HNTB

MADE BY: PF DATE: 2/28/94
DRAWN BY: DJF DATE: 2/28/94
CHECKED BY: MJW DATE: 3/15/94
SCALE:
11646/PLAN/RESURF.DWG

RESURFACING PLAN

VETERANS-MEMORIAL BRIDGE DETOUR PLAN

FHWA REGION	STATE	PROJECT	
5	OHIO		

28
412

CUYAHOGA COUNTY
CUY-6-14.99

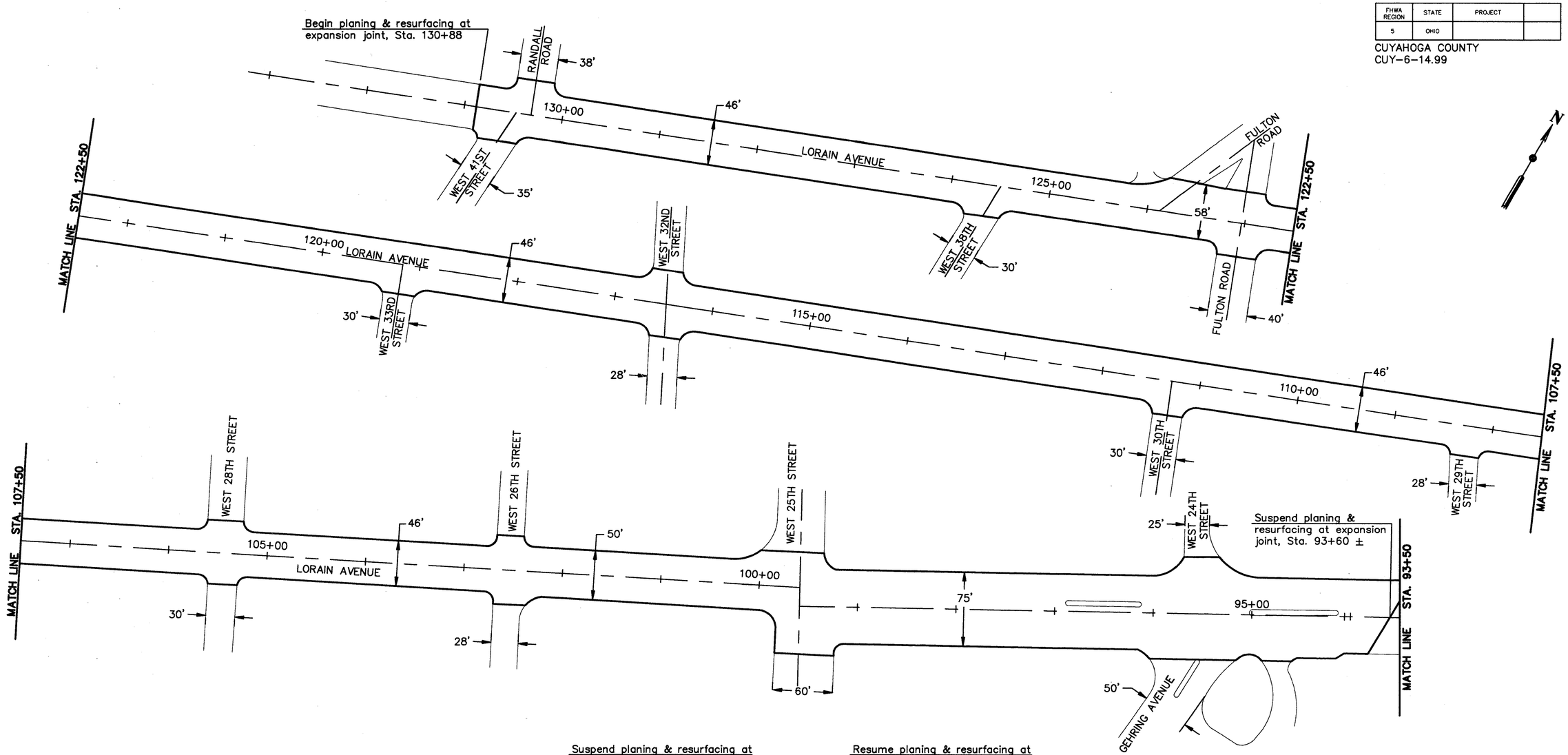

NOTES:

1.) FOR RESURFACING QUANTITIES AND TYPICAL SECTION, SEE SHEET 30.

2.) CENTERLINE STATIONS AND PAVEMENT WIDTHS ARE OBTAINED FROM RECORD PLANS AND AERIAL PHOTOGRAPHS.

3.) RESURFACING AT CROSS STREETS WILL END AT CURB RETURN.

GRAPHIC SCALE
50 0 25 50
HORIZONTAL SCALE IN FEET

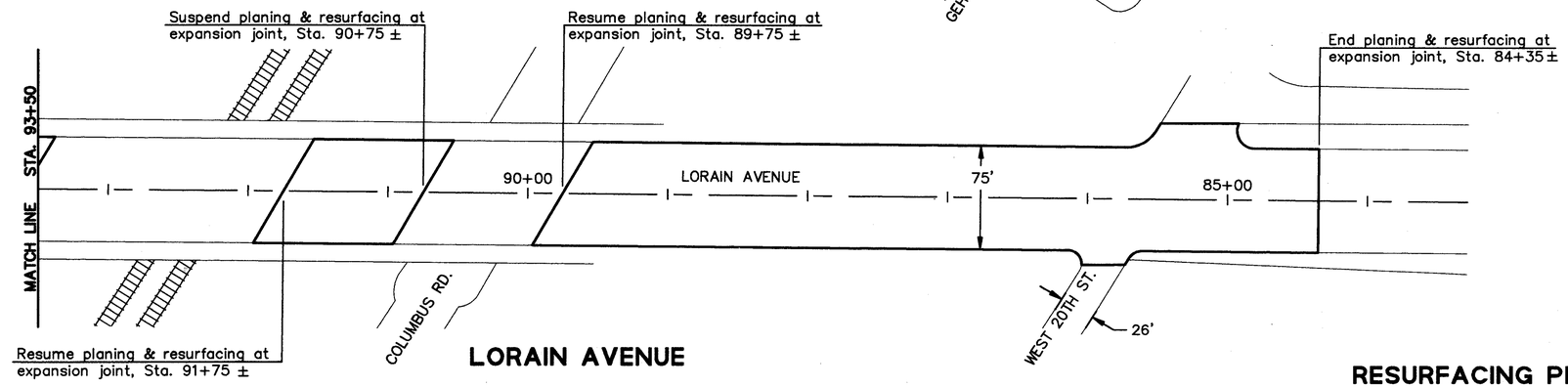

LORAIN AVENUE

HOWARD NEEDLES TAMMEN & BERGENDOFF
ARCHITECTS ENGINEERS PLANNERS
HNTB

MADE BY: PF DATE: 3/2/94
DRAWN BY: DJF DATE: 3/2/94
CHECKED BY: MJR DATE: 3/15/94
SCALE:
116465\PLAN\RESURF.DWG

RESURFACING PLAN

VETERANS-MEMORIAL BRIDGE DETOUR PLAN

FHWA REGION	STATE	PROJECT	
5	OHIO		

29
412

CUYAHOGA COUNTY
CUY-6-14.99

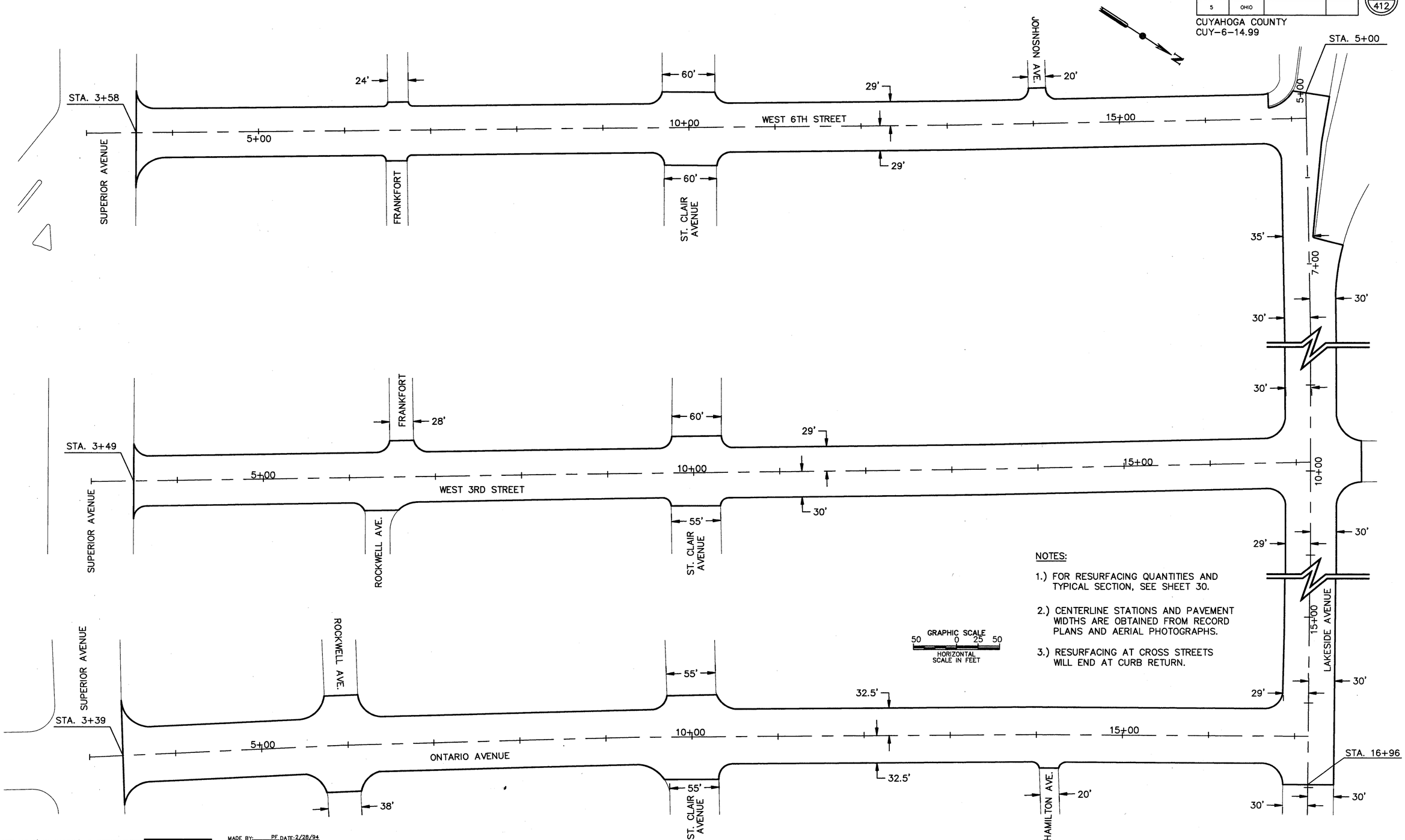

NOTES:

1.) FOR RESURFACING QUANTITIES AND TYPICAL SECTION, SEE SHEET 30.

2.) CENTERLINE STATIONS AND PAVEMENT WIDTHS ARE OBTAINED FROM RECORD PLANS AND AERIAL PHOTOGRAPHS.

3.) RESURFACING AT CROSS STREETS WILL END AT CURB RETURN.

HOWARD NEEDLES TAMMEN & BERGENDOFF
ARCHITECTS ENGINEERS PLANNERS HNTB

MADE BY: PF DATE: 2/28/94
DRAWN BY: DJF DATE: 2/28/94
CHECKED BY: MJW DATE: 3/15/94
SCALE:
11646/PLAN/RESURF.DWG

WEST 6th STREET, WEST 3rd STREET, ONTARIO AVENUE AND LAKESIDE AVENUE

RESURFACING PLAN

VETERANS-MEMORIAL BRIDGE DETOUR PLAN

FHWA REGION	STATE	PROJECT	
5	OHIO		

CUYAHOGA COUNTY
CUY-6-14.99

30
412

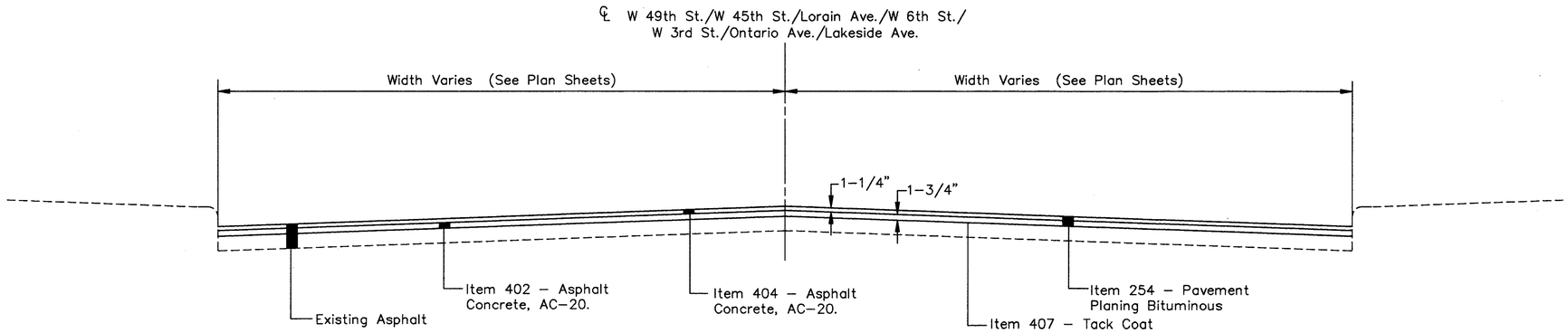

RESURFACING TYPICAL SECTION
NO SCALE

RESURFACING QUANTITIES (SEE NOTE 1)

LOCATION	STATION		LENGTH	WIDTH	AREA	254 PAVEMENT PLANING BITUMINOUS	407 TACK COAT	404 ASPHALT CONCRETE AC-20	402 ASPHALT CONCRETE AC-20
	FROM	TO	LIN. FT.	LIN. FT.	SQ. FT.	SQ. YD.	GAL.	CU. YD.	CU. YD.
W 6th ST. AT SUPERIOR	3+58	3+92			2232 *	248.0	24.8	8.6	12.1
W 6th ST.	3+92	6+41	249	58	14442	1604.7	160.5	55.7	78.0
W 6th ST. AT FRANKFORT	6+41	6+82			2699 *	299.9	30.0	10.4	14.6
W 6th ST.	6+82	9+54	272	58	15776	1752.9	175.3	60.9	85.2
W 6th ST. AT St. CLAIR	9+54	10+50			7535 *	837.2	83,7	29.1	40.7
W 6th ST.	10+50	13+83	333	58	19314	2146.0	214.6	74.5	104.3
W 6th ST. AT JOHNSON	13+83	14+27			2886 *	320.7	32.1	11.1	15.6
W 6th ST.	14+27	16+74	247	58	14326	1591.8	159.2	55.3	77.4
W 3rd ST. AT SUPERIOR	3+49	3+66			1094 *	121.6	12.2	4.2	5.9
W 3rd ST.	3+66	6+02	236	59	13924	1547.1	154.7	53.7	75.2
W 3rd ST. AT FRANKFORT/ROCKWELL	6+02	6+94			6387 *	709.7	71.0	24.6	34.5
W 3rd ST.	6+94	9+58	264	59	15576	1730.7	173.1	60.1	84.1
W 3rd ST. AT St. CLAIR	9+58	10+45			6588 *	732.0	73.2	25.4	35.6
W 3rd ST.	10+45	16+65	620	59	36580	4064.4	406.4	141.1	197.6
ONTARIO AVE. AT SUPERIOR	3+39	3+73			2659 *	295.4	29.5	10.3	14.4
ONTARIO AVE.	3+73	5+43	170	65	11050	1227.8	122.8	42.6	59.7
ONTARIO AVE. AT ROCKWELL	5+43	6+41			9005 *	1000.6	100.1	34.7	48.6
ONTARIO AVE.	6+41	9+37	296	65	19240	2137.8	213.8	74.2	103.9
ONTARIO AVE AT St CLAIR	9+37	10+53			10037 *	1115.2	111.5	38.7	54.2
ONTARIO AVE.	10+53	13+95	342	65	22230	2470.0	247.0	85.8	120.1
ONTARIO AV. AT HAMILTON	13+95	14+35			2799 *	311.0	31.1	10.8	15.1
ONTARIO AVE.	14+35	16+63	228	65	14820	1646.7	164.7	57.2	80.0
LAKESIDE AVE. AT W6th/EXIT RAMP	5+00	6+69			8120 *	902.2	90.2	31.3	43.9
LAKESIDE AVE. AT EXIT RAMP	6+69	7+38			4273 *	474.8	47.5	16.5	23.1
LAKESIDE AVE.	7+38	9+35	197	60	11820	1313.3	131.3	45.6	63.8
LAKESIDE AVE AT W 3rd	9+35	10+40			9656 *	1072.9	107.3	37.3	52.2
LAKESIDE AVE.	10+40	15+83	543	59	32037	3559.7	356.0	123.6	173.0
LAKESIDE AVE. AT ONTARIO	15+83	16+97			8506 *	945.1	94.5	32.8	45.9
TOTALS:						36179	3618	1256	1759

* AREA BY PLANIMETER

NOTES:

1) THE QUANTITIES SHOWN ON THIS SHEET ARE PROVIDED TO RESTORE THE VARIOUS STREETS, UTILIZED FOR DETOUR PURPOSES, TO A CONDITION THAT IS EQUIVALENT TO THAT WHICH EXISTED PRIOR TO THEIR USE FOR DETOUR PURPOSES. ALL WORK SHALL BE PERFORMED AS DIRECTED BY THE ENGINEER AND ALL QUANTITIES ARE SUBJECT TO NON-PERFORMANCE.

RESURFACING QUANTITIES (SEE NOTE 1)

LOCATION	STATION		LENGTH	WIDTH	AREA	254 PAVEMENT PLANING BITUMINOUS	407 TACK COAT @ 0.1 GAL/SY	404 ASPHALT CONCRETE AC-20	402 ASPHALT CONCRETE AC-20
	FROM	TO	LIN. FT.	LIN. FT.	SQ. FT.	SQ. YD.	GAL.	CU. YD.	CU. YD.
LORAIN AVE. AT W41st	130+88	130+00			4957 *	550.8	55.1	19.1	26.8
LORAIN AVE.	130+00	125+93	407	46	18722	2080.2	208.0	72.2	101.1
LORAIN AVE. AT W38th	125+93	125+32			3208 *	356.4	35.6	12.4	17.3
LORAIN AVE.	125+32	124+26	106	46	4876	541.8	54.2	18.8	26.3
LORAIN AVE. AT FULTON	124+26	122+70			8904 *	989.3	98.9	34.4	48.1
LORAIN AVE.	122+70	119+45	325	46	14950	1661.1	166.1	57.7	80.7
LORAIN AVE. AT W33rd	119+45	118+89			2894 *	321.6	32.2	11.2	15.6
LORAIN AVE.	118+89	116+83	206	46	9476	1052.9	105.3	36.6	51.2
LORAIN AVE. AT W32nd	116+83	116+13			4073 *	452.6	45.3	15.7	22.0
LORAIN AVE.	116+13	111+57	456	46	20976	2330.7	233.1	80.9	113.3
LORAIN AVE. AT W30th	111+57	111+00			3078 *	342.0	34.2	11.9	16.6
LORAIN AVE.	111+00	108+48	252	46	11592	1288.0	128.8	44.7	62.6
LORAIN AVE. AT W29th	108+48	108+00			2491 *	276.8	27.7	9.6	13.4
LORAIN AVE.	108+00	105+71	229	46	10534	1170.4	117.0	40.6	56.9
LORAIN AVE. AT W28th	105+71	105+15			3314 *	368.2	36.8	12.8	17.9
LORAIN AVE.	105+15	102+78	237	46	10902	1211.3	121.1	42.1	58.9
LORAIN AVE. AT W26th	102+78	102+18			3668 *	407.6	40.8	14.2	19.8
LORAIN AVE.	102+18	100+36	182	50	9100	1011.1	101.1	35.1	49.2
LORAIN AVE. AT W25th	100+36	99+14			9734 *	1081.6	108.2	37.6	52.6
LORAIN AVE.	99+14	96+89	225	75	16875	1875.0	187.5	65.1	91.1
LORAIN AVE. AT W24th & GEHRING AVE. INTERSECTION	96+89	94+13			22474 *	2497.1	249.7	86.7	121.4
LORAIN AVE.	94+13	94+06	7	80 , 75	543	60.3	6.0	2.1	2.9
LORAIN AVE.	94+06	93+60	46	75	3450	383.3	38.3	13.3	18.6
LORAIN AVE.	91+75	90+75	100	75	7500	833.3	83.3	28.9	40.5
LORAIN AVE.	89+75	86+15	360	75	27000	3000.0	300.0	104.2	145.8
LORAIN AVE.AT W20th ST.	86+15	84+35			14979 *	1664.3	166.4	57.8	80.9
W49th AT HERMAN AVE.	—	0+66			11599 *	1288.8	128.9	44.8	62.7
W 49th ST.	0+66	3+27	261	30	7830	870.0	87.0	30.2	42.3
W49th AT TILLMAN AVE.	3+27	4+06			3677 *	408.6	40.9	14.2	19.9
W 49th ST.	4+06	6+47	241	30	7230	803.3	80.3	27.9	39.1
W49th AT DETROIT AVE.	6+47	6+78			1121 *	124.6	12.5	4.3	6.0
W45th AT FRANKLIN BLVD.	2+25	2+55			1241 *	137.9	13.8	4.8	6.7
W 45th ST.	2+55	3+85	130	30	3900	433.3	43.3	15.0	21.1
W45th AT VINE CT.	3+85	4+40			2225 *	247.2	24.7	8.6	12.0
W 45th ST.	4+40	5+97	157	30	4710	523.3	52.3	18.2	25.4
W54th AT CLINTON AVE.	5+97	6+80			4067 *	451.9	45.2	15.7	22.0
W 45th ST.	6+80	7+90	110	30	3300	366.7	36.7	12.7	17.8
W45th AT WHEAT CT.	7+90	8+40			1897 *	210.8	21.1	7.3	10.2
W 45th ST.	8+40	9+56	116	30	3480	386.7	38.7	13.4	18.8
W45th AT DETROIT AVE.	9+56	11+00			10361 *	1151.2	115.1	40.0	56.0
W 45th ST.	11+00	11+50	50	30	1500	166.7	16.7	5.8	8.1
W45th & SHOREWAY	11+50	13+06			7509 *	834.3	83.4	29.0	40.6
TOTALS:						36213	3621	1257	1760

HOWARD NEEDLES TAMMEN & BERGENDOFF
ARCHITECTS ENGINEERS PLANNERS
HNTB

MADE BY: PF DATE: 3/94
DRAWN BY: MJG DATE: 3/94
CHECKED BY: MJW DATE: 3/94
SCALE:
11646\TYPSEC\TYPICAL3.DWG

TYPICAL SECTION AND RESURFACING QUANTITIES

VETERANS MEMORIAL BRIDGE DETOUR PLAN

MAINTENANCE OF TRAFFIC NOTES

FHWA REGION	STATE	PROJECT	
5	OHIO		

31
412

CUYAHOGA COUNTY
CUY–6–14.99

GENERAL

BEFORE WORK BEGINS, THE CONTRACTOR SHALL SUBMIT TO THE ENGINEER THE NAMES AND TELEPHONE NUMBERS OF AT LEAST TWO PERSONS WHO CAN BE CONTACTED 24 HOURS PER DAY BY THE OHIO DEPARTMENT OF TRANSPORTATION AND ALL INTERESTED POLICE AGENCIES. THE CONTRACTOR SHALL BE RESPONSIBLE FOR PLACING OR REPLACING NECESSARY TRAFFIC CONTROL DEVICES TO MAINTAIN THE TRAVELED PAVEMENT SAFELY. THE MAKING OF THIS IMPROVEMENT REQUIRES THAT THE VETERANS MEMORIAL BRIDGE BE CLOSED TO THRU TRAFFIC. DETOURS SHALL BE AS SHOWN ON SHEETS 73–87. DETOUR ROUTE CONSTRUCTION IS BEING COMPLETED UNDER A SEPARATE CONSTRUCTION PROJECT SOLD BY THE CUYAHOGA COUNTY ENGINEER'S OFFICE. IMPLEMENTATION AND MAINTENANCE OF THE DETOUR ROUTES AND TRAFFIC CONTROL DEVICES INCLUDING SIGNS, SIGNALS, ETC. IS A PART OF THIS PROJECT.

THE CONTRACTOR SHALL DIVERT TRAFFIC FROM NORMAL CHANNELS BY USING PLASTIC DRUMS, PORTABLE CONCRETE BARRIER, FLASHING ARROW PANELS COMPLYING WITH TC–35.10, AND PROVIDING TRAFFIC SIGNS AND PAVEMENT MARKINGS, AS SHOWN ON SHEETS 37– 43, 43A-43D, AND 44.

ALL CONSTRUCTION TRAFFIC CONTROL DEVICES USED FOR THIS PROJECT SHALL CONFORM TO THE OHIO MANUAL ON TRAFFIC CONTROL DEVICES, ALSO KNOWN AS THE "MANUAL", AND SHALL BE FURNISHED, ERECTED, MAINTAINED, AND REMOVED BY THE CONTRACTOR, EXCEPT AS NOTED BELOW.

ALL PREVIOUSLY ERECTED DETOUR SIGNING, SHOWN IN THESE PLANS SHALL BE UNCOVERED, MAINTAINED, AND REMOVED FOR STORAGE BY THE CONTRACTOR. THE SIGNS SHALL BE PICKED UP BY AND BECOME THE PROPERTY OF CUYAHOGA COUNTY.

THE CONTRACTOR SHALL FURNISH AND MAINTAIN ALL NECESSARY SAFEGUARDS, SUCH AS BARRICADES, LIGHTING, FLAGGERS, AND SUCH OTHER TRAFFIC CONTROL AS PROVIDED IN ITEM 614, MAINTAINING TRAFFIC, SO AS TO AVOID DAMAGE AND/OR INJURY TO VEHICLES AND PERSONS USING THE ROADWAY DURING CONSTRUCTION.

EXISTING TRAFFIC CONTROL DEVICES (SIGNS AND/OR TRAFFIC SIGNALS), LOCATED WITHIN THE WORK AREA, WHICH ARE REQUIRED FOR INTERIM OR PERMANENT TRAFFIC CONTROL, SHALL BE RELOCATED TO POINTS APPROVED BY THE ENGINEER. APPROPRIATE TRAFFIC CONTROL DEVICES SHALL BE MAINTAINED, IN COMPLIANCE WITH THE MANUAL, AT ALL TIMES WHILE TRAFFIC IS MAINTAINED. THE COST OF RELOCATION, IF REQUIRED, SHALL BE INCLUDED IN THE LUMP SUM PRICE BID FOR ITEM 614 – MAINTAINING TRAFFIC.

ANY EXISTING SIGNS THAT CONFLICT WITH THE MAINTENANCE OF TRAFFIC SCHEME SHALL BE REMOVED AND REERECTED AT A LATER DATE OR COVERED. WHERE THE PLANS CALL FOR A PERMANENT SIGN TO BE COVERED, THE CONTRACTOR SHALL DO SO IN SUCH A MANNER SO AS TO AVOID DAMAGING THE PERMANENT SIGN WHEN THE COVER IS REMOVED. THE COVER SHALL BE TOTALLY OPAQUE. THE USE OF ADHESIVE TAPE APPLIED DIRECTLY TO A SIGN FACE IS STRICTLY PROHIBITED.

TRAFFIC CONTROL DEVICES SHALL BE SET UP PRIOR TO THE START OF CONSTRUCTION, AND SHALL BE PROPERLY MAINTAINED DURING THE TIME SUCH SPECIAL CONDITIONS EXIST. THEY SHALL REMAIN IN PLACE ONLY AS LONG AS THEY ARE NEEDED AND SHALL BE IMMEDIATELY REMOVED THEREAFTER. WHERE OPERATIONS ARE PERFORMED IN STAGES, THERE SHALL BE IN PLACE ONLY THOSE DEVICES THAT APPLY TO THE CONDITION PRESENT DURING THE STAGE IN PROGRESS. ALL SIGNS WITH MESSAGES WHICH DO NOT APPLY DURING A CERTAIN PERIOD SHALL BE COVERED OR SET ASIDE OUT OF THE VIEW OF TRAFFIC.

VETERANS MEMORIAL BRIDGE DETOUR PLANS

A COMPLETE SET OF THE VETERANS MEMORIAL BRIDGE DETOUR PLANS IS AVAILABLE AT THE CUYAHOGA COUNTY ENGINEER'S OFFICE. A PARTIAL SET OF THE DETOUR PLANS HAS BEEN INCLUDED IN THIS SET, SHEETS 73–87. THE VETERANS MEMORIAL BRIDGE REHABILITATION CONTRACTOR IS RESPONSIBLE FOR PERFORMING ALL WORK DETAILED ON THESE SHEETS.

NOTIFICATION

THE CONTRACTOR SHALL NOTIFY IN WRITING THE FOLLOWING AGENCIES AT LEAST FOURTEEN CALENDAR DAYS PRIOR TO ANY TRAFFIC RESTRICTIONS, AND AT LEAST 72 HOURS BEFORE IMPLEMENTING ANY SIGNIFICANT CHANGE IN TRAFFIC PATTERNS.

THE CUYAHOGA COUNTY ENGINEER
THE GREATER CLEVELAND REGIONAL TRANSIT AUTHORITY
THE NORTH OLMSTED MUNICIPAL BUS LINE
THE CUYAHOGA COUNTY BOARD OF MENTAL RETARDATION
THE CLEVELAND BOARD OF EDUCATION
THE CITY OF CLEVELAND COMMISSIONER OF TRAFFIC ENGINEERING, POLICE TRAFFIC COMMISSIONER, AND COMMISSIONER OF ENGINEERING AND CONSTRUCTION

PHASING OF CONSTRUCTION

PHASING OF CONSTRUCTION AS IT APPEARS IN THESE PLANS IS INTENDED TO PROVIDE FOR THE COMPLETION OF ALL WORK IN CONJUNCTION WITH THE CLOSING OF THE VETERANS MEMORIAL BRIDGE AS DETAILED IN THE "CONSTRUCTION SEQUENCE" ON SHEET 34.

THE BRIDGE WILL NOT BE CLOSED UNTIL ALL WORK NECESSARY FOR THE IMPLEMENTATION OF THE DETOUR ROUTES HAS BEEN PERFORMED, UNDER SEPARATE CONTRACT, BY THE DETOUR ROUTE CONTRACTOR. ALL CONSTRUCTION PERFORMED ON THE TUNNELS AND ROADWAYS SHALL BEGIN ONCE THE BRIDGE HAS BEEN CLOSED AND SHALL BE COMPLETED UNDER SEPARATE INTERIM COMPLETION DATES, AS DETAILED IN THE "CONSTRUCTION SEQUENCE" BEFORE THE BRIDGE IS REOPENED.

THE CONTRACTOR SHALL COMPLETE ALL WORK IN A GIVEN CONSTRUCTION PHASE BEFORE BEGINNING ANY WORK IN A SUBSEQUENT PHASE, UNLESS OTHERWISE APPROVED BY THE ENGINEER. NORMAL VEHICULAR TRAFFIC SHALL BE MAINTAINED AT ALL TIMES BEYOND THE WORK LIMITS OF THE SECTION CURRENTLY UNDER CONSTRUCTION.

ABUTTING PROPERTIES

THE CONTRACTOR SHALL MAINTAIN SAFE AND SATISFACTORY ACCESS TO ALL ABUTTING PROPERTIES. WHERE CALLED FOR IN THE PLANS, THE CONTRACTOR SHALL REMOVE AND REPLACE ALL TWO LANE DRIVES IN TWO PHASES MAINTAINING 12 FEET OF WIDTH ON TEMPORARY DRIVES SO THAT INGRESS AND EGRESS CAN BE MAINTAINED. COMMERCIAL DRIVES MAY ONLY BE CLOSED IF OTHER ACCESS DRIVES ARE AVAILABLE. THE CONTRACTOR MUST NOTIFY IN WRITING ALL PROPERTY OWNERS OF ACCESS RESTRICTIONS ONE WEEK IN ADVANCE. ALL RESTRICTIONS AND CLOSURES SHALL BE PROPERLY SIGNED AND/OR BARRICADED.

EQUIPMENT AND MATERIAL STORAGE

IN ORDER TO PROVIDE FOR THE SAFETY OF THE TRAVELING PUBLIC THE CONTRACTOR'S ATTENTION IS DIRECTED TO THE PROVISIONS OF SECTION 614.03. IN ADDITION THE FOLLOWING PROVISIONS SHALL APPLY:

1. STORED OR PARKED VEHICLES, MATERIALS AND EQUIPMENT SHALL BE LOCATED BEHIND THE DRUM LINE WITHIN THE WORK AREA.
2. ANY REMOVED ITEMS SHALL NOT BE STORED ON THE RIGHT OF WAY FOR MORE THAN 30 DAYS.
3. ALL DISTURBED AREAS SHALL BE RETURNED TO THEIR ORIGINAL CONDITION AT NO EXPENSE TO THE STATE.

CONSTRUCTION TRAFFIC

ALL CONSTRUCTION TRAFFIC SHALL USE ACCEPTABLE TRUCK ROUTES TO ACCESS THE CONSTRUCTION AREA. USE OF LOCAL RESIDENTIAL STREETS IS STRICTLY PROHIBITED UNLESS ALLOWED IN WRITING BY THE LOCAL ENFORCEMENT AGENCY.

WORK LIMITS

THE WORK LIMITS SHOWN ON THESE PLANS ARE FOR PHYSICAL CONSTRUCTION ONLY. THE INSTALLATION, AND OPERATION (INCLUDING ERECTION, MAINTENANCE AND REMOVAL) OF ALL TEMPORARY TRAFFIC CONTROL AND TEMPORARY TRAFFIC CONTROL DEVICES REQUIRED BY THESE PLANS, EXCEPT WHERE OTHERWISE NOTED, SHALL BE PROVIDED BY THE CONTRACTOR WHETHER INSIDE OR OUTSIDE THESE WORK LIMITS.

FLASHING ARROW PANELS AND VARIABLE MESSAGE BOARDS

WHEN FLASHING ARROW PANELS OR VARIABLE MESSAGE SIGN BOARDS ARE SHOWN ON THE PLANS, SOLAR, ELECTRIC, OR BATTERY POWERED EQUIPMENT SHALL BE EXCLUSIVELY UTILIZED WHEN LOCATED WITHIN 300 FEET OF ANY RESIDENCE. DIESEL OR GASOLINE POWERED GENERATORS WILL NOT BE PERMITTED IN THESE AREAS, EXCEPT WHEN USED INTERMITTENTLY FOR THE SOLE PURPOSE OF CHARGING INTERNAL BATTERIES WHICH PROVIDE THE PRIMARY POWER FOR THE EQUIPMENT.

TRAFFIC CONTROL DEVICES LOCATED OUTSIDE OF THE LIMITS OF CONSTRUCTION

IN ADDITION TO THE REQUIREMENTS OF 614.03(B) OF THE OHIO DEPARTMENT OF TRANSPORTATION MANUAL OF CONSTRUCTION MATERIALS AND SPECIFICATIONS, THE CONTRACTOR SHALL UNCOVER, MAINTAIN AND SUBSEQUENTLY REMOVE AND STORE FOR PICK–UP BY THE CUYAHOGA COUNTY ENGINEER'S OFFICE FORCES SUCH ADDITIONAL TRAFFIC CONTROL DEVICES PLACED UNDER THE DETOUR CONTRACT AND LOCATED OUTSIDE OF THE LIMITS OF CONSTRUCTION AS ARE REQUIRED ON ROADS WHICH ARE USED AS DETOURS. THE CONTRACTOR SHALL ALSO BE RESPONSIBLE FOR FURNISHING, ERECTING, MAINTAINING AND SUBSEQUENTLY REMOVING ANY SUCH SIGNS, SIMILAR TO THOSE MENTIONED ABOVE, AS SHOWN IN THESE PLANS. THIS INCLUDES THE BRIDGE AND ROAD CLOSED SIGNS UPON THE BARRICADES AT THE POINTS WHERE THE BRIDGE IS CLOSED.

TEMPORARY MAINTENANCE OF EXISTING TRAFFIC SIGNALS

INCIDENTAL TO THE REQUIREMENTS FOR MAINTAINING TRAFFIC IN ACCORDANCE WITH 614.03, EXISTING TRAFFIC SIGNALS AT THE FOLLOWING INTERSECTIONS SHALL BE TEMPORARILY MODIFIED UNTIL THE PROJECT IS COMPLETE AND THE NEW SIGNAL INSTALLATION IS IN OPERATION, OR UNTIL THE EXISTING OPERATION CAN BE RESTORED:

MODIFY EXISTING SIGNALS FOR MAINTENANCE OF TRAFFIC

–DETROIT AVE./WEST 28TH ST.
THIS SIGNAL SHALL BE MODIFIED DURING PHASES II AND IIA AS SHOWN ON SHEET 39.

–DETROIT AVE./WEST 25TH ST.
THE EXISTING SIGNALS SHALL BE REVISED DURING CONSTRUCTION AS SHOWN IN THE MAINTENANCE OF TRAFFIC PLANS, SHEET 39; THEN THE NEW SIGNALS SHALL BE INSTALLED AS SHOWN ON THE TRAFFIC CONTROL PLANS.

–WEST 9TH ST./SUPERIOR AVE./HURON RD.
THIS INTERSECTION SHALL OPERATE UNDER STOP SIGN CONTROL DURING THE PHASE III MAINTENANCE OF TRAFFIC. ONCE WORK IS COMPLETED AT THE INTERSECTION, THE SIGNAL SHALL OPERATE AS DETAILED ON SHEET 42. NEW SIGNALS SHALL BE INSTALLED AS PER THE TRAFFIC CONTROL PLANS.

INSURE PROPER DETOUR PHASING AND TIMING IS IN PLACE
–DETROIT AVE./WEST 45TH ST.
–ONTARIO ST./HURON RD.
–ONTARIO ST./EAGLE AVE./EAST 4TH ST.
–EAST 4TH ST./CARNEGIE AVE./COMMERCIAL AVE.
–ONTARIO ST./CARNEGIE AVE.

THE EXISTING SIGNAL HEADS (OR ADDITIONAL TRAFFIC SIGNAL HEADS SUPPLIED BY THE CONTRACTOR) SHALL BE POSITIONED TO PROVIDE A MINIMUM OF TWO TRAFFIC SIGNAL HEADS OVER THE PORTION OF THE ROADWAY USED BY EACH DIRECTION OF TRAFFIC, AS SHOWN ON THE PLANS, AND THE OPERATION SHALL BE MODIFIED AS SHOWN ON THE PLANS. THE NUMBER, LOCATION, VISIBILITY, AND HEIGHT OF ALL TRAFFIC SIGNALS SHALL BE IN ACCORDANCE WITH THE PROVISIONS OF THE "MANUAL."

THE DETOUR ROUTE PHASING AND TIMING FOR THE SIGNALS AT ONTARIO/HURON, ONTARIO/EAST 4TH/EAGLE, ONTARIO/CARNEGIE, AND EAST 4TH/CARNEGIE/COMMERCIAL HAS ALREADY BEEN ACTIVATED BY THE CITY OF CLEVELAND DIVISION OF TRAFFIC ENGINEERING UNDER ANOTHER CONTRACT, ALTHOUGH THE TIMING MAY HAVE BEEN SLIGHTLY MODIFIED TO FIT CONDITIONS PRIOR TO THE ACTUAL ACTIVATION OF THE DETOUR. THE CONTRACTOR SHALL WORK WITH THE CITY TO ACTIVATE THE PROPER PREPROGRAMMED DETOUR TIMING FROM THE CENTRAL OFFICE LOCATION. ANY COSTS FOR THE TEMPORARY MAINTENANCE OF EXISTING TRAFFIC SIGNALS SHALL BE INCLUDED IN THE LUMP SUM BID FOR ITEM 614 – MAINTAINING TRAFFIC.

MAINTENANCE OF TRAFFIC UNDER THE STRUCTURE

ALL PEDESTRIANS, BOATS, AND VEHICULAR TRAFFIC SHALL BE MAINTAINED UNDERNEATH THE BRIDGE UNLESS OTHERWISE DETAILED IN THE PLANS. THE CONTRACTOR SHALL MAKE PROVISIONS TO SAFEGUARD ALL PEDESTRIANS, BOATERS, AND VEHICULAR TRAFFIC AGAINST OVERHEAD CONSTRUCTION. DEMOLITION AND/OR DECK REMOVAL OF THE BRIDGE MAY REQUIRE THE COMPLETE STOPPAGE OF TRAFFIC BELOW THE BRIDGE. ANY SUCH CLOSURE SHALL REQUIRE THE NOTIFICTION OF THE CLEVELAND POLICE DEPARTMENT FOR VEHICULAR AND PEDESTRIAN TRAFFIC AND THE COAST GUARD FOR CONTROL OVER BOAT TRAFFIC. COMPLETE STOPPAGE OF TRAFFIC SHALL NOT OCCUR BETWEEN THE HOURS OF 6–9 AM OR 3–6 PM ON WEEKDAYS, FROM 3 PM FRIDAY TO 9 AM MONDAY ON WEEKENDS, OR OVER HOLIDAYS OR SPECIAL EVENTS. THE CONTRACTOR SHALL USE FLAGGERS TO STOP VEHICULAR AND PEDESTRIAN TRAFFIC. ANY COST FOR MAINTAINING TRAFFIC UNDER THE STRUCTURE SHALL BE PAID FOR UNDER ITEM 614 – MAINTAINING TRAFFIC.

NOTICE OF CLOSURE SIGNS

NOTICE OF CLOSURE SIGNS (OC–60), AS DETAILED ON THE NEXT SHEET, SHALL BE ERECTED BY THE CONTRACTOR AT LEAST ONE WEEK IN ADVANCE OF THE SCHEDULED BRIDGE CLOSURE. THE SIGNS SHALL BE ERECTED ON THE WEST END OF THE BRIDGE AT STATION 101+00± AND AT STATION 130+00± ON THE EAST END OF THE BRIDGE. THEY SHALL BE PLACED SO AS NOT TO INTERFERE WITH THE VISIBILITY OF ANY OTHER TRAFFIC CONTROL SIGNS.

MAINTENANCE OF TRAFFIC NOTES

FHWA REGION	STATE	PROJECT	
5	OHIO		

CUYAHOGA COUNTY
CUY-6-14.99

THE CONTRACTOR SHALL INSERT THE DATE OF CLOSURE, DURATION (NUMBER OF DAYS FROM THE CLOSURE TO THE PROJECT COMPLETION DATE OR SCHEDULED DATE OF OPENING) AND INFORMATION PHONE NUMBER ON THE SIGN IN THE PROPER POSITIONS.

OC-60A-60
60"x36"

IN ADDITION TO THE NOTICE OF CLOSURE SIGNS FOR THE BRIDGE, THE OC-60 SIGN SHALL BE MODIFIED AS SHOWN BELOW TO ALERT TRAFFIC TO THE CLOSURE OF THE WEST 28TH STREET ENTRANCE RAMP DURING THE AM PEAK PERIOD FOR THE DURATION OF THE BRIDGE CLOSURE.

OC-60A-60 (MOD)
60"x36"

ONE SIGN SHALL BE PLACED FOR EACH DIRECTION OF TRAVEL ON WEST 28TH STREET IMMEDIATELY PAST THE INTERSECTIONS OF WEST 28TH STREET WITH DETROIT AVENUE AND WASHINGTON STREET.

ITEM 614 – TEMPORARY PAVEMENT MARKINGS

ALL TEMPORARY PAVEMENT MARKINGS AND SIGNS REQUIRED FOR A PARTICULAR LANE CLOSURE OR TRAFFIC PATTERN SHALL BE INSTALLED ON A SINGLE WORK DAY, AND THE CORRESPONDING TRAFFIC PATTERN, AS DETAILED ON THE PLANS, SHALL BE IMPLEMENTED IMMEDIATELY.

TYPICAL LOCATIONS INCLUDE:

A. LANE CLOSURES
B. LANE SHIFTS

THE TEMPORARY PAVEMENT MARKINGS ARE ESTIMATED ELSEWHERE IN THE PLANS (SEE SHEET 36A)AND ARE INCLUDED FOR USE AS DIRECTED BY ENGINEER FOR TEMPORARY WORK ZONE PAVEMENT MARKINGS AND SIGNS PER THE REQUIREMENTS OF STANDARD CONSTRUCTION DRAWING MT-99.10.

ITEM 404 – BITUMINOUS CONCRETE FOR MAINTAINING TRAFFIC

IN ORDER TO PROVIDE FOR LOCAL ACCESS, LONGITUDINAL VERTICAL FACES ABUTTING DRIVES SHALL BE TEMPORARILY RAMPED. TRANSVERSE VERTICAL FACES SHALL BE TEMPORARILY RAMPED A MINIMUM OF TEN (10) FEET IN LENGTH, AND TRAFFIC SHALL BE WARNED WITH OW-62 "BUMP" SIGNS IN ADVANCE OF THE RAMPED AREAS.

TEMPORARY RAMPING SHALL BE USED IN AREAS WHERE IT IS NECESSARY FOR VEHICLES TO TRAVEL ON REPAIRED JOINTS AND EXISTING PAVEMENT DURING CONSTRUCTION TO MAINTAIN PHASING.

ALL TEMPORARY RAMPING SHALL BE INSTALLED AT THE DIRECTION OF THE ENGINEER USING ITEM 404 – BITUMINOUS CONCRETE FOR MAINTAINING TRAFFIC.

ITEM 410 – TRAFFIC COMPACTED SURFACES

IN ORDER TO PROVIDE ACCESS TO LOCAL DRIVES AT ALL TIMES, THE DRIVES SHALL BE TEMPORARILY MAINTAINED WITH AN AGGREGATE WEARING COURSE. ALL TRAFFIC COMPACTED SURFACES SHALL BE PLACED AT THE DIRECTION OF THE ENGINEER. THESE AREAS SHALL BE STABILIZED WITH ITEM 616.

ITEM 608 – TEMPORARY BITUMINOUS WALK, AS PER PLAN

THE CONTRACTOR SHALL PLACE AND REMOVE BITUMINOUS WALK, AS NEEDED, IN ORDER TO MAINTAIN PEDESTRIAN TRAFFIC AS DIRECTED BY THE ENGINEER.

ITEM 616 – DUST CONTROL

THE CONTRACTOR SHALL FURNISH AND APPLY WATER AND CALCIUM CHLORIDE FOR DUST CONTROL AND TO STABILIZE ITEM 410 – TRAFFIC COMPACTED SURFACES, AS DIRECTED BY THE ENGINEER. CONTINGENCY QUANTITIES HAVE BEEN INCLUDED FOR DUST CONTROL PURPOSES, SEE ESTIMATED QUANTITIES FOR MAINTAINING TRAFFIC.

ESTIMATED QUANTITIES FOR MAINTAINING TRAFFIC

THE FOLLOWING QUANTITIES ARE ESTIMATED AND ARE INCLUDED FOR USE AS DIRECTED BY THE ENGINEER. THE PROVISIONS OF SECTION 104.02 WILL APPLY TO THESE ITEMS. THE AMOUNT OF THESE ITEMS AND THE LOCATIONS WHERE USED SHALL BE RECORDED, AND PAYMENT WILL BE BASED ON ACTUAL MEASUREMENTS.

ITEM 404 – BITUMINOUS CONCRETE FOR MAINTAINING TRAFFIC	50 CU. YDS.
ITEM 410 – TRAFFIC COMPACTED SURFACE, TYPE A OR B	200 CU. YDS.
ITEM 608 – TEMPORARY BITUMINOUS WALK, AS PER PLAN	1000 SQ. FT.
ITEM 616 – WATER	50 M. GALS.
ITEM 616 – CALCIUM CHLORIDE	5 TONS

ITEM 615 – TEMPORARY ROAD AND PAVEMENT

THIS WORK SHALL INVOLVE UNEARTHING, REPAIRING, WIDENING, GRADING, AND RESURFACING THE EXISTING ROADWAY TO PROVIDE TEMPORARY ACCESS FOR TRAFFIC ON WEST 25TH STREET, NORTH OF DETROIT AVENUE. THE CONTRACTOR SHALL BE RESTRICTED TO THE USE OF FLEXIBLE PAVEMENT FOR TEMPORARY PAVEMENT. THE TEMPORARY ROAD AND PAVEMENT SHALL BE PLACED DURING PHASE I, AT THE LOCATIONS LISTED BELOW, AS SHOWN ON SHEET 43A. THE FOLLOWING QUANTITIES HAVE BEEN CARRIED TO THE GENERAL SUMMARY.

* ALONG WEST EDGE OF W. 25TH STREET AT THE SUBWAY RAMP.....27 S.Y.
* UNDER THE CHANNELIZING ISLAND SEPARATING WEST 25TH STREET AND THE SUBWAY RAMP.....79 S.Y.
* UNDER THE NORTH END OF THE CHANNELIZING ISLAND SEPARATING NORTHBOUND AND SOUTHBOUND TRAFFIC ON WEST 25TH STREET JUST NORTH OF DETROIT AVENUE.....12 S.Y.

ITEM 615 – TEMPORARY PAVEMENT, CLASS B, AS PER PLAN	118 S.Y.
ITEM 615 – TEMPORARY ROAD	LUMP SUM

ITEM – 622 PORTABLE CONCRETE BARRIER

PORTABLE CONCRETE BARRIER (PCB) – 32", SHALL BE PLACED ALONG THE AREAS WHERE TUNNEL WORK IS TAKING PLACE AS SHOWN ON SHEETS 37-42.

IT IS ANTICIPATED THAT THE SAME BARRIER WILL BE USED IN VARIOUS PHASES OF CONSTRUCTION. MOVEMENT OF THE CONCRETE BARRIER BETWEEN PHASES SHALL BE ACCOMPLISHED IN ONE WORKING DAY. FLAGGERS SHALL BE UTILIZED FOR PROTECTION OF VEHICULAR TRAFFIC UNTIL MOVEMENT OF THE BARRIER IS COMPLETE.

ALL COSTS INVOLVED IN MOVING AND REINSTALLING THE CONCRETE BARRIER WILL BE INCLUDED IN THE CONTRACT PRICE FOR ITEM 622 – PORTABLE CONCRETE BARRIER.

PORTABLE CONCRETE BARRIER SHALL BE DELINEATED WITH REFLECTORS, OBJECT MARKERS, AND REFLECTIVE SHEETING.

A. 32" PORTABLE CONCRETE BARRIER WITHOUT GLARE SCREEN

1. REFLECTORS SHALL BE MOUNTED ON THE FACE OF THE PCB WITH THE TOP OF THE REFLECTOR APPROXIMATELY 26" ABOVE THE BASE AND AT A MAXIMUM SPACING OF 25'. THE REFLECTOR SHALL BE: CUBE CORNER PRISM, REFLEXITE SHEETING, OR 3-M DIAMOND GRADE SHEETING. THE REFLECTOR SHALL HAVE A MINIMUM OF 7.5 SQUARE INCHES WITH NO DIMENSION LESS THAN 2". THEY SHALL BE YELLOW IF ON THE LEFT SIDE OF TRAFFIC, AND WHITE ON THE RIGHT. WHEN ADJACENT TO A REVERSIBLE TRAFFIC DIRECTION LANE, YELLOW AND WHITE SHALL BE PAIRED BACK-TO-BACK. PAYMENT SHALL BE AS PER ITEM 614 – BARRIER REFLECTOR, TYPE B.

2. TOP MOUNTED OBJECT MARKERS (9" X15") WITH ORANGE REFLECTIVE SHEETING, TYPE G (730.19) SHALL BE MOUNTED MIDWAY BETWEEN THE FACE MOUNTED REFLECTORS. WHEN ADJACENT TO A REVERSIBLE TRAFFIC DIRECTION LANE OR BETWEEN OPPOSING TRAFFIC FLOWS, THEY SHALL BE MOUNTED IN PAIRS FACING TRAFFIC FROM EACH DIRECTION. PAYMENT SHALL BE AS PER ITEM 614 – OBJECT MARKERS.

B. TAPERED END SECTIONS AND EXPOSED ENDS

1. OBJECT MARKERS (9" X 15") WITH ORANGE REFLECTIVE SHEETING, TYPE G, SHALL BE MOUNTED DIRECTLY ABOVE THE TOP SURFACE AT EACH END OF THE SECTION.

THE FOLLOWING QUANTITIES HAVE BEEN CARRIED TO THE GENERAL SUMMARY:

PORTABLE CONCRETE BARRIER:

PHASE I: STA 13+10 TO STA 19+35 W. 25TH ST.	1200'
PHASE IA: STA 18+90 TO STA 19+40 W. 25TH ST.	110'
PHASE II: STA 92+95 TO STA 100+45 DETROIT AVE.	1025'
PHASE IIA: STA 99+80 TO STA 100+15 DETROIT AVE.	250'
PHASE III: STA 131+20 TO STA 2+60 SUPERIOR AVE.	480'
ITEM 622 – PORTABLE CONCRETE BARRIER, 32"	3065 LIN. FT.

BARRIER REFLECTOR:

3065' BARRIER x 1 BARRIER REFLECTOR/25' OF BARRIER = 123 BARRIER REFLECTORS

ITEM 614 – BARRIER REFLECTOR, TYPE B	123 EACH
ITEM 614 – OBJECT MARKER	123 EACH

ITEM 632 – LOOP DETECTOR REPAIRS

THE FOLLOWING QUANTITIES HAVE BEEN CARRIED TO THE GENERAL SUMMARY AS CONTINGENCY ITEMS USED TO REPAIR LOOP DETECTORS THAT MAY BE DAMAGED DURING THE LIFE OF THE CONTRACT. REPAIRS SHALL BE MADE AS NECESSARY AT THE DIRECTION OF THE ENGINEER AT THE FOLLOWING INTERSECTIONS:

-ONTARIO ST./HURON RD.
-ONTARIO ST./EAGLE AVE./E. 4TH ST.
-E. 4TH ST./CARNEGIE AVE./COMMERCIAL AVE.
-ONTARIO ST./CARNEGIE AVE.

ITEM 632 – LOOP DETECTOR PAVEMENT CUTTING	600 L.F.
ITEM 632 – LOOP DETECTOR WIRE, TYPE E	1200 L.F.

ITEM SPECIAL – REPLACEMENT DRUM

DRUMS FURNISHED BY THE CONTRACTOR IN ACCORDANCE WITH THE REQUIREMENT OF THE PLANS, SPECIFICATIONS, AND PROPOSAL WHICH BECOME DAMAGED BY TRAFFIC FOR REASONS BEYOND THE CONTROL OF THE CONTRACTOR SHALL BE REPLACED IN KIND WHEN ORDERED BY THE ENGINEER. REPLACEMENT DRUMS SHALL BE NEW.

PAYMENT FOR THE NEW DRUMS SHALL BE MADE AT THE UNIT BID PRICE PER EACH FOR "ITEM SPECIAL – REPLACEMENT DRUM," AND SHALL INCLUDE THE COST OF REMOVING AND DISPOSING OF THE DAMAGED DRUM; AND PROVIDING AND MAINTAINING THE REPLACEMENT DRUM IN ACCORDANCE WITH THE CONTRACT REQUIREMENTS FOR THE ORIGINAL DRUM.

THE FOLLOWING ESTIMATED QUANTITY HAS BEEN PROVIDED IN THE GENERAL SUMMARY.

ITEM SPECIAL – REPLACEMENT DRUM	100 EACH

ITEM SPECIAL – REPLACEMENT SIGN

FLAT SHEET SIGNS FURNISHED BY THE CONTRACTOR IN ACCORDANCE WITH THE REQUIREMENT OF THE PLANS, SPECIFICATIONS, AND PROPOSAL WHICH BECAME DAMAGED BY TRAFFIC FOR REASONS BEYOND THE CONTROL OF THE CONTRACTOR SHALL BE REPLACED IN KIND WHEN ORDERED BY THE ENGINEER. REPLACEMENT SIGNS SHALL BE NEW. OTHER MATERIALS MAY BE USED BUT IN GOOD CONDITION SUBJECT TO APPROVAL BY THE ENGINEER. WHEN ADDITIONAL SIGNS ARE FOUND BY THE ENGINEER TO BE NECESSARY FOR THE SAFE MAINTENANCE OF TRAFFIC, ABOVE AND BEYOND THE SIGNING SHOWN ON THE PLANS OR ON THE STANDARD CONSTRUCTION DRAWINGS, THE CONTRACTOR SHALL FURNISH, ERECT, MAINTAIN AND REMOVE THE ADDITIONAL SIGNS UNDER THIS ITEM, AS DIRECTED BY THE ENGINEER.

PAYMENT FOR THE NEW SIGNS WILL BE MADE AT THE BID PRICE PER SQUARE FOOT FOR "ITEM SPECIAL – REPLACEMENT SIGN," AND SHALL INCLUDE THE COST OF REMOVING AND DISPOSING OF THE DAMAGED SIGNS, HARDWARE, AND SUPPORTS; AND PROVIDING THE NECESSARY REPLACEMENT HARDWARE, SUPPORTS, ETC.

AN ESTIMATED QUANTITY OF 100 SQUARE FEET HAS BEEN PROVIDED IN THE GENERAL SUMMARY.

ITEM SPECIAL – REPLACEMENT SIGN	500 S.F.

HOWARD NEEDLES TAMMEN & BERGENDOFF
ARCHITECTS ENGINEERS PLANNERS
HNTB

MADE BY: DAK DATE: APR 94
DRAWN BY: DJF DATE: APR 94
CHECKED BY: JPR DATE: APR 94
SCALE: N/A
DSMOTN02

MAINTENANCE OF TRAFFIC NOTES

FHWA REGION	STATE	PROJECT	
5	OHIO		

33
412

CUYAHOGA COUNTY
CUY-6-14.99

ITEM SPECIAL – LAW ENFORCEMENT OFFICER, AND
ITEM SPECIAL – LAW ENFORCEMENT OFFICER WITH PATROL CAR

IN ADDITION TO THE REQUIREMENTS OF 614 AND THE LATEST EDITION OF THE OHIO MANUAL OF UNIFORM TRAFFIC CONTROL DEVICES (OMUTCD), A UNIFORMED LAW ENFORCEMENT OFFICER, OR A UNIFORMED LAW ENFORCEMENT OFFICER AND OFFICIAL PATROL CAR WITH WORKING TOP MOUNTED EMERGENCY FLASHING LIGHTS, SHALL BE PROVIDED FOR CONTROLLING TRAFFIC FOR THE FOLLOWING TASKS:

1) LANE CLOSURES: DURING INITIAL SET-UP PERIODS, TEAR DOWN PERIODS, SUBSTANTIAL SHIFTS OF A CLOSURE POINT, OR WHERE NEW LANE CLOSURES ARE INITIATED.

2) DURING THE ENTIRE ADVANCE PREPARATION AND CLOSURE SEQUENCE, WHERE COMPLETE BLOCKAGE OF TRAFFIC IS REQUIRED.

3) DURING A TRAFFIC SIGNAL INSTALLATION.

4) RUSH HOUR TRAFFIC CONTROL MONDAY THROUGH FRIDAY ON NON-HOLIDAYS AT THE FOLLOWING INTERSECTIONS ALONG THE DETOUR ROUTE DURING THE TIME PERIODS INDICATED.

	ESTIMATED NUMBER OF OFFICERS
AM HOURS (6 A.M. – 9 A. M.)	
–DETROIT AVENUE/WEST 45TH STREET	1
–LORAIN AVENUE/WEST 25TH STREET	1
–LORAIN AVENUE/GEHRING AVENUE	1
–CARNEGIE AVENUE/ONTARIO STREET	2
–ONTARIO STREET/EAST 4TH STREET/EAGLE AVENUE	2
–ONTARIO STREET/HURON ROAD	2
–WEST 3RD STREET/LAKESIDE AVENUE	1
–ONTARIO STREET/LAKESIDE AVENUE	1
–SUPERIOR AVENUE/WEST 3RD STREET	1
–SUPERIOR AVENUE/WEST 6TH STREET	1
PM HOURS (3 P.M. – 6 P.M.)	
–ONTARIO STREET/LAKESIDE AVENUE	1
–WEST 3RD STREET/LAKESIDE AVENUE	1
–WEST 49TH STREET/DETROIT AVENUE	1
–ONTARIO STREET/HURON ROAD	2
–ONTARIO STREET/EAGLE AVENUE/EAST 4TH STREET	2
–EAST 4TH STREET/CARNEGIE AVENUE	2
–LORAIN AVENUE/GEHRING AVENUE	1
–SUPERIOR AVENUE/WEST 3RD STREET	1
–SUPERIOR AVENUE/WEST 6TH STREET	1
–ONTARIO STREET/CARNEGIE AVENUE	2

THE ENGINEER SHALL HAVE THE OPPORTUNITY TO ADD OR ELIMINATE INTERSECTIONS OR CHANGE THE NUMBER OF OFFICERS FROM THE ABOVE LIST ON ANY GIVEN DAY WITH THE APPROVAL OF THE CITY OF CLEVELAND.

THE LEO'S ARE CONSIDERED TO BE EMPLOYED BY THE CONTRACTOR AND THE CONTRACTOR SHALL BE RESPONSIBLE FOR THEIR ACTIONS. ALTHOUGH THEY ARE EMPLOYED BY THE CONTRACTOR, THE PROJECT ENGINEER SHALL HAVE CONTROL OVER THEIR PLACEMENT. ANY PATROL CAR UTILIZED SHALL BE A PUBLIC SAFETY VEHICLE AS REQUIRED BY THE OHIO REVISED CODE.

THE HOURS PAID SHALL INCLUDE MINIMUM SHOWUP TIME REQUIRED BY THE LAW ENFORCEMENT AGENCY INVOLVED. THE CONTRACTOR SHALL MAKE ARRANGEMENTS FOR THESE SERVICES WITH THE CITY OF CLEVELAND POLICE DEPARTMENT, 1300 ONTARIO STREET, 623-5000.

LAW ENFORCEMENT OFFICERS REQUIRED BY THE TRAFFIC MAINTENANCE TASKS ABOVE SHALL BE PAID FOR ON A UNIT PRICE (HOURLY) BASIS UNDER ITEM SPECIAL – LAW ENFORCEMENT OFFICER AND/OR ITEM SPECIAL – LAW ENFORCEMENT OFFICER WITH PATROL CAR. THE FOLLOWING ESTIMATED QUANTITIES HAVE BEEN CARRIED TO THE GENERAL SUMMARY:

ITEM SPECIAL – LAW ENFORCEMENT OFFICER	30,000 HOURS
ITEM SPECIAL – LAW ENFORCEMENT OFFICER WITH PATROL CAR	2,000 HOURS

LAW ENFORCEMENT OFFICERS (LEO'S) SHOULD NOT BE USED WHERE THE OMUTCD INTENDS THAT FLAGGERS BE USED. HOWEVER, IF THE CONTRACTOR WISHES TO UTILIZE LEO'S FOR FLAGGING AND TRAFFIC CONTROL OTHER THAN FOR THAT REQUIRED IN THESE PLANS, HE MAY DO SO AT HIS OWN EXPENSE. PAYMENT FOR UTILIZING LEO'S IN THIS MANNER WILL BE INCLUDED UNDER ITEM 614 – MAINTAINING TRAFFIC.

WATERPROOFING TUNNEL JOINT

THE WATERPROOFING OF THE TUNNEL JOINT RUNNING ACROSS THE DETROIT AVENUE/ WEST 25TH STREET INTERSECTION AS SHOWN IN PHASE IIA, SHEET 40 SHALL BE COMPLETED ON AN EXPEDITED SCHEDULE USING AN INTERIM COMPLETION DATE AND LIQUIDATED DAMAGES FOR NONCOMPLIANCE AS DESCRIBED IN THE NOTE "LIQUIDATED DAMAGES/INTERIM COMPLETION REQUIREMENTS" ON THIS SHEET. TUNNEL WORK IN THIS AREA SHALL BEGIN IMMEDIATELY AFTER THE PORTABLE CONCRETE BARRRIER HAS BEEN REMOVED FROM THE CENTER OF THE INTERSECTION. THE INTERSECTION SHALL REMAIN OPEN TO TRAFFIC AS SHOWN IN PHASE IIA AND THE WORK SHALL BE COMPLETED IN STAGES WHILE MAINTAINING AT LEAST ONE 12'-LANE IN EACH DIRECTION ON WEST 25TH STREET. FLAGGERS SHALL BE UTILIZED FOR PROTECTION OF VEHICULAR TRAFFIC WHILE TRAFFIC IS BEING SHIFTED. OVERNIGHT ACCESS SHALL BE PROVIDED USING STEEL PLATES PLACED ACROSS THE OPENINGS. PAYMENT FOR THE ABOVE ITEMS SHALL BE INCLUDED UNDER ITEM 614 – MAINTAINING TRAFFIC.

PAVEMENT IMPROVEMENTS FOLLOWING DETOUR

IN ORDER TO RESTORE THE PAVEMENT TO ITS ORIGINAL CONDITION PRIOR TO THE DETOUR, IT MAY BE NECESSARY TO RESURFACE THE ROADS LISTED BELOW AS SHOWN ON THE RESURFACING PLANS. FOR FINAL PAVEMENT MARKINGS, SEE THE PAVEMENT MARKING PLANS. MAINTENANCE OF TRAFFIC SHALL BE AS DETAILED ON SHEET 44 AND STANDARD CONSTRUCTION DRAWINGS MT-95.31 AND MT-95.32.

–LAKESIDE FROM WEST 6TH TO ONTARIO
–WEST 6TH FROM LAKESIDE TO SUPERIOR
–WEST 3RD FROM LAKESIDE TO SUPERIOR
–ONTARIO FROM LAKESIDE TO SUPERIOR
–LORAIN FROM WEST 41ST TO THE VETERANS MEMORIAL BRIDGE EXCLUDING THE BRIDGES OVER BOTH COLUMBUS ROAD AND THE GCRTA
–WEST 49TH FROM DETROIT TO THE WEST SHOREWAY

WEST 28TH STREET ENTRANCE RAMP

THE WEST 28TH STREET ENTRANCE RAMP SHALL BE CLOSED TO ALL TRAFFIC WEEKDAYS FROM 6:00 AM TO 9:00 AM USING GATES AND BARRICADES AS PER STANDARD DRAWING MT-101.60 THROUGHOUT THE DURATION OF THE BRIDGE CLOSURE. THE CONTRACTOR SHALL BE RESPONSIBLE FOR ERECTING THE GATES AND BARRICADES ACROSS THE ENTIRE WIDTH OF THE ENTRANCE RAMP EACH MORNING BY 6:00 AM AND REMOVING THE GATES AND BARRICADES PROMPTLY AT 9:00 AM EACH DAY. THE CONTRACTOR SHALL ALSO BE RESPONSIBLE FOR PLACING THE GATES AND BARRICADES SO THAT ABSOLUTELY NO VEHICLES HAVE ACCESS TO THE ENTRANCE RAMP, BUT TRAFFIC CAN STILL EXIT THE RAMP WITHOUT ANY OBSTRUCTIONS. IN THE EVENT THAT THE CONTRACTOR FAILS TO ERECT THE GATES AND BARRICADES IN A TIMELY FASHION, POLICE FORCES MAY BE CALLED UPON TO DO SO AND THE CONTRACTOR SHALL BE BILLED FOR SUCH SERVICES.

DURING THE HOURS OF THE RAMP CLOSURE, THE GROUND MOUNTED RAMP ENTRANCE SIGN FOR NORTHBOUND TRAFFIC SHALL BE OVERLAYED USING A 4' X 2' BLACK ON ORANGE "CLOSED" OVERLAY ANGLED OVER THE EXISTING SIGN FROM THE BOTTOM LEFT CORNER TO THE TOP RIGHT CORNER AS SHOWN ON THE MODIFICATIONS TO DETOUR PLAN, SHEET 35. THE "CLOSED" OVERLAY SHALL BE ATTACHED SO THAT IT CAN BE REMOVED DAILY DURING THE HOURS THE RAMP IS OPEN WITHOUT DEFACING THE EXISTING SIGN IN ANY WAY.

BRIDGE DRAINAGE WORK

AS PART OF THE DRAINAGE WORK ON THIS PROJECT, NEW DRAINAGE PIPES ARE BEING INSTALLED AND EXISTING PIPES ARE BEING CLEANED. THIS WORK WILL AFFECT TRAFFIC UNDER THE BRIDGE AT THE FOLLOWING LOCATIONS:

–DETROIT AVENUE/WEST 24TH STREET INTERSECTION
–MERWIN STREET (IMMEDIATELY SOUTH OF PIER 6)
–RIVERBED ROAD
–JAMES STREET
–CENTER STREET
–WEST STREET
SEE DRAINAGE PLANS FOR DETAILS OF THIS WORK.

ONE 12' TRAFFIC LANE SHALL BE MAINTAINED FOR ALL DIRECTIONS OF TRAFFIC AT ALL TIMES. WORK AREAS SHALL BE ADEQUATELY MAINTAINED, DELINEATED, AND BARRICADED AT ALL TIMES. ALL LANE SHIFTS AND CLOSURES SHALL BE IN ACCORDANCE WITH THE MANUAL.

LIQUIDATED DAMAGES/INTERIM COMPLETION REQUIREMENTS

THE CONTRACTOR SHALL SCHEDULE HIS OPERATIONS AND INCREASE HIS WORK FORCE AS NECESSARY SO AS TO COMPLETE ALL WORK DESCRIBED BELOW WITHIN THE TIME LIMITS ALLOCATED.

LOCATION	DIRECTION	PHASE	TIME LIMIT
WEST 25TH STREET	NB/SB	IA	20 DAYS
WEST 25TH/DETROIT/ SUBWAY RAMP INTERSECTION	NB/SB/EB	IIA	20 DAYS
SUPERIOR/WEST 9TH/HURON INTERSECTION	NB/SB/EB	III	60 DAYS

THE COMPLETION OF A PHASE REQUIRES THAT THE SUBSEQUENT TRAFFIC CONTROL PHASE BE IMPLEMENTED.

THE TIME LIMIT AS SHOWN SHALL BEGIN ON THE FIRST DAY THAT PERMANENT CLOSURES ARE IMPLEMENTED AND SHALL CONTINUE COUNTING BASED UPON CALENDAR DAYS UNTIL COMPLETION AS DEFINED ABOVE.

THE CONTRACTOR SHALL USE MODERATE-SETTING CONCRETE AS SHOWN IN THE PLAN IN ACCORDANCE WITH ITEM 499, CLASS MS TO MINIMIZE THE CONSTRUCTION TIME. THE MS CONCRETE SHALL ONLY BE USED FOR PAVEMENT CONSTRUCTION AND NOT FOR STRUCTURAL PURPOSES.

LIQUIDATED DAMAGES IN THE AMOUNT OF $1500 SHALL BE ASSESSED FOR EACH DAY (OR PORTION THEREOF) FOR WHICH THESE TIME LIMITS ARE NOT MET IN ACCORDANCE WITH THE ODOT CONSTRUCTION AND MATERIAL SPECIFICATIONS SECTION 108.07.

TRAFFIC MANAGEMENT PLAN

PURPOSE
THIS TRAFFIC MANAGEMENT PLAN DEFINES THE RESPONSIBILITIES AND RELATIONSHIPS OF THE CONTRACTOR, THE OHIO DEPARTMENT OF TRANSPORTATION, AND OTHER AFFECTED JURISDICTIONS IN THE MANAGEMENT OF TRAFFIC DURING THE CONSTRUCTION OF THE PROJECT.

THE TRAFFIC MANAGEMENT PLAN SUPPLEMENTS THE REQUIREMENTS OF THE OHIO MANUAL OF UNIFORM TRAFFIC CONTROL DEVICES.

TRAFFIC PATTERN CHANGES
THE ENGINEER AND THE TRAFFIC OPERATIONS OFFICER SHALL BE RESPONSIBLE FOR COORDINATING ALL TRAFFIC-HANDLING CHANGES. WHEN IT IS DETERMINED THAT POLICE ARE NECESSARY TO AFFECT THESE CHANGES, THE ENGINEER SHALL CONTACT THE POLICE. HE SHALL ALSO ADVISE THE POLICE AS TO ANY LANE CLOSURES.

PRIOR TO CHANGING TRAFFIC PATTERNS, THE CONTRACTOR SHALL HAVE ADEQUATE PERSONNEL, EQUIPMENT, AND MATERIALS TO SET UP ALL TRAFFIC CONTROL DEVICES WITHIN A REASONABLE TIME AS APPROVED BY THE ENGINEER.

WHEN CHANGING TRAFFIC FROM EXISTING OR TEMPORARY ROADWAYS, ALL REQUIRED TEMPORARY SIGNALS, LIGHTING, SIGNING, DELINEATION, AND PAVEMENT MARKING MUST BE IN PLACE AND OPERATING. POLICE SHALL BE PRESENT TO INSURE THE SAFETY AND ADEQUACY OF ALL NEW TRAFFIC PATTERNS.

IN THE EVENT OF EMERGENCIES, THE CONTRACTOR SHALL MAKE ALL OF THE NECESSARY ARRANGEMENTS WITH THE POLICE AND ANY OTHER AFFECTED AGENCIES.

WHEN THE TRAFFIC PATTERN IS CHANGED, ALL EXISTING NON-APPLICABLE TRAFFIC CONTROL DEVICES SHALL BE IMMEDIATELY REMOVED OR COVERED. NO ROADWAYS ARE TO BE CLOSED WITHOUT THE APPROVAL OF THE ENGINEER. THE TRAFFIC CONTROL DEVICES TO BE USED ARE NOTED IN THE TRAFFIC MANAGEMENT PLAN AND THE CONTRACT PLANS. THE ENGINEER SHALL GIVE THE SIGNAL TO SWITCH TRAFFIC AND POLICE SHALL SLOW TRAFFIC IN ADVANCE OF THE WORK AREA AND AT ALL OTHER DESIGNATED LOCATIONS, AND THE CONTRACTOR SHALL PROVIDE THE NECESSARY TRAFFIC CONTROL DEVICES.

HOWARD NEEDLES TAMMEN & BERGENDOFF
ARCHITECTS ENGINEERS PLANNERS
HNTB

MADE BY: DAK DATE: APR 94
DRAWN BY: DJF DATE: APR 94
CHECKED BY: JPR DATE: APR 94
SCALE: N/A
DSMOTN02

MAINTENANCE OF TRAFFIC NOTES

FHWA REGION	STATE	PROJECT	
5	OHIO		

33A
412

CUYAHOGA COUNTY
CUY-6-14.99

EMERGENCY SITUATIONS
EMERGENCY SITUATIONS ARE THOSE SITUATIONS WHICH POSE A POTENTIAL THREAT TO LIFE. THE POLICE SHALL IMPLEMENT EMERGENCY PLANS (DETOURS, TOW TRUCKS, LANE CLOSURES, ETC.) AND COORDINATE THESE ACTIVITIES, IN SO FAR AS POSSIBLE, WITH THE ENGINEER AND THE TRAFFIC OPERATIONS OFFICER. THE POLICE SHALL ALSO BE RESPONSIBLE FOR TEMPORARY ROAD CLOSURES AND MEDIA ALERTS. AFTER THE EMERGENCY HAS STABILIZED, THE CONTRACTOR SHALL RESUME WITH NORMAL TRAFFIC CONTROL OPERATIONS.

TRAFFIC MANAGEMENT QUALIFICATIONS
THE CONTRACTOR'S TRAFFIC OPERATIONS OFFICER SHALL HAVE RECEIVED FORMAL TRAFFIC SAFETY TRAINING AND HAVE HAD AT LEAST ONE YEAR OF EXPERIENCE IN SUPERVISING THE MAINTENANCE AND PROTECTION OF TRAFFIC THROUGH HIGHWAY CONSTRUCTION WORK AREAS.

THE DISTRICT 12 DEPUTY DIRECTOR OF THE OHIO DEPARTMENT OF TRANSPORTATION SHALL HAVE FINAL APPROVAL OF THE CONTRACTOR'S TRAFFIC OPERATIONS OFFICER.

WHENEVER, IN THE OPINION OF THE ENGINEER, THE TRAFFIC OPERATIONS OFFICER IS CARELESS OR INCOMPETENT, OBSTRUCTS THE PROGRESS OF THE WORK, ACTS CONTRARY TO INSTRUCTIONS OR THE PUBLIC'S INTEREST OR CONDUCTS HIMSELF IMPROPERLY, THE CONTRACTOR SHALL, UPON THE REQUEST OF THE ENGINEER, DISCHARGE HIM FROM THE WORK AND SHALL NOT AGAIN EMPLOY HIM ON THE PROJECT EXCEPT WITH THE WRITTEN CONSENT OF THE ENGINEER.

TRAFFIC MANAGEMENT COMMITTEE
THE TRAFFIC MANAGEMENT COMMITTEE SHALL CONSIST OF THE PROJECT ENGINEER (WHO SHALL ALSO SERVE AS COMMITTEE CHAIRMAN), THE CONTRACTOR'S TRAFFIC OPERATIONS OFFICER, AND REPRESENTATIVES FROM CUYAHOGA COUNTY ENGINEER, CITY OF CLEVELAND (COMMISSIONER OF TRAFFIC ENGINEERING AND POLICE TRAFFIC COMMISSIONER) AND ODOT. THE CHAIRMAN MAY INVITE OTHER PARTIES TO ANY OR ALL COMMITTEE MEETINGS IF THEIR PRESENCE IS NECESSARY TO IMPLEMENT THE PROVISIONS OF THE TRAFFIC MANAGEMENT PLAN.

THE CHAIRMAN SHALL SCHEDULE MEETINGS AT TIMES AS MAY BE DEEMED NECESSARY, AT A CONVENIENT LOCATION, FOR THE PURPOSE OF: GATHERING INFORMATION FOR THE PREPARATION OF PERIODIC PROGRESS REPORTS, DISCUSSING THE STATUS OF THE PROJECT, REVIEWING MAINTENANCE OF TRAFFIC CHANGE ORDERS, INVESTIGATING ANY PROBLEM LOCATIONS, SUBMITTING RECOMMENDATIONS TO IMPROVE THE CONTRACTOR'S MAINTENANCE AND PROTECTION OF TRAFFIC OPERATIONS, AND TO COORDINATE THE DEVELOPMENT AND RELEASE OF ANNOUNCEMENTS TO BE DISTRIBUTED TO THE PUBLIC AND THE NEWS MEDIA.

TRAFFIC SAFETY RESPONSIBILITIES OF THE ENGINEER

THE ENGINEER OR HIS DESIGNEE SHALL:

1. BE TOTALLY FAMILIAR WITH THE TRAFFIC MANAGEMENT PLAN, THE OHIO MANUAL OF UNIFORM TRAFFIC CONTROL DEVICES, THE CONTRACT PLANS AND THE SPECIFICATIONS.

2. MONITOR THE CONTRACTOR'S MAINTENANCE OF ALL RELATED ACTIVITIES AND REQUIREMENTS (UTILITIES, ETC.).

3. IN THE EVENT OF DAMAGE TO DEVICES IN-PLACE AND THE CONTRACTOR'S TRAFFIC OPERATIONS OFFICER IS UNABLE OR OTHERWISE FAILS TO PERFORM THE SPECIFIED DUTIES, THE ENGINEER WILL CALL THE CONTRACTOR'S SUPERINTENDENT OR ASSISTANT SUPERINTENDENT WHO SHALL MAKE HIMSELF AVAILABLE AT THE SITE WITHIN A REASONABLE LENGTH OF TIME AND WITH SUCH ADDITIONAL WORKMEN AS MAY BE REQUIRED TO MAKE THE NECESSARY REPAIRS.

4. SERVE AS CHAIRMAN OF THE TRAFFIC MANAGEMENT COMMITTEE DURING CONSTRUCTION AND INITIATE REVIEWS OF MAJOR MAINTENANCE OF TRAFFIC PROBLEMS AND PROPOSED CHANGES IN MAJOR MAINTENANCE OF TRAFFIC REQUIREMENTS.

5. BE AVAILABLE ON AN EMERGENCY BASIS TO HANDLE IMMEDIATE SEVERE PROBLEMS AND ADDRESS PROBLEMS OCCURRING OUTSIDE THE NEARBY PROJECT AREA.

CONTRACTOR'S TRAFFIC OPERATIONS OFFICER
THE TRAFFIC OPERATIONS OFFICER SHALL BE AN EMPLOYEE OF THE CONTRACTOR AND NOT ONE OF THE SUBCONTRACTORS OR OTHER AGENCIES. THE TRAFFIC OPERATIONS OFFICER SHALL HAVE ADEQUATE ASSISTANCE TO MONITOR AND MAINTAIN TRAFFIC CONTROL DEVICES SEVEN (7) DAYS A WEEK AND TWENTY-FOUR (24) HOURS A DAY. THE TRAFFIC OPERATIONS OFFICER SHALL BE THOROUGHLY FAMILIAR WITH THE CONTRACT PROVISIONS FOR MAINTENANCE AND PROTECTION OF TRAFFIC.

THE CONTRACTOR SHALL PROVIDE THE TRAFFIC OPERATIONS OFFICER AND HIS ASSISTANTS WITH A SUITABLE VEHICLE(S) EQUIPPED WITH AMBER FLASHING LIGHTS, TWO-WAY RADIO AND A PAGER FOR PATROLLING THE DETOUR ROADWAY(S) AS APPLICABLE. THE TWO-WAY RADIO SHALL BE SUITABLE FOR CONTACTING THE CONTRACTOR'S AND ENGINEER'S FIELD OFFICE BASE STATIONS.

THE CONTRACTOR SHALL MAKE AVAILABLE TO THE ENGINEER THE TRAFFIC OPERATIONS OFFICER'S TELEPHONE NUMBER WHERE HE MAY BE CONTACTED ON A 24-HOUR PER DAY, 7 DAYS A WEEK BASIS.

DUTIES OF TRAFFIC OPERATIONS OFFICER AND HIS ASSISTANTS:

1. BE TOTALLY FAMILIAR WITH THE TRAFFIC MANAGEMENT PLAN, THE OHIO MANUAL OF UNIFORM TRAFFIC CONTROL DEVICES, THE CONTRACT PLANS, AND THE SPECIFICATIONS.

2. DEVISE A PROCEDURE TO FAMILIARIZE EACH INDIVIDUAL COMING TO WORK ON THE PROJECT FOR THE FIRST TIME OF THE NEED FOR PROPER CONSIDERATION OF TRAFFIC CONTROL PROCEDURES FOR THE PROTECTION OF THE TRAVELING PUBLIC AND FOR THEIR OWN PROTECTION.

3. ASSURE COMPLIANCE OF THE CONTRACTOR'S MAINTENANCE AND PROTECTION OF TRAFFIC ACTIVITIES AS REQUIRED BY THE CONTRACT PROVISIONS.

4. ON A DAILY BASIS INSPECT THE CONDITION AND POSITION OF TRAFFIC CONTROL DEVICES IN USE ON THE DETOUR ROUTES AND ASSURE THAT THEY ARE IN PROPER WORKING ORDER, CLEAN, VISIBLE AND CONFORM TO THE CONTRACT PLANS AND SPECIFICATIONS. INSPECTION PERIODS SHALL INCLUDE SATURDAYS, SUNDAYS, AND HOLIDAYS AS WELL AS WEEKDAYS. NIGHT INSPECTIONS SHALL ALSO BE MADE AT LEAST ONCE PER WEEK . PATROLS SHALL BE MADE AT LEAST ONCE PER DAY OR MORE FREQUENTLY, AS ORDERED BY THE ENGINEER.

5. SERVE AS MEMBER OF THE TRAFFIC MANAGEMENT COMMITTEE.

6. REVIEW AND ANTICIPATE THE APPROPRIATE TRAFFIC CONTROL NEEDS FOR ALL CONSTRUCTION PHASES, ADVISE THE PROJECT ENGINEER OF ALL PROPOSED CHANGES AS SOON AS POSSIBLE AND ASSURE THAT ANY AND ALL TRAFFIC CONTROL DEVICES DETERMINED TO BE NECESSARY FOR THE SAFE AND EFFICIENT MOVEMENT OF TRAFFIC DUE TO THE PROPOSED CHANGES ARE OBTAINED AND INSTALLED.

7. COORDINATE THE MAINTENANCE OF TRAFFIC OPERATIONS WITH THE ENGINEER AND TRAFFIC MANAGEMENT COMMITTEE.

8. CONTINUOUSLY REVIEW EQUIPMENT OPERATION AND STORAGE AND THE HANDLING AND STORAGE OF MATERIALS AS THEY RELATE TO TRAFFIC SAFETY AND OPERATION.

9. MAINTAIN A TWENTY-FOUR (24) HOUR TELEPHONE ANSWERING SERVICE FOR USE IN RECEIVING REPORTS OF TRAFFIC CONTROL DEFICIENCIES AND EMERGENCIES. RESPONSE TO DEFICIENCIES IN THE TRAFFIC CONTROL DEVICES ALONG THE DETOUR ROUTES SHALL OCCUR WITHIN TWO HOURS OF NOTIFICATION BY ANY MEMBER OF THE TRAFFIC MANAGEMENT COMMITTEE. IF DEFICIENCIES ARE NOT UNDER REPAIR WITHIN THE ALLOTTED TIME, THE ENGINEER WILL NOTIFY THE CONTRACTOR IN WRITING OF INTENT TO ASSESS A PENALTY IF THE DEFICIENCY IS NOT CORRECTED WITHIN TWO HOURS. SHOULD THE DEFICIENCY REMAIN UNCORRECTED AFTER A TOTAL OF FOUR HOURS, A PENALTY OF $1,500.00 PER WRITTEN NOTIFICATION SHALL BE WITHHELD FROM PAYMENTS, AS SPECIFIED UNDER ITEM 109, DUE THE CONTRACTOR.

10. REPORT TO THE ENGINEER AND TO THE CONTRACTOR ANY CONDITION OF DEFECTIVE OR DAMAGED PAVEMENT, SIGNS, SIGNALS, BARRIERS, IMPACT ATTENUATORS, LIGHTS, ETC., AND OTHER RELATED DEFICIENCY FOR IMMEDIATE REPAIR OR REPLACEMENT BY THE CONTRACTOR.

11. IN THE EVENT OF DAMAGE TO THE IN-PLACE TRAFFIC PROTECTION AND CONTROL DEVICES BEYOND THE REPAIR CAPABILITY OF THE TRAFFIC OPERATIONS OFFICER, HE SHALL IMMEDIATELY CALL THE CONTRACTOR'S SUPERINTENDENT OR HIS ASSISTANT WHO SHALL MAKE HIMSELF AVAILABLE AT THE SITE WITHIN A REASONABLE LENGTH OF TIME AND WITH SUCH ADDITIONAL WORKMEN AS MAY BE REQUIRED TO MAKE THE NECESSARY REPAIRS.

12. COORDINATE PAY QUANTITIES FOR THE VARIOUS MAINTENANCE OF TRAFFIC ITEMS.

13. INSPECT PAVEMENT MARKINGS, BOTH TEMPORARY AND EXISTING, TO DETERMINE IF THEY ARE IN AN ACCEPTABLE CONDITION.

PAYMENT FOR THE CONTRACTOR'S TRAFFIC OPERATIONS OFFICER AND HIS ASSISTANTS SHALL BE INCLUDED UNDER ITEM 614 - MAINTAINING TRAFFIC.

DUTIES OF THE POLICE
THE TRAFFIC COMMISSIONER OF THE CLEVELAND POLICE DEPARTMENT OR HIS DESIGNEE SHALL:

1. SERVE AS A MEMBER OF THE TRAFFIC MANAGEMENT COMMITTEE.

2. DESIGNATE A CONTACT PERSON FOR THE PROJECT.

3. MAKE RECOMMENDATIONS TO THE ENGINEER RELATIVE TO THE MAINTENANCE OF TRAFFIC.

4. PROVIDE OFFICERS AND POLICE CARS AS REQUIRED BY THE CONTRACT PLANS, FOR EMERGENCIES, ASSISTING IN THE SWITCHING OF TRAFFIC HANDLING SCHEMES WHEN NECESSARY AND FOR MANUAL CONTROL OF KEY INTERSECTIONS AS DIRECTED BY THE PROJECT ENGINEER.

5. PROVIDE THE ENGINEER WITH ONE (1) COPY OF AN ACCIDENT REPORT FOR ALL TRAFFIC ACCIDENTS WHICH OCCURRED WITHIN OR IMMEDIATELY ADJACENT TO THE CONSTRUCTION WORK LIMITS OR ON THE DETOUR ROADWAY.

6. PERFORM INFORMAL PERIODIC REVIEWS OF THE CONTRACTOR'S MAINTENANCE OF TRAFFIC OPERATIONS.

HOWARD NEEDLES TAMMEN & BERGENDOFF
ARCHITECTS ENGINEERS PLANNERS HNTB

MADE BY: DAK DATE: APR 94
DRAWN BY: DJF DATE: APR 94
CHECKED BY: JPR DATE: APR 94
SCALE: N/A
DSMOTN02

MAINTENANCE OF TRAFFIC NOTES

Winter Limitations

The following restrictions shall apply to all of the maintenance of traffic operations associated with the tunnel work, specifically the maintenance of traffic phasing as detailed on sheet nos. 33 and 37 to 43 of 412.

All existing lanes shall be open to traffic between November 15 and April 15. November 15 shall be considered to constitute an interim completion date and liquidated damages shall be assessed in accordance with 108.07 for each calendar day that all lanes are not open and available to traffic.

The above restrictions are not intended to preclude the Contractor from performing work on the tunnels that can be accomplished without the closing to traffic of any portion of the existing roadway (i.e., work that can be accomplished entirely from within the tunnels).

Trench for Tunnel Joint Repairs

Trench excavation for tunnel joint repairs shall be performed as shown in the maintenance of traffic plans and as specified in the sequence of construction on sheet no. 34 of 412. The open trench shall be adequately maintained, delineated and protected at all times. In addition to the traffic control devices shown on sheet nos. 37 to 43 of 412, the contractor shall utilize temporary construction fence, chain link fence, plywood walls and/ or portable concrete barrier to protect pedestrians from the potential hazards created by the tunnel joint repair operations.

Temporary construction fence shall be bright orange, plastic or nylon, nominally forty-two inches (42") in height and securely fastened to posts spaced not more than six feet (6') center to center.

Chain link fence shall be Type CLT and shall conform to the requirements for Item 607, except that the Contractor may install used materials, in good condition, in lieu of new materials. Certification and testing will not be required.

Plywood walls shall be a minimum of five eighths inch (5/8") exterior plywood, supported by 2x4 posts, or heavier, securely anchored and buttressed to resist any potential loadings, including wind loadings and human contact loadings.

All costs associated with the protection of pedestrians shall be included in the lump sum price bid for Item 614 - Maintaining Traffic.

Contractor's Performance - Law Enforcement Officers

Law Enforcement Officers (LEOs), employed by the Contractor for the purpose of controlling traffic during rush hours, shall be in position at the locations and times indicated on sheet no. 33 of 412, or as modified by the Project Engineer. In the event that one or more of the Law Enforcement Officers, employed by the Contractor, fails to report for duty on time, the Contractor shall have thirty (30) minutes to have replacement Law Enforcement Officers in position. If, the Contractor fails to have replacement Law Enforcement Officers in position within the allotted time, the Cleveland Police Department may take the necessary steps to place on-duty Law Enforcement Officers in position, and the cost of such services will be deducted from the money which may be due or become due to the Contractor.

PLOT SUBMITTED: 01-JUL-1994 15:31
09870gna.dgn
PLOTTED BY: J.D.B.
PLOTTED FROM: /i/pd/chebebre/test/MS_DEF.dgn

CALCULATED
CHECKED

MAINTENANCE OF TRAFFIC NOTES

CUYAHOGA COUNTY
CUY-6-14.99

CONSTRUCTION SEQUENCE

FHWA REGION	STATE	PROJECT	
5	OHIO		

34
412

CUYAHOGA COUNTY
CUY-6-14.99

THE FOLLOWING CONSTRUCTION SEQUENCE SHALL BE USED IN CONJUNCTION WITH THE MAINTENANCE OF TRAFFIC PLANS SO ACCESS CAN BE MAINTAINED TO ABUTTING PROPERTIES DURING THE REHABILITATION OF THE VETERANS MEMORIAL BRIDGE AND THE ADJOINING TUNNELS.

I. WORK TO BE PERFORMED JUST PRIOR TO CLOSURE OF THE VETERANS MEMORIAL BRIDGE AND ACTIVATION OF THE DETOUR.
- A. DETROIT/W. 45TH INTERSECTION
  1. PROGRAM THE CONTROLLER TO OPERATE THE PHASING AND TIMING SHOWN ON THE "DETROIT/W.45TH TEMPORARY SIGNAL PLAN", SEE DETOUR PLANS, SHEET 82.
- B. ONTARIO STREET/CARNEGIE AVENUE SIGNALS
  1. THE INDIVIDUAL SIGNAL PHASING AND TIMING AND THE SYSTEM TIMING FOR THE SIGNALS AT: ONTARIO/HURON, ONTARIO/EAGLE/E. 4TH, ONTARIO/CARNEGIE AND CARNEGIE/E. 4TH/COMMERCIAL WAS PROGRAMMED BY THE CITY. THIS TIMING INFORMATION CAN BE FOUND IN THE DETOUR PLANS, SHEETS 83–87. CONTACT THE CITY OF CLEVELAND DIVISION OF TRAFFIC ENGINEERING TO COORDINATE THE IMPLEMENTATION OF THE NEW SIGNAL TIMING.
- C. DETOUR SIGNING
  1. UNCOVER ALL DETOUR SIGNS AND OVERLAYS INSTALLED BY THE VETERANS MEMORIAL BRIDGE DETOUR CONTRACTOR.
  2. ERECT THE OVERLAYS FOR THE EASTBOUND SHOREWAY SIGNS AND COVER THE ROUTE MARKERS AS SHOWN ON THE "MODIFICATIONS TO DETOUR PLAN", SHEET 35, IN THE MAINTENANCE OF TRAFFIC PLANS.
  3. REMOVE THE NO LEFT TURN SIGNS, R–121, FOR NORTHBOUND W. 25TH STREET AND EASTBOUND DETROIT AVENUE AT THAT INTERSECTION AS SHOWN ON THE "MODIFICATIONS TO DETOUR PLAN", SHEET 35.
  4. CLOSE THE W. 28TH STREET ENTRANCE RAMP TO THE SHOREWAY DURING THE WEEKDAY A.M. PEAK HOURS, 6–9 A.M., AS DESCRIBED IN THE MAINTENANCE OF TRAFFIC NOTES AND SHOWN ON THE "MODIFICATIONS TO DETOUR PLAN", SHEET 35.
- D. CLOSURE OF THE VETERANS MEMORIAL BRIDGE AND ACTIVATION OF THE DETOUR ROUTES SHALL BE PERFORMED ON A WEEKEND, 7 P.M. FRIDAY TO 6 A.M. MONDAY.

II. WORK TO BE PERFORMED DURING THE CLOSURE OF THE VETERANS MEMORIAL BRIDGE
- A. MAINTENANCE OF TRAFFIC DURING TUNNEL REPAIRS
  1. GENERAL
     A THREE PHASE CONSTRUCTION SEQUENCE IS PROPOSED FOR THE TUNNEL WORK BEING DONE IN CONJUNCTION WITH THE REPAIRS TO THE VETERANS MEMORIAL BRIDGE. TUNNEL REPAIRS SHALL NOT BEGIN UNTIL THE BRIDGE IS COMPLETELY CLOSED AND ALL DETOUR ROUTES HAVE BEEN ESTABLISHED. PHASE I SHALL PROVIDE FOR ALL CONSTRUCTION BEING PERFORMED ON THE TUNNEL RUNNING BELOW WEST 25TH STREET. PHASE II SHALL COVER ALL WORK BEING DONE TO THE TUNNEL RUNNING BELOW DETROIT AVENUE. PHASE III WILL BE PUT IN PLACE WHILE WORK IS BEING PERFORMED BELOW THE SUPERIOR/HURON/WEST 9TH STREET INTERSECTION.
  2. PHASE I
     - a. WORK REQUIRED
       - i. PERFORM ALL WORK NECESSARY ON THE TUNNEL BELOW WEST 25TH STREET BY CLOSING THE CENTER PORTION OF THE ROADWAY AND CHANNELIZING TRAFFIC ON EITHER SIDE USING PORTABLE CONCRETE BARRIER. THE JOINT REPAIR AT STA. 19+03 SHALL ONLY BE COMPLETED HALFWAY DURING THE FIRST PART OF PHASE I AND COMPLETED DURING PHASE IA SO AS TO NOT IMPEDE THE FLOW OF TRAFFIC.
       - ii. REFER TO SHEET 37 FOR MAINTENANCE OF TRAFFIC DETAILS DURING PHASE I.
       - iii. REFER TO ROADWAY PLANS FOR JOINT LOCATION AND PAVEMENT REPLACEMENT
       - iv. CONSTRUCT PAVEMENT REPLACEMENT AS SHOWN ON SHEET 43A.
     - b. REQUIREMENTS
       - i. PORTABLE CONCRETE BARRIER SHALL BE USED BETWEEN THE TUNNEL WORK AND TRAFFIC IN BOTH DIRECTIONS.
       - ii. TWO–WAY TRAFFIC SHALL BE MAINTAINED AT ALL TIMES ON WEST 25TH STREET BY ALLOWING 2–10' LANES NORTHBOUND AND ONE 12' LANE SOUTHBOUND AROUND THE TUNNEL CONSTRUCTION IN THE CENTER OF THE ROAD.
       - iii. TRAFFIC SIGNALS SHALL BE SHIFTED AT WEST 25TH STREET AND DETROIT AVENUE AS SHOWN ON SHEET 39. SIGNAL TIMING AND PHASING SHALL ALSO BE MODIFIED AS SHOWN.
       - iv. STOP SIGN CONTROL AT SUBWAY RAMP AND WEST 25TH STREET SOUTHBOUND AS SHOWN ON SHEET 43A.
     - c. SPECIAL CONDITIONS
       - i. PHASE IA
         IN ORDER TO MAINTAIN TRAFFIC THROUGH THE INTERSECTION AT ALL TIMES, THE REMAINING HALF OF THE JOINT REPAIR AT STA. 19+03 SHALL BE COMPLETED SEPARATELY IN STAGE IA. THE TUNNEL REPAIRS SHALL BE COMPLETED IN NO MORE THAN 20 CALENDAR DAYS AND PAVEMENT RESTORATION SHALL BE COMPLETED USING 499 CONCRETE CLASS MODERATE SETTING. AT THIS TIME ONE 12' LANE SHALL BE MAINTAINED IN EACH DIRECTION ALONG THE SOUTH LEG OF WEST 25TH STREET AS SHOWN ON SHEET 38. SIGNAL HEADS, TIMING, AND PHASING SHALL BE MODIFIED AS SHOWN ON SHEET 39. SIGNING AND PAVEMENT MARKINGS SHALL BE ADJUSTED ACCORDINGLY. SEE NOTE "LIQUIDATED DAMAGES/INTERIM COMPLETION REQUIREMENTS" IN THE MAINTENANCE OF TRAFFIC NOTES.
       - ii. CONSTRUCT PAVEMENT REPLACEMENT ON WEST 25TH STREET IN STAGES 1 AND 2 AS SHOWN ON SHEET 43B. THE USE OF 499 CONCRETE CLASS MODERATE SETTING IS PERMITTED AS NECESSARY TO COMPLETE THE WORK WITHIN THE 20 DAY INTERIM COMPLETION REQUIREMENT.
  3. PHASE II
     - a. WORK REQUIRED
       - i. PERFORM ALL NECESSARY WORK ON THE TUNNEL JOINTS BELOW DETROIT AVENUE STARTING FROM THE WEST END AND WORKING EAST. <u>THE JOINT IN THE CENTER OF THE DETROIT AVENUE/WEST 25TH STREET INTERSECTION SHALL BE WORKED ON IN PHASE IIA WHICH IS TO BE COMPLETED BEFORE PHASE II AS DESCRIBED BELOW UNDER SPECIAL CONDITIONS.</u>
       - ii. REFER TO ROADWAY PLANS FOR JOINT LOCATION AND PAVEMENT REPLACEMENT
       - iii. REFER TO SHEETS 40–41 FOR MAINTENANCE OF TRAFFIC DETAILS DURING PHASE II.
       - iv. CONSTRUCT PAVEMENT REPLACEMENT ON THE SUBWAY RAMP IN STAGES 1 AND 2 AS SHOWN ON SHEET 43D.
       - v. AFTER ALL PAVEMENT REPLACEMENT HAS BEEN COMPLETED, STAGE 3 WILL CONSTRUCT THE ISLAND BETWEEN WEST 25TH AND THE SUBWAY RAMP AND THE ISLAND SEPARATING NORTHBOUND AND SOUTHBOUND TRAFFIC AT WEST 25TH STREET NORTH OF DETROIT. USE BARRELS AROUND WORK AREAS AND MAINTAIN AT LEAST ONE 12' LANE IN EACH DIRECTION AS APPROVED BY THE ENGINEER. PAVEMENT MARKINGS SHALL BE TEMPORARILY PLACED AS DETAILED ON THE TRAFFIC CONTROL PLANS USING ITEM 614 FOR THIS STAGE. FINAL PAVEMENT MARKINGS SHALL BE PLACED ACCORDING TO THE TRAFFIC CONTROL PLANS AFTER RESURFACING HAS BEEN COMPLETED. STOP SIGN CONTROL SHALL BE MAINTAINED ON WEST 25TH STREET, THE SUBWAY RAMP, AND THE DETROIT/WEST 25TH INTERSECTION.
     - b. REQUIREMENTS
       - i. ONE 12' LANE SHALL BE MAINTAINED ON DETROIT AVENUE FOR WESTBOUND TRAFFIC DURING THE CONSTRUCTION.
       - ii. PORTABLE CONCRETE BARRIER SHALL BE USED TO SECTION OFF THE WORK AREAS WITH OPENINGS IN THE BARRIER ALONG DETROIT AVENUE AT INTERSECTING STREETS AND MAJOR DRIVES AS SHOWN ON SHEET 41.
       - iii. THE TRAFFIC SIGNALS SHALL BE COVERED AT DETROIT AVENUE AND WEST 28TH STREET AND A TEMPORARY STOP SIGN SHALL BE INSTALLED AS SHOWN ON SHEET 41. TEMPORARY STOP SIGN CONTROL SHALL ALSO BE USED AT THE SUBWAY RAMP AND WEST 25TH STREET AS SHOWN ON SHEET 43D.
       - iv. EASTBOUND TRAFFIC ALREADY BEING DETOURED DUE TO THE CLOSURE OF THE VETERANS MEMORIAL BRIDGE SHALL BE SENT SOUTH AT WEST 29TH STREET, EAST ALONG CHURCH AVENUE, AND THEN SOUTH AT WEST 25TH STREET TO REJOIN THE LOCAL DETOUR.
     - c. SPECIAL CONDITIONS – PHASE IIA
       - i. THE TUNNEL JOINT IN THE CENTER OF THE INTERSECTION OF WEST 25TH STREET AND DETROIT AVENUE SHALL BE CONSTRUCTED SEPARATELY. THE REPAIRS SHALL BE EXPEDITED AND TAKE NO MORE THAN 20 CALENDAR DAYS TO COMPLETE. PAVEMENT RESTORATION SHALL REQUIRE THE USE OF 499 CONCRETE CLASS MODERATE–SETTING TO MINIMIZE THE TIME FOR PHASE IIA. TRAFFIC SHALL BE SETUP FOR PHASE II, EXCEPT THAT WEST 25TH STREET SHALL OPERATE AS ONE 12' LANE NORTHBOUND, SEE SHEET 40. THE WEST END OF PHASE II CAN BE COMPLETED SIMULTANEOUSLY WITH PHASE IIA AS LONG AS PHASE IIA IS COMPLETED WITHIN ITS EXPEDITED SCHEDULE. SEE NOTE ON "LIQUIDATED DAMAGES/INTERIM COMPLETION REQUIREMENTS."
       - ii. CONSTRUCT PAVEMENT REPLACEMENT IN THE CENTER OF WEST 25TH STREET AS SHOWN ON SHEET 43C. USE 499 CONCRETE CLASS MODERATE SETTING TO COMPLETE PHASE IIA WITHIN THE 20 DAY INTERIM COMPLETION SCHEDULE.
       - iii. UPON COMPLETION OF THE TUNNEL JOINT IN THE CENTER OF THE WEST 25TH/DETROIT INTERSECTION AND THE REMOVAL OF THE PORTABLE CONCRETE BARRIER FROM AROUND THE JOINT, WATERPROOFING WORK SHALL BEGIN ON THE LONGITUDINAL JOINT SHOWN IN PHASE IIA. TRAFFIC SHALL BE MAINTAINED AS SHOWN IN PHASE IIA AND THE JOINT SHALL BE WATERPROOFED IN SECTIONS AS DESCRIBED IN THE NOTE "WATERPROOFING TUNNEL JOINTS" ON SHEET 33. ALSO SEE NOTE ON "LIQUIDATED DAMAGES/INTERIM COMPLETION REQUIREMENTS ON SHEET 33.
       - iv. PAVEMENT RESURFACING ON THE WEST END OF THE BRIDGE SHALL BEGIN IMMEDIATELY AFTER ALL JOINT WORK AND PAVEMENT REPLACEMENT HAS BEEN COMPLETED AND DETROIT AVENUE, WEST 25TH STREET, AND THE INTERSECTION ARE FULLY OPERATIONAL. USE STANDARD CONSTRUCTION DRAWINGS MT–95.31 & MT–95.32 AND THE PLAN INSERT SHEET FOR THE USE OF FLAGGERS, SHEET 44, TO MAINTAIN ONE LANE OF TRAFFIC IN EACH DIRECTION DURING CONSTRUCTION.
  4. PHASE III
     - a. WORK REQUIRED
       - i. PERFORM ALL WORK NECESSARY, INCLUDING PAVEMENT RESTORATION, ON THE TUNNEL BELOW THE SUPERIOR/WEST 9TH/HURON INTERSECTION BY CLOSING DOWN ALL THROUGH TRAFFIC MOVEMENTS AND DETOURING TRAFFIC AROUND THE INTERSECTION. THE FOLLOWING MOVEMENTS WILL BE ALLOWED:
         - NORTHBOUND HURON TO EASTBOUND SUPERIOR;
         - NORTHBOUND HURON LEFT INTO THE PARKING LOT;
         - EXITING PARKING LOT SOUTHBOUND ONTO HURON OR EASTBOUND ON SUPERIOR;
         - WESTBOUND SUPERIOR THROUGH ON SUPERIOR TO THE FLATS;
       - ii. REFER TO ROADWAY PLANS FOR JOINT LOCATION AND PAVEMENT RESTORATION.
       - iii. REFER TO SHEET 42 FOR MAINTENANCE OF TRAFFIC DURING PHASE III.
     - b. REQUIREMENTS
       - i. PORTABLE CONCRETE BARRIER SHALL BE SET UP AROUND THE WORK AREA TO KEEP TRAFFIC FROM MAKING ANY MOVEMENTS ACROSS THE INTERSECTION.
       - ii. DETOUR PLANS SHALL BE SET UP ROUTING TRAFFIC AROUND THE INTERSECTION AS SHOWN ON SHEETS 42–43.
       - iii. THE DETOUR FOR THE VETERANS MEMORIAL BRIDGE WILL BE SHIFTED FOR THIS PHASE ONLY BY SENDING TRAFFIC DOWN PROSPECT AVENUE INSTEAD OF HURON ROAD AS SHOWN ON SHEET 43.
       - iv. TRAFFIC SIGNALS AT SUPERIOR/HURON/W9TH STREET SHALL BE TEMPORARILY COVERED DURING PHASE III, AND A TEMPORARY STOP SIGN INSTALLED FOR WEST 9TH STREET. TEMPORARY STOP SIGNS SHALL ALSO BE INSTALLED AT HURON ROAD AND THE PARKING LOT EXIT.
     - c. SPECIAL CONDITIONS
       - i. THE WORK BEING DONE ON THE TUNNEL IN PHASE III SHOULD TAKE NO MORE THAN 60 CALENDAR DAYS TO COMPLETE AND PAVEMENT RESTORATION SHALL BE COMPLETED USING 499 CONCRETE CLASS MODERATE SETTING IN ORDER TO MAINTAIN THAT SCHEDULE. SEE NOTE ON "LIQUIDATED DAMAGES/INTERIM COMPLETION REQUIREMENTS" IN THE MAINTENANCE OF TRAFFIC NOTES.
       - ii. WORK ON PHASE III MAY BE COMPLETED CONCURRENTLY WITH PHASE I OR II AS NECESSARY.
- B. BRIDGE DRAINAGE WORK. SEE RELATED NOTE IN THE MAINTENANCE OF TRAFFIC NOTES.
- C. PAVEMENT IMPROVEMENTS FOLLOWING DETOUR. SEE RELATED NOTE IN THE MAINTENANCE OF TRAFFIC NOTES.

HOWARD NEEDLES TAMMEN & BERGENDOFF
ARCHITECTS ENGINEERS PLANNERS
HNTB

MADE BY: DAK DATE: APR 94
DRAWN BY: DAK DATE: APR 94
CHECKED BY: JPR DATE: APR 94
SCALE: N/A
DSMOTN01

CONSTRUCTION SEQUENCE

MAINTENANCE OF TRAFFIC PLAN

MODIFICATIONS TO DETOUR PLAN

FHWA REGION	STATE	PROJECT	
5	OHIO		

35/412

CUYAHOGA COUNTY
CUY-6-14.99

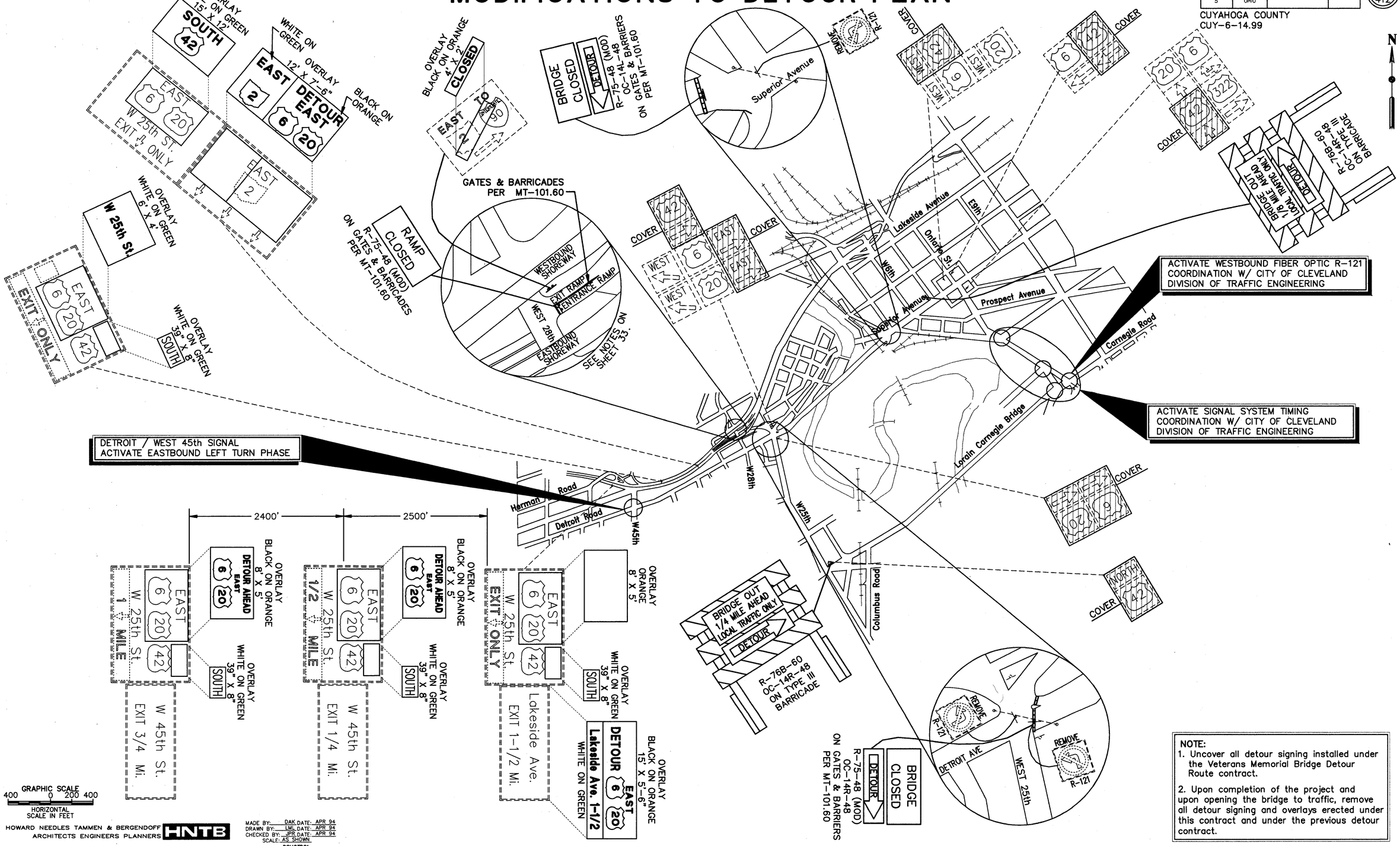

NOTE:
1. Uncover all detour signing installed under the Veterans Memorial Bridge Detour Route contract.
2. Upon completion of the project and upon opening the bridge to traffic, remove all detour signing and overlays erected under this contract and under the previous detour contract.

HOWARD NEEDLES TAMMEN & BERGENDOFF
ARCHITECTS ENGINEERS PLANNERS HNTB

MADE BY: DAK DATE: APR 94
DRAWN BY: LML DATE: APR 94
CHECKED BY: JPR DATE: APR 94
SCALE: AS SHOWN
DSMOTD01

MODIFICATIONS TO DETOUR PLAN

MAINTENANCE OF TRAFFIC SUBSUMMARY

FHWA REGION	STATE	PROJECT	
5	OHIO		

36/412

CUYAHOGA COUNTY
CUY-6-14.99

614

PHASE	LOCATION (REF.)	LOCATION INFORMATION STATION FROM	TO	SIDE	TEMPORARY WORD ON PAVEMENT, 72" CLASS I, 740.05, TYPE C (EACH)	TEMPORARY WORD ON PAVEMENT, 72" CLASS I, 642 PAINT (EACH)	TEMPORARY LANE ARROW, CLASS I, 740.05, TYPE C (EACH)	TEMPORARY LANE ARROW CLASS I, 642 PAINT (EACH)	TEMPORARY STOP LINE, CLASS I, 740.05, TYPE C (L.F.)	TEMPORARY STOP LINE, CLASS I, 642 PAINT (L.F.)	TEMPORARY TRANSVERSE LINE CLASS I, 740.05, TYPE C (L.F.)	TEMPORARY DOTTED LINE CLASS I, 740.05, TYPE C (L.F.)	TEMPORARY CHANNELIZING LINE, CLASS I, 740.05, TYPE C (L.F.)	TEMPORARY CHANNELIZING LINE CLASS I, 642 PAINT (L.F.)	TEMPORARY EDGE LINE, CLASS I, 740.05, TYPE C (MILE)	TEMPORARY EDGE LINE CLASS I, 642 PAINT (MILE)	TEMPORARY CENTER LINE, CLASS I, 740.05, TYPE C (MILE)	TEMPORARY CENTER LINE, CLASS I, 642 PAINT (MILE)	TEMPORARY LANE LINE, CLASS I, 740.05, TYPE C (MILE)	TEMPORARY LANE LINE, CLASS I, 642 PAINT (MILE)
PHASE I	WEST 25th ST.	7+65	13+70	RT											.11(W)						
		11+70	13+70	RT											.15(Y)						.04
		11+70	19+40	RT											.15(Y)						
		14+60	19+40	LT					16												
		14+76	19+25	LT																	
		17+45	19+25	RT									180								
		18+25		RT			1														
		18+55		RT		1															
		18+95		RT			1														
	DETROIT AVE.	96+40	100+00	RT											.07(W)						
PHASE IA	WEST 25th ST.	11+70	20+00	RT											.15(W)						
		16+40	19+24	LT					15								.05				
		19+22	19+24	LT																	
PHASE IIA	WEST 25th ST.	16+50	19+00	RT											.05(W)						
		14+27	19+35	LT																	
		14+27	19+25	℄														.09			
		16+55	20+23	RT											.07(Y)						
		19+25	20+23	LT											.02(Y)						
		19+35	20+13	LT											.02(W)						
PHASE II	WEST 25th ST.	14+27	17+57	RT																	.09
		17+40	19+25	RT										185							
		17+75	19+55	RT												.04(W)					
		18+25		RT																	
		18+53	20+13	LT				1									.03(W)				
		18+55		RT		1															
		18+95		RT																	
		19+23	19+25	RT						24											
	WEST 28th ST.	–	–	RT					18												
		–	–	LT					18												
	DETROIT AVE.	83+20	88+10	RT											.09(W)						
		86+84	88+49	RT											.03(Y)						
		88+49	88+64	RT								30(Y)									
		89+30	92+05	LT											.05(W)						
		89+35	99+80	LT											.07(Y)						
		89+70	90+00	LT												.13(Y)					
		97+29	97+48	RT						19											
PHASE III	HURON ROAD	0+90	7+95	RT											.13(Y)						
		1+30	7+45	LT											.12(Y)						
		1+30	1+32	LT																	
		1+32							28												
	WEST 9th ST.	0+90	7+05	LT											.12(Y)						
		0+90	0+92	LT			1		33												
		1+00		LT																	
		1+40		LT			1														
		1+70		LT			1														
	SUPERIOR AVE.	131+25	131+32	RT											.03(Y)						
		0+74	0+94	LT					25												
		0+86	2+76	LT									190								
		1+04		LT			2														
		1+44		LT																	
		1+74		LT			2														
		6+62	9+77	LT									315								
		6+62	8+45	LT							310(W)										
		6+70	8+45	LT			1						175								
		7+00		℄																	
		7+40		℄		1															
		7+70		℄			1														
		131+00	5+35	LT											.11(Y)						
SHEET SUBTOTALS:					5	1	10	2	153	43	310	30	860	185	1.54	0.20	0.05	0.09	0.06	0.28	
SHEET NO.					37		38		40				41							42-43	

HOWARD NEEDLES TAMMEN & BERGENDOFF
ARCHITECTS ENGINEERS PLANNERS HNTB

MADE BY: DAK DATE: APR 94
DRAWN BY: MJG DATE: APR 94
CHECKED BY: JPR DATE: APR 94
SCALE: NONE
DSMOTPQ1

MAINTENANCE OF TRAFFIC SUBSUMMARY

MAINTENANCE OF TRAFFIC SUBSUMMARY

FHWA REGION	STATE	PROJECT	
5	OHIO		

CUYAHOGA COUNTY
CUY-6-14.99

36A / 412

614

SHEET NO.	PHASE	LOCATION (REF.)	STATION FROM	STATION TO	SIDE	TEMPORARY WORD ON PAVEMENT, 72" CLASS I, 740.05, TYPE C (EACH)	TEMPORARY WORD ON PAVEMENT, 72" CLASS I, 642 PAINT (EACH)	TEMPORARY LANE ARROW, CLASS I, 740.05, TYPE C (EACH)	TEMPORARY LANE ARROW CLASS I, 642 PAINT (EACH)	TEMPORARY STOP LINE, CLASS I, 740.05, TYPE C (L.F.)	TEMPORARY STOP LINE, CLASS I, 642 PAINT (L.F.)	TEMPORARY TRANSVERSE LINE CLASS I, 740.05, TYPE C (L.F.)	TEMPORARY DOTTED LINE CLASS I, 740.05, TYPE C (L.F.)	TEMPORARY CHANNELIZING LINE, CLASS I, 740.05, TYPE C (L.F.)	TEMPORARY CHANNELIZING LINE CLASS I, 642 PAINT (L.F.)	TEMPORARY EDGE LINE, CLASS I, 740.05, TYPE C (MILE)	TEMPORARY EDGE LINE CLASS I, 642 PAINT (MILE)	TEMPORARY CENTER LINE, CLASS I, 740.05, TYPE C (MILE)	TEMPORARY CENTER LINE, CLASS I, 642 PAINT (MILE)	TEMPORARY LANE LINE, CLASS I, 740.05, TYPE C (MILE)	TEMPORARY LANE LINE, CLASS I, 642 PAINT (MILE)
43A	PHASE I	SHOREWAY	8+12	19+00	RT											.21					
			22+65	24+16	LT											.04		.02			
			21+74	23+02	RT																
			21+74	22+54	LT											.04					
			21+74	21+76	LT/RT					12											
			20+25	21+45	RT											.03					
			20+43	21+10	RT											.03					
			20+51	20+53	LT/RT					12											
			21+45	21+53	LT					12											
			21+53	21+83	LT											.01					
43B	PHASE I	WEST 25TH ST	24+50	22+42	LT/RT											.08(Y)					
	STAGE 1		22+42	21+90	LT													.01			
			21+90	20+88	LT								102								
			20+88	20+50	LT													.01			
			22+35	21+90	LT											.02(W)					
			22+42	21+15	LT/RT											.06(W)					
			21+92	21+90	LT					12											
			21+75	21+84	LT					12											
			21+84	20+84	LT											.02(W)					
			20+50	20+52	LT					11											
			20+00	21+10	RT											.04(W)					
	STAGE 2		20+43	21+35	RT											.04(W)					
			21+42	21+95	RT											.02(W)					
43C	PHASE IIA	WEST 25TH ST	23+42	22+01	LT/RT											.06(Y)					
			22+40	22+00	LT											.02(W)					
			22+05	22+07	LT					12											
			21+38	20+43	LT/RT											.04(Y)					
			20+50	20+52	LT					4											
43D	PHASE II	WEST 25TH ST	23+84	22+25	LT											.05(W)					
	STAGE 1		22+40	21+80	LT											.03(W)					
			22+40	22+12	LT													.01			
			22+04	22+06	LT/RT					12											
			22+04	20+84	RT								120								
			21+84	20+26	LT											.04(W)					
			20+84	20+46	RT													.01			
			20+46	20+48	RT					12											
	STAGE 2	SUBWAY RAMP	16+46	17+98	RT											.03(W)					
			16+46	19+28	RT											.06(Y)					
			17+48	19+15	LT											.03(Y)					
		WEST 25TH ST	22+42	21+98	LT											.03(W)					
			21+77	21+00	LT/RT											.02(Y)					
			21+10	21+02	LT					12											
			21+12	21+10	RT					14											
			21+02	20+24	LT											.02(W)					
			20+46	20+48	LT/RT					10											
	STAGE 3	SUBWAY RAMP	18+10	18+65	RT										60						
			18+55	18+70	RT						26										
			18+10	18+75	LT/RT																.01
		WEST 25TH ST	22+40	22+12	RT										28						
			22+14	22+12	LT/RT						26										
			20+80	20+48	LT										60						
			20+67		LT				3												
			20+48	20+50	LT						35										
SHEET SUBTOTALS:						0	0	0	3	147	87	0	222	0	148	1.07	0	0.06	0	0	0.01
SHEET 36 SUBTOTALS:						5	1	10	2	153	43	310	30	860	185	1.54	0.20	0.05	0.09	0.06	0.28
TOTALS:						5	1	10	5	300	130	310	252	860	333	2.61	0.20	0.11	0.09	0.06	0.29

HOWARD NEEDLES TAMMEN & BERGENDOFF
ARCHITECTS ENGINEERS PLANNERS
HNTB

MADE BY: DAK DATE: JUN 94
DRAWN BY: DAK DATE: JUN 94
CHECKED BY: JPR DATE: JUN 94
SCALE: NONE
DSMOTPQ1

TUNNEL WORK - MAINTENANCE OF TRAFFIC

FHWA REGION	STATE	PROJECT	
5	OHIO		

37/412

CUYAHOGA COUNTY
CUY-6-14.99

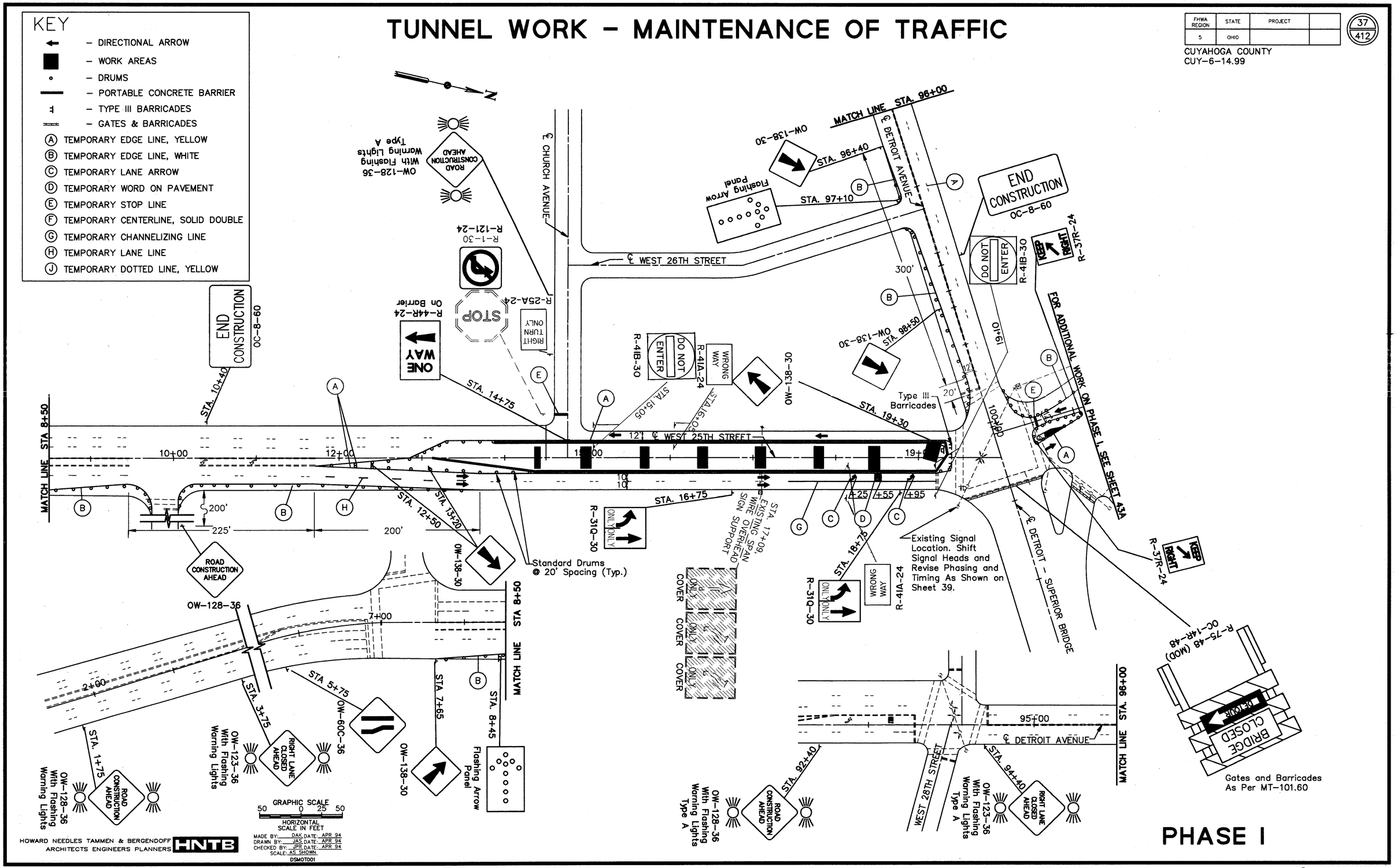

TUNNEL WORK – MAINTENANCE OF TRAFFIC

FHWA REGION	STATE	PROJECT	
5	OHIO		

38/412

CUYAHOGA COUNTY
CUY–6–14.99

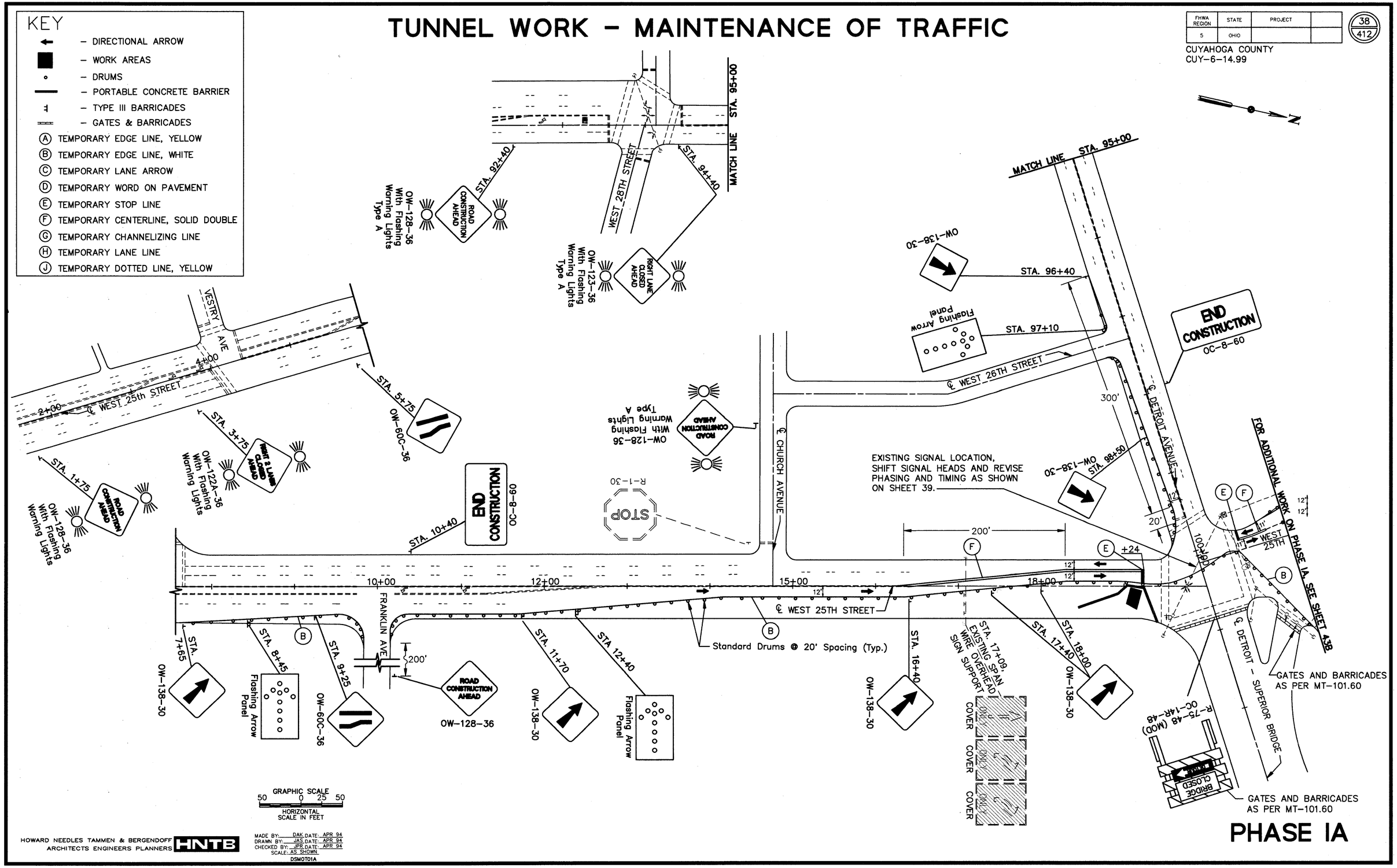

HOWARD NEEDLES TAMMEN & BERGENDOFF
ARCHITECTS ENGINEERS PLANNERS HNTB

MADE BY: DAK DATE: APR 94
DRAWN BY: JAS DATE: APR 94
CHECKED BY: JPR DATE: APR 94
SCALE: AS SHOWN
DSMOT01A

TUNNEL WORK – MAINTENANCE OF TRAFFIC

TEMPORARY SIGNAL TIMING AND PHASING PLAN

FHWA REGION	STATE	PROJECT	
5	OHIO		

39
412

CUYAHOGA COUNTY
CUY-6-14.99

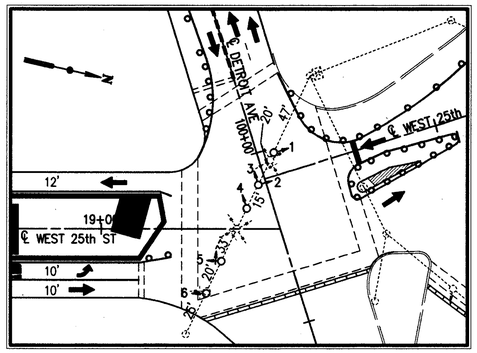

PHASE I

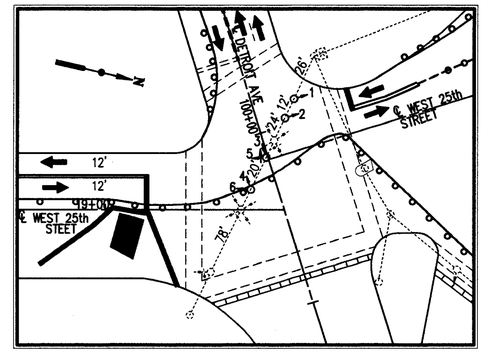

PHASE IA

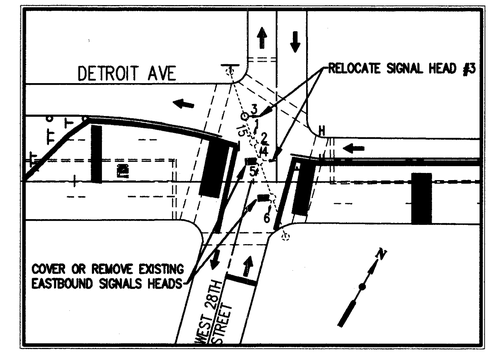

PHASES IIA & II

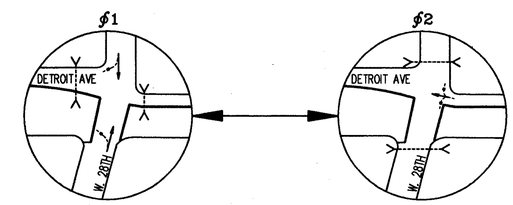

TEMPORARY PHASING DETAIL

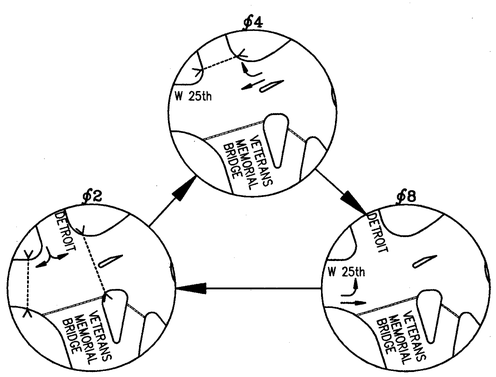

TEMPORARY PHASING DETAIL

TRAFFIC SIGNAL TIMING AND DISPLAY CHART

SYS. C/L = 90 SEC.					START IN: FLASH 8 SEC. ALL RED ●							FIRST PHASE: ϕ4 GREEN ● YELLOW ○			
DETROIT AVE./ WEST 25 th ST.					ϕ4				ϕ8			ϕ2			
GREEN					26				23			26			
WALK					10							8			
PEDESTRIAN CLEARANCE (FDW)						16							18		
YELLOW							3			3				3	
ALL RED								2			2				2
STREET	DIRECTION	SIGNAL	LENS	WEST-FLASH PRE-EMPT	INTERVAL COLORS ϕ4 1	2	3	4	ϕ8 5	6	7	ϕ2 8	9	10	11
WEST 25th STREET	SB	1,2	R	R				R	R	R	R	R	R	R	R
			Y				Y								
			G		G	G									
	NB	5	R			R	R	R			R	R	R	R	R
			Y	Y						Y					
			G						G						
			G						G						
	NB	6	R			R	R	R			R	R	R	R	R
			Y	Y						Y					
			G						G						
WEST CROSSWALK	NB		DW			FDW	DW	DW	DW	DW	DW	DW	DW	DW	DW
	SB		W		W										
DETROIT AVENUE	EB	3,4	R	R		R	R	R	R	R	R				R
			Y											Y	
			G									G	G		
NORTH & SOUTH CROSSWALK	WB		DW		DW	DW	DW	DW	DW	DW	DW		FDW	DW	DW
	EB		W									W			

SIGNAL TIMING AND DISPLAY CHART

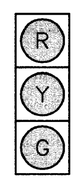

12" Lens
1,2,3,4,6

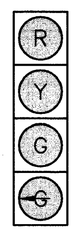

12" Lens
5

SIGNAL HEAD DETAIL

TRAFFIC SIGNAL TIMING AND DISPLAY CHART

SYS. C/L = 60 SEC.					START IN: FLASH 8 SEC. ALL RED ●				FIRST PHASE: ϕ1 GREEN ● YELLOW ○			
DETROIT AVE./ WEST 28 th ST.					ϕ1				ϕ2			
GREEN					32				18			
WALK					12				9			
PEDESTRIAN CLEARANCE (FDW)						20				9		
YELLOW							3				3	
ALL RED								2				2
STREET	DIRECTION	SIGNAL	LENS	WEST-FLASH PRE-EMPT	INTERVAL COLORS ϕ1 1	2	3	4	ϕ2 5	6	7	8
WEST 28th STREET	SB	1,2	R	R					R	R	R	R
	NB	5,6	Y				Y					
			G		G	G						
WEST & EAST CROSSWALK	NB		DW			FDW	DW	DW	DW	DW	DW	DW
	SB		W		W							
DETROIT AVENUE	WB	3,4	R	R		R	R	R				
			Y								Y	
			G						G	G		
NORTH & SOUTH CROSSWALK	WB		DW		DW	DW	DW	DW		FDW	DW	DW
	EB		W						W			

SIGNAL TIMING AND DISPLAY CHART

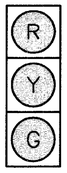

12" Lens
1-6

SIGNAL HEAD DETAIL

NOTE:
MAINTAIN THE PHASING AND TIMING AT THIS INTERSECTION AS SHOWN ON THIS SHEET THROUGHOUT THE DURATION OF THE BRIDGE CLOSURE. MODIFICATIONS CAN BE MADE TO THE TIMING ON AN AS NEED BASIS AS DIRECTED BY THE ENGINEER.

GRAPHIC SCALE
40 0 20 40
HORIZONTAL SCALE IN FEET

HOWARD NEEDLES TAMMEN & BERGENDOFF
ARCHITECTS ENGINEERS PLANNERS HNTB

MADE BY: DAK DATE: APR 94
DRAWN BY: LML DATE: APR 94
CHECKED BY: JPR DATE: APR 94
SCALE: AS SHOWN
DSMOTX02

PHASES I & IA

PHASES II & IIA

TUNNEL WORK - MAINTENANCE OF TRAFFIC

FHWA REGION	STATE	PROJECT	
5	OHIO		

40/412

CUYAHOGA COUNTY
CUY-6-14.99

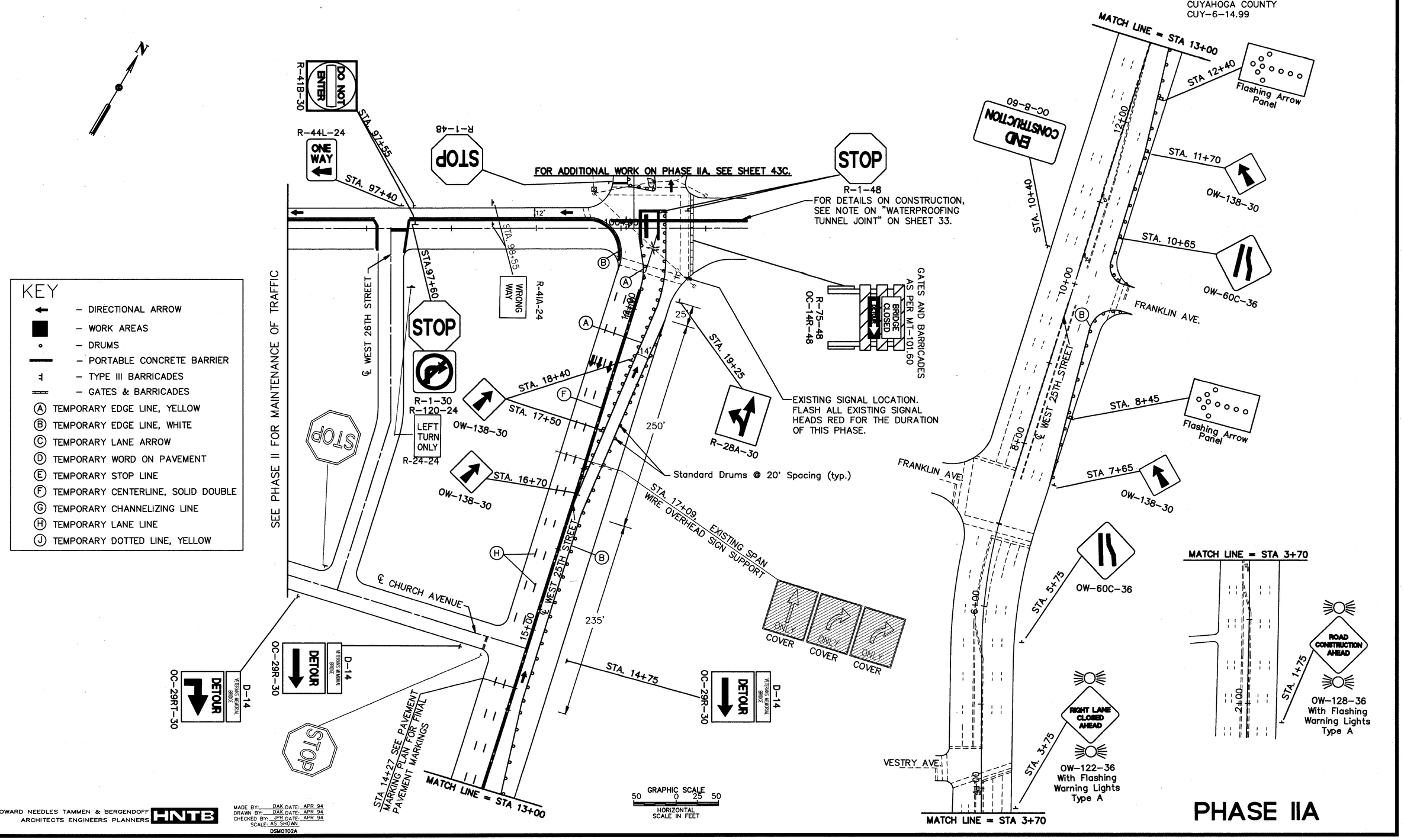

HOWARD NEEDLES TAMMEN & BERGENDOFF
ARCHITECTS ENGINEERS PLANNERS HNTB

MADE BY: DAK DATE: APR 94
DRAWN BY: DAK DATE: APR 94
CHECKED BY: JPR DATE: APR 94
SCALE: AS SHOWN
DSMOT02A

TUNNEL WORK - MAINTENANCE OF TRAFFIC

TUNNEL WORK - MAINTENANCE OF TRAFFIC

FHWA REGION	STATE	PROJECT	
5	OHIO		

41
412

CUYAHOGA COUNTY
CUY-6-14.99

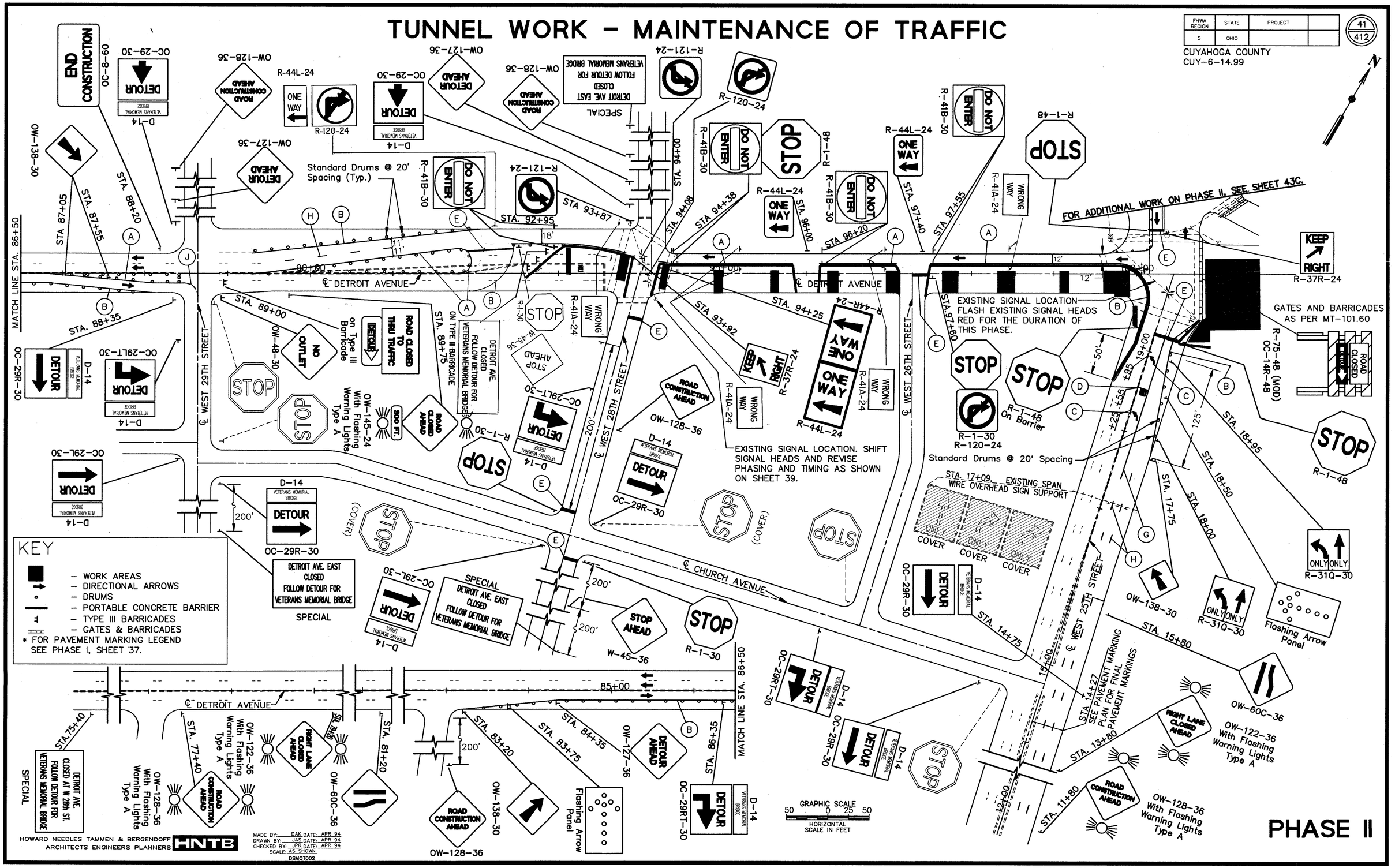

HOWARD NEEDLES TAMMEN & BERGENDOFF
ARCHITECTS ENGINEERS PLANNERS HNTB

MADE BY: DAK DATE: APR 94
DRAWN BY: JAS DATE: APR 94
CHECKED BY: JPR DATE: APR 94
SCALE: AS SHOWN
DSMOT002

TUNNEL WORK – MAINTENANCE OF TRAFFIC

FHWA REGION	STATE	PROJECT	
5	OHIO		

42/412

CUYAHOGA COUNTY
CUY–6–14.99

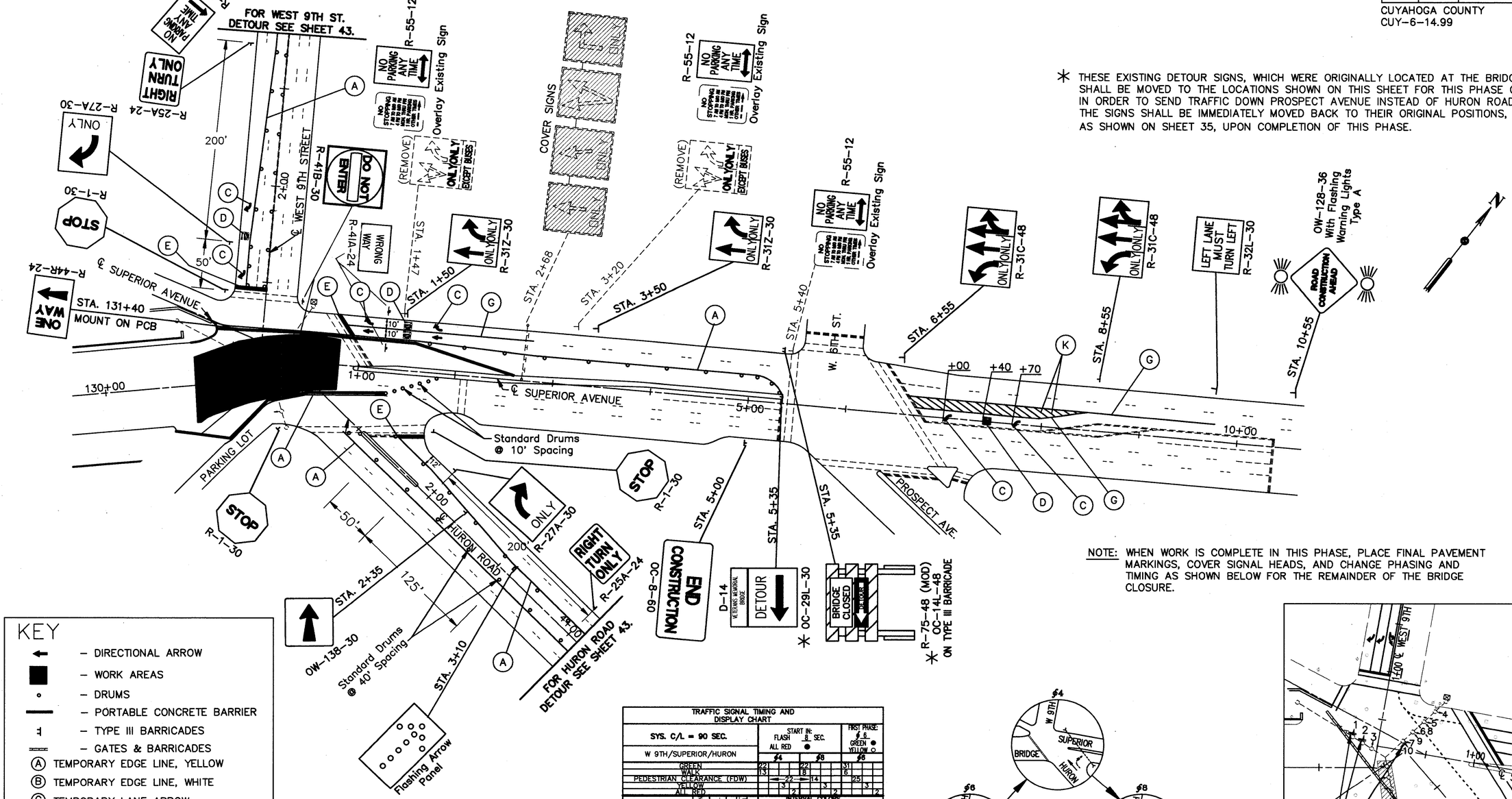

* THESE EXISTING DETOUR SIGNS, WHICH WERE ORIGINALLY LOCATED AT THE BRIDGE, SHALL BE MOVED TO THE LOCATIONS SHOWN ON THIS SHEET FOR THIS PHASE ONLY IN ORDER TO SEND TRAFFIC DOWN PROSPECT AVENUE INSTEAD OF HURON ROAD. THE SIGNS SHALL BE IMMEDIATELY MOVED BACK TO THEIR ORIGINAL POSITIONS, AS SHOWN ON SHEET 35, UPON COMPLETION OF THIS PHASE.

NOTE: WHEN WORK IS COMPLETE IN THIS PHASE, PLACE FINAL PAVEMENT MARKINGS, COVER SIGNAL HEADS, AND CHANGE PHASING AND TIMING AS SHOWN BELOW FOR THE REMAINDER OF THE BRIDGE CLOSURE.

KEY

- ← – DIRECTIONAL ARROW
- ■ – WORK AREAS
- ∘ – DRUMS
- — – PORTABLE CONCRETE BARRIER
- ⊥ – TYPE III BARRICADES
- ═ – GATES & BARRICADES
- Ⓐ TEMPORARY EDGE LINE, YELLOW
- Ⓑ TEMPORARY EDGE LINE, WHITE
- Ⓒ TEMPORARY LANE ARROW
- Ⓓ TEMPORARY WORD ON PAVEMENT
- Ⓔ TEMPORARY STOP LINE
- Ⓕ TEMPORARY CENTERLINE, SOLID DOUBLE
- Ⓖ TEMPORARY CHANNELIZING LINE
- Ⓗ TEMPORARY LANE LINE
- Ⓚ TEMPORARY TRANSVERSE LINES, WHITE

TRAFFIC SIGNAL TIMING AND DISPLAY CHART

SYS. C/L = 90 SEC.					START IN: FLASH / ALL RED — 8 SEC.												FIRST PHASE: φ6 GREEN ● YELLOW ○			
W 9TH/SUPERIOR/HURON					φ4				φ8				φ6							
GREEN					22				22				31							
WALK					13				8				6							
PEDESTRIAN CLEARANCE (FDW)						22			14				25							
YELLOW						3				3				3						
ALL RED						2				2				2						
STREET	DIRECTION	SIGNAL	LENS	LENS INTERVAL FLASH	INTERVAL MATRIX															
					φ4				φ8				φ6							
					1	2	3	4	5	6	7	8	9	10	11	12				
WEST 9th STREET	SB	1,2,3	R	R	R	R	R	R					R	R	R	R				
			Y								Y									
			G						G	G										
WEST CROSSWALK	NB		DW		DW	DW	DW	DW		FDW	DW	DW	DW	DW	DW	DW				
	SB		W						W											
SUPERIOR AVENUE	WB	4,5,6,7	R	R	R	R	R	R	R	R	R	R				R				
			Y												Y					
			G										G	G						
NORTH & SOUTH CROSSWALK	EB		DW		DW	DW	DW	DW	DW	DW	DW	DW		FDW	DW	DW				
	WB		W										W							
HURON	NB	8,9,10	R	R					R	R	R	R	R	R	R	R				
			Y				Y													
			G		G	G														
EAST CROSSWALK	NB		DW			FDW	FDW	FDW	FDW	FDW	DW	DW	DW	DW	DW	DW				
	SB		W		W															

SIGNAL TIMING AND DISPLAY CHART

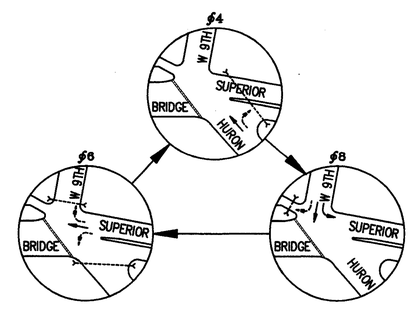

TEMPORARY PHASING DETAIL

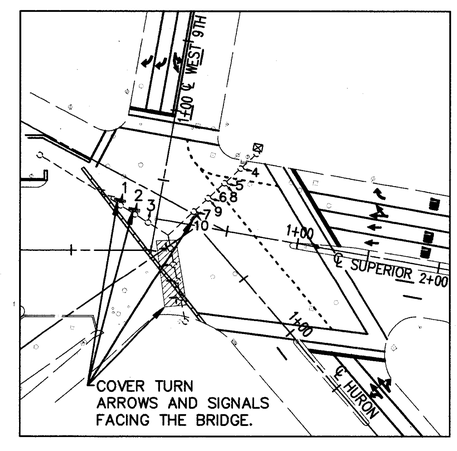

PHASE III

HOWARD NEEDLES TAMMEN & BERGENDOFF
ARCHITECTS ENGINEERS PLANNERS HNTB

MADE BY: DAK DATE: APR 94
DRAWN BY: JAS DATE: APR 94
CHECKED BY: JPR DATE: APR 94
SCALE: AS SHOWN
DSMOT003

GRAPHIC SCALE
50 0 25 50
HORIZONTAL SCALE IN FEET

TUNNEL WORK - MAINTENANCE OF TRAFFIC

FHWA REGION	STATE	PROJECT	
5	OHIO		

43/412

CUYAHOGA COUNTY
CUY-6-14.99

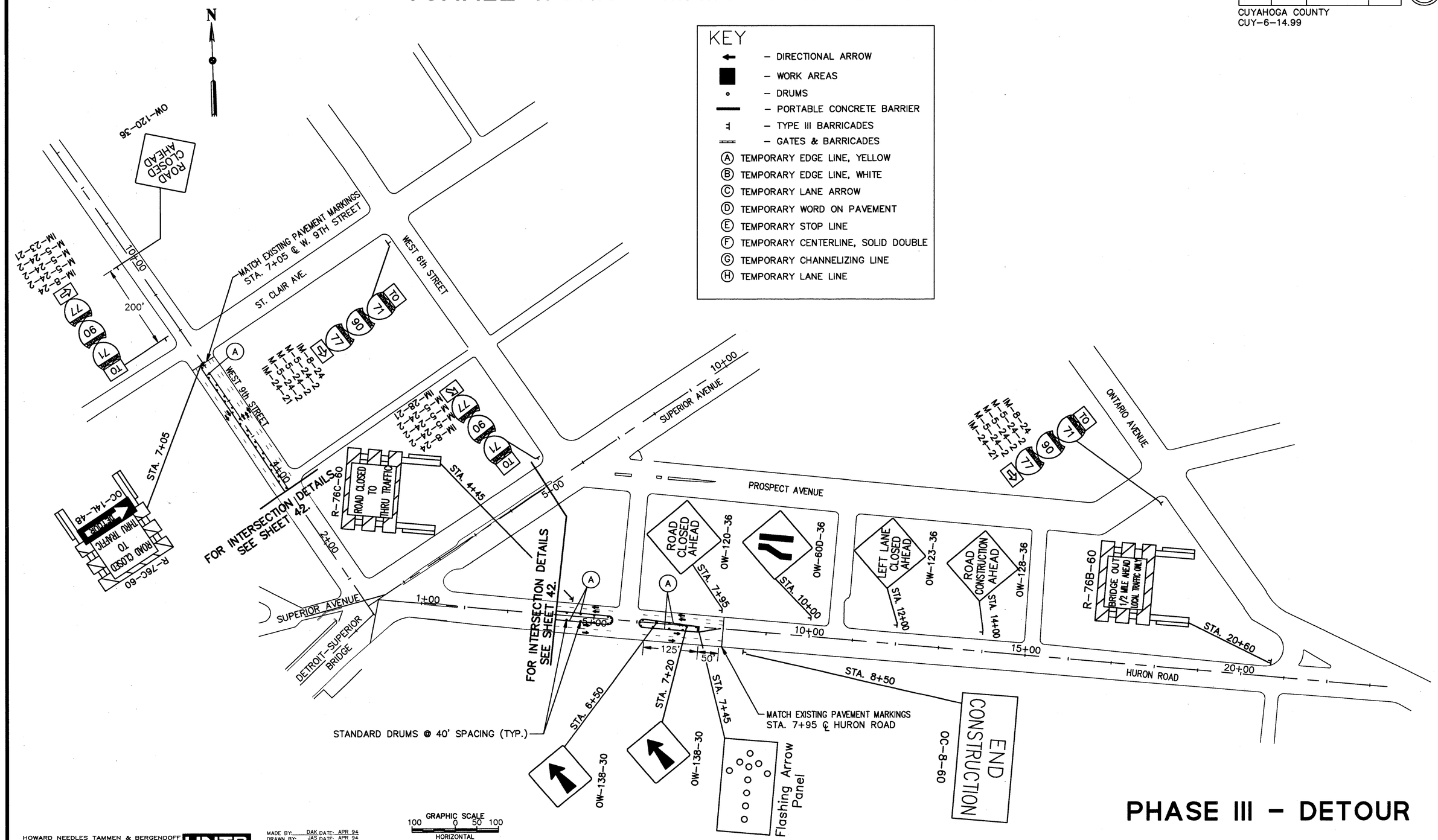

PHASE III - DETOUR

HOWARD NEEDLES TAMMEN & BERGENDOFF
ARCHITECTS ENGINEERS PLANNERS HNTB

MADE BY: DAK DATE: APR 94
DRAWN BY: JAS DATE: APR 94
CHECKED BY: JPR DATE: APR 94
SCALE: SEE ABOVE
DSMOTO3D

PAVEMENT REPLACEMENT – MAINTENANCE OF TRAFFIC

FHWA REGION	STATE	PROJECT	
5	OHIO		

43A / 412

CUYAHOGA COUNTY
CUY–6–14.99

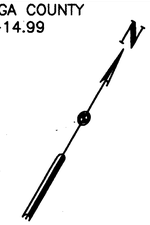

KEY

- ← – DIRECTIONAL ARROW
- – WORK AREAS
- • – DRUMS
- – GATES & BARRICADES
- (A) TEMPORARY EDGE LINE, YELLOW
- (B) TEMPORARY EDGE LINE, WHITE
- (C) TEMPORARY LANE ARROW
- (D) TEMPORARY WORD ON PAVEMENT
- (E) TEMPORARY STOP LINE
- (F) TEMPORARY CENTERLINE, SOLID DOUBLE
- (G) TEMPORARY CHANNELIZING LINE
- (H) TEMPORARY LANE LINE
- (J) TEMPORARY DOTTED LINE, YELLOW

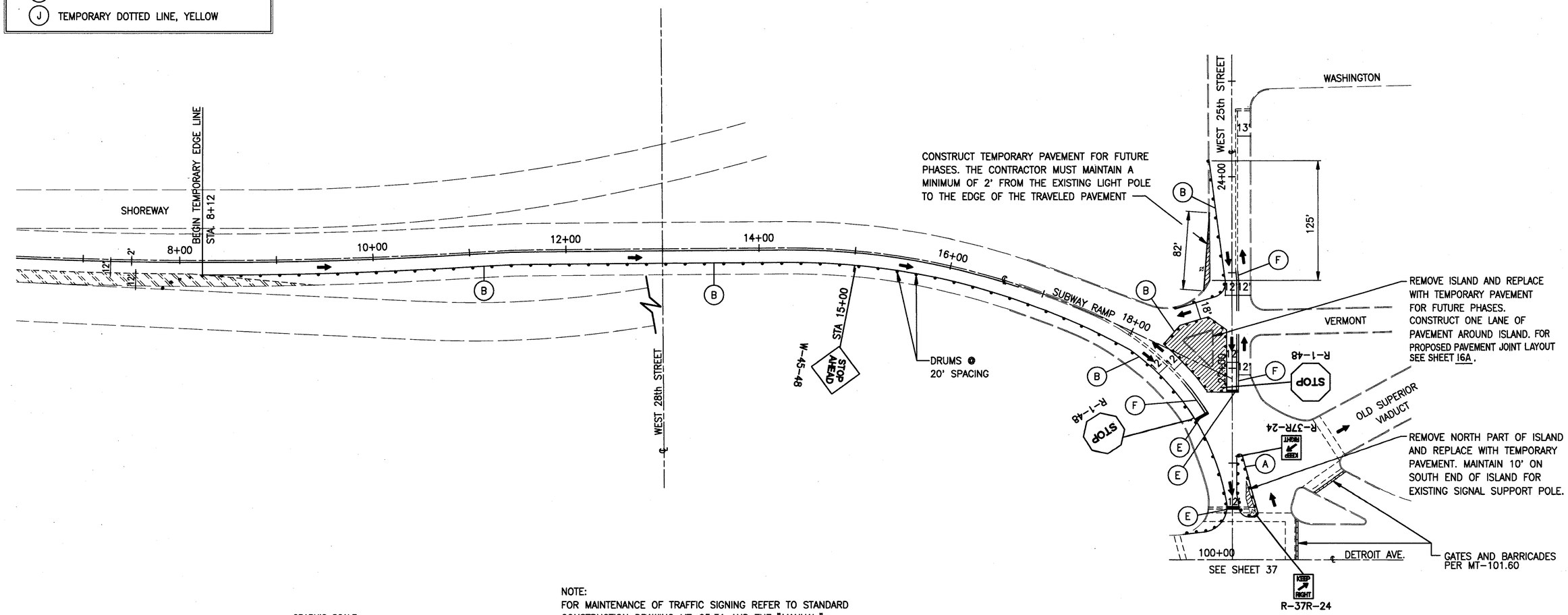

NOTE:
FOR MAINTENANCE OF TRAFFIC SIGNING REFER TO STANDARD CONSTRUCTION DRAWING MT–95.31 AND THE "MANUAL."

GRAPHIC SCALE
50 0 25 50
HORIZONTAL SCALE IN FEET

HOWARD NEEDLES TAMMEN & BERGENDOFF
ARCHITECTS ENGINEERS PLANNERS HNTB

MADE BY: DAK DATE: JUNE 94
DRAWN BY: LML DATE: JUNE 94
CHECKED BY: JPR DATE: JUNE 94
SCALE: AS SHOWN
DSMOT--1

PHASE I

PAVEMENT REPLACEMENT – MAINTENANCE OF TRAFFIC

PAVEMENT REPLACEMENT - MAINTENANCE OF TRAFFIC

FHWA REGION	STATE	PROJECT	
5	OHIO		

43B
412

CUYAHOGA COUNTY
CUY-6-14.99

KEY

- ← – DIRECTIONAL ARROW
- ▨ – WORK AREAS
- • – DRUMS
- ═ – GATES & BARRICADES
- (A) TEMPORARY EDGE LINE, YELLOW
- (B) TEMPORARY EDGE LINE, WHITE
- (C) TEMPORARY LANE ARROW
- (D) TEMPORARY WORD ON PAVEMENT
- (E) TEMPORARY STOP LINE
- (F) TEMPORARY CENTERLINE, SOLID DOUBLE
- (G) TEMPORARY CHANNELIZING LINE
- (H) TEMPORARY LANE LINE
- (J) TEMPORARY DOTTED LINE, YELLOW

STAGE 1

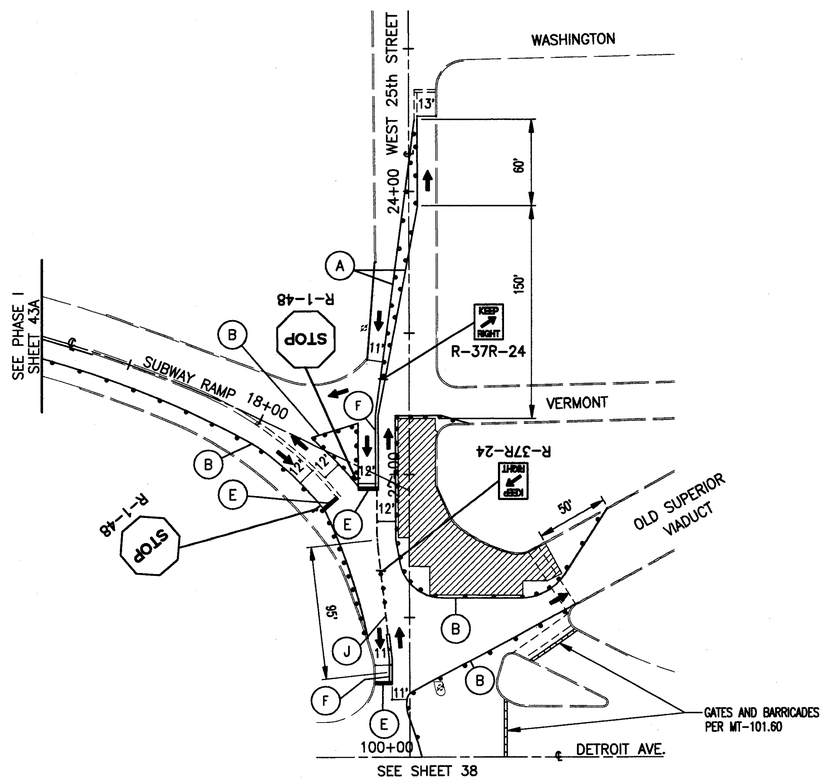

STAGE 2

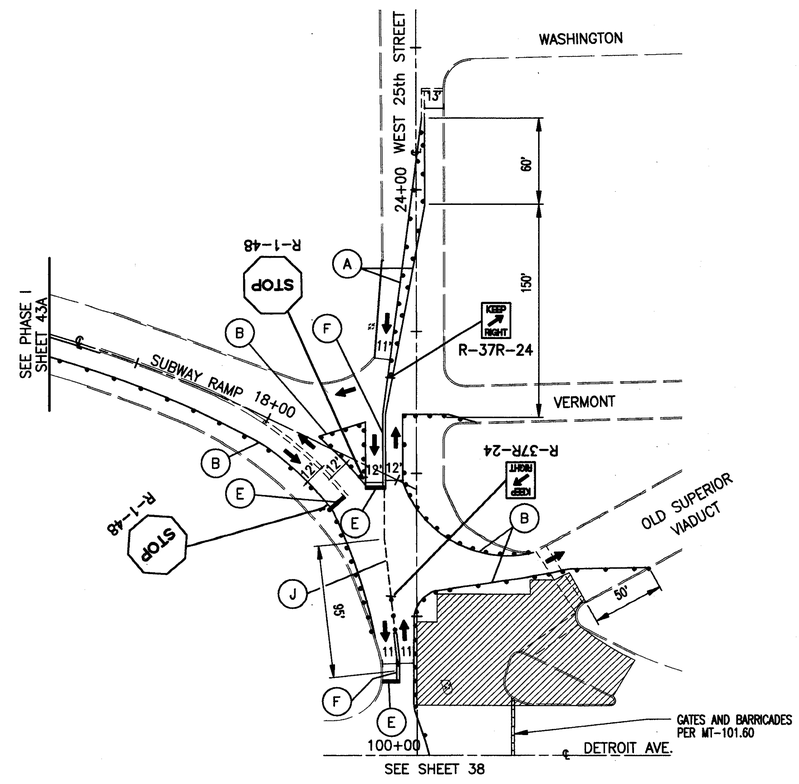

GRAPHIC SCALE
50 0 25 50
HORIZONTAL SCALE IN FEET

MADE BY: DAK DATE: JUNE 94
DRAWN BY: LML DATE: JUNE 94
CHECKED BY: JPR DATE: JUNE 94
SCALE: AS SHOWN
DSMOT-1A

HOWARD NEEDLES TAMMEN & BERGENDOFF
ARCHITECTS ENGINEERS PLANNERS HNTB

NOTE:
FOR MAINTENANCE OF TRAFFIC SIGNING REFER TO STANDARD CONSTRUCTION DRAWING MT-95.32 AND THE "MANUAL."

PHASE IA

PAVEMENT REPLACEMENT - MAINTENANCE OF TRAFFIC

PAVEMENT REPLACEMENT – MAINTENANCE OF TRAFFIC

FHWA REGION	STATE	PROJECT	
5	OHIO		

43C
412

CUYAHOGA COUNTY
CUY–6–14.99

KEY

- ← – DIRECTIONAL ARROW
- ▨ – WORK AREAS
- • – DRUMS
- ═ – GATES & BARRICADES
- (A) TEMPORARY EDGE LINE, YELLOW
- (B) TEMPORARY EDGE LINE, WHITE
- (C) TEMPORARY LANE ARROW
- (D) TEMPORARY WORD ON PAVEMENT
- (E) TEMPORARY STOP LINE
- (F) TEMPORARY CENTERLINE, SOLID DOUBLE
- (G) TEMPORARY CHANNELIZING LINE
- (H) TEMPORARY LANE LINE
- (J) TEMPORARY DOTTED LINE, YELLOW

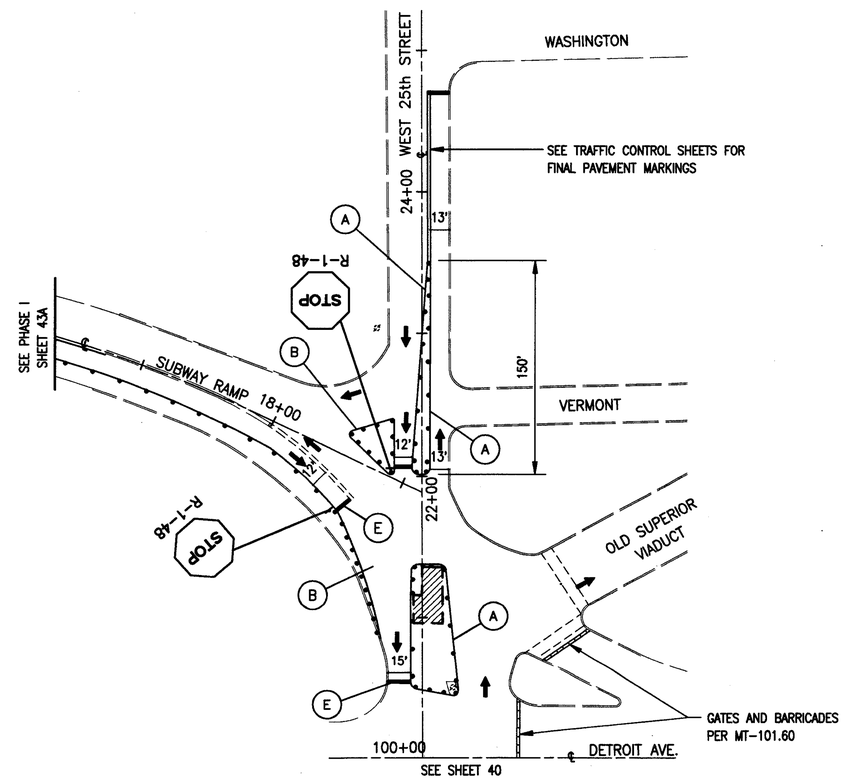

GRAPHIC SCALE
50 0 25 50
HORIZONTAL SCALE IN FEET

HOWARD NEEDLES TAMMEN & BERGENDOFF
ARCHITECTS ENGINEERS PLANNERS
HNTB

MADE BY: DAK DATE: JUNE 94
DRAWN BY: MJG DATE: JUNE 94
CHECKED BY: JPR DATE: JUNE 94
SCALE: AS SHOWN
DSMOT–2A

NOTE:
FOR MAINTENANCE OF TRAFFIC SIGNING REFER TO STANDARD CONSTRUCTION DRAWING MT–95.32 & THE MANUAL.

PHASE IIA

PAVEMENT REPLACEMENT – MAINTENANCE OF TRAFFIC

PAVEMENT REPLACEMENT – MAINTENANCE OF TRAFFIC

FHWA REGION	STATE	PROJECT	
5	OHIO		

43D / 412

CUYAHOGA COUNTY
CUY–6–14.99

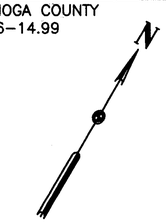

KEY

- ← – DIRECTIONAL ARROW
- ▨ – WORK AREAS
- • – DRUMS
- ═ – GATES & BARRICADES
- (A) TEMPORARY EDGE LINE, YELLOW
- (B) TEMPORARY EDGE LINE, WHITE
- (C) TEMPORARY LANE ARROW
- (D) TEMPORARY WORD ON PAVEMENT
- (E) TEMPORARY STOP LINE
- (F) TEMPORARY CENTERLINE, SOLID DOUBLE
- (G) TEMPORARY CHANNELIZING LINE
- (H) TEMPORARY LANE LINE
- (J) TEMPORARY DOTTED LINE, YELLOW

STAGE 1

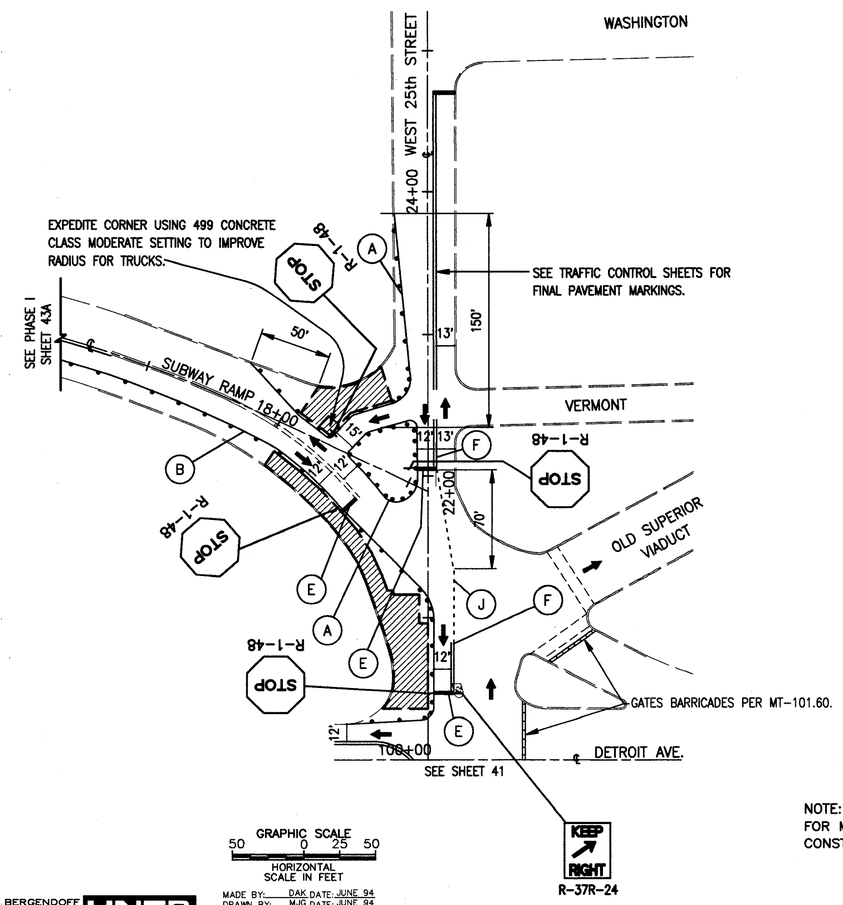

STAGE 2

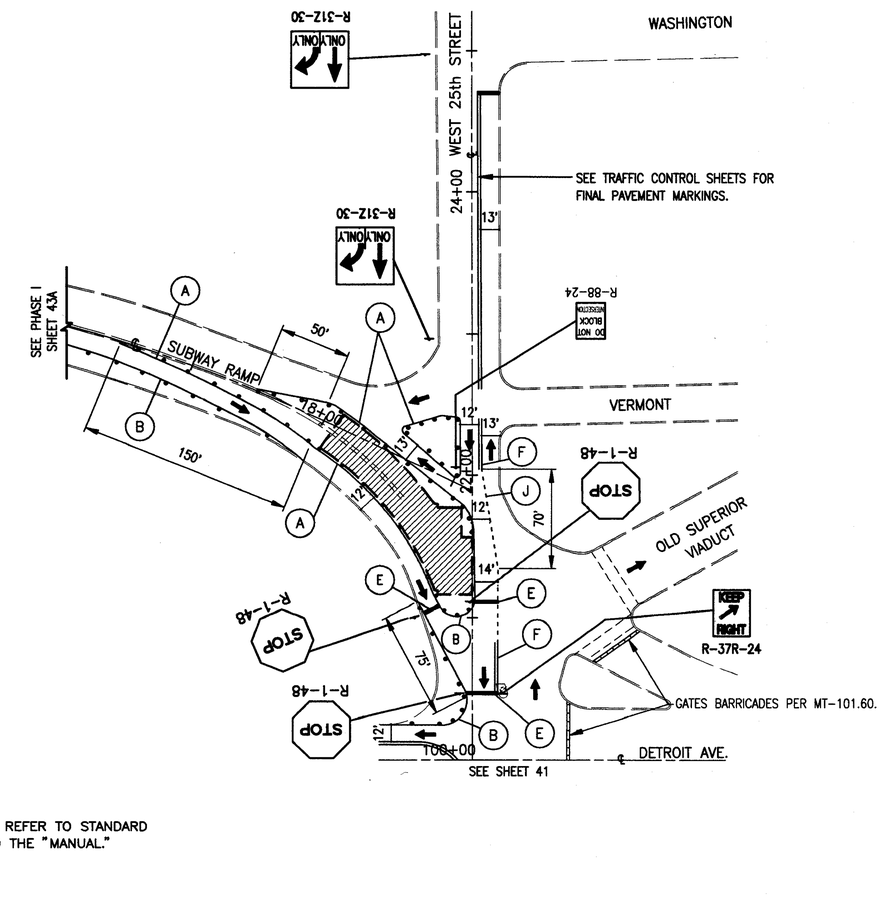

NOTE:
FOR MAINTENANCE OF TRAFFIC SIGNING REFER TO STANDARD CONSTRUCTION DRAWING MT–95.31 AND THE "MANUAL."

GRAPHIC SCALE
50 0 25 50
HORIZONTAL SCALE IN FEET

MADE BY: DAK DATE: JUNE 94
DRAWN BY: MJG DATE: JUNE 94
CHECKED BY: JPR DATE: JUNE 94
SCALE: AS SHOWN
DSMOT--2

HOWARD NEEDLES TAMMEN & BERGENDOFF
ARCHITECTS ENGINEERS PLANNERS
HNTB

PHASE II

PAVEMENT REPLACEMENT – MAINTENANCE OF TRAFFIC

CALC BY ____ DATE ____	CUY-6-14.99	OHIO	44
CHKD BY ____ DATE ____		FHWA REGION 5	412

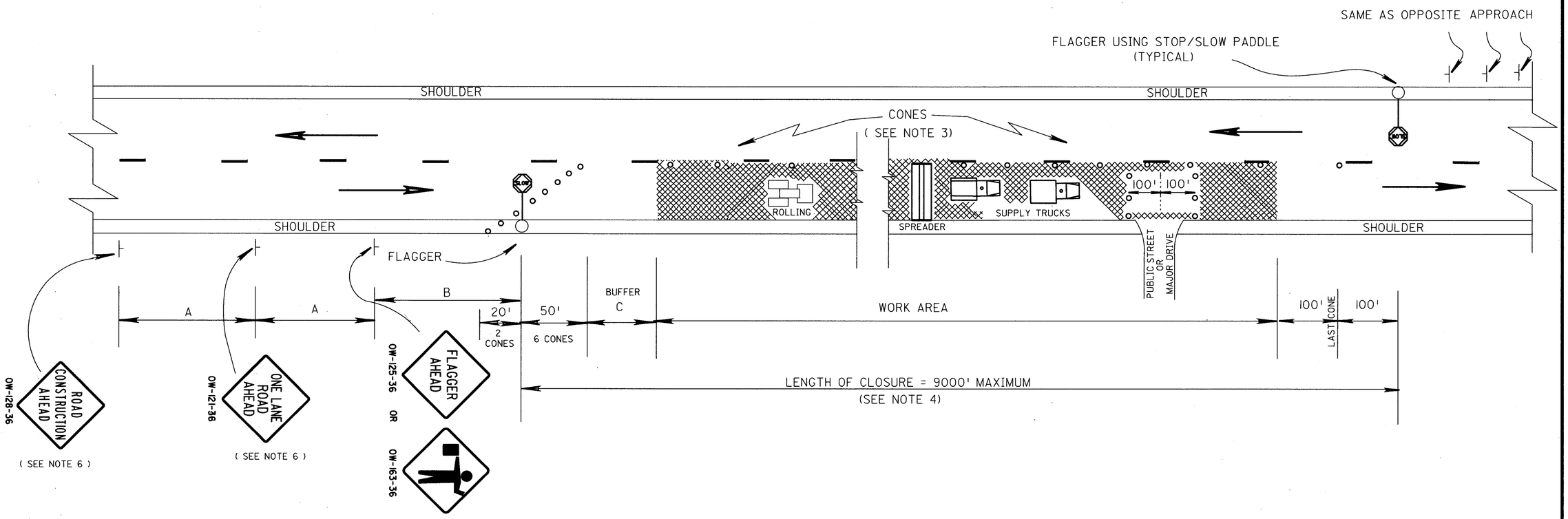

GENERAL NOTES:

1. THE LOCATION OF THE ADVANCE WARNING SIGNS SHOULD ONLY BE ADJUSTED TO PROVIDE FOR ADEQUATE SIGHT DISTANCE FOR THE EXISTING VERTICAL AND HORIZONTAL ROADWAY ALIGNMENT.

2. FLAGGERS, ONE FOR EACH DIRECTION SHALL BE USED TO CONTROL TRAFFIC CONTINUOUSLY FOR AS LONG AS A ONE LANE OPERATION IS IN EFFECT. THE FLAGGERS SHALL BE ABLE TO COMMUNICATE WITH EACH OTHER AT ALL TIMES.

3. CONES ON THE TAPERS SHALL BE SPACED AT 10' CENTER TO CENTER. CONES SHALL BE SPACED AT 200' CENTER TO CENTER PARALLEL TO THE CENTER LINE BUT 1 TO 2 FT. WITHIN THE CLOSED LANE. CONES MAY BE TEMPORARILY MOVED OFF THE ROAD IN THE IMMEDIATE VICINITY OF THE SUPPLY TRUCKS, PAVING SPREADER OR ROLLERS BUT SHALL BE IMMEDIATELY REPLACED WHEN THAT ACTIVITY HAS PASSED BY THE CONE LOCATION. CONES SHALL HAVE A MINIMUM HEIGHT OF 28 INCHES AND SHALL BE STABILIZED TO PREVENT THEM FROM BLOWING OVER. CLOSURES AT NIGHT SHALL USE DRUMS RATHER THAN CONES.

4. IT IS REQUIRED THAT THE LENGTH OF CLOSURE BE KEPT TO A MINIMUM AT ALL TIMES, AS DIRECTED BY THE ENGINEER.

   WHEN THE AMBIENT TEMPERATURE EXCEEDS 80 DEGREES F, THE ENGINEER MAY INCREASE THE LENGTH OF CLOSURE TO ALLOW FOR SUFFICIENT COOLING OF NEW PAVEMENT.

4. CONT. THE ENGINEER MAY SHORTEN THE MAXIMUM ALLOWABLE LENGTH OF CLOSURE TO RELIEVE EXCESSIVE TRAFFIC BACKUPS OR TO IMPROVE TRAFFIC OPERATION.

   ALL TRAFFIC CONTROL SIGNS, CONES (OR DRUMS), AND THE FLAGGER SHALL BE MOVED FORWARD AS A GROUP BEFORE THE CLOSURE REACHES THE MAXIMUM ALLOWABLE LENGTH. ONLY ONE SIDE OF THE ROAD SHALL BE CLOSED AT ANY TIME.

5. WITHIN THE LENGTH OF CLOSURE, PROVISION SHALL BE MADE TO CONTROL TRAFFIC ENTERING FROM INTERSECTING STREETS AND MAJOR DRIVES AS NECESSARY TO PREVENT WRONG WAY MOVEMENTS AND TO KEEP VEHICLES OFF OF NEW PAVEMENT NOT READY FOR TRAFFIC. AS A MINIMUM, THE CONTRACTOR SHALL:

   A) PROVIDE AN ADDITIONAL FLAGGER AT EVERY PUBLIC STREET INTERSECTION AND MAJOR DRIVEWAY AND -
   B) PLACE A ROW OF 3 CONES ACROSS THE CLOSED LANE APPROXIMATELY 100 FT. ON EACH SIDE OF AN INTERSECTION.
   C) ADDITIONAL ROWS OF 3 CONES EACH SHALL BE PLACED ACROSS THE CLOSED LANE AT A MAXIMUM SPACING OF 1000 FT. BETWEEN ROWS OF CONES.

   ROWS OF CONES MAY BE MOVED OFF THE ROAD TO ALLOW PASSAGE OF ROLLERS, PAVING SPREADER OR SUPPLY TRUCKS BUT SHALL BE MOVED BACK ONTO THE ROAD WHEN THE ACTIVITY HAS PASSED.

6. THE TYPE A FLASHING WARNING LIGHTS ARE REQUIRED ON THE "ROAD CONSTRUCTION AHEAD" (OW-128) AND THE "ONE LANE ROAD AHEAD" (OW-121) SIGNS WHENEVER A NIGHT LANE CLOSURE IS NECESSARY.

7. ADEQUATE AREA ILLUMINATION OF EACH FLAGGER STATION SHALL BE PROVIDED AT NIGHT BY USING 150 WATT MINIMUM HIGH PRESSURE SODIUM LUMINAIRES OR 250 WATT MINIMUM MERCURY LUMINAIRES. LUMINAIRES SHALL BE LOCATED ADJACENT TO ONE FLAGGER STATION FOR EACH DIRECTION OF TRAFFIC.

DISTANCE	A	B	C
URBAN	200	350	100
RURAL	500	650	200

ALL WORK AND TRAFFIC CONTROL DEVICES SHALL BE IN ACCORDANCE WITH 614 AND OTHER APPLICABLE PORTIONS OF THE C & M SPECIFICATIONS AS WELL AS IN ACCORDANCE WITH PART 7 OF OMUTCD. PAYMENT FOR ALL LABOR, EQUIPMENT AND MATERIALS TO PROVIDE THIS METHOD OF TRAFFIC CONTROL SHALL BE INCLUDED IN THE LUMP SUM BID FOR 614 MAINTAINING TRAFFIC, UNLESS SEPARATELY ITEMIZED IN THE PLAN.

REVISED BY:	DATE:	
2097 11FED		DATE 04/05/89
FLAGGER CLOSING 1 LANE OF A 2 LANE HIGHWAY FOR PAVING OPERATIONS WITH CONES		
PLAN INSERT SHEET		

WCC

TRAFFIC CONTROL NOTES

GENERAL

UTILITIES

THE CONTRACTOR SHALL OBSERVE THE REGULATIONS OF UTILITIES IN THE AREA OF HIS EQUIPMENT AND EXERCISE DUE CAUTION IN CONSTRUCTION WORK NEAR THEIR FACILITIES.

PRIOR TO BEGINNING CONSTRUCTION, THE CONTRACTOR SHALL NOTIFY ALL UTILITIES HAVING INSTALLATIONS IN THE AREA TO SECURE AND AFFIRM DATA ON UTILITY LOCATIONS. THESE AGENCIES AND UTILITIES SHALL BE NOTIFIED AT LEAST 48 HOURS PRIOR TO ANY EXCAVATION IN AREAS CONTAINING THEIR INSTALLATIONS.

REMOVAL OF SIGNS FOR STORAGE

ALL SIGNS REMOVED FOR STORAGE SHALL BE STORED ON THE PROJECT FOR SALVAGE BY THE CITY OF CLEVELAND FORCES.

PAINTING OF TRAFFIC CONTROL EQUIPMENT

ALL TRAFFIC CONTROL EQUIPMENT SHALL BE FURNISHED AS SPECIFIED IN THE 1993 OHIO DEPARTMENT OF TRANSPORTATION, CONSTRUCTION AND MATERIALS SPECIFICATIONS. IN ADDITION, MAST ARM TYPE SIGNAL OR SIGN SUPPORT POLES AND MAST ARMS, PEDESTALS, AND CONTROLLER CABINETS SHALL BE PAINTED, PRIOR TO DELIVERY, WITH AN APPROPRIATE PAINT SYSTEM, IN ACCORDANCE WITH THE MANUFACTURER'S SPECIFICATIONS, IN A BROWN COLOR, APPROVED IN WRITING BY THE ENGINEER AND THE CITY OF CLEVELAND TRAFFIC ENGINEERING DEPARTMENT.

PAYMENT SHALL BE INCLUDED UNDER THE FOLLOWING ITEMS:

ITEMS TO BE PAINTED	QUANTITY
ITEM 630 – OVERHEAD SIGN SUPPORT, TYPE TC-16.20, AS PER PLAN	1
ITEM 632 – SIGNAL SUPPORT, TYPE TC-81.20, AS PER PLAN	2
ITEM 632 – COMBINATION SIGNAL SUPPORT, TYPE TC-81.20, AS PER PLAN	8
ITEM 632 – STRAIN POLE, TYPE TC-81.10, AS PER PLAN	1
ITEM 632 – PEDESTAL, TRANSFORMER BASE, AS PER PLAN	7
ITEM 633 – CONTROLLER, ACTUATED, 8 PHASE, SOLID STATE DIGITAL MICROPROCESSOR, AS PER PLAN	2

FLEXIBLE PAVEMENT REPAIR AT PROPOSED LOOP DETECTORS

IN AREAS WHERE THE EXISTING PAVEMENT HAS AN ASPHALT (FLEXIBLE) WEARING SURFACE AND PROPOSED LOOP DETECTORS ARE TO BE INSTALLED, IF THE EXISTING ASPHALT PAVEMENT SURFACE IS DETERMINED TO BE UNSUITABLE BY THE ENGINEER, THE PAVEMENT SHALL BE REPAIRED IN ACCORDANCE WITH THE NOTES AND DETAILS AS DESCRIBED UNDER "TYPICAL FLEXIBLE PAVEMENT REPAIR AT PROPOSED LOOP DETECTORS". SEE SHEET 72.

EXISTING WALK

IN AREAS WHERE THE EXISTING WALK WILL BE DISTURBED, THE WALK SHALL BE REMOVED IN TOTAL SLAB SECTIONS AS DIRECTED BY THE ENGINEER. THIS WORK SHALL INCLUDE THE COST OF ANY SAW CUTS AND PRE-MOLDED JOINT FILLER REQUIRED BY THE ENGINEER TO COMPLETE THIS WORK. WHERE CONCRETE WALK IS TO BE REMOVED, IT SHALL BE SAW CUT PER 202.05 (C), REMOVED AND DISPODED OF, AND NEW CONCRETE WALK SHALL BE CONSTRUCTED IN ACCORDANCE WITH ITEM 608 – 4" CONCRETE WALK.

CONDUIT RUNS AS SHOWN IN THESE PLANS ARE SUBJECT TO ADJUSTMENT TO MINIMIZE CONFLICTS WITH EXISTING CATCH BASINS, MANHOLES, UTILITY POLES, HYDRANTS OR OTHER SUCH APPURTENANCES. PAYMENT FOR THIS WORK SHALL BE AT THE CONTRACT UNIT BID FOR THE ACTUALLY COMPLETED AND ACCEPTED QUANTITIES OF ITEM 202 – WALK REMOVED (SQ. FT.), AND ITEM 608 – 4" CONCRETE WALK (SQ. FT.).

THE FOLLOWING ESTIMATED QUANTITIES ARE CARRIED TO THE GENERAL SUMMARY FOR USE AS DIRECTED BY THE ENGINEER:

ITEM 202 – WALK REMOVED	4400 SQ. FT.
ITEM 608 – 4" CONCRETE WALK	4400 SQ. FT.

MAINTENANCE OF TRAFFIC STANDARD CONSTRUCTION SPECIFICATIONS

REFERENCES TO SECTION 621, OR SUPPLEMENTAL SPECIFICATIONS 806, 847, 906, OR 947 ON THE STANDARD CONSTRUCTION DRAWINGS OR ELSEWHERE IN THESE PLANS, SHALL BE CONSIDERED TO READ AS REFERENCES TO THE APPROPRIATE PORTIONS OF SECTIONS 641, 642, 643, 644, 645, AND 740.

TRAFFIC CONTROL STANDARD CONSTRUCTION DRAWINGS

REFERENCES TO SUPPLEMENTAL SPECIFICATIONS 857, 858, 861, 957, 958 AND 961 ON THE TRAFFIC CONTROL STANDARD CONSTRUCTION DRAWINGS IN THESE PLANS SHALL BE CONSIDERED TO READ AS RESPECTIVE REFERENCES TO ITEMS 630, 631, 633, 730, 731 AND 733.

ITEM 625 – PULL BOX, MISC.: POLYMER CONCRETE

THE MATERIAL FOR THE BOXES AND COVERS SHALL BE SAND AND GRAVEL BOUND TOGETHER WITH A FIBER REINFORCED POLYMER RESIN WITH A BOX WALL THICKNESS OF AT LEAST 1/2 INCH. OPENINGS SHALL BE RECTANGULAR. BOX DEPTH MAY BE ACHIEVED BY EXTENSIONS OR STACKING. COVERS SHALL BE SLIP RESISTANT AND SHALL BARE THE CAST WORD "TRAFFIC." COVERS SHALL FIT TIGHTLY AND BE SECURED BY STEEL HARDWARE CONSISTING OF A STANDARD 3/8" – 16 N C HEX BOLTS WITH WASHERS. BOX SIZE AND STRENGTH SHALL CONFORM TO THE FOLLOWING TABLE:

NOMINAL SIZE, INCHES	CLEAR OPENING, SQUARE INCHES (APPROXIMATE)	DEPTH, INCHES	TEST LOAD, POUNDS*
17 X 30	510	18	15,000

* THE PULL BOX WITH ANY EXTENSIONS SHALL SUPPORT THE TEST LOAD DISTRIBUTION UNIFORMLY AT THE CENTER OVER A 10 BY 10 INCH AREA.

THE ITEMS SUPPLIED SHALL BE IN CONFORMANCE WITH THE ABOVE REFERENCED SPECIFICATION AND SHALL BE SUPPLEMENTED WITH THE LATEST EDITION OF THE STATE OF OHIO DEPARTMENT OF TRANSPORTATION, CONSTRUCTION AND MATERIAL SPECIFICATIONS. PAYMENT FOR ACCEPTED MATERIALS WILL BE MADE AT THE UNIT BID PRICE OF EACH ITEM.

ITEM 630 – SIGN, FLAT SHEET, AS PER PLAN

SIGNS SUPPLIED UNDER THIS ITEM SHALL MEET THE REQUIREMENTS OF 630, EXCEPT THAT REFLECTIVE SHEETING WILL NOT BE USED. THE BACKGROUND COLOR OF THE SIGN SHALL BE PAINT APPLIED TO THE FLAT SHEET MATERIAL.

ITEM 630 – SIGNING, MISC.: STREET NAME SIGN, AS PER PLAN

SIGNS SUPPLIED UNDER THIS ITEM SHALL MEET THE REQUIREMENTS OF ITEM 630. IN ADDITION, STREET NAME SIGNS SHALL BE SINGLE FACED, 20 INCH HIGH BLANKS WITH 12-1/2 INCH HIGHWAY GOTHIC LETTERING WITH TYPE G SHEETING. THE COLOR SHALL BE WHITE LETTERS ON A BLUE BACKGROUND WITH A 1/4 INCH PIN STRIPE ALL AROUND, 1/2 INCH FROM THE SIGN EDGE. THE SIGNS ON SIGNAL SUPPORTS SS-3 AT DETROIT/W. 25TH AND AT THE W 9TH/HURON/SUPERIOR INTERSECTION SHALL HAVE TWO LINES OF 7 INCH LETTERING. ALL OTHER SIGN SPECIFICATIONS SHALL BE THE SAME.

STREET NAME SIGNS SHALL BE RIGID MOUNTED ON THE MAST ARMS BETWEEN THE POLE AND THE FIRST SIGNAL AT LOCATIONS AS INDICATED ON THE PLANS, EXCEPT AT SIGNAL SUPPORT SS-2 (SHEET 69), WHERE THE SIGN SHALL BE MOUNTED ON THE SIGNAL POLE AT THE MAST ARM ATTACHMENT HEIGHT.

PAYMENT FOR ITEM 630 – SIGNING, MISC.: STREET NAME SIGN, AS PER PLAN SHALL BE MADE AT THE UNIT BID PRICE FOR EACH SIGN INSTALLED.

ITEM 630 – SIGN, DOUBLE FACED STREET NAME, AS PER PLAN

SIGNS SUPPLIED UNDER THIS ITEM SHALL MEET THE REQUIREMENTS OF 630. EXCEPT THAT THE BACKGROUND COLOR OF THE SIGN SHALL BE BLUE. THE LEGEND SHALL BE 7 INCH HIGH LETTERS, HIGHWAY GOTHIC C WITH SIGN FIX MOUNTING, ON A 10 INCH HIGH EXTRUDED PLATE WITH STIFFENED EDGES.

PAYMENT FOR ITEM 630 – SIGN, DOUBLE FACED STREET NAME, AS PER PLAN SHALL BE MADE AT THE UNIT BID PRICE FOR EACH SIGN INSTALLED.

ITEM 630 – SIGN HANGER ASSEMBLY, MAST ARM, AS PER PLAN

ATTACHMENT OF MISCELLANEOUS FLAT SHEET SIGNS TO TRAFFIC SIGNAL MAST ARMS SHALL BE DONE USING THE SIGN BRACKET DETAIL ON STANDARD CONSTRUCTION DRAWING TC-16.20, OR OTHER MOUNTING METHODS APPROVED BY THE ENGINEER; MEASURED AS THE NUMBER OF HANGER ASSEMBLIES. EACH HANGER ASSEMBLY SHALL CONSIST OF ALL HARDWARE NECESSARY TO ATTACH ONE INDIVIDUAL SIGN.

PAYMENT FOR ITEM 630 – SIGN HANGER ASSEMBLY, MAST ARM, AS PER PLAN SHALL BE MADE AT THE CONTRACT UNIT PRICE BID PER EACH. PAYMENT SHALL BE FULL COMPENSATION FOR ALL LABOR, MATERIALS, TOOLS, EQUIPMENT, AND OTHER INCIDENTALS NECESSARY TO ATTACH ONE SIGN.

ITEM 630 – SIGN SUPPORT ASSEMBLY, POLE MOUNTED, AS PER PLAN "A"

THIS ITEM IS TO BE USED FOR WING MOUNTING DOUBLE FACED STREET NAME SIGNS TO STRAIN POLES, MAST ARM POLES, OR WOOD POLES.

THE MOUNTING BRACKET SHALL BE ONE OF THE FOLLOWING, OR AN APPROVED EQUAL:

#8 WING BRACKET
DECKER SUPPLY CO., INC.
P.O. BOX 8008
MADISON, WISCONSIN 53708
(800-274-5495)

GX-3 CANTILEVERED WING BRACKET
SUPERIOR PRECISION DESIGN, INC.
3 SPIELMAN ROAD
FAIRFIELD, NEW JERSEY 07004
(800-377-4160)

VS-1C CANTILEVER BRACKET
VULCAN SIGNS
P.O. BOX 850
FOLEY, ALABAMA 36536
(800-633-6845)

THE BRACKET SHALL BE SUITABLE FOR MOUNTING EXTRUDED DOUBLE FACED STREET NAME SIGNS WITH THICKENED EDGES.

PAYMENT FOR ITEM 630 – SIGN SUPPORT ASSEMBLY, POLE MOUNTED, AS PER PLAN SHALL BE MADE AT THE CONTRACT UNIT PRICE BID PER EACH. PAYMENT SHALL BE FULL COMPENSATION FOR ALL LABOR, MATERIALS, TOOLS, EQUIPMENT, AND OTHER INCIDENTALS NECESSARY TO ATTACH ONE SIGN.

ITEM 630 – SIGN ATTACHMENT ASSEMBLY, AS PER PLAN

SIGNS ATTACHED TO THE TRUSS MEMBERS ON THE VETERANS MEMORIAL BRIDGE SHALL HAVE SPECIAL ATTACHMENT ASSEMBLIES AS DETAILED ON SHEET 231A/270 SEE SHEET 57 FOR LOCATION OF SIGNS.

ITEM 630 – TRUSS MOUNTED OVERHEAD SIGN SUPPORT, MISC.: AS PER PLAN

SUPPORTS SUPPLIED UNDER THIS ITEM ARE DETAILED ON SHEET 231A/270 THEY SHALL SUPPORT THE SIGNS OVER THE OUTSIDE LANES ON THE VETERANS MEMORIAL BRIDGE AT STA. 111+65 AND STA. 116+59 AS SHOWN ON SHEET 57. THE SUPPORTS SHALL BE PAINTED THE SAME COLOR AS THE STRUCTURAL STEEL.

ITEM 630 – SPAN WIRE SIGN SUPPORT, TYPE TC-17.10 DESIGN 7, AS PER PLAN

SUPPORTS SUPPLIED UNDER THIS ITEM SHALL BE COMBINATION STRAIN POLES, TYPE TC-81.10, DESIGN 7, SEE SHEET 222/270 IN THE STRUCTURE PLANS FOR FOUNDATION DETAILS. THE POLES SHALL BE PAINTED THE SAME COLOR AS THE STRUCTURAL STEEL.

TRAFFIC CONTROL NOTES

ITEM 632 – STRAIN POLE, TYPE TC-81.10, DESIGN 1, AS PER PLAN

STRAIN POLES SUPPLIED UNDER THIS ITEM SHALL MEET THE REQUIREMENTS OF ITEM 632 AND SHALL HAVE A MODIFIED HEIGHT OF 13 FEET. SEE DETAIL SS-4 ON SHEET 69 FOR DETAILS. POLES SHALL BE PAINTED BROWN ACCORDING TO CITY OF CLEVELAND SPECIFICATIONS.

ITEM 632 – REMOVAL OF TRAFFIC SIGNAL INSTALLATION

TRAFFIC SIGNAL INSTALLATIONS, INCLUDING SIGNAL HEADS, CABLE, MESSENGER WIRE, STRAIN POLES, CABINET, CONTROLLERS, ETC., SHALL BE REMOVED IN ACCORDANCE WITH 632.25 AND AS INDICATED ON THE PLANS. REMOVED ITEMS SHALL BE STORED ON THE PROJECT FOR SALVAGE BY THE CITY OF CLEVELAND.

IN THE EVENT THE ITEMS STORED ON THE PROJECT FOR SALVAGE BY THE LOCAL AGENCY ARE NOT REMOVED; THE CONTRACTOR SHALL, WHEN DIRECTED BY THE ENGINEER IN WRITING, REMOVE AND DISPOSE OF THE ITEMS AT NO ADDITIONAL COST TO THE PROJECT.

ITEM 632 – POWER SUPPLY FOR TRAFFIC SIGNALS

ELECTRIC POWER SHALL BE OBTAINED FOR THE W. 25TH/DETROIT INTERSECTION FROM THE CLEVELAND ELECTRIC ILLUMINATING COMPANY AND FOR THE W. 9TH/HURON/SUPERIOR INTERSECTION FROM CLEVELAND PUBLIC POWER AT THE LOCATIONS INDICATED ON THE PLANS. POWER SUPPLIES SHALL BE 120 VOLTS AC.

ITEM 632 – INTERCONNECT CABLE, 6 PAIR, NO. 19 AWG, SOLID, REA (PE-39)

THE FOLLOWING CONTINGENCY QUANTITY FOR ITEM 632 – INTERCONNECT CABLE, 6 PAIR, NO. 19 AWG HAS BEEN CARRIED TO THE GENERAL SUMMARY FOR USE, AS APPROVED BY THE ENGINEER TO WIRE THE PROPOSED CONTROLLER AT WEST 9TH ST./SUPERIOR AVE. TO THE EXISTING INTERCONNECT CABLE. NO SPLICES IN THE INTERCONNECT CABLE SHALL BE ALLOWED, EXCEPT AT THE CONTROLLER TERMINAL LOCATIONS.

ITEM 632 – INTERCONNECT CABLE, 6 PAIR,
NO. 19 AWG, SOLID, REA (PE-39) _____ 600 LF

ITEM 632 – VEHICULAR SIGNAL HEAD (BY TYPE) AS PER PLAN

SECTION 732.01 OF THE SPECIFICATIONS IS MODIFIED FOR THIS PROJECT AS FOLLOWS:

A) SIGNAL HEADS AND VISORS SHALL BE CONSTRUCTED OF POLYCARBONATE PLASTIC AND MEET I.T.E. SPECIFICATIONS.
B) PLASTIC LENSES SHALL BE USED.
C) PIPE, SPACERS, AND FITTINGS CONSTRUCTED OF POLYCARBONATE PLASTIC MAY BE USED IN LIEU OF GALVANIZED STEEL OR ALUMINUM.
D) PROPER EXTERIOR COLORS SHALL BE OBTAINED BY USE OF COLORED PLASTIC MATERIAL RATHER THAN PAINTING.
E) SIGNALS SHALL BE ATTACHED TO MAST ARMS USING RIGID MOUNTING FIXTURES.
F) SIGNALS SHALL BE LOCATED ON THE MAST ARMS SO THAT VERTICALLY THE CENTERLINE OF THE RED LENS ALIGNS WITH THE CENTERLINE OF THE MAST ARM.

ITEM 632 – PEDESTRIAN SIGNAL HEAD, TYPE D2, AS PER PLAN

SECTION 732.05 OF THE SPECIFICATIONS IS MODIFIED FOR THIS PROJECT AS FOLLOWS:

A) PEDESTRIAN SIGNAL HOUSINGS MAY BE CONSTRUCTED OF POLYCARBONATE PLASTIC AND SHALL MEET I.T.E. SPECIFICATIONS.
B) VISORS SHALL BE CONSTRUCTED OF POLYCARBONATE PLASTICS AND MEET I.T.E. SPECIFICATIONS.
C) PLASTIC LENSES SHALL BE USED.
D) PIPE, SPACERS, AND FITTINGS CONSTRUCTED OF POLYCARBONATE PLASTIC MAY BE USED IN LIEU OF GALVANIZED STEEL OR ALUMINUM.
E) SIGNALS SHALL BE ATTACHED TO POLES AS SHOWN ON TC-85.10, EXCEPT THAT THE USE OF THE OPTIONAL TWO-PIECE HINGED BRACKET ("CLAM SHELL") WILL NOT BE PERMITTED.
F) PEDESTRIAN SIGNALS SHALL HAVE DISPLAYS USING THE INTERNATIONAL SYMBOLS.
G) POLE PLATE AND STAINLESS STEEL BANDING SHALL BE USED.

ITEM 632 – LOOP DETECTOR UNIT (BY TYPE), AS PER PLAN

IN ADDITION TO THE REQUIREMENTS OF 632 AND 732.07 OR 732.08, LOOP DETECTOR UNITS SHALL HAVE THE FOLLOWING REQUIREMENTS OR FEATURES:

THE UNIT SHALL HAVE A TIMING FUNCTION AND ACCU COUNT OUTPUTS, OR AN APPROVED EQUAL.

THE OUTPUT DEVICE SHALL BE A RELAY AND ALL CONTACTS SHALL BE INCLUDED IN THE WIRING HARNESS.

THE UNIT SHALL BE SELF TUNING.

THE UNIT'S ELECTRICAL CONNECTION PLUGS OR WIRING HARNESS SHALL ALLOW READY REPLACEMENT WITH A SINGLE CHANNEL AMPLIFIER AS DESCRIBED IN THE FINAL PARAGRAPH OF 732.07. UNITS SHALL HAVE A DUAL OUTPUT FOR SYSTEM PURPOSES AND PULSE/PRESENCE PHASE CALLING PURPOSES.

ITEM 632 – PHONE DROP

THIS ITEM OF WORK SHALL CONSIST OF SUPPLYING A PHONE DROP TO THE MASTER CONTROLLER. IT SHALL IN CLUDE CONDUIT RISER, TRENCH, CONDUIT, SHIELDED TWO (2) CONDUCTOR CABLE, LIGHTING ARRESTOR AND CABINET TERMINALS TO COMPLETELY WIRE TO THE TELEPHONE MODEM SPECIFIED IN THE PLANS. IT SHALL BE THE RESPONSIBILITY OF THE CONTRACTOR TO MAKE ARRANGEMENTS WITH THE LOCAL TELEPHONE COMPANY TO HAVE A TELEPHONE SERVICE DROP INSTALLED AT THE LOCATION SHOWN IN THE PLANS.

PAYMENT FOR ITEM SPECIAL: PHONE DROP WILL BE AT THE CONTRACT UNIT PRICE FOR EACH PHONE DROP IN PLACE, COMPLETELY INSTALLED IN THE CONTROLLER SHOWN IN THE PLANS, WIRED, TESTED AND ACCEPTED.

ITEM 633 – CONTROLLER WORK PAD

REFERENCES TO ITEM 608 4" CONCRETE WALK FOR CONTROLLER WORK PADS ON THE STANDARD CONSTRUCTION DRAWINGS, IN THESE PLANS, SHALL BE CONSIDERED TO READ AS REFERENCES TO ITEM 633 CONTROLLER WORK PAD.

ITEM 633 – CONTROLLER, MASTER, TRAFFIC RESPONSIVE, AS PER PLAN

1. THIS ITEM OF WORK SHALL CONSIST OF FURNISHING AND INSTALLING A SOLID STATE DIGITAL MICROPROCESSOR TYPE TRAFFIC RESPONSIVE MASTER CONTROLLER WITH MENU DRIVEN PROMPTS, INTERNAL TBC, TELEMETRY UNIT, IN THE LOCAL CONTROLLER CABINET, AND ALL OTHER ACCESSORIES THAT ARE NECESSARY TO MAKE THE MASTER COMPLETELY FUNCTIONAL AND OPERATIONAL AS SHOWN IN THE PLANS. THIS ITEM SHALL ALSO INCLUDE THE EXTRA CABINET SPACE NECESSARY TO BE LOCATED IN THE LOCAL CONTROLLER CABINETS WHERE INDICATED IN THE PLANS.

2. A TELEPHONE MODEM SHALL BE COMPLETELY WIRED TO REPORT CABINET FAILURES, DETECTOR FAILURES AND TRAFFIC COUNTS. THE CONTROLLER SHALL BE COMPLETELY COMPATIBLE WITH THE CITY OF CLEVELAND CLOSED LOOP SYSTEM SOFTWARE "TRANSYT'S SMARTWAYS."

3. PAYMENT FOR ITEM 633 CONTROLLER, MASTER, SOLID STATE DIGITAL MICROPROCESSOR, TRAFFIC RESPONSIVE, AS PER PLAN WILL BE MADE AT THE CONTRACT PRICE FOR EACH CONTROLLER IN PLACE, COMPLETELY INSTALLED IN THE LOCAL CONTROLLER SHOWN IN THE PLANS, WIRED TESTED, AND ACCEPTED.

ITEM 633 – CONTROLLER, ACTUATED (8) PHASE, SOLID STATE DIGITAL MICROPROCESSOR, AS PER PLAN

1. THE CABINET SHALL BE BASE MOUNTED.

2. THE CABINET SHALL BE DELIVERED PREWIRED AND SHALL INCLUDE FOUR (4) ADDITIONAL LOOP DETECTOR WIRING HARNESSES FOR FUTURE USE.

3. OVERLAP PROGRAMMING SHALL BE BY USE OF A INTERCHANGEABLE PLUG-IN PRINTED CIRCUIT BOARD ASSEMBLY AS DESCRIBED IN PART 14 OF TS-1, 1983.

4. IN ADDITION TO NEMA REQUIREMENTS, THE CONFLICT MONITOR SHALL ALSO HAVE EXTENDED MONITORING IN ACCORDANCE WITH 733.04, PART 3B. THE MONITOR SHALL ALSO HAVE AUTO LOGGING AND CENTRAL OFFICE COMPUTER DATA TRANSFER CAPABILITIES.

5. THE FOLLOWING SWITCHES SHALL BE ACCESSIBLE VIA THE POLICE DOOR PANEL:
   A. SIGNAL SHUTDOWN
   B. FLASH CONTROL
   C. AUTOMATIC/MANUAL TRANSFER

6. THE FOLLOWING SWITCHES SHALL BE MOUNTED ON THE SWITCH PANEL IN THE CABINET.
   A. RUN/STOP TIME
   B. CONTROLLER SHUTDOWN
   C. DETECTOR TEST

7. THE CONTROLLER SHALL BE COMPLETELY COMPATIBLE WITH THE EXISTING CITY OF CLEVELAND TRANSYT CLOSED LOOP SYSTEM AND SHALL INCLUDE ALL COMMUNICATION AND INTERFACE EQUIPMENT THAT WILL ENABLE TRANSMISSION AND RECEPTION OF ALL REQUIRED PATTERN AND COMMAND DATA TO AND FROM THE CENTRAL OFFICE COMPUTER, THE MASTER CONTROLLER AND THE LOCAL INTERSECTION CONTROLLERS.

8. THE CABINET SHALL BE PAINTED BROWN ACCORDING TO CITY OF CLEVELAND SPECIFICATIONS.

PAYMENT FOR "ITEM 633 CONTROLLER, ACTUATED (8) PHASE, SOLID STATE DIGITAL MICROPROCESSOR, AS PER PLAN" WILL BE AT THE CONTRACT BID PRICE PER EACH COMPLETE AND IN PLACE INCLUDING ALL CONNECTIONS TESTED AND ACCEPTED.

TRAFFIC CONTROL NOTES

FHWA REGION	STATE	PROJECT	
5	OHIO		

46A
412

CUYAHOGA COUNTY
CUY-6-14.99

MAINTENANCE OF TRAFFIC SIGNAL INSTALLATIONS

THE CONTRACTOR SHALL BE RESPONSIBLE FOR MAINTAINING TRAFFIC SIGNAL INSTALLATIONS WITHIN THE PROJECT UNDER THE FOLLOWING CONDITIONS:

A) EXISTING SIGNAL INSTALLATIONS WHICH THE PLANS REQUIRE THE CONTRACTOR TO ADJUST, MODIFY, ADD ONTO, OR REMOVE, OR WHICH THE CONTRACTOR ACTUALLY ADJUSTS, MODIFIES OR OTHERWISE DISTURBS. THE CONTRACTOR SHALL BE RESPONSIBLE FOR THE ENTIRE INSTALLATION (AT AN INTERSECTION) FOR THE TIME HIS OPERATIONS FIRST DISTURB THE INSTALLATION UNTIL THE INSTALLATION HAS BEEN SUBSEQUENTLY REMOVED, MODIFIED, OR RESTORED TO ITS ORIGINAL CONDITION, AND THE WORK HAS BEEN ACCEPTED.

B) NEW OR REUSED SIGNAL INSTALLATIONS OR DEVICES, INSTALLED BY THE CONTRACTOR. THE CONTRACTOR SHALL BE RESPONSIBLE FOR MAINTENANCE OF THESE FROM THE TIME OF INSTALLATION UNTIL THE WORK IS ACCEPTED.
THE CONTRACTOR SHALL CORRECT AS QUICKLY AS POSSIBLE ALL OUTAGES OR MALFUNCTIONS. HE SHALL PROVIDE THE MUNICIPALITY AND THE ENGINEER SUCH ADDRESSES AND PHONE NUMBERS WHERE HIS MAINTENANCE FORCES CAN BE CONTACTED. THE CONTRACTOR SHALL PROVIDE ONE OR MORE PERSONS TO RECEIVE ALL CALLS AND DISPATCH THE NECESSARY MAINTENANCE FORCES TO CORRECT OUTAGES OR MALFUNCTIONS. SUCH AS PERSON OR PERSONS MAY BE USED TO PERFORM OTHER DUTIES AS LONG AS PROMPT ATTENTION IS GIVEN TO THESE CALLS, AND A PERSON IS READILY AVAILABLE CONTINUOUSLY 24 HOURS PER DAY, SEVEN DAYS PER WEEK. ALL LAMP OUTAGES, CABLE OUTAGES, ELECTRICAL FAILURES, EQUIPMENT MALFUNCTIONS AND MISALIGNED SIGNAL HEADS SHALL BE CORRECTED TO THE SATISFACTION OF THE ENGINEER, WITH THE SIGNAL BACK IN SERVICE, WITHIN FOUR (4) HOURS AFTER THE CONTRACTOR HAS BEEN NOTIFIED OF THE OUTAGE OR MALFUNCTION.

IN THE EVENT NEW SIGNALS ARE DAMAGED PRIOR TO ACCEPTANCE, ALL DAMAGED EQUIPMENT, EXCEPT POLES AND CONTROL EQUIPMENT, SHALL BE REPLACED BY THE CONTRACTOR TO THE SATISFACTION OF THE ENGINEER WITH THE SIGNAL BACK IN SERVICE WITHIN EIGHT (8) HOURS AFTER THE CONTRACTOR HAS BEEN NOTIFIED OF THE DAMAGE.

IF POLES AND/OR CONTROL EQUIPMENT ARE DAMAGED AND MUST BE REPLACED, THE CONTRACTOR SHALL MAKE TEMPORARY REPAIRS AS NECESSARY TO BRING THE SIGNAL BACK INTO FULL OPERATION WITHIN THE ALLOWED EIGTH (8) HOUR PERIOD. AND SHALL MAKE PERMANENT REPAIRS OR REPLACEMENTS AS SOON THEREAFTER AS POSSIBLE.

NONE OF THE ABOVE SHALL BE CONSTRUED AS COLLECTIVE OR CONSECUTIVE OUTAGE TIME PERIODS AT ANY ONE LOCATION. THAT IS, WHERE MORE THAN ONE OUTAGE OR MALFUNCTION OCCURS CONCURRENTLY AT ANY ONE LOCATION, THEN THE ALLOTTED TIME LIMIT SHALL BE FOR THE WORST SINGLE OUTAGE OR MALFUNCTION.

WHERE OUTAGES OR MALFUNCTIONS ARE THE DIRECT RESULT OF A VEHICLE ACCIDENT, THE RESPONSE OF THE CONTRACTOR SHALL BE AS OUTLINED ABOVE. THE CONTRACTOR SHALL BE RESPONSIBLE FOR COLLECTION OF ANY COMPENSATION FOR THIS WORK FROM THOSE PARTIES RESPONSIBLE FOR THE DAMAGE.

WHERE THE CONTRACTOR HAS FAILED TO OR CANNOT RESPOND TO AN OUTAGE OR SIGNAL EQUIPMENT MALFUNCTION AT THOSE LOCATIONS WITHIN HIS RESPONSIBILITY, THE ENGINEER MAY INVOKE THE PROVISIONS OF SECTION 105.15, AND ANY SUBSEQUENT BILLINGS TO THE STATE OR MUNICIPALITY FOR POLICE SERVICES AND/OR MAINTENANCE SERVICES BY MUNICIPAL FORCES OR OUTSIDE CONTRACTORS HIRED BY THE STATE OR MUNICIPALITY, SHALL BE DEDUCTED FROM MONIES DUE OR TO BECOME DUE TO THE CONTRACTOR IN ACCORDANCE WITH THE PROVISIONS OF SECTION 105.15.

THE CONTRACTOR SHALL PROVIDE THE MAINTENANCE SERVICE BY ENTERING INTO A COOPERATIVE UNDERSTANDING WITH THE LOCAL MAINTAINING AGENCY. COMPLETE CITY MAINTENANCE AT THE CONTRACTOR'S EXPENSE AS PREVIOUSLY PROVIDED HEREIN.

THE CONTRACTOR SHALL PROVIDE A COPY OF THE AGREEMENT WITH THE MUNICIPALITY IN THIS REGARD.

THE CONTRACTOR SHALL BE RESPONSIBLE FOR ANY DAMAGE TO ANY TRAFFIC SIGNAL COMPONENTS REQUIRED TO BE HANDLED DURING THE RELOCATION OF POLES AND REVISIONS TO THE SIGNAL SYSTEM.

WHEN A TRAFFIC SIGNAL MUST BE TAKEN OUT OF SERVICE BY THE CONTRACTOR, DUE TO CONSTRUCTION PROCEDURES, THIS OUTAGE SHALL NOT EXCEED 3 HOURS AND SHALL NOT INCLUDE THE HOURS OF (6:00 AM TO 9:00 AM, 12:00 NOON TO 1:00 PM, AND/OR 4:00 PM TO 7:00 PM.

THE FOLLOWING INTERSECTIONS, WHEN THE SIGNAL IS OUT OF SERVICE DUE TO CONSTRUCTION PROCEDURES, OR DUE TO AN OUTAGE OR EQUIPMENT MALFUNCTION AS DESCRIBED ABOVE, SHALL BE PROTECTED BY OFF DUTY CITY OF CLEVELAND POLICE OFFICERS, HIRED BY THE CONTRACTOR:

SUPERIOR/HURON/WEST 9TH
DETROIT/WEST 25TH

THE AFOREMENTIONED INTERSECTIONS SHALL NOT BE PROTECTED BY POLICE OFFICERS WHEN STOP SIGN CONTROL IS IN PLACE AT THE INTERSECTIONS AS SHOWN ON THE PLANS.

ANY VEHICULAR TRAFFIC SIGNAL HEAD, EITHER NEW OR EXISTING, WHICH WILL BE OUT OF OPERATION, SHALL BE COVERED IN THE MANNER DESCRIBED IN 632.24.

ALL COSTS RESULTING FROM THE ABOVE REQUIREMENTS SHALL BE CONSIDERED TO BE INCLUDED IN THE LUMP SUM PRICE BID FOR ITEM 614 – MAINTAINING TRAFFIC.

HOWARD NEEDLES TAMMEN & BERGENDOFF
ARCHITECTS ENGINEERS PLANNERS HNTB

MADE BY: DAK DATE: APR '94
DRAWN BY: DAK DATE: APR '94
CHECKED BY: JPR DATE: APR '94
SCALE: NONE
DSIGN01

TRAFFIC CONTROL QUANTITIES

FHWA REGION	STATE	PROJECT	
5	OHIO		

47
412

CUYAHOGA COUNTY
CUY-6-14.99

ITEM 630 – GROUND MOUNTED SIGNS

REF. NO.	ROADWAY	SHEET NO.	STATION	SIDE	CODE	SIZE	SIGN FLAT SHEET	SIGN FLAT SHEET AS PER PLAN	SIGN FLAT SHEET TYPE G	SIGN DOUBLE FACED, STREET NAME, AS PER PLAN	SIGN EXTRU SHEET TYPE G	ONE WAY SUPPORT, NO. 4 POST	NO. 3 POST	NO. 4 POST		SIGN SUPPORT ASSEMBLY, POLE MOUNTED	SIGN SUPPORT ASSEMBLY, POLE MOUNTED, AS PER PLAN "A"	SIGN SUPPORT ASSEMBLY, POLE MOUNTED AS PER PLAN "B"		REMOVAL OF GRD. MTD. SIGN AND STORAGE	REMOVAL OF GRD. MTD. POST SUPPORT AND DISPOSAL	REMOVAL OF GRD. MTD. SIGN AND REERECTION		
							SQ. FT.	SQ. FT.	SQ. FT.	EACH	SQ. FT.	LIN. FT.	LIN. FT.	LIN. FT.		EACH	EACH	EACH		EACH	EACH	EACH		
1	DETROIT AVENUE	54	93+67	LT	SPECIAL	24X30		5								1				1				
4	DETROIT AVENUE	54	94+49	LT	D-14	VARX8				1							1			2				
					D-14	VARX8				1							1							
5	DETROIT AVENUE	54	95+34	LT	R-55(MOD)-12	12X18		1.5								1				1				
6	DETROIT AVENUE	54	96+18	LT	W-5-30	30X30	6.3									1				1				
7	DETROIT AVENUE	54	97+85	LT	R-67(MOD)-12	12X18		1.5								1				1				
8	DETROIT AVENUE	54	97+85	RT	W-5-30	30X30	6.3									1								
9	DETROIT AVENUE	54	97+51	RT	R-1-30	30X30			6.3				13							1	1			
10	DETROIT AVENUE	54	96+14	RT	R-10-24	24X30	5									1				1				
11	DETROIT AVENUE	54	94+18	RT	N-29-24	24X24	4									1				1				
					IM-26-21	21X15	2.2									1								
13	DETROIT AVENUE	54	93+58	RT	R-10-24	24X30	5									1				1				
14	DETROIT AVENUE	54	93+66	RT																2				
15	DETROIT AVENUE	54	93+47	RT	M-1-24	24X24	4									1								
					IM-26-21	21X15	2.2									1								
					M-8-24	24X12	2									1								
17	WEST 25TH STREET	55	21+64	LT	R-41B-36	36X36			9					14.5/14.5										
19	WEST 25TH STREET	55	21+86	LT	R-37R-24	24X30			5				13											
20	WEST 25TH STREET	55	22+14	LT																1				
21	WEST 25TH STREET	55	22+59	LT																1	1			
22	WEST 25TH STREET	55	22+68	LT	R-2-36	36X36			3.9				13							2	1			
23	WEST 25TH STREET	55	22+09	RT																1				
24	WEST 25TH STREET	55	22+71	RT	R-1-30	30X30			6.3				13							1	1			
25	WEST 25TH STREET	55	20+66	RT	R-37R-24	24X30			5				13											
26	WEST 25TH STREET	55	20+54	RT	R-37R-24	24X30			5				13							3	1			
27	WEST 25TH STREET	55	21+56	RT	R-41B-30	30X30			6.3									1		2				
					R-43L-36	36X12			3									1						
					R-43R-36	36X12			3									1						
29	WEST 25TH STREET	55	21+68	RT																1	1			
30	DETROIT AVENUE	55	100+97	LT	R-41B-30	30X30			6.3			14.5												
					R-43L-36	36X12			3															
					R-43R-36	36X12			3															
32	DETROIT AVENUE	55	100+99	LT																2				
33	DETROIT AVENUE	55	101+45	LT	R-41B-30	30X30			6.3			14.5												
					R-43L-36	36X12			3															
					R-43R-36	36X12			3															
34	DETROIT AVENUE	55	101+45	LT	N-29-24	24X24	4											1						
					N-15-24	24X6	1											1						
					W-6-30	30X30	6.3											1						
35	DETROIT AVENUE	55	101+51	LT	W-28-24	24X24	4						13											
36	DETROIT AVENUE	55	102+35	LT	W-47-36	36X36	9											1		1				
37	DETROIT AVENUE	55	104+85	LT	M-45(MOD)	72X102					51							1		1				
	SUB-TOTAL						61.3	8.0	77.4	2	51	29	91	29		12	2	8		28	6	0		

CARRIED TO SHEET 49.

HOWARD NEEDLES TAMMEN & BERGENDOFF
ARCHITECTS ENGINEERS PLANNERS
HNTB

MADE BY: DAK DATE: MAY 94
DRAWN BY: LML DATE: MAY 94
CHECKED BY: JPR DATE: MAY 94
SCALE: NONE
DSPMS002

TRAFFIC CONTROL QUANTITIES

FHWA REGION	STATE	PROJECT	
5	OHIO		

48
412

CUYAHOGA COUNTY
CUY-6-14.99

							ITEM 630 – GROUND MOUNTED SIGNS								631	630			631	630			631	632
REF. NO.	ROADWAY	SHEET NO.	STATION	SIDE	CODE	SIZE	SIGN FLAT SHEET	SIGN FLAT SHEET AS PER PLAN	SIGN FLAT SHEET TYPE G	SIGN EXTRU SHEET TYPE G	SIGN DOUBLE FACED, STREET NAME, AS PER PLAN		NO. 3 POST	NO. 4 POST	REMOVAL MISC.: SIGN FLASHER ASSEMBLY	SIGN SUPPORT ASSEMBLY, POLE MOUNTED, AS PER PLAN "A"	SIGN SUPPORT ASSEMBLY, POLE MOUNTED	SIGN SUPPORT ASSEMBLY, POLE MOUNTED, AS PER PLAN "B"	SIGN SERVICE	REMOVAL OF GRD. MTD. SIGN AND STORAGE	REMOVAL OF GRD. MTD. POST SUPPORT AND DISPOSAL	REMOVAL OF GRD. MTD. SIGN AND REERECTION	SIGN FLASHER ASSEMBLY	PEDESTAL 9 FT.
							SQ. FT.	SQ. FT.	SQ. FT.	SQ. FT.	EACH		LIN. FT.	LIN. FT.	EACH	EACH	EACH	EACH	EACH	EACH	EACH	EACH	EACH	EACH
38	WEST 25TH STREET	55	19+52	RT																4				
39	DETROIT AVENUE	55	100+89	RT	M-1-24	24X24	4											1						
					M-29-21	21X15	2.2											1						
40	WEST 25TH STREET	55	20+40	RT	M-50-66	66X24	11											1		8				
					M-50-66	66X24	11											1						
					M-40-24	24X12	2																	
					M-2-24	24X24	4						8.25											
					M-28-21	21X15	2.2																	
					M-1-24	24X24	4						7.25											
					M-24-21	21X15	2.2																	
43	DETROIT AVENUE	55	99+93	RT	M-1-24	24X24	4											1						
					M-30-21	21X15	2.2											1						
					M-1-24	24X24	4											1						
					M-1-24	24X24	4											1						
					M-24-21	21X15	2.2											1						
					M-24-21	21X15	2.2											1						
44	WEST 25TH STREET	55	19+54	RT	R-56A(MOD)-12	12X18		1.5									1			1				
47	WEST 25TH STREET	55	18+60	RT	R-31E-48(MOD)	48X30	10											1						
48	WEST 25TH STREET	55	18+45	RT																1				
52	DETROIT AVENUE	55	99+67	RT	N-29-24	24X24	4										1			4				
					N-15-24	24X6	1										1							
53	DETROIT AVENUE	55	98+85	RT	R-67A(MOD)-12	12X18		1.5									1			1				
54	DETROIT AVENUE	55	98+81	LT	M-9-24	24X12	2										1			2				
					M-1-24	24X24	4										1							
55	DETROIT AVENUE	55	99+67	LT																2				
57	WEST 25TH STREET	55	20+46	LT	R-31D-48(MOD)	48X30	10											1						
58	WEST 25TH STREET	56	14+47	LT	D-14	VARX8					1					1				2				
					D-14	VARX8					1					1								
59	WEST 25TH STREET	56	14+54	LT	R-1-30	30X30			6.3									1		1				
60	WEST 25TH STREET	56	16+00	LT																1				
61	WEST 25TH STREET	56	16+80	LT	SPECIAL	24X30		5									1			2				
62	WEST 25TH STREET	56	16+11	RT																1				
66	DETROIT AVENUE	57	116+95	LT	W-28-24	24X24	4								1		1		1	1			1	1
69	DETROIT AVENUE	57	111+13	RT	W-28-24	24X24	4								1		1		1	1			1	1
70	DETROIT AVENUE	57	108+81	RT																2				
						SUB-TOTAL	100.2	8	6.3	0	2		15.5	0	2	2	9	13	2	34	0	0	2	2

CARRIED TO SHEET 49.

HOWARD NEEDLES TAMMEN & BERGENDOFF
ARCHITECTS ENGINEERS PLANNERS
HNTB

MADE BY: DAK DATE: MAY 94
DRAWN BY: LML DATE: MAY 94
CHECKED BY: JPR DATE: MAY 94
SCALE: NONE
DSPMS003

TRAFFIC CONTROL QUANTITIES

FHWA REGION	STATE	PROJECT	
5	OHIO		

49
412

CUYAHOGA COUNTY
CUY-6-14.99

							ITEM 630 – GROUND MOUNTED SIGNS								631	630			631	630			631	632
REF. NO.	ROADWAY	SHEET NO.	STATION	SIDE	CODE	SIZE	SIGN FLAT SHEET	SIGN FLAT SHEET AS PER PLAN	SIGN FLAT SHEET TYPE G	SIGN EXTRU SHEET TYPE G	SIGN DOUBLE FACED, STREET NAME, AS PER PLAN	SIGNING, MISC.: STREET NAME SIGN, AS PER PLAN	NO. 3 POST	NO. 4 POST	REMOVAL MISC.: SIGN FLASHER ASSEMBLY	ONE WAY SUPPORT, NO. 4 POST	SIGN SUPPORT ASSEMBLY, POLE MOUNTED AS PER PLAN "A"	SIGN SUPPORT ASSEMBLY, POLE MOUNTED	SIGN SUPPORT ASSEMBLY, POLE MOUNTED AS PER PLAN "B"	SIGN SERVICE	REMOVAL OF GRD. MTD. SIGN AND STORAGE	REMOVAL OF GRD. MTD. POST SUPPORT AND DISPOSAL	REMOVAL OF GRD. MTD. SIGN AND REERECTION	SIGN FLASHER ASSEMBLY	PEDESTAL 9 FT.
							SQ. FT.	SQ. FT.	SQ. FT.	SQ. FT.	EACH	EACH	LIN. FT.		EACH	LIN. FT.	EACH	EACH	EACH	EACH	EACH	EACH	EACH	EACH
71	DETROIT AVENUE	58	125+84	LT																	1				
74	DETROIT AVENUE	58	130+73	LT	N-29-24	24X24	4											1			2				
					M-26-21	21X15	2.2											1							
75	DETROIT AVENUE	58	130+80	LT	R-41B-30	30X30			6.3										1		2				
77	DETROIT AVENUE	58	131+09	LT	R-72E-18	18X18	2.3											1							
					R-72F(L)-18	18X12	1.5											1							
					R-72E-18	18X18	2.3											1							
					R-72F(R)-18	18X12	1.5											1							
78	WEST 9TH STREET	58	0+89	LT	R-41B-30	30X30			6.3										1		2				
79	WEST 9TH STREET	58	0+83	LT																	4				
80	WEST 9TH STREET	58	1+07	LT	R-31M(MOD)-48	48X30	10												1						
81	WEST 9TH STREET	58	1+32	LT														2					2		
82	WEST 9TH STREET	58	2+07	LT	M-45(MOD)	72X102				51									1		2				
83	WEST 9TH STREET	58	1+03	RT														2					2		
84	SUPERIOR AVENUE	58	0+45	LT	R-32R-30	30X30	6.3												1		3				
86	SUPERIOR AVENUE	58	1+14	℄																	1				
87	SUPERIOR AVENUE	58	1+35	LT	R-31B(MOD)-36	36X36	9											1							
					R-56A(MOD)-12	12X18		1.5										1							
88	SUPERIOR AVENUE	58	1+45	LT																	2				
89	SUPERIOR AVENUE	58	2+16	LT	R-56A(MOD)-12	12X18		1.5										1			1				
91	SUPERIOR AVENUE	58	3+28	LT																	1				
92	SUPERIOR AVENUE	58	2+19	RT																	1				
93	SUPERIOR AVENUE	58	1+12	RT	R-37R-24	24X30			5										1						
					STREET NAME	20XVAR.						1							1						
94	SUPERIOR AVENUE	58	1+05	RT																	1	1			
95	HURON ROAD	58	2+23	LT	R-31X-54	54X30	11.3												1		3				
					R-67(MOD)-12	12X18		1.5										1							
					R-62A-12	12X18		1.5										1							
96	HURON ROAD	58	1+83	℄	R-38R-24	24X30			5				13								1	1			
97	HURON ROAD	58	1+08	℄	R-37R-24	24X30			5										1		2				
98	HURON ROAD	58	1+44	RT														1					1		
99	SUPERIOR AVENUE	58	0+39	RT	R-72E-18	18X18	2.3											1							
					R-72F(R)-18	18X12	1.5											1							
					R-72E-18	18X18	2.3											1							
					R-72F(R)-18	18X12	1.5											1							
101	SUPERIOR AVENUE	58	0+42	RT																	1		1		
102	DETROIT AVENUE	58	131+10	RT	R-55-12	12X18		1.5										1			1				
103	DETROIT AVENUE	58	131+12	RT																	2				
104	DETROIT AVENUE	58	131+00	RT																	1	2			
105	DETROIT AVENUE	58	130+88	RT																	2	1			
108	DETROIT AVENUE	58	128+51	RT														2					2		
					SUB-TOTAL		58	7.5	27.6	51	0	1	13	0	0	0	0	23	9	-	36	5	8	0	0
					TOTALS CARRIED FROM SHEET 47		61.3	8	77.4	51	2	–	91	29	–	29	2	12	8	-	28	6	0	–	–
					TOTALS CARRIED FROM SHEET 48		100.2	8	6.3	0	2	–	15.5	0	2	0	2	9	13	2	34	0	0	2	2
					GRAND TOTAL CARRIED TO THE GENERAL SUMMARY		219.5	24	112	102	4	1	120	29	2	29	4	44	30	2	98	11	8	2	2

HOWARD NEEDLES TAMMEN & BERGENDOFF
ARCHITECTS ENGINEERS PLANNERS
HNTB

MADE BY: DAK DATE: MAY 94
DRAWN BY: LML DATE: MAY 94
CHECKED BY: JPR DATE: MAY 94
SCALE: NONE
DSPMSQ04

TRAFFIC CONTROL QUANTITIES

FHWA REGION	STATE	PROJECT	
5	OHIO		

50 / 412

CUYAHOGA COUNTY
CUY-6-14.99

OVERHEAD SIGNS

REF. NO.	ROADWAY	SHEET NO.	STATION	SIDE	CODE	SIZE	625 GROUND ROD		630 SIGN FLAT SHEET TYPE G	SIGN EXTRU SHEET TYPE G	SIGNING MISC.: STREET NAME SIGN, AS PER PLAN		CONCRETE FOR ANCHOR BASE FOUNDATION		TRUSS MOUNTED SIGN SUPPORT AS PER PLAN	OVERHEAD SIGN SIGN SUPPORT TYPE TC-16.20 DESIGN 12 45'-0" ARM AS PER PLAN	SPAN WIRE SIGN SUPPORT TYPE TC-17.10 DESIGN 7 APP	REMOVAL OF OVERHEAD SIGN SUPPORT AND DISPOSAL	REMOVAL OF OVERHEAD MOUNTED SIGN AND STORAGE	REMOVAL OF OVERHEAD MOUNTED SIGN AND REERECTION	SIGN SUPPORT ASSEMBLY POLE MOUNTED AS PER PLAN "B"	SIGN HANGER ASSEMBLY SPAN WIRE	SIGN HANGER ASSEMBLY, MAST ARM, AS PER PLAN	SIGN ATTACHMENT ASSEMBLY AS PER PLAN
							EACH		SQ. FT.	SQ. FT.	EACH		CU. YDS.		EACH	EACH	EACH	EACH	EACH	EACH	EACH	EACH	EACH	EACH
2	DETROIT AVENUE	54	94+07	LT	R-121-24	24X24			4										1			1		
					RP-23-24(MOD)	24X9.5			1.6															
3	DETROIT AVENUE	54	94+08	LT	R-121-24	24X24			4										1			1		
					RP-23-24	24X9.5			1.6															
12	DETROIT AVENUE	54	94+16	LT	R-121-24	24X24			4										1			1		
					RP-23-24	24X9.5			1.6															
18	WEST 25TH STREET	55	21+71	RT	R-121-24	24X24			4														1	
28	WEST 25TH STREET	55	21+47	RT	STREET NAME	20XVAR					1												1	
31	DETROIT AVENUE	55	100+86	LT	R-121-24	24X24			4														1	
					R-23-24	24X24			4														1	
					STREET NAME	20XVAR					1												1	
41	DETROIT AVENUE	55	101+45	LT	R-26A-30	30X36	1		7.5				2.92			1		4	5					
					R-26A-30	30X36			7.5															
					R-30A-30	30X36			7.5															
					R-30A-30	30X36			7.5															
					SPECIAL	30X30			6.3															
42	DETROIT AVENUE	55	100+89	RT	R-121-24	24X24			4														1	
					R-23-24	24X24			4														1	
					STREET NAME	20XVAR					1												1	
45	WEST 25TH STREET	55	19+56	RT															1					
46	WEST 25TH STREET	55	19+70	RT															1					
49	WEST 25TH STREET	55	17+09	RT	R-30A-30	30X36			7.5										3			1		
					R-27A-30	30X36			7.5													1		
					R-27A-30	30X36			7.5													1		
50	DETROIT AVENUE	55	99+93	RT	STREET NAME	20XVAR					1												1	
51	DETROIT AVENUE	55	100+22	RT															1					
56	WEST 25TH STREET	55	20+46	LT	R-25E(L)-24	24X30			5														1	
					R-25E(L)-24	24X30			5														1	
					R-120-24	24X30			5														1	
					STREET NAME	20XVAR					1												1	
64	DETROIT AVENUE	57	111+65	LT/RT																1				
65	DETROIT AVENUE	57	116+59	LT	GG	10'X6.5'				65									2					1
					GG	11'X6.5'				71.5														1
					GG	10'X6.5'				65					1									
67	DETROIT AVENUE	57	116+59	LT/RT																1				
68	DETROIT AVENUE	57	111+65	RT											1					3				
73	DETROIT AVENUE	58	131+17	LT															2					
76	DETROIT AVENUE	58	131+09	LT	R-23-24	24X24			4														1	
					STREET NAME	20XVAR					1												1	
85	SUPERIOR AVENUE	58	0+59	LT	R-121-24	24X24			4														1	
					STREET NAME	20XVAR					1										1			
90	SUPERIOR AVENUE	58	2+68	LT	R-30A(MOD)-30	30X36			7.5										4			1		
					R-30A(MOD)-30	30X36			7.5													1		
					R-28(MOD)-30	30X36			7.5													1		
					R-27A-30	30X36			7.5													1		
100	SUPERIOR AVENUE	58	0+39	RT	R-23-24	24X24			4														1	
					STREET NAME	20XVAR					1												1	
107	DETROIT AVENUE	58	128+51	RT	R-26A-30	30X36			7.5								1							
					R-30A-30	30X36			7.5															
					R-30A-30	30X36			7.5															
					R-29A-30	30X36			7.5															
TOTAL							1		183	202	8		2.9		2	1	1	4	22	5	1	10	18	2

HOWARD NEEDLES TAMMEN & BERGENDOFF
ARCHITECTS ENGINEERS PLANNERS
HNTB

MADE BY: DAK DATE: MAY 94
DRAWN BY: LML DATE: MAY 94
CHECKED BY: JPR DATE: MAY 94
SCALE: NONE

DSPMS005

A-2

PAVEMENT MARKING QUANTITIES

FHWA REGION	STATE	PROJECT	
5	OHIO		

51 / 412

CUYAHOGA COUNTY
CUY-6-14.99

Sheet No.	Location (Ref.)	Station From	Station To	Side	644 Dotted Line, 4 Inch (Yellow or White) L.F.	644 Word on Pavement, 72 Inch EACH	644 Lane Arrow EACH	644 Transverse Line (Yellow or White) L.F.	644 Crosswalk Line L.F.	644 Stop Line L.F.	644 Channelizing Line L.F.	644 Edge Line MILE	642 Island Marking, Type 2 (Yellow) S.F.	642 Curb Marking, Type 2 (Yellow or White) L.F.	642 Center Line, Type 2 MILE	642 Lane Line, Type 2 MILE
54	DETROIT	83+20	98+00	℄											.28	
54		83+20	98+00	RT/LT												.56
54		88+80	93+00	LT				440(Y)								
54		88+89	90+61	LT							172					
54		89+05		LT			1									
54		89+30	92+48	LT				155(Y)								
54		89+45		LT		1										
54		89+75	90+25	LT			2									
54		88+80	93+00	LT								.08(W)				
54		90+61	93+58	LT												.06
54		89+90	92+60	LT											.05	
54		92+68	93+58	℄							90					
54		92+80		LT			1									
54		93+14		LT		1										
54		93+48		LT			1									
54		93+56	93+58	RT/LT						34						
54		93+62	93+89	RT/LT					162							
54		93+58	94+42	LT	84(W)											
54		93+58	94+42	LT	84(Y)											
54		93+70	94+12	RT					79							
54		93+91	94+30	LT					88							
54		93+97	94+13	LT						16						
54		93+88	94+05	RT						18						
54		94+22	94+38	RT/LT					102							
54		94+42	94+44	LT						24						
54		97+14	97+47	RT					64							
54		97+28	97+44	RT						16						
55		98+00	106+00	℄											.15	
55		98+00	99+57	RT/LT												.06
55		99+57	100+89	RT/LT	264(W)											
55		99+57	100+89	RT	132(Y)											
55		100+21	100+89	RT	92(W)											
55		100+52	101+15	RT	74(W)											
55		100+89	102+98	LT							627					
55		101+15	106+00	RT												.09
55		102+98	106+00	LT												.06
55		103+55	106+00	LT												.05
55		104+00	106+00	RT												.04
55		99+57	99+75	RT/LT					100							
55		99+57	99+63	RT						26						
55		100+79	100+85	RT/LT					183							
55		100+89	100+91	RT/LT						48						
55		101+15		LT			4									
55		101+65		LT		3										
55		102+15		LT			5									
55		102+65		LT		1	4									
55		103+12		LT			1									
55		101+43	101+54	LT										28(W)		
55		101+54	101+68	LT				10(W)								
55		101+54	101+68	LT							30					
55		101+23	103+55	LT							238					
55		101+04	101+28	LT					75							
55		101+13	101+34	LT						33						
55	W 25TH	19+49	19+55	RT/LT					174							
55		19+43	19+45	RT						45						
55		17+00	19+45	℄											.05	
55		17+00	19+45	LT												.09
55		17+70	19+45	RT							350					
55		17+00	17+70	RT												.03
55		18+31		RT			3									
55		18+77		RT		3										
55		19+21		RT			3									
55		20+38	20+44	RT/LT					174							
55		20+48	20+50	RT/LT						43						
55		20+48	20+79	LT							61					
55		20+67		RT/LT			3									
55		20+43	20+47	RT									21			
55		20+43	20+81	RT										83(Y)		
55		21+00	21+45	RT					107							
55		21+66	21+86	LT						30						
55		21+78	22+17	LT							60					
55	SUBWAY RAMP	9+39	18+10	RT												.16
55	W 25TH	20+77	21+95	RT/LT	186											
55		21+95	21+32	LT												.01
55		21+81	22+37	LT										170(Y)		
55		22+02	22+40	LT										120(Y)		
55		21+81	21+84	LT									4			
55		22+12	22+14	RT/LT						26						
55		22+12	24+71	RT											.05	
55		24+71	24+73	RT						13						
55		22+12	22+42	LT							30					
55		22+39	22+65	RT					53							
55		22+52	22+65	RT						13						
				SUBTOTAL:	916	9	28	605	1361	385	1658	0.08	25	401	0.58	1.21

HOWARD NEEDLES TAMMEN & BERGENDOFF
ARCHITECTS ENGINEERS PLANNERS
HNTB

MADE BY: DAK DATE: 4/94
DRAWN BY: DJF DATE: 4/94
CHECKED BY: JPR DATE: 4/94
SCALE: N/A
DSPMSQ01

PAVEMENT MARKING QUANTITIES

FHWA REGION	STATE	PROJECT	
5	OHIO		

52/412

CUYAHOGA COUNTY
CUY-6-14.99

LOCATION (REF.)	SHEET NO.	LOCATION INFORMATION STATION FROM	STATION TO	SIDE	642 LANE LINE, TYPE 2 (MILE)	642 CENTER LINE, TYPE 2 (MILE)	642 CURB MARKING, TYPE 2 (YELLOW OR WHITE) (L. F.)	642 ISLAND MARKING, TYPE 2 (YELLOW) (S. F.)	644 EDGE LINE (MILE)	644 CHANNELIZING LINE (L.F.)	644 STOP LINE (L.F.)	644 CROSSWALK LINE (L.F.)	644 TRANSVERSE LINE (YELLOW OR WHITE) (L. F.)	644 LANE ARROW (EACH)	644 WORD ON PAVEMENT, 72 INCH (EACH)	644 DOTTED LINE, 4 INCH (YELLOW OR WHITE) (L.F.)
W 25TH	56	7+73	7+75	LT							42					
	56	7+68	7+73	RT/LT				39					210(Y)			
	56	7+73	9+60	RT/LT												
	56	7+73	17+00	RT/LT		.26										
	56	7+73	17+00	RT/LT	.53					97						
	56	7+73	8+70	LT												
	56	8+70	17+00	LT	.16									1		
	56	7+93		RT												
	56	8+33		RT											1	
	56	8+63		RT										1		
	56	8+63	9+65	RT/LT				39								
	56	9+60	9+79	RT								103				
	56	9+79	10+40	RT												
	56	10+10	10+30	RT							20					
	56	10+40		RT										1		
	56	10+80		RT											1	
	56	11+10		RT										1		
	56	10+30	11+30	LT						100						
	56	11+50	13+02	RT/LT									120(Y)			
	56	13+22	14+48	RT						126						
	56	13+58		RT										1		
	56	13+88		RT											1	
	56	14+28		RT										1		
	56	14+54	14+85	LT								74				
	56	14+60	14+76	LT							16					
	56	14+90	14+95	RT/LT				39					110(Y)			
	56	14+95	17+00	RT/LT												
DETROIT	57	106+00	122+00	℄		.30										
	57	106+00	122+00	RT/LT	.61											
	57	106+00	108+40	LT	.05											
	57	106+00	108+00	RT	.04											
	57	108+00	111+00	RT						600						
	57	108+40	111+00	LT						520						
	57	117+10	120+10	LT						600						
	57	117+10	119+70	RT						520						
	57	119+70	122+00	RT	.04											
	57	120+10	122+00	LT	.04											
	58	122+00	131+35	℄/LT	.18											
	58	122+00	131+35	RT	.35											
	58	122+00	130+90	LT	.34											
	58	127+60	131+35	RT						375						
	58	128+05		℄												
	58	128+55		℄										1		
	58	129+05		℄										1		
	58	129+55		℄										1		
	58	130+05		℄										1		
	58	130+55		℄											1	
	58	131+05		℄												
	58	130+90	131+50	LT												90(W)
	58	130+90	1+34	LT												205(W)
	58	131+33	131+35	RT/LT												
W 9TH	58	0+51	0+81	LT												
	58	0+81	0+91	RT/LT												
	58	0+91	0+97	LT												
	58	0+95	2+50	℄		.03										
	58	0+95	2+45	LT												
	58	0+95	2+50	RT	.03											
	58	1+27		LT												
	58	1+73		LT												
	58	2+27		LT												
SUPERIOR	58	0+11	0+79	LT												
	58	0+24	1+50	RT/LT												
	58	0+40	1+73	RT												
	58	0+68	1+73	RT/LT												
	58	0+87	1+30	LT												
	58	1+00	2+48	LT												
	58	1+10	2+48	LT												
	58	1+20	2+48	LT												
	58	1+46		LT												
	58	1+86		LT												
	58	2+16		LT												
	58	1+67	3+40	RT	.07											
	58	2+48	3+40	LT	.03											
SUBTOTAL:					2.29	0.77	0	117	0	3652	224	882	440	26	9	515

HOWARD NEEDLES TAMMEN & BERGENDOFF
ARCHITECTS ENGINEERS PLANNERS
HNTB

MADE BY: DAK DATE: 4/94
DRAWN BY: DJF DATE: 4/94
CHECKED BY: JPR DATE: 4/94
SCALE: N/A
DSPMSQ01

PAVEMENT MARKING QUANTITIES

644	DOTTED LINE, 4 INCH (YELLOW OR WHITE)	L.F.																		
644	WORD ON PAVEMENT, 72 INCH	EACH								1										
644	LANE ARROW	EACH						3		2	3									
644	TRANSVERSE LINE (YELLOW OR WHITE)	L. F.																		
644	CROSSWALK LINE	L.F.																		
644	STOP LINE	L.F.		53												34				
644	CHANNELIZING LINE	L.F.				93	83													
644	EDGE LINE	MILE																		
642	ISLAND MARKING, TYPE 2 (YELLOW)	S. F.																		
642	CURB MARKING, TYPE 2 (YELLOW OR WHITE)	L. F.																		
642	CENTER LINE, TYPE 2	MILE							.02					.09				.08		
642	LANE LINE, TYPE 2	MILE			.03							.02			.17				.25	
LOCATION INFORMATION	SIDE			LT	RT	LT	LT	LT	℄	LT	LT	LT		℄	RT/LT	RT		℄	RT/LT	
LOCATION INFORMATION	STATION	TO		1+52	2+65	2+23	2+23		2+65			2+65		7+00	7+00	7+00		7+00	7+00	
LOCATION INFORMATION	STATION	FROM		1+15	1+00	1+30	1+40	1+63	1+82	2+11	2+51	2+23		2+50	2+50	6+98		2+65	2+65	
	LOCATION (REF.)			HURON										W 9TH				HURON		
	SHEET NO.			58	58	58	58	58	58	58	58	58		59	59	59		59	59	

644	DOTTED LINE, 4 INCH (YELLOW OR WHITE)	L.F.																									
644	WORD ON PAVEMENT, 72 INCH	EACH				1													1							1	
644	LANE ARROW	EACH			1		1											1		1			1		1		
644	TRANSVERSE LINE (YELLOW OR WHITE)	L. F.																									
644	CROSSWALK LINE	L.F.							180	127		229	258										36				
644	STOP LINE	L.F.						44			30			70	55						16						
644	CHANNELIZING LINE	L.F.		120													170							80			
644	EDGE LINE	MILE																									
642	ISLAND MARKING, TYPE 2 (YELLOW)	S. F.																									
642	CURB MARKING, TYPE 2 (YELLOW OR WHITE)	L. F.																									
642	CENTER LINE, TYPE 2	MILE														.06											
642	LANE LINE, TYPE 2	MILE	.50																								
LOCATION INFORMATION	SIDE		RT/LT	RT	℄	℄	℄	RT	RT/LT	LT	LT	RT	RT/LT	LT	RT	℄	LT	℄	℄	℄	RT	RT	℄	RT	℄	℄	
LOCATION INFORMATION	STATION	TO	10+00	5+35				5+35	5+45	6+16	5+82	6+95	7+09	6+80	7+00	10+00	8+40				7+30	7+36		10+00			
LOCATION INFORMATION	STATION	FROM	3+40	4+15	4+55	4+85	5+25	5+33	5+39	5+49	5+52	5+74	6+21	6+36	6+45	6+82	6+70	6+95	7+35	7+75	7+14	7+15	8+20	9+20	9+68	9+98	
	LOCATION (REF.)		SUPERIOR																								
	SHEET NO.		59	59	59	59	59	59	59	59	59	59	59	59	59	59	59	59	59	59	59	59	59	59	59	59	

644	DOTTED LINE, 4 INCH (YELLOW OR WHITE)	L.F.															
644	WORD ON PAVEMENT, 72 INCH	EACH															
644	LANE ARROW	EACH															
644	TRANSVERSE LINE (YELLOW OR WHITE)	L. F.															
644	CROSSWALK LINE	L.F.			60	62	75		66			86	102				
644	STOP LINE	L.F.		15				30		15	15			25	25		
644	CHANNELIZING LINE	L.F.															
644	EDGE LINE	MILE															
642	ISLAND MARKING, TYPE 2 (YELLOW)	S. F.															
642	CURB MARKING, TYPE 2 (YELLOW OR WHITE)	L. F.															
642	CENTER LINE, TYPE 2	MILE														.03	
642	LANE LINE, TYPE 2	MILE	.02														
LOCATION INFORMATION	SIDE		LT	RT	RT/LT	LT	RT	RT	RT/LT	LT	RT	RT/LT	RT	LT	RT	RT/LT	
LOCATION INFORMATION	STATION	TO	0+00	3+20	3+30	3+65	3+90	3+83	4+00	4+01	6+46	6+82	7+40	6+88	7+40	7+25	
LOCATION INFORMATION	STATION	FROM	0+00	3+18	3+24	3+31	3+47	3+53	3+82	3+99	6+44	6+58	6+84	6+65	7+15	6+80	
	LOCATION (REF.)		W 49TH														
	SHEET NO.		60	60	60	60	60	60	60	60	60	60	60	60	60	60	

644	DOTTED LINE, 4 INCH (YELLOW OR WHITE)	L.F.																											0
644	WORD ON PAVEMENT, 72 INCH	EACH																	1										5
644	LANE ARROW	EACH							1	1								1		1				1	1	1	1		22
644	TRANSVERSE LINE (YELLOW OR WHITE)	L. F.																			725(Y)								725
644	CROSSWALK LINE	L.F.										189	115	73	170														1828
644	STOP LINE	L.F.									55					44													526
644	CHANNELIZING LINE	L.F.			100												105					330							1081
644	EDGE LINE	MILE		.04(W)																			.03(Y)						0.07
642	ISLAND MARKING, TYPE 2 (YELLOW)	S. F.																											0
642	CURB MARKING, TYPE 2 (YELLOW OR WHITE)	L. F.																											0
642	CENTER LINE, TYPE 2	MILE	.32																										0.60
642	LANE LINE, TYPE 2	MILE				.29	.29	.15																					1.72
LOCATION INFORMATION	SIDE		RT/LT	RT/LT	RT	RT	LT	RT	℄	℄	RT	RT/LT	RT	LT	RT/LT	LT	LT	℄	℄	℄	RT/LT	RT	RT/LT	LT	LT	LT	LT		SUBTOTAL:
LOCATION INFORMATION	STATION	TO	94+12	85+20	85+00	99+09	99+09	91+71			85+06	85+37	85+52	86+06	86+10	86+19	87+05				94+12	95+01	95+01						
LOCATION INFORMATION	STATION	FROM	84+00	84+00	84+00	84+00	84+00	84+00	84+33	84+73	84+75	84+83	84+92	85+70	85+61	85+93	86+00	86+09	86+49	86+79	87+25	91+71	94+12	92+21	92+71	93+21	93+71		
	LOCATION (REF.)		LORAIN																										
	SHEET NO.		61	61	61	61	61	61	61	61	61	61	61	61	61	61	61	61	61	61	61	61	61	61	61	61	61		

HOWARD NEEDLES TAMMEN & BERGENDOFF
ARCHITECTS ENGINEERS PLANNERS
HNTB

MADE BY: DAK DATE: 4/94
DRAWN BY: DJF DATE: 4/94
CHECKED BY: JPR DATE: 4/94
SCALE: N/A
DSPMSQ01

PAVEMENT MARKING QUANTITIES

SHEET NO.	LOCATION (REF.)	STATION FROM	STATION TO	SIDE	644 DOTTED LINE, 4 INCH (YELLOW OR WHITE) L.F.	644 WORD ON PAVEMENT, 72 INCH EACH	644 LANE ARROW EACH	644 TRANSVERSE LINE (YELLOW OR WHITE) L. F.	644 CROSSWALK LINE L.F.	644 STOP LINE L.F.	644 CHANNELIZING LINE L.F.	644 EDGE LINE MILE	642 ISLAND MARKING, TYPE 2 (YELLOW) S. F.	642 CURB MARKING, TYPE 2 (YELLOW OR WHITE) L. F.	642 CENTER LINE, TYPE 2 MILE	642 LANE LINE, TYPE 2 MILE
61	LORAIN	94+21		RT			1									
61		94+51		RT		1										
61		94+91		RT			1									
61		94+60	94+88	LT					48							
61		94+99	95+01	RT						33						
61		95+12	96+01	LT					165							
61		95+25	95+76	RT					93							
61		95+97	96+07	RT/LT					155							
61		96+11	96+13	LT						42						
61		96+11	97+02	LT							91					
61		96+21		LT			1									
61		96+61		LT			1									
61		97+02	99+09	LT												.04
61		99+07	99+09	RT						26						
61		99+13	99+23	RT/LT					150							
61		99+23	99+84	LT					120							
61		99+36	99+92	RT					110							
61		99+92	100+02	RT/LT					127							
61		100+07	100+09	LT						24						
61		100+07	131+50	℄											.60	
61		105+08	105+10	RT						23						
61		105+14	105+20	RT/LT					90							
61		105+24	105+64	RT					76							
61		105+24	105+60	LT					66							
61		105+71	105+77	RT/LT					90							
61		105+81	105+83	LT						23						
61		110+89	110+91	RT						20						
61		110+95	111+01	RT/LT					80							
61		111+09	111+46	LT					67							
61		111+46	111+52	RT/LT					89							
61		111+57	111+59	LT						20						
61		116+10	116+12	RT						20						
61		116+20	116+26	RT/LT					86							
61		116+27	116+65	LT					71							
61		116+32	116+68	RT					65							
61		116+76	116+82	RT/LT					80							
61		116+89	116+91	LT						20						
61		122+66		RT						20						
61		122+70	122+76	RT/LT					82							
61		122+80	123+26	LT					85							
61		122+80	124+19	RT					269							
61		123+50		LT						20						
61		125+42	125+87	LT					83							
61		129+86	129+88	RT						20						
61		129+92	130+30	RT/LT					100							
61		130+12	130+50	RT					76							
61		130+40	130+85	LT					84							
61		130+63	131+00	RT/LT					100							
61		131+04	131+06	LT						20						
62	W 6TH	3+80	3+86	RT/LT					120							
62		3+90	3+92	LT						30						
62		3+90	4+30	LT							80					
62		4+30	5+25	LT												.04
62		3+90	16+54	℄											.24	
62		6+47	6+71	RT					48							
62		6+53	6+75	LT					40							
62		6+78	6+85	RT/LT					120							
62		9+43	9+45	RT						30						
62		9+49	9+55	RT/LT					120							
62		9+70	10+31	RT/LT					240							
62		10+43	10+49	RT/LT					120							
62		10+53	10+55	LT						30						
62		15+87	17+00	LT							230					
62		16+52	16+54	RT						23						
62		16+58	16+68	RT/LT					120							
62	W 3RD	3+65	3+71	RT/LT					120							
62		3+75	3+77	LT						30						
62		3+75	16+56	℄											.24	
62		3+75	9+05	RT												.20
62		3+75	9+48	LT												.22
62		6+00	6+02	RT						30						
62		6+13	6+67	RT					93							
62		6+67	6+90	RT/LT					129							
62		6+85	6+96	LT						32						
62		9+05	9+48	RT							86					
62		9+46	9+48	RT						30						
62		9+52	9+58	RT/LT					120							
62		9+74	10+33	RT/LT					232							
SUBTOTAL:					0	1	4	0	4329	566	487	0	0	0	1.08	0.50

HOWARD NEEDLES TAMMEN & BERGENDOFF
ARCHITECTS ENGINEERS PLANNERS
HNTB

MADE BY: DAK DATE: 4/94
DRAWN BY: DJF DATE: 4/94
CHECKED BY: JPR DATE: 4/94
SCALE: N/A
DSPMSQ01

PAVEMENT MARKING QUANTITIES

FHWA REGION	STATE	PROJECT	
5	OHIO		

CUYAHOGA COUNTY
CUY-6-14.99

53B / 412

LOCATION (REF.)	SHEET NO.	STATION FROM	STATION TO	SIDE	644 DOTTED LINE, 4 INCH (YELLOW OR WHITE) (L.F.)	644 WORD ON PAVEMENT, 72 INCH (EACH)	644 LANE ARROW (EACH)	644 TRANSVERSE LINE (YELLOW OR WHITE) (L.F.)	644 CROSSWALK LINE (L.F.)	644 LANE LINE (MILE)	644 STOP LINE (L.F.)	644 CHANNELIZING LINE (L.F.)	644 EDGE LINE (MILE)	642 REMOVAL OF PAVEMENT MARKINGS (L.F.)	642 ISLAND MARKING, TYPE 2 (YELLOW) (S.F.)	642 CURB MARKING, TYPE 2 (YELLOW OR WHITE) (L.F.)	642 CENTER LINE, TYPE 2 (MILE)	642 LANE LINE, TYPE 2 (MILE)
W 3RD	62	10+45	10+51	RT/LT					120									
	62	10+55	10+57	LT							30							
	62	10+55	11+10	LT								110						
	62	10+55	16+06	RT														.10
	62	11+10	16+56	LT														.21
	62	16+06	16+56	RT								50						
	62	16+54	16+56	RT							30							
	62	16+60	16+70	RT/LT					120									
ONTARIO	62	3+48	3+68	RT/LT					157									
	62	3+72	3+74	LT							33							
	62	3+72	4+17	LT								90						
	62	3+72	16+65	℄													.24	
	62	3+72	5+05	RT														.05
	62	4+17	5+40	LT														.05
	62	5+05	5+40	RT								70						
	62	5+38	5+40	RT							33							
	62	5+44	5+64	RT/LT					150									
	62	5+64	6+25	RT/LT					200									
	62	6+22	6+42	RT/LT					146									
	62	6+46	6+48	LT							33							
	62	6+46	7+00	LT								108						
	62	6+46	8+88	RT														.09
	62	7+00	16+65	LT														.37
	62	8+88	9+41	RT								106						
	62	9+39	9+41	RT							33							
	62	9+45	9+55	RT/LT					133									
	62	9+55	10+37	RT					153									
	62	9+70	10+34	LT					122									
	62	10+33	10+43	RT/LT					141									
	62	10+47	10+49	LT							33							
	62	10+47	16+15	RT														.22
	62	16+15	16+65	RT								100						
	62	16+63	16+65	RT							33							
	62	16+69	16+82	RT/LT					140									
LAKESIDE	62	4+88	5+75	RT								220						
	62	5+00	5+75	RT				200(W)										
	62	4+88	6+86	LT									.04(Y)					
	62	4+88	8+88	RT														.08
	62	6+86	15+85	℄													.17	
	62	6+86	15+85	LT														.34
	62	8+90	9+40	RT								100						
	62	9+38	9+40	RT							30							
	62	9+44	9+50	RT/LT					128									
	62	9+63	10+13	LT					98									
	62	10+29	10+43	RT/LT					128									
	62	10+47	10+49	LT							30							
	62	10+47	15+45	RT														.19
	62	15+45	15+85	RT								80						
	62	15+83	15+85	RT							30							
	62	15+90	16+08	RT/LT					124									
	62	16+85	16+97	RT/LT					120									
SHOREWAY	63	84+00	99+50	RT														.59
	63	84+00	86+70	RT									.05(W)					
	63	84+00	99+50	RT						.29(Y)								
	63	84+97	85+92	RT								190						
	63	84+97	85+92	RT				85(W)										
	63	85+92	89+25	RT									.06(W)					
	63	85+92	89+25	RT									.06(Y)					
	63	85+92	99+50	RT										7413				
	63	89+00	99+50	RT									.20(W)					
	63	85+92	96+60	RT				1240(Y)										
	63	89+25	92+00	RT														.05
	63	96+60	99+50	RT														.05

	SUBTOTAL:	SUBTOTAL (SHEET 51):	SUBTOTAL (SHEET 52):	SUBTOTAL (SHEET 53):	SUBTOTAL (SHEET 53A):	TOTAL:
DOTTED LINE, 4 INCH (YELLOW OR WHITE)	0	916	515	0	0	1431
WORD ON PAVEMENT, 72 INCH	0	9	9	5	1	24
LANE ARROW	0	28	26	22	4	80
TRANSVERSE LINE (YELLOW OR WHITE)	1525	605	440	725	0	3295
CROSSWALK LINE	2180	1361	882	1828	4329	10580
LANE LINE	0.29	-	-	-	-	0.29
STOP LINE	348	385	224	526	566	2049
CHANNELIZING LINE	1224	1658	3652	1081	487	8102
EDGE LINE	0.41	0.08	0	0.07	0	0.56
REMOVAL OF PAVEMENT MARKINGS	7413	-	-	-	-	7413
ISLAND MARKING, TYPE 2 (YELLOW)	0	25	117	0	0	142
CURB MARKING, TYPE 2 (YELLOW OR WHITE)	0	401	0	0	0	401
CENTER LINE, TYPE 2	0.41	0.58	0.77	0.60	1.08	3.44
LANE LINE, TYPE 2	2.39	1.21	2.29	1.72	0.50	8.11

HOWARD NEEDLES TAMMEN & BERGENDOFF
ARCHITECTS ENGINEERS PLANNERS
HNTB

MADE BY: DAK DATE: 4/94
DRAWN BY: DJF DATE: 4/94
CHECKED BY: JPR DATE: 4/94
SCALE: N/A
DSPMSQ01

TRAFFIC CONTROL PLAN

FHWA REGION	STATE	PROJECT	
5	OHIO		

54
412

CUYAHOGA COUNTY
CUY-6-14.99

LEGEND

- (A) ITEM 642 – LANE LINE, TYPE 2
- (B) ITEM 642 – CENTER LINE, SOLID, DOUBLE, TYPE 2
- (C) ITEM 644 – CHANNELIZING LINE
- (D) ITEM 644 – STOP LINE
- (E) ITEM 644 – CROSSWALK LINE
- (F) ITEM 644 – TRANSVERSE LINE (WHITE), 12' C/C
- (G) ITEM 642 – CURB MARKING (WHITE), TYPE 2
- (H) ITEM 644 – LANE ARROW
- (I) ITEM 644 – WORD ON PAVEMENT, 72-IN.
- (J) ITEM 644 – DOTTED LINE, 4-IN., (WHITE)
- (K) ITEM 644 – DOTTED LINE, 4-IN., (YELLOW)
- (M) ITEM 642 – CURB MARKING, (YELLOW), TYPE 2
- (N) ITEM 642 – ISLAND MARKING (YELLOW), TYPE 2
- (P) ITEM 644 – EDGE LINE, (WHITE)
- (Q) ITEM 644 – TRANSVERSE LINE (YELLOW), 12' C/C

– EXISTING TO REMAIN
– BY OTHER
– REMOVE FOR STORAGE
– PROPOSED
– REMOVE AND REERECT

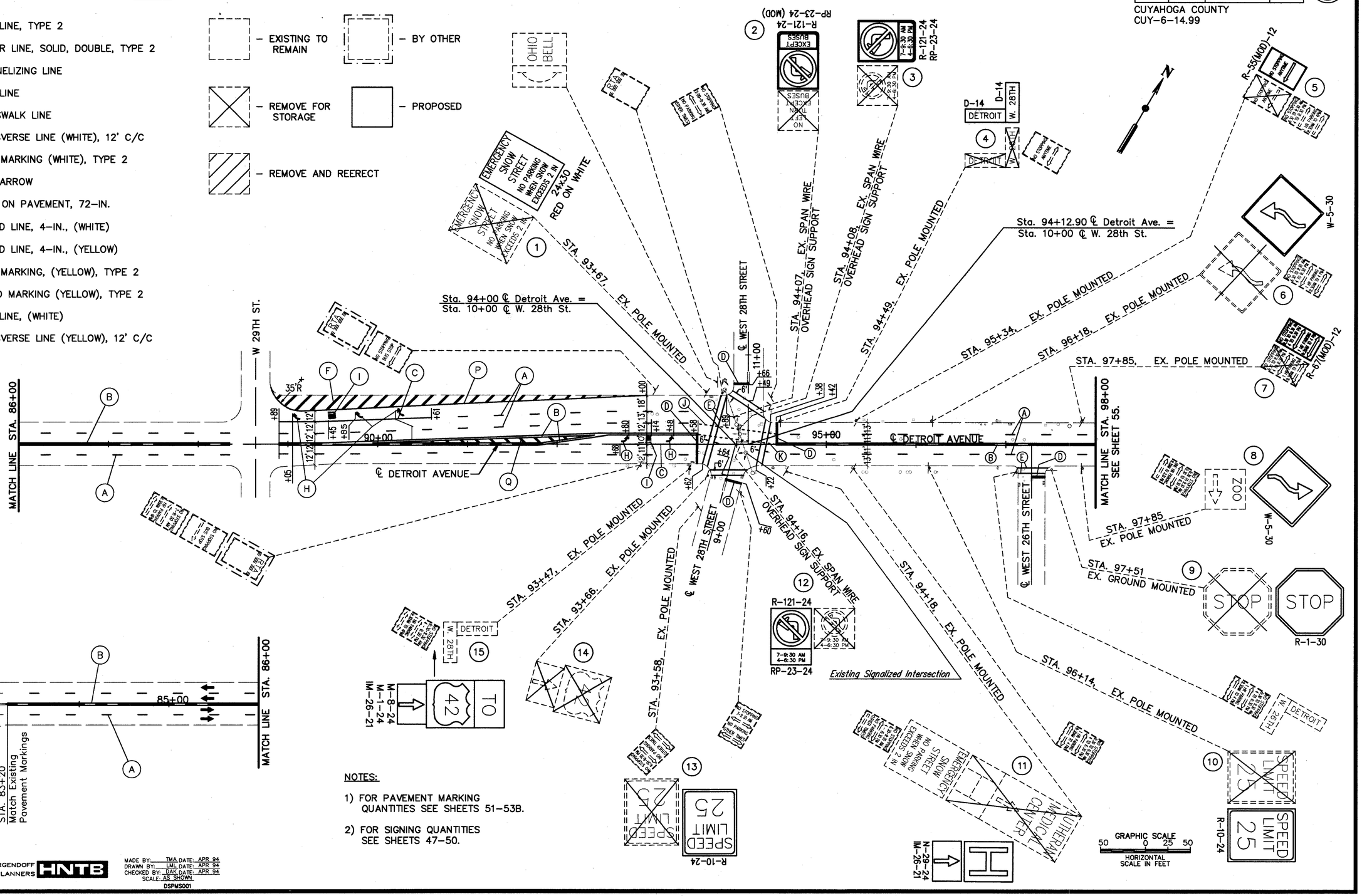

NOTES:

1) FOR PAVEMENT MARKING QUANTITIES SEE SHEETS 51–53B.

2) FOR SIGNING QUANTITIES SEE SHEETS 47–50.

HOWARD NEEDLES TAMMEN & BERGENDOFF
ARCHITECTS ENGINEERS PLANNERS
HNTB

MADE BY: TMA DATE: APR 94
DRAWN BY: LML DATE: APR 94
CHECKED BY: DAK DATE: APR 94
SCALE: AS SHOWN.
DSPMS001

TRAFFIC CONTROL PLAN

FHWA REGION	STATE	PROJECT	
5	OHIO		

55
412

CUYAHOGA COUNTY
CUY-6-14.99

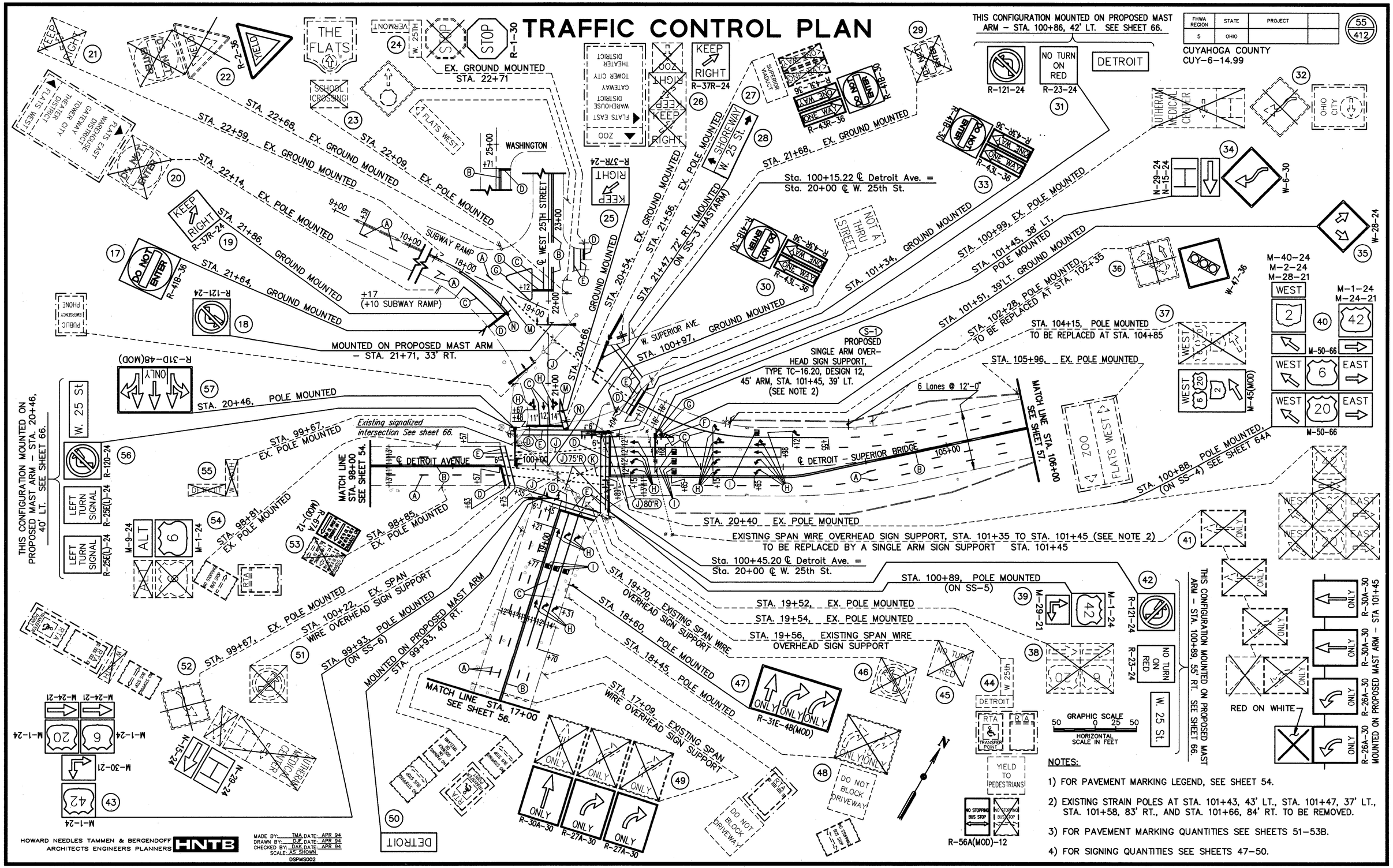

TRAFFIC CONTROL PLAN

FHWA REGION	STATE	PROJECT	
5	OHIO		

56
412

CUYAHOGA COUNTY
CUY-6-14.99

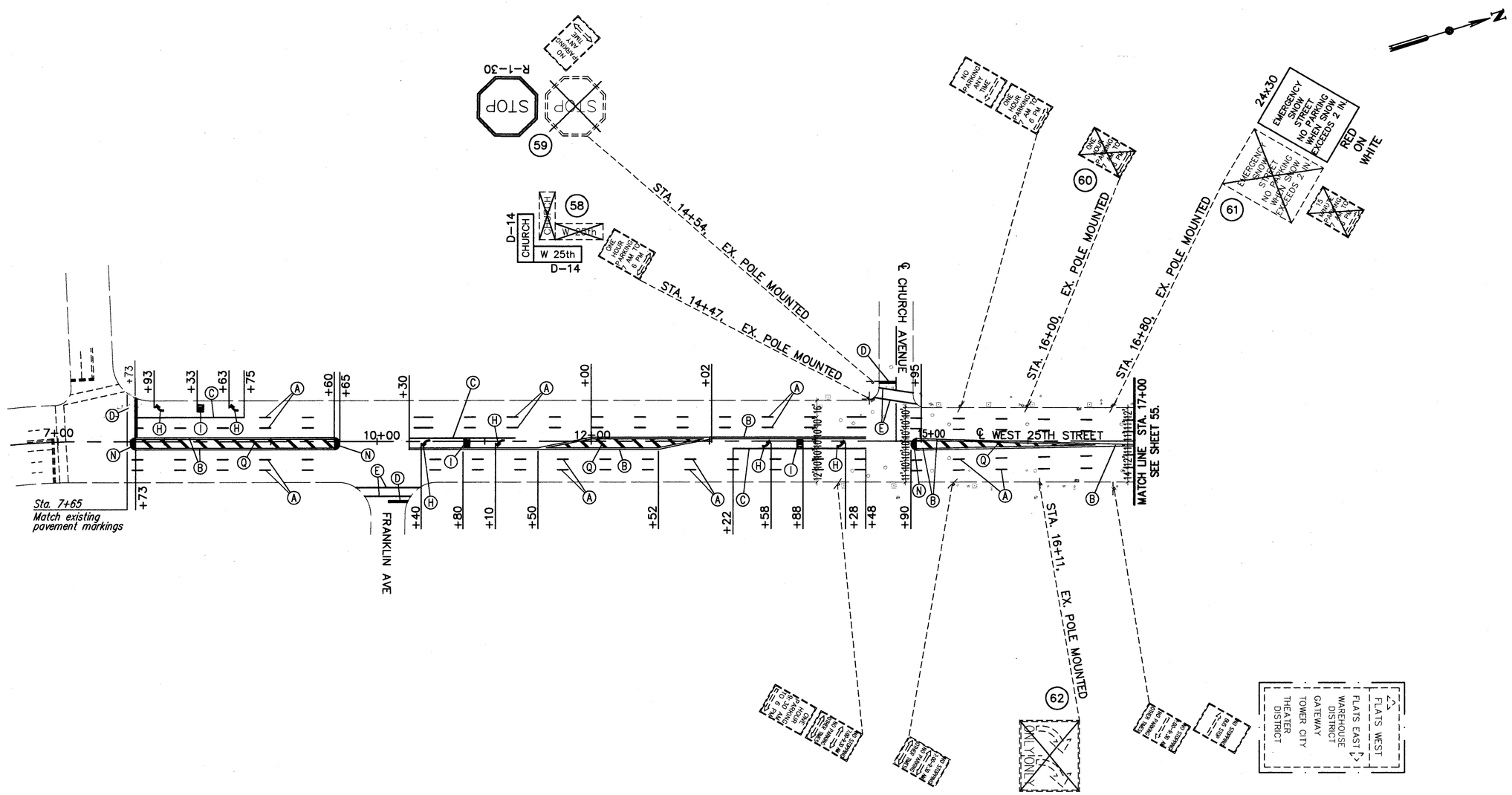

NOTES:

1) FOR PAVEMENT MARKING LEGEND SEE SHEET 54.

2) FOR PAVEMENT MARKING QUANTITIES SEE SHEETS 51–53B.

3) FOR SIGNING QUANTITIES SEE SHEETS 47–50.

GRAPHIC SCALE
50 0 25 50
HORIZONTAL SCALE IN FEET

HOWARD NEEDLES TAMMEN & BERGENDOFF
ARCHITECTS ENGINEERS PLANNERS HNTB

MADE BY: TMA DATE: APR 94
DRAWN BY: LML DATE: APR 94
CHECKED BY: DAK DATE: APR 94
SCALE: AS SHOWN
DSPMS005

TRAFFIC CONTROL PLAN

FHWA REGION	STATE	PROJECT	
5	OHIO		

CUYAHOGA COUNTY
CUY-6-14.99

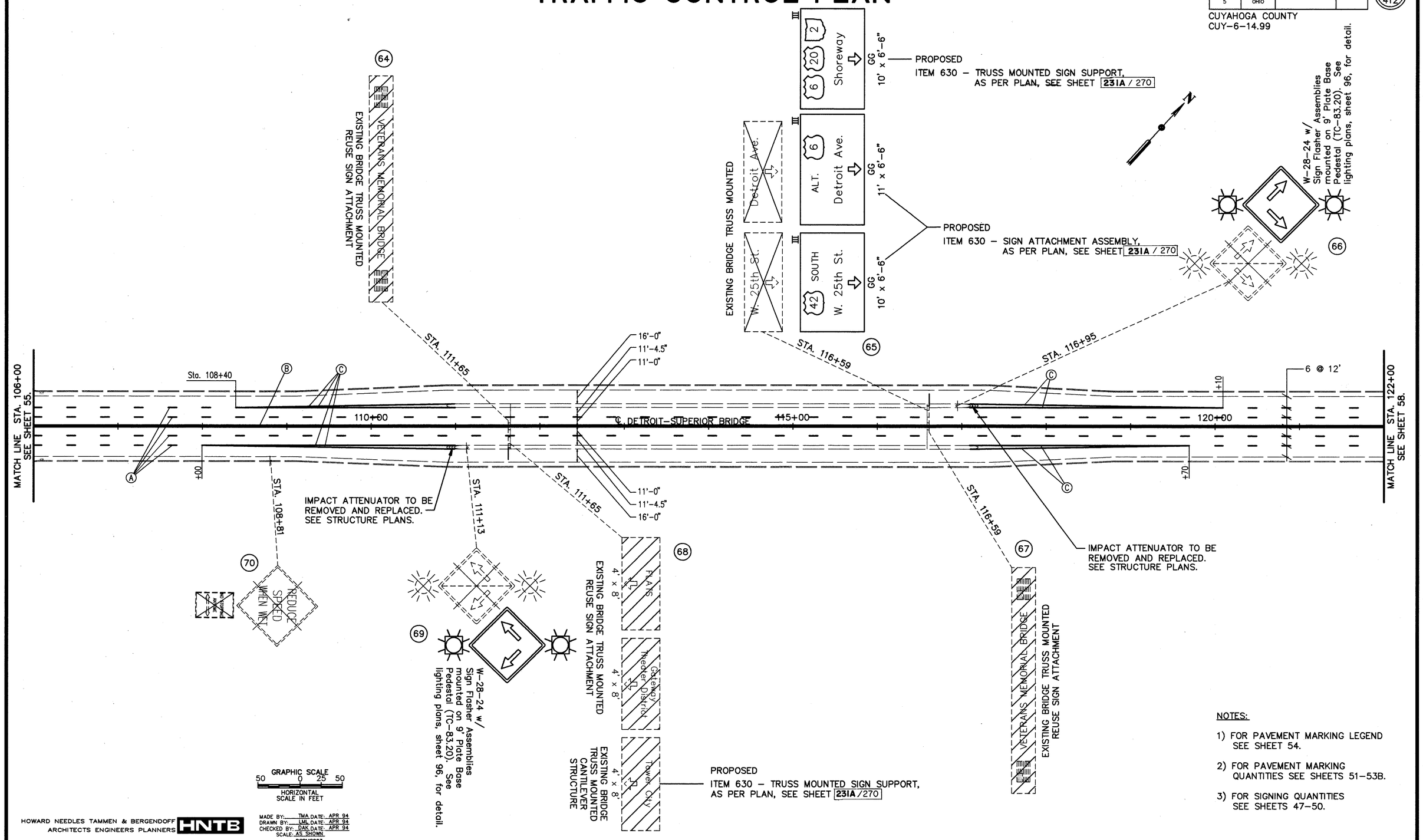

NOTES:

1) FOR PAVEMENT MARKING LEGEND SEE SHEET 54.

2) FOR PAVEMENT MARKING QUANTITIES SEE SHEETS 51–53B.

3) FOR SIGNING QUANTITIES SEE SHEETS 47–50.

HOWARD NEEDLES TAMMEN & BERGENDOFF
ARCHITECTS ENGINEERS PLANNERS
HNTB

MADE BY: TMA DATE: APR 94
DRAWN BY: LML DATE: APR 94
CHECKED BY: DAK DATE: APR 94
SCALE: AS SHOWN
DSPMS003

TRAFFIC CONTROL PLAN

FHWA REGION	STATE	PROJECT	
5	OHIO		

58
412

CUYAHOGA COUNTY
CUY-6-14.99

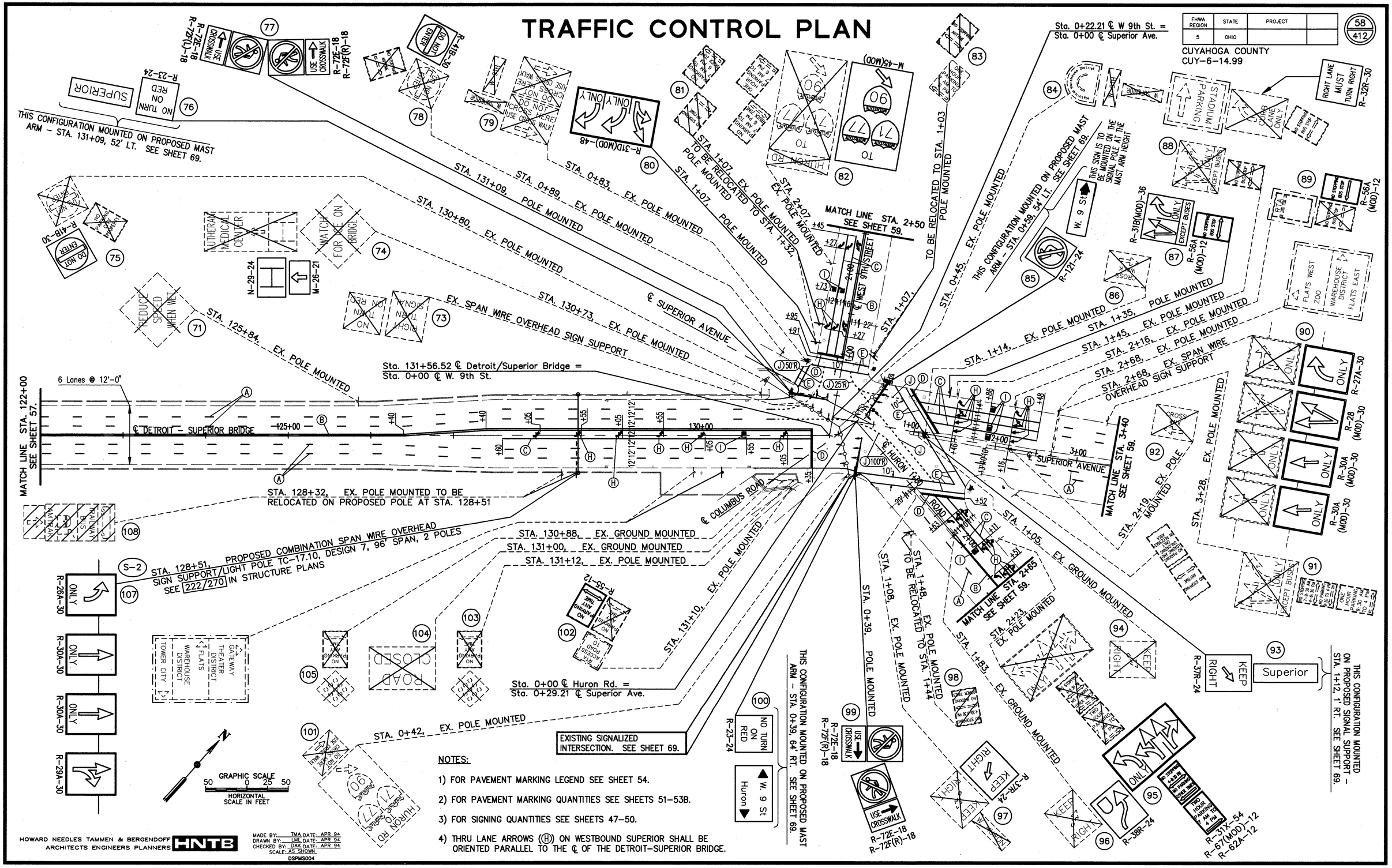

TRAFFIC CONTROL PLAN

FHWA REGION	STATE	PROJECT	
5	OHIO		

59
412

CUYAHOGA COUNTY
CUY-6-14.99

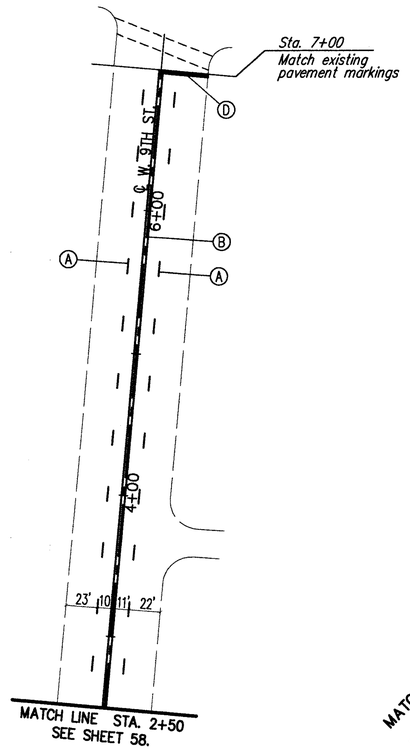

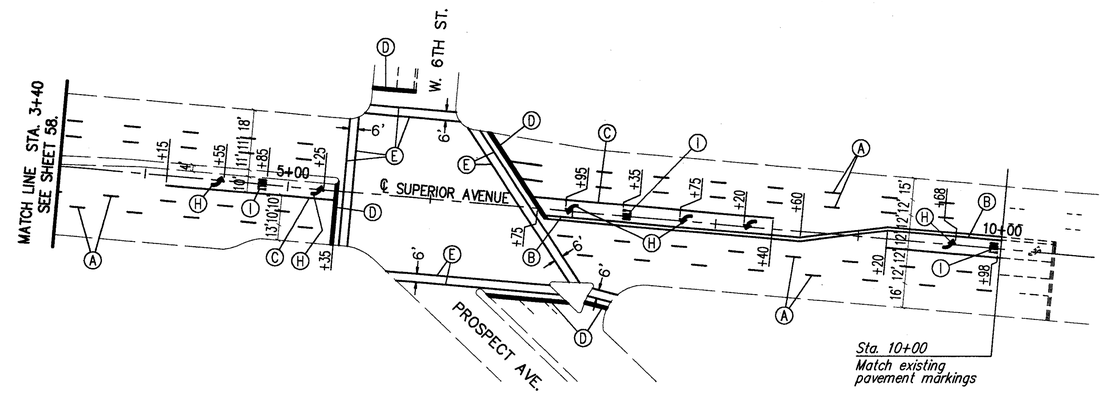

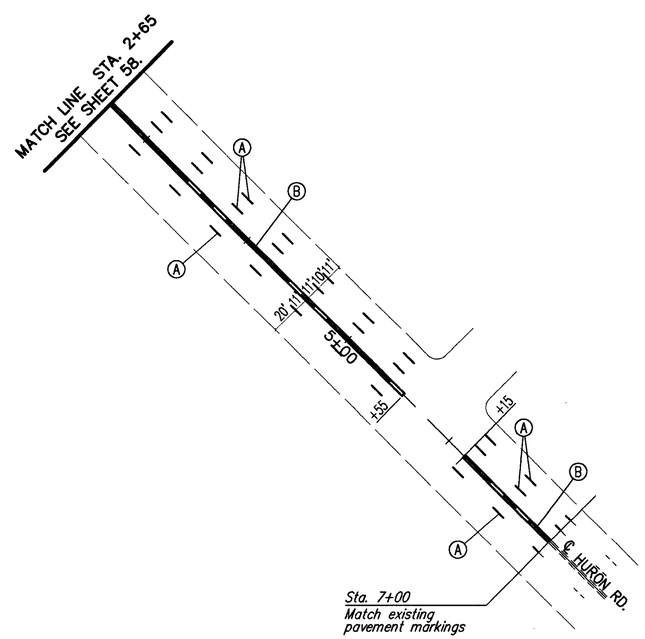

NOTES:

1) FOR PAVEMENT MARKING LEGEND SEE SHEET 54.

2) FOR PAVEMENT MARKING QUANTITIES SEE SHEETS 51–53B.

GRAPHIC SCALE
50 0 25 50
HORIZONTAL SCALE IN FEET

HOWARD NEEDLES TAMMEN & BERGENDOFF
ARCHITECTS ENGINEERS PLANNERS HNTB

MADE BY: JPR DATE: APR 94
DRAWN BY: DJF DATE: APR 94
CHECKED BY: DAK DATE: APR 94
SCALE: AS SHOWN
DSPMS011

WEST 49TH STREET PAVEMENT MARKING PLAN

FHWA REGION	STATE	PROJECT	
5	OHIO		

60
412

CUYAHOGA COUNTY
CUY-6-14.99

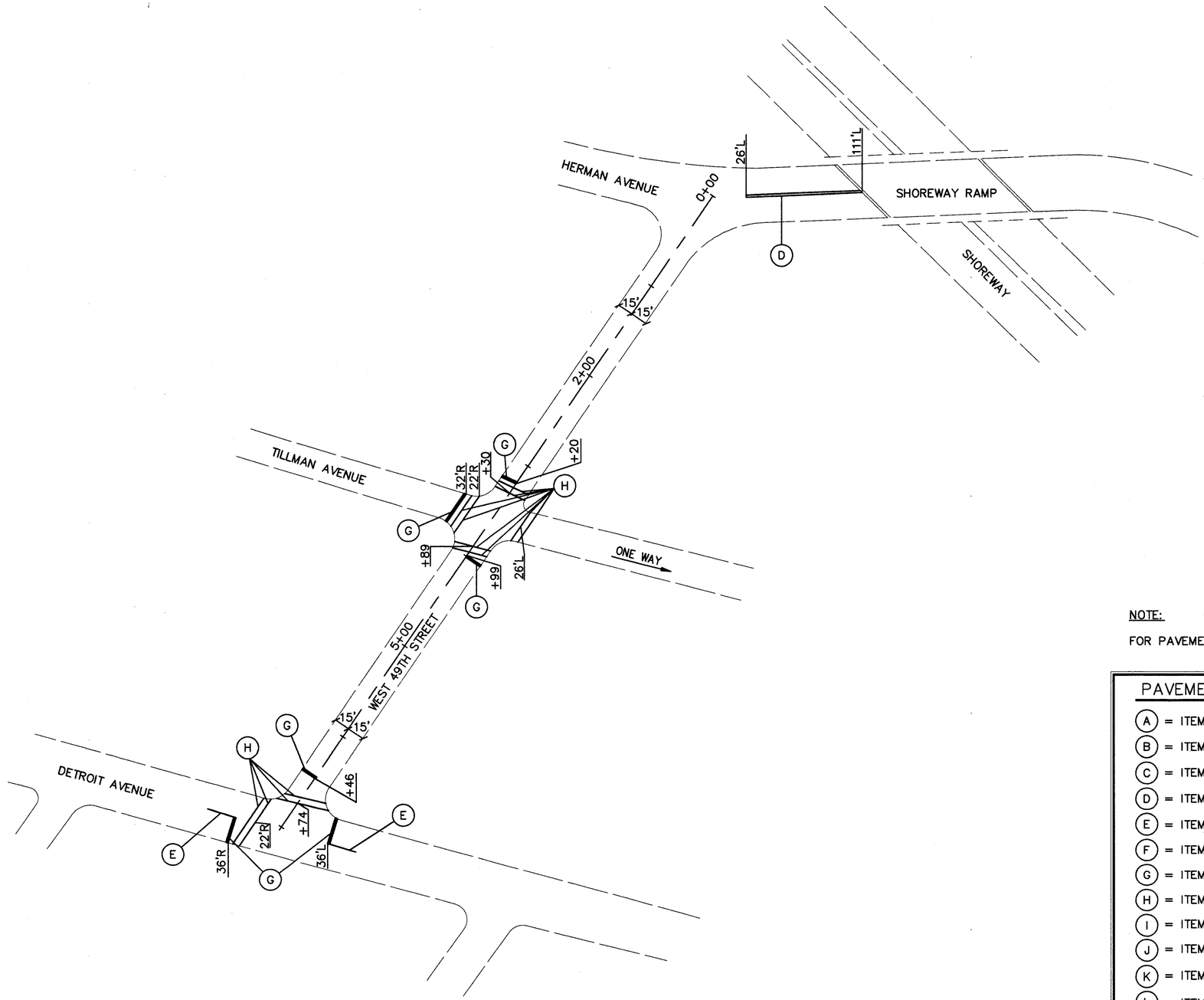

NOTE:

FOR PAVEMENT MARKING QUANTITIES SEE SHEETS 51–53B.

PAVEMENT MARKING KEY

- (A) = ITEM 644 – EDGE LINE, YELLOW
- (B) = ITEM 644 – EDGE LINE, WHITE
- (C) = ITEM 642 – LANE LINE, TYPE 2
- (D) = ITEM 642 – CENTERLINE, SOLID DOUBLE, TYPE 2
- (E) = ITEM 642 – CENTERLINE, SINGLE, BROKEN, TYPE 2
- (F) = ITEM 644 – CHANNELIZING LINE
- (G) = ITEM 644 – STOP LINE
- (H) = ITEM 644 – CROSSWALK LINE
- (I) = ITEM 644 – TRANSVERSE LINE, YELLOW, 12' C/C
- (J) = ITEM 644 – TRANSVERSE LINE, WHITE, 12' C/C
- (K) = ITEM 644 – LANE ARROW
- (L) = ITEM 644 – WORD ON PAVEMENT, 72"
- (M) = ITEM 644 – LANE LINE

HOWARD NEEDLES TAMMEN & BERGENDOFF
ARCHITECTS ENGINEERS PLANNERS
HNTB

MADE BY: TMA DATE: APR 94
DRAWN BY: MJG DATE: APR 94
CHECKED BY: DAK DATE: APR 94
SCALE: AS SHOWN
DSPMS008

GRAPHIC SCALE
50 0 25 50
HORIZONTAL SCALE IN FEET

TRAFFIC CONTROL PLAN

LORAIN AVENUE PAVEMENT MARKING PLAN

FHWA REGION	STATE	PROJECT	
5	OHIO		

61
412

CUYAHOGA COUNTY
CUY-6-14.99

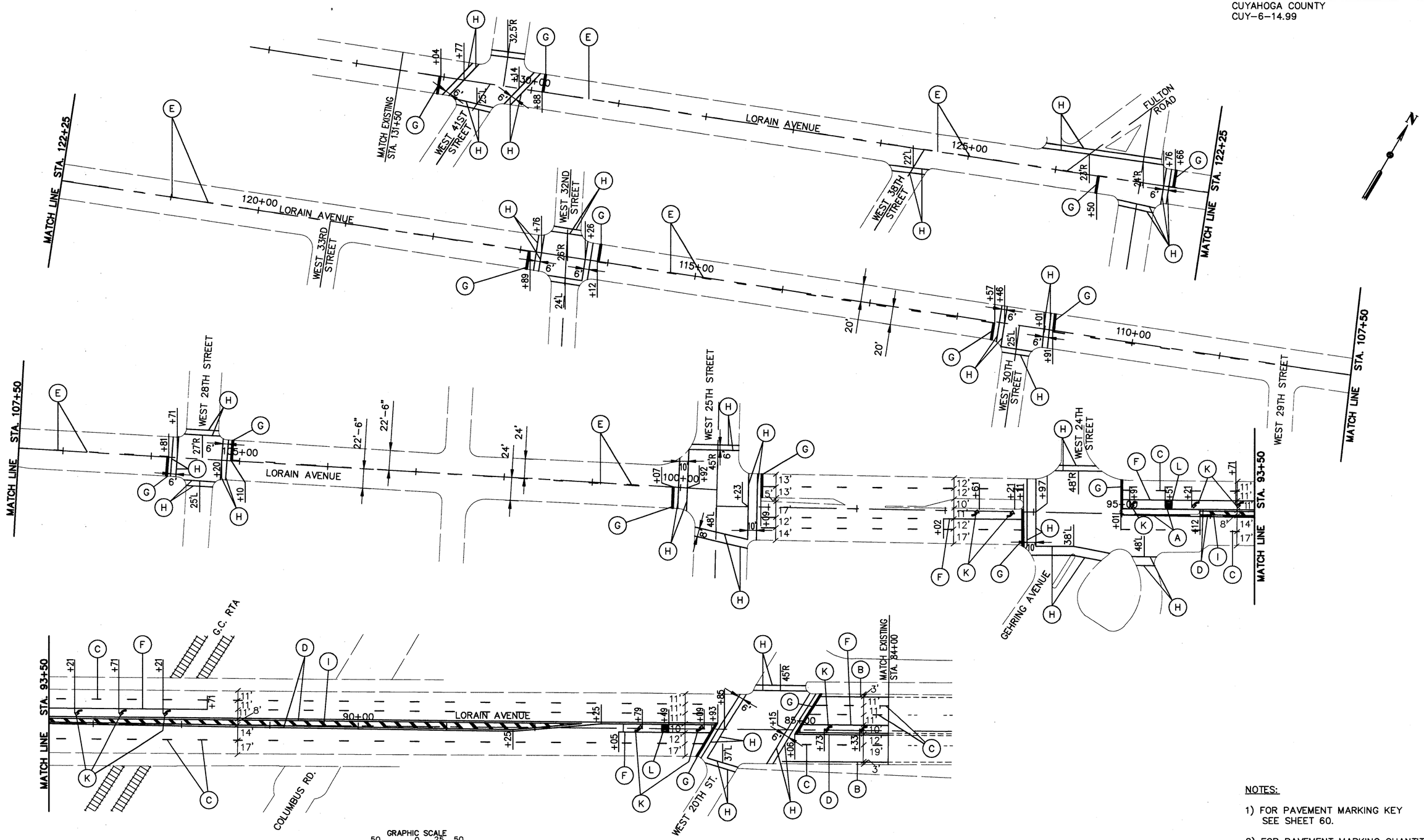

HOWARD NEEDLES TAMMEN & BERGENDOFF
ARCHITECTS ENGINEERS PLANNERS
HNTB

MADE BY: TMA DATE: APR 94
DRAWN BY: MJG DATE: APR 94
CHECKED BY: DAK DATE: APR 94
SCALE: AS SHOWN
DSPMS009

GRAPHIC SCALE
50 0 25 50
HORIZONTAL SCALE IN FEET

NOTES:

1) FOR PAVEMENT MARKING KEY SEE SHEET 60.

2) FOR PAVEMENT MARKING QUANTITIES SEE SHEETS 51-53B.

TRAFFIC CONTROL PLAN

ONTARIO/W. 3RD/W. 6TH/LAKESIDE PAVEMENT MARKING PLAN

FHWA REGION	STATE	PROJECT	
5	OHIO		

62/412

CUYAHOGA COUNTY
CUY-6-14.99

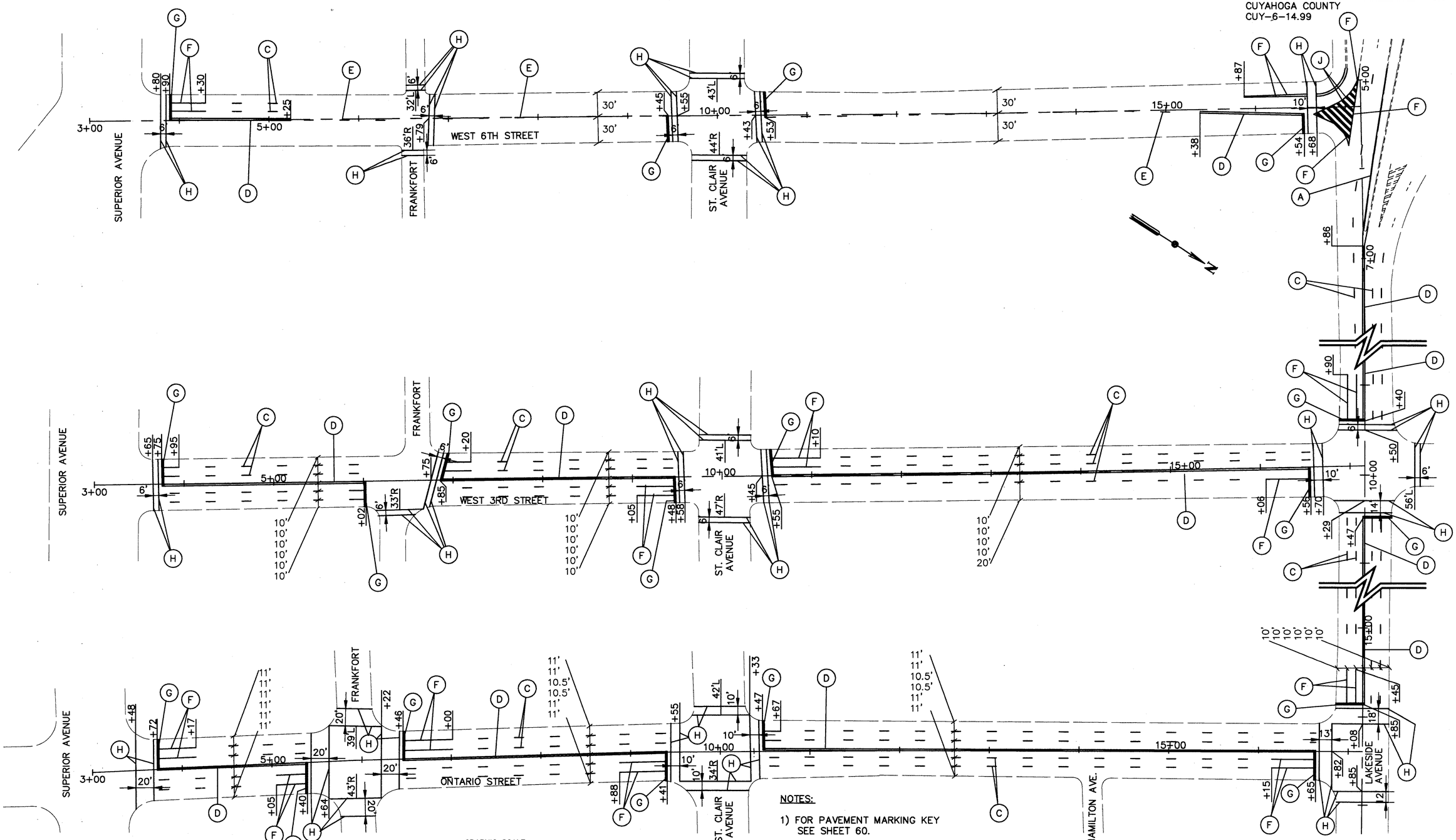

NOTES:

1) FOR PAVEMENT MARKING KEY SEE SHEET 60.

2) FOR PAVEMENT MARKING QUANTITIES SEE SHEETS 51-53B.

HOWARD NEEDLES TAMMEN & BERGENDOFF
ARCHITECTS ENGINEERS PLANNERS HNTB

MADE BY: TMA DATE: APR 94
DRAWN BY: MJG DATE: APR 94
CHECKED BY: DAK DATE: APR 94
SCALE: AS SHOWN
DSPMS010

TRAFFIC CONTROL PLAN

MEMORIAL SHOREWAY
PAVEMENT MARKING PLAN

FHWA REGION	STATE	PROJECT	
5	OHIO		

63
412

CUYAHOGA COUNTY
CUY- 6- 14.99

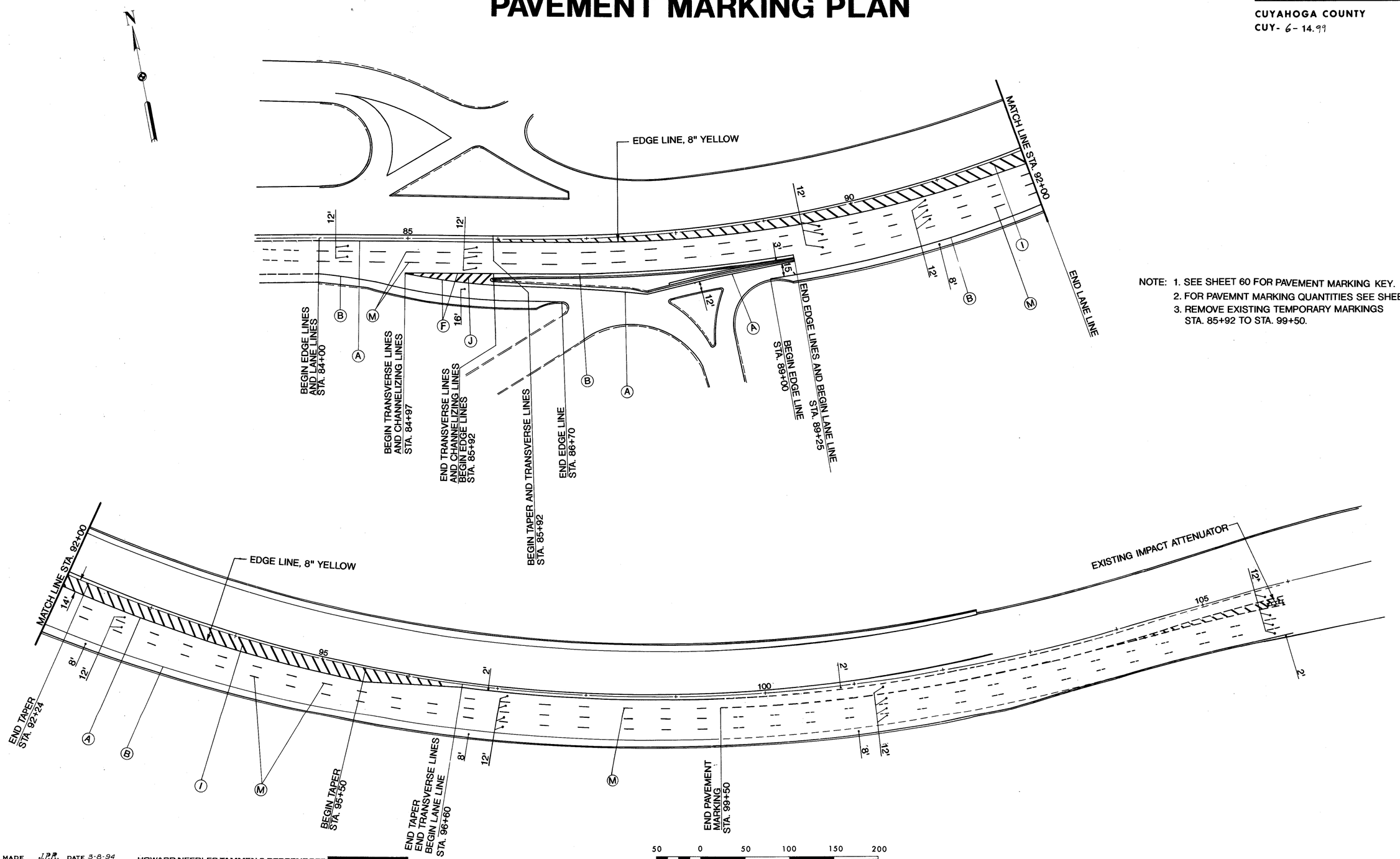

NOTE: 1. SEE SHEET 60 FOR PAVEMENT MARKING KEY.
2. FOR PAVEMNT MARKING QUANTITIES SEE SHEETS 51-53B.
3. REMOVE EXISTING TEMPORARY MARKINGS STA. 85+92 TO STA. 99+50.

MADE TPB DATE 3-8-94
TRACED DATE 3-9-94
CHECKED DATE 3-10-94
SCALE 1" = 20'

HOWARD NEEDLES TAMMEN & BERGENDOFF
ARCHITECTS ENGINEERS PLANNERS
HNTB

TRAFFIC CONTROL PLAN

OVERHEAD SIGN SUPPORT DETAILS

FHWA REGION	STATE	PROJECT	
5	OHIO		

64
412

CUYAHOGA COUNTY
CUY-6-14.99

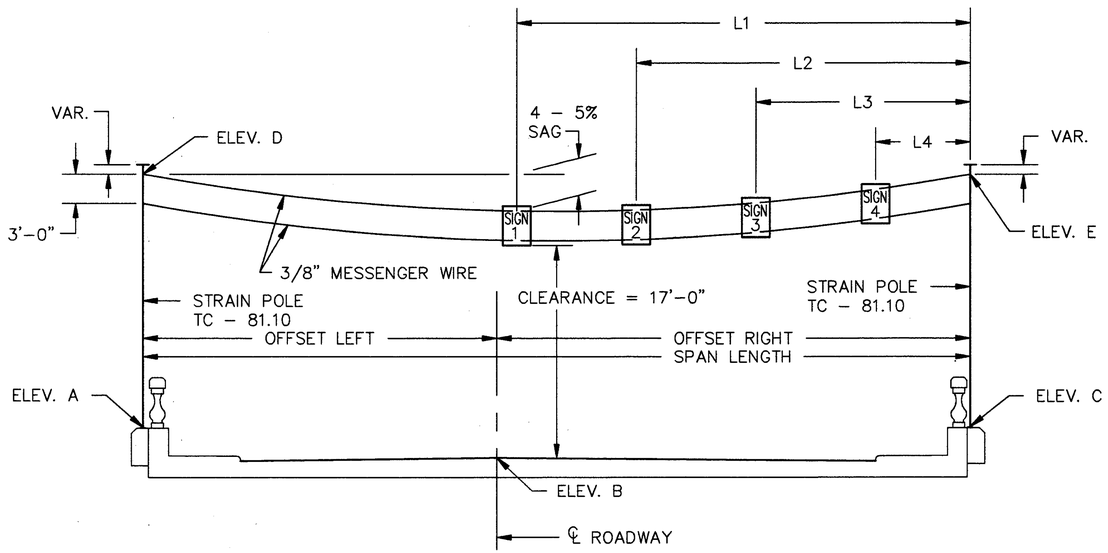

SPAN WIRE
OVERHEAD SIGN SUPPORT
TC–17.10
ELEVATION VIEW
(Looking Upstation)
No Scale

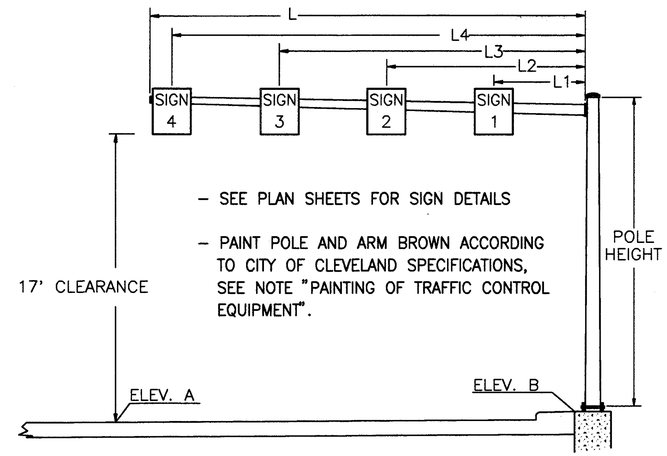

OVERHEAD SUPPORT TYPE TC–16.20
NO SCALE

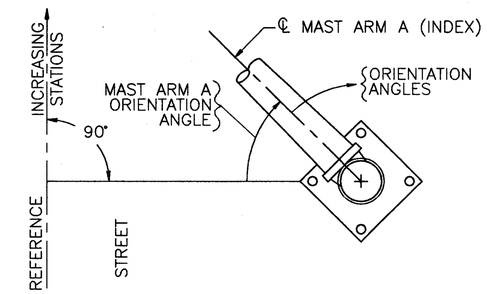

NOTES:
1. ALL ANGLES MEASURED CLOCKWISE
2. BASE PLATE IS ORIENTED SQUARE TO MAST ARM A (LARGEST ARM) EVEN IF SUPPORT HAS TWO MAST ARMS.

MAST ARM ANGLE DETAIL
NO SCALE

FROM SHEET	REFERENCE STREET	SUPPORT NO.	SPAN WIRE SIGN SUPPORT – TYPE TC – 17.10																	ELEVATION				
			DESIGN NO.	LEFT POLE			RIGHT POLE			SPAN	L1	SIGN 1 AREA	L2	SIGN 2 AREA	L3	SIGN 3 AREA	L4	SIGN 4 AREA	CLEARANCE	A	B	C	D	E
				STATION	OFFSET	HEIGHT	STATION	OFFSET	HEIGHT															
										FT.	FT.	SQ. FT.	FT.	SQ. FT.	FT.	SQ. FT.	FT.	SQ. FT.						
58	DET/SUP BR	S–2	7	128+51	50	24	128+51	46	24	96	49	7.5	37	7.5	25	7.5	13	7.5	17.0	656.8	654.3	656.6	678.8	678.8

SINGLE ARM OVERHEAD SIGN SUPPORT TYPE TC–16.20

FROM SHEET	REFERENCE STREET	SUPPORT NO.	STATION	OFFSET	POLE DESIGN NO.	POLE HEIGHT (FT)	L (FT.)	L1 (FT.)	AREA SIGN 1 (S.F.)	L2 (FT.)	AREA SIGN 2 (S.F.)	L3 (FT.)	AREA SIGN 3 (S.F.)	L4 (FT.)	AREA SIGN 4 (S.F.)	ELEVATION A	ELEVATION B	MAST ARM A ANGLE (DEG)	ANGLES (DEG.) FROM MAST ARM A	
																			2" CONDUIT ELL (CAPPED)	HAND HOLE
55	DETROIT	S–1	101+45	39'LT	12	20	45	8	7.5	20	7.5	32	7.5	43.75	7.5	669.1	669.2	0	180	180

HOWARD NEEDLES TAMMEN & BERGENDOFF
ARCHITECTS ENGINEERS PLANNERS
HNTB

MADE BY: ZSS DATE: APR 94
DRAWN BY: MJG DATE: APR 94
CHECKED BY: JPR DATE: APR 94
SCALE: NO SCALE
DSPMSD01

MISCELLANEOUS DETAILS

FHWA REGION	STATE	PROJECT	
5	OHIO		

64A / 412

CUYAHOGA COUNTY
CUY-6-14.99

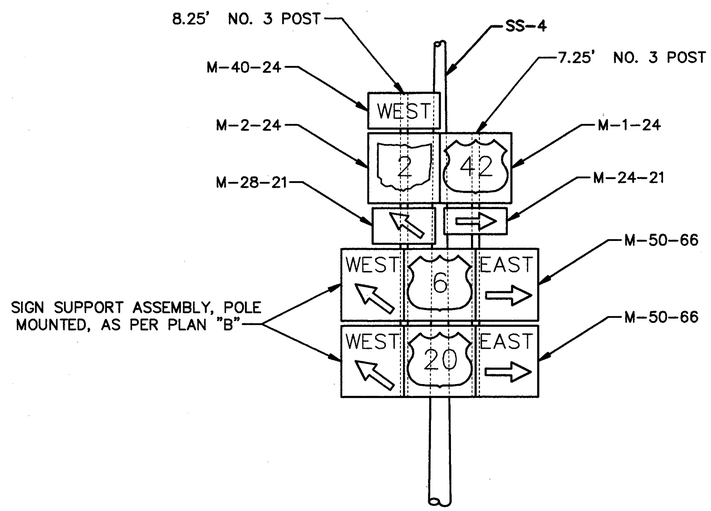

(40)

STATION 100+88

SEE SHEET 55

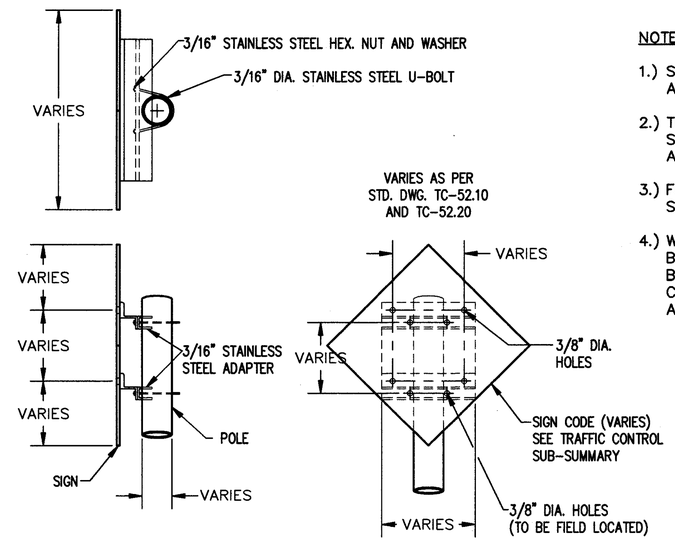

ITEM 630-SIGN SUPPORT ASSEMBLY,

POLE MOUNTED, AS PER PLAN "B"

NOTES:

1.) SIGN SHOULD BE MOUNTED 7' ABOVE PAVEMENT SURFACE.

2.) THE POLE DIAMETER AT SIGN LOCATION SHOULD BE APPROXIMATELY 8.5".

3.) FOR DETAIL NOT SHOWN, SEE STD. CONST. DWG. TC-22.20.

4.) WHERE SIGN ATTACHES TO ZEE BAR, BOLT HOLE LOCATIONS SHALL BE IN ACCORDANCE WITH STANDARD CONSTRUCTION DRAWING TC-52.10 AND TC-52.20.

HOWARD NEEDLES TAMMEN & BERGENDOFF
ARCHITECTS ENGINEERS PLANNERS
HNTB

MADE BY: DAK DATE: APR 94
DRAWN BY: LML DATE: APR 94
CHECKED BY: JPR DATE: APR 94
SCALE: NONE
DSPMSD02

TRAFFIC SIGNAL SUBSUMMARY

FHWA REGION	STATE	PROJECT	
5	OHIO		

65
412

CUYAHOGA COUNTY
CUY-6-14.99

SHEET NO.	INTERSECTION	625						632													
		CONDUIT, 2", 713.07	CONDUIT, 3", 713.04	TRENCH	TRENCH IN PAVED AREA, TYPE B	PULL BOX, MISC.: POLYMER CONCRETE	GROUND ROD	VEHICULAR SIGNAL HEAD, 3 SECTION, 12" LENS, 1-WAY, AS PER PLAN	VEHICULAR SIGNAL HEAD, 4 SECTION, 12" LENS, 1-WAY, AS PER PLAN	VEHICULAR SIGNAL HEAD, 5 SECTION, 12" LENS, 1-WAY, AS PER PLAN	PEDESTRIAN SIGNAL HEAD, TYPE D2, AS PER PLAN	PEDESTRIAN PUSHBUTTON	LOOP DETECTOR UNIT, AS PER PLAN	LOOP DETECTOR UNIT, DELAY AND EXTENSION TYPE, AS PER PLAN	LOOP DETECTOR PAVEMENT CUTTING	SIGNAL CABLE, 2 CONDUCTOR, NO. 14 AWG	SIGNAL CABLE, 5 CONDUCTOR, NO. 14 AWG	SIGNAL CABLE, 7 CONDUCTOR, NO. 14 AWG	PHONE DROP		
		L.F.	L.F.	L.F.	L.F.	EACH	EACH	EACH	EACH	EACH	EACH	EACH	EACH	EACH	L.F.	L.F.	L.F.	L.F.	EACH		
66	W 25TH/DETROIT	818	1333	1154	325	22	12	14	–	3	12	6	6	12	1327	1040	2223	1967	1		
69	W 9TH/HURON/SUPERIOR	162	842	244	363	11	8	8	1	2	10	5	6	7	947	699	1535	1054	–		
	TOTALS:	980	2175	1398	688	33	20	22	1	5	22	11	12	19	2274	1739	3758	3021	1		

SHEET NO.	INTERSECTION	632															633				
		LOOP DETECTOR WIRE, TYPE E	LOOP DETECTOR LEAD-IN CABLE	POWER CABLE, 3 CONDUCTOR, NO. 6 AWG	COMBINATION SIGNAL SUPPORT, TYPE TC-81.20, DESIGN 12, 45' ARM, AS PER PLAN	CONDUIT RISER, 2" DIAMETER	CONCRETE FOR ANCHOR BASE FOUNDATION	SIGNAL SUPPORT, TYPE TC-81.20, DESIGN 3, 35' ARM, AS PER PLAN	SIGNAL SUPPORT, TYPE TC-81.20, DESIGN 12, 45' ARM, AS PER PLAN	COMBINATION SIGNAL SUPPORT, TYPE TC-81.20, DESIGN 4, 32' ARM, AS PER PLAN	COMBINATION SIGNAL SUPPORT, TYPE TC-81.20, DESIGN 4, 38' ARM, AS PER PLAN	COMBINATION SIGNAL SUPPORT, TYPE TC-81.20, DESIGN 11, 45' ARM, AS PER PLAN	COMBINATION SIGNAL SUPPORT, TYPE TC-81.20, DESIGN 12, 48' ARM, AS PER PLAN	STRAIN POLE, TYPE TC-81.10 DESIGN 1,13, AS PER PLAN	PEDESTAL, 8', TRANSFORMER BASE, AS PER PLAN	REMOVAL OF TRAFFIC SIGNAL INSTALLATION	CONTROLLER, ACTUATED, 8 PHASE, SOLID STATE DIGITAL MICROPROCESSOR, AS PER PLAN	CONTROLLER, MASTER, TRAFFIC RESPONSIVE, AS PER PLAN	CONCRETE FOR CABINET FOUNDATION	CONTROLLER WORK PAD	
		L.F.	L.F.	L.F.	EACH	EACH	CU. YD.	EACH	EACH	EACH	EACH	EACH	EACH	EACH	EACH	EACH	EACH	EACH	CU. YD.	SQ. FT.	
66	W 25TH/DETROIT	2442	4977	151	–	2	14.31	1	–	1	2	1	2	–	4	1	1	1	1.85	10.42	
69	W 9TH/HURON/SUPERIOR	1745	2329	116	1	–	10.83	–	1	–	–	–	1	1	3	1	1	–	1.85	–	
	TOTALS:	4187	7306	267	1	2	25.2	1	1	1	2	1	3	1	7	2	2	1	3.7	11	

HOWARD NEEDLES TAMMEN & BERGENDOFF
ARCHITECTS ENGINEERS PLANNERS
HNTB

MADE BY: JPR DATE: APR 94
DRAWN BY: DJF DATE: APR 94
CHECKED BY: DAK DATE: APR 94
SCALE: NONE
DSSIG001

SIGNAL PLAN

FHWA REGION	STATE	PROJECT	
5	OHIO		

66/412

CUYAHOGA COUNTY
CUY-6-14.99

LEGEND

- PROPOSED SIGNAL
- EXISTING SIGNAL
- MAST ARM
- PEDESTRIAN SIGNAL ON PEDESTAL W/ PUSHBUTTON
- CONDUIT
- SIGN
- CURB RAMP
- PULL BOX
- *EXISTING PULL BOX*

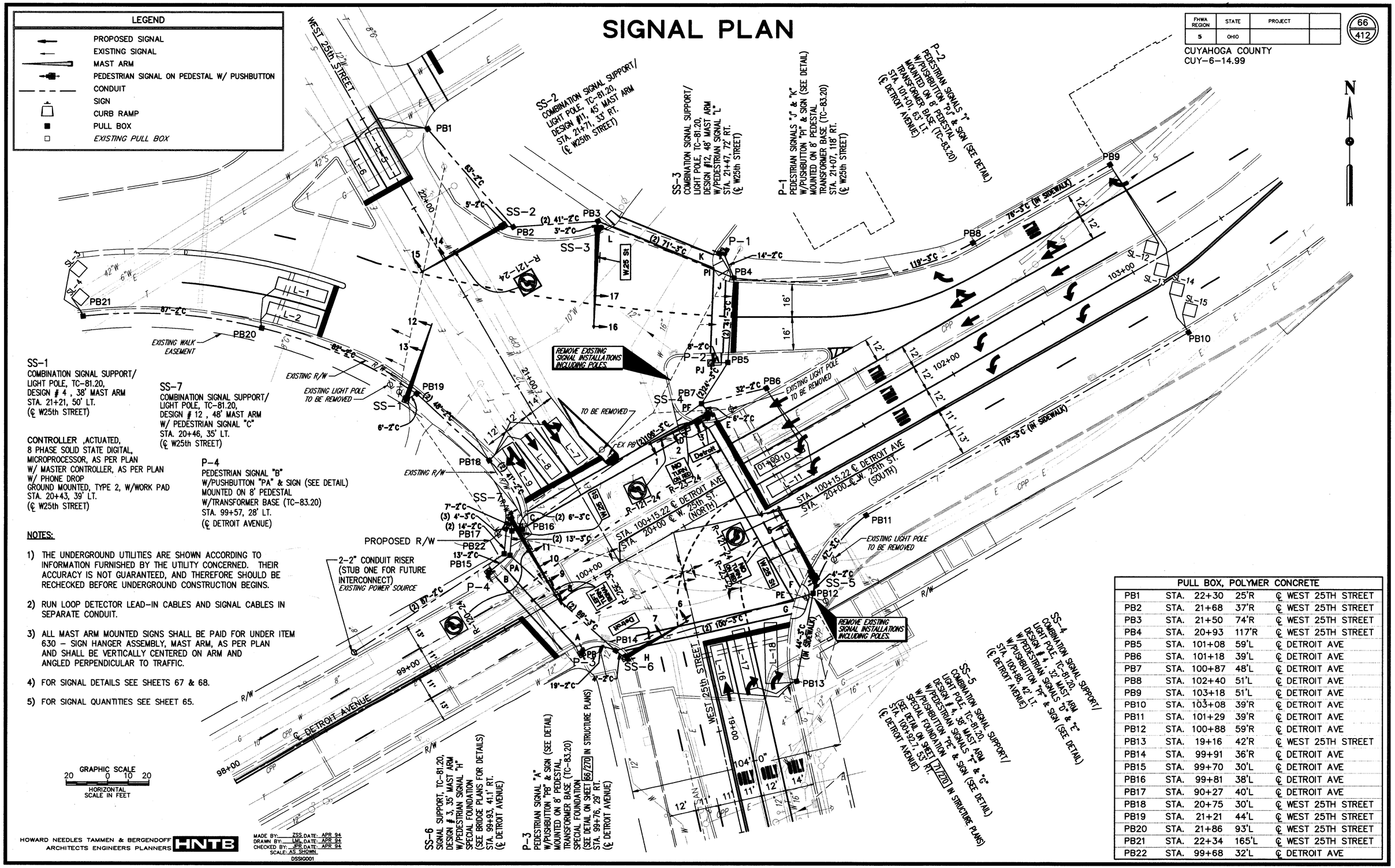

SS-1
COMBINATION SIGNAL SUPPORT/ LIGHT POLE, TC-81.20, DESIGN # 4 , 38' MAST ARM STA. 21+21, 50' LT. (℄ W25th STREET)

SS-7
COMBINATION SIGNAL SUPPORT/ LIGHT POLE, TC-81.20, DESIGN # 12 , 48' MAST ARM W/ PEDESTRIAN SIGNAL "C" STA. 20+46, 35' LT. (℄ W25th STREET)

CONTROLLER ,ACTUATED, 8 PHASE SOLID STATE DIGITAL, MICROPROCESSOR, AS PER PLAN W/ MASTER CONTROLLER, AS PER PLAN W/ PHONE DROP GROUND MOUNTED, TYPE 2, W/WORK PAD STA. 20+43, 39' LT. (℄ W25th STREET)

P-4
PEDESTRIAN SIGNAL "B" W/PUSHBUTTON "PA" & SIGN (SEE DETAIL) MOUNTED ON 8' PEDESTAL W/TRANSFORMER BASE (TC-83.20) STA. 99+57, 28' LT. (℄ DETROIT AVENUE)

NOTES:

1) THE UNDERGROUND UTILITIES ARE SHOWN ACCORDING TO INFORMATION FURNISHED BY THE UTILITY CONCERNED. THEIR ACCURACY IS NOT GUARANTEED, AND THEREFORE SHOULD BE RECHECKED BEFORE UNDERGROUND CONSTRUCTION BEGINS.

2) RUN LOOP DETECTOR LEAD-IN CABLES AND SIGNAL CABLES IN SEPARATE CONDUIT.

3) ALL MAST ARM MOUNTED SIGNS SHALL BE PAID FOR UNDER ITEM 630 - SIGN HANGER ASSEMBLY, MAST ARM, AS PER PLAN AND SHALL BE VERTICALLY CENTERED ON ARM AND ANGLED PERPENDICULAR TO TRAFFIC.

4) FOR SIGNAL DETAILS SEE SHEETS 67 & 68.

5) FOR SIGNAL QUANTITIES SEE SHEET 65.

GRAPHIC SCALE
20 0 10 20
HORIZONTAL SCALE IN FEET

SS-6
SIGNAL SUPPORT, TC-81.20, DESIGN # 3, 35' MAST ARM W/PEDESTRIAN SIGNAL "H" SPECIAL FOUNDATION (SEE BRIDGE PLANS FOR DETAILS) STA. 99+93, 41.1' RT. (℄ DETROIT AVENUE)

P-3
PEDESTRIAN SIGNAL "A" W/PUSHBUTTON "PB" & SIGN (SEE DETAIL) MOUNTED ON 8' PEDESTAL TRANSFORMER BASE (TC-83.20) SPECIAL FOUNDATION (SEE DETAIL ON SHEET 66/270) IN STRUCTURE PLANS) STA. 99+76, 29' RT. (℄ DETROIT AVENUE)

SS-4
COMBINATION SIGNAL SUPPORT/ LIGHT POLE, TC-81.20, DESIGN # 1 , 32' MAST ARM W/PEDESTRIAN SIGNALS "D" & "E" W/PUSHBUTTON "PE" & SIGN (SEE DETAIL) STA. 100+88, 42' LT. (℄ DETROIT AVENUE)

SS-5
COMBINATION SIGNAL SUPPORT/ LIGHT POLE, TC-81.20, DESIGN # 4, 38' MAST ARM W/PEDESTRIAN SIGNALS "F" & "G" W/PUSHBUTTON "PE" & SIGN (SEE DETAIL) SPECIAL FOUNDATION (SEE DETAIL ON SHEET 71/270) IN STRUCTURE PLANS) STA. 100+92, 53' RT. (℄ DETROIT AVENUE)

PULL BOX, POLYMER CONCRETE			
PB1	STA. 22+30	25'R	℄ WEST 25TH STREET
PB2	STA. 21+68	37'R	℄ WEST 25TH STREET
PB3	STA. 21+50	74'R	℄ WEST 25TH STREET
PB4	STA. 20+93	117'R	℄ WEST 25TH STREET
PB5	STA. 101+08	59'L	℄ DETROIT AVE
PB6	STA. 101+18	39'L	℄ DETROIT AVE
PB7	STA. 100+87	48'L	℄ DETROIT AVE
PB8	STA. 102+40	51'L	℄ DETROIT AVE
PB9	STA. 103+18	51'L	℄ DETROIT AVE
PB10	STA. 103+08	39'R	℄ DETROIT AVE
PB11	STA. 101+29	39'R	℄ DETROIT AVE
PB12	STA. 100+88	59'R	℄ DETROIT AVE
PB13	STA. 19+16	42'R	℄ WEST 25TH STREET
PB14	STA. 99+91	36'R	℄ DETROIT AVE
PB15	STA. 99+70	30'L	℄ DETROIT AVE
PB16	STA. 99+81	38'L	℄ DETROIT AVE
PB17	STA. 90+27	40'L	℄ DETROIT AVE
PB18	STA. 20+75	30'L	℄ WEST 25TH STREET
PB19	STA. 21+21	44'L	℄ WEST 25TH STREET
PB20	STA. 21+86	93'L	℄ WEST 25TH STREET
PB21	STA. 22+34	165'L	℄ WEST 25TH STREET
PB22	STA. 99+68	32'L	℄ DETROIT AVE

HOWARD NEEDLES TAMMEN & BERGENDOFF
ARCHITECTS ENGINEERS PLANNERS HNTB

MADE BY: ZSS DATE: APR 94
DRAWN BY: LML DATE: APR 94
CHECKED BY: JPR DATE: APR 94
SCALE: AS SHOWN
DSSIG001

SIGNAL PLAN W. 25th ST & DETROIT AVE

SIGNAL DETAILS

FHWA REGION	STATE	PROJECT	
5	OHIO		

67 / 412

CUYAHOGA COUNTY
CUY-6-14.99

TRAFFIC SIGNAL TIMING AND DISPLAY ACTUATED CONTROLLERS

6 – ϕ SEMI – ACTUATED

START IN: FLASH ○ 8 SEC.
ALL RED ●
FIRST PHASES: 2 & 6 COLOR DISPLAYED:
GREEN ● YELLOW ○

DETROIT/SUPERIOR & W. 25th ST.

ϕ2 and ϕ6 have the same timing as shown below.
ϕ4 and ϕ8 have the same timing as shown below.

		ϕ1	ϕ2 & ϕ6	ϕ4 & ϕ8	ϕ7
INITIAL (MINIMUM)	AM	7		7	7
	AVG	7		7	7
	PM	7		7	5
WALK	AM		6	6	
	AVG		6	6	
	PM		6	6	
EXTENSION (PRESET & MINIMUM)		2		2	2.5
PEDESTRIAN CLEARANCE (FDW)			19	22	
MAXIMUM	AM	8	25	24 28	16 19
	AVG	8	25	24 28	16 19
	PM	19	25	24 28	5 8
YELLOW		3	3	3	3
ALL RED		2	2	2	2

INTERVAL COLORS

STREET	DIRECTION	SIGNAL	LENS	OVERWALK FLASH	PRE-EMPT	ϕ1 & ϕ6 1	2	3	4	ϕ2 & ϕ6 5	6	7	8	ϕ4 & ϕ8 9	10	11	12	13	ϕ4 & ϕ8 14	15	16	ϕ7 17	18
DETROIT AVE.	WB	8,9	R	R					R	R	R	R	R	R	R	R	R	R	R	R	R	R	R
			Y					Y															
			⊖			⊖	⊖																
		10,11	R	R										R	R	R	R	R	R	R	R	R	R
			Y									Y											
			₵			₵	₵	₵	₵	₵	₵												
	WB TO RAMP	16,17	R	R										R	R	R	R	R	R	R	R	R	R
			Y									Y											
			G			G	G	G	G	G	G												
	EB	4,5	R	R		R	R	R	R					R	R	R	R	R	R	R	R	R	R
			Y									Y											
			G							G	G												
SOUTH CROSSWALK	EB	G	DW			DW	DW	DW	DW	FDW	DW	DW	DW	DW	DW	DW	DW	DW	DW	DW	DW	DW	DW
	WB	H	W							W													
NORTH & NORTHEAST CROSSWALKS	EB	D,K	DW																				
	WB	C,L	W			W	W	W	W	W													
W. 25th ST.	SB	6	R	R		R	R	R	R	R	R	R	R					⊖					R
			Y																			Y	
			G											G	G	G	G	G	G	G	G		
			⊖															⊖	⊖	⊖	⊖		
		7	R	R		R	R	R	R	R	R	R	R					⊖					R
			Y																			Y	
			G											G	G	G	G	G	G	G	G		
		14,15	R	R		R	R	R	R	R	R	R	R				R	R	R	R	R	R	R
			Y													Y							
			G											G	G								
	NB	1	R	R		R	R	R	R	R	R	R	R				R	R	R	R	R	R	R
			Y													Y							
			₵											₵	₵								
		2,3	R	R		R	R	R	R	R	R	R	R				R	R	R	R	R	R	R
			Y													Y							
			G											G	G								
			⊖			⊖	⊖																
RAMP	SEB	12,13	R	R		R	R	R	R	R	R	R	R	R	R	R	R	R				R	R
			Y																		Y		
			G																G	G			
EAST & WEST CROSSWALKS	NB	B,E,J	DW			DW	DW	DW	DW	DW	DW	DW	DW		FDW	DW	DW	DW	DW	DW	DW	DW	DW
	SB	A,F,I	W											W									

C/L = 100 SEC. (AM) / 100 SEC. (AVG) / 100 SEC. (PM)	RECALL	ϕ1 & ϕ6	ϕ2 & ϕ6	ϕ4 & ϕ8	ϕ4 & ϕ7
	VEH/MEM/OFF	■	□	■	■
	VEH/MEM/ON	□	□	□	□
	VEH/MIN	□	□	□	□
	VEH/MAX	□	■	□	□
	PED/RECALL	□	■	□	□
	NON-ACT	□	■	□	□

Notes:
⊖If ø7 "skipped", intervals 12 & 13 will clear to yellow then red.
– when ø2 is "ON", omit ø1

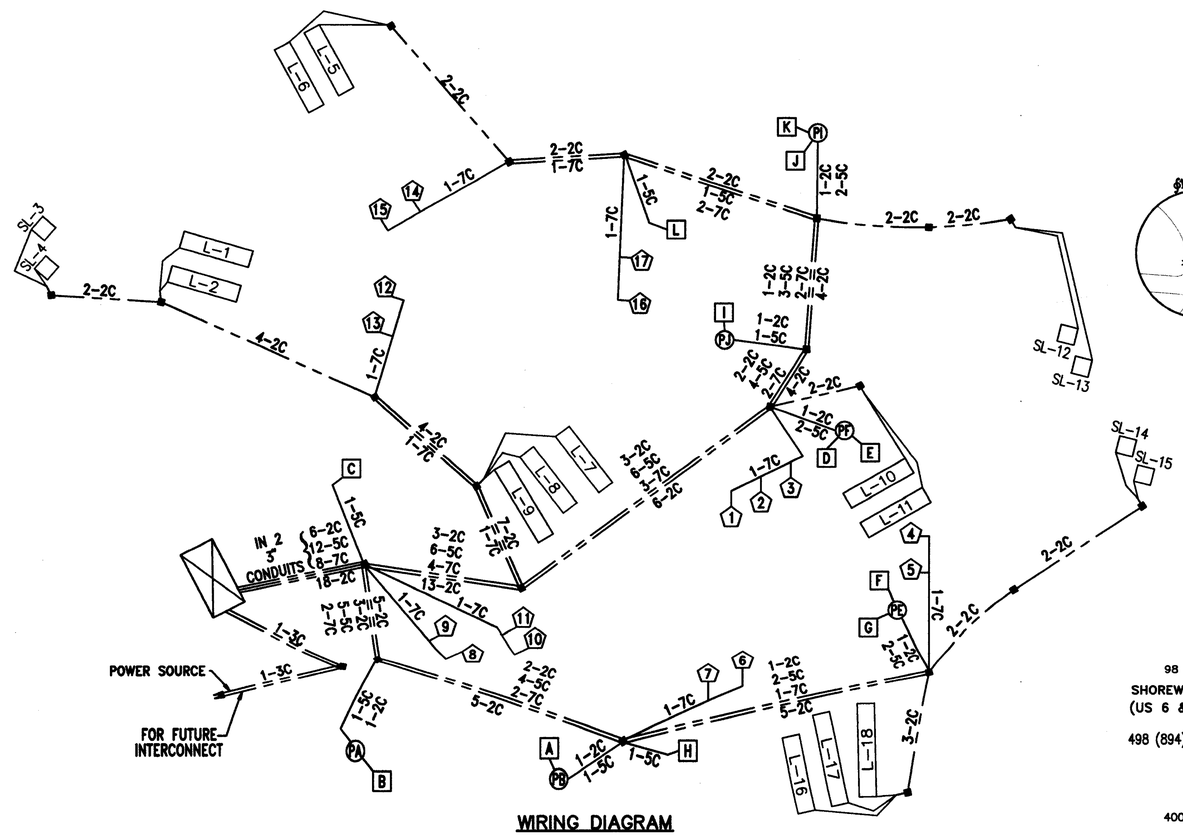

WIRING DIAGRAM

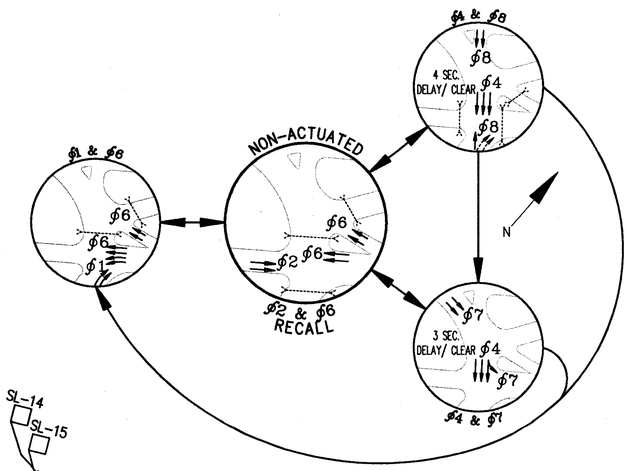

PHASE SEQUENCE DIAGRAM

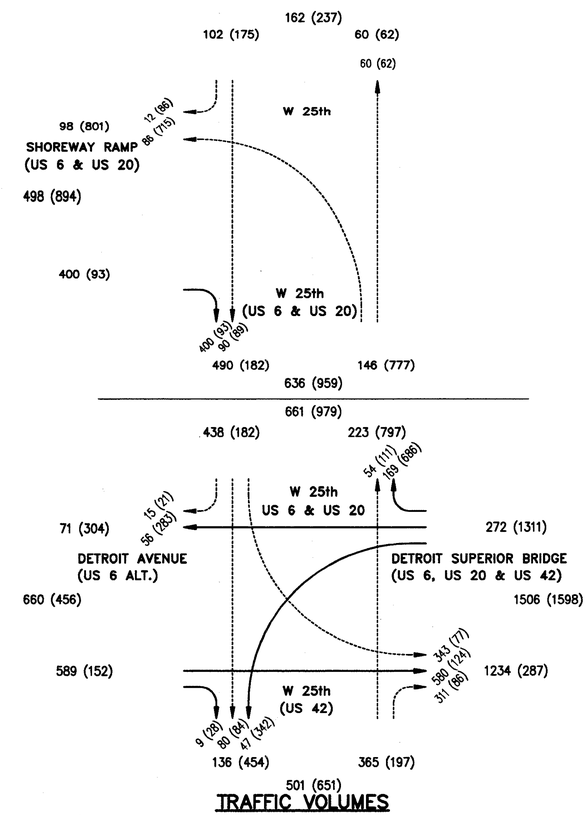

TRAFFIC VOLUMES

XXX – 1992 AM PEAK HOUR
(XXX) – 1992 PM PEAK HOUR

LOOP	# TURNS	STATION	OFFSET	SIZE	HOOK-UP	CALL/DELAY/EXTEND	TYPE	REMARKS	DELAY INHIBIT
L-1	2	21+83	58'LT	6'x25'	ϕ7	CALL/EXTEND	PRESENCE	NONLOCK	–
L-2	2	21+75	68'LT	6'x25'	ϕ7	CALL/EXTEND	PRESENCE	NONLOCK	–
L-5	2	22+18	0	6'x25'	ϕ8	CALL/EXTEND	PRESENCE	NONLOCK	–
L-6	2	22+18	12'LT	6'x25'	ϕ8	CALL/EXTEND	PRESENCE	NONLOCK	–
L-7	2	20+52	9'RT	6'x25'	ϕ4	CALL/EXTEND	PRESENCE	NONLOCK	–
L-8	2	20+52	6'LT	6'x25'	ϕ4	CALL/EXTEND	PRESENCE	NONLOCK	–
L-9	2	20+47	18'LT	6'x30'	ϕ4	CALL/EXTEND	PRESENCE	NONLOCK	–
L-10	2	100+94	6'LT	6'x25'	ϕ1	CALL/EXTEND	PRESENCE	NONLOCK	–
L-11	2	100+94	6'RT	6'x25'	ϕ1	CALL/2 SEC DELAY/EXTEND	PRESENCE	NONLOCK	OFF
L-16	2	19+42	8'RT	6'x25'	ϕ8	CALL/2 SEC DELAY/EXTEND	PRESENCE	NONLOCK	OFF
L-17	2	19+47	20'RT	6'x30'	ϕ8	CALL/EXTEND	PRESENCE	NONLOCK	–
L-18	2	19+47	36'RT	6'x30'	ϕ8	CALL/EXTEND	PRESENCE	NONLOCK	–
SL-3	3	22+53	152'LT	6'x6'	–	–	PULSE	NONLOCK, SYSTEM	–
SL-4	3	22+41	158'LT	6'x6'	–	–	PULSE	NONLOCK, SYSTEM	–
SL-12	3	103+18	6'LT	6'x6'	–	–	PULSE	NONLOCK, SYSTEM	–
SL-13	3	103+18	6'RT	6'x6'	–	–	PULSE	NONLOCK, SYSTEM	–
SL-14	3	103+18	18'RT	6'x6'	–	–	PULSE	NONLOCK, SYSTEM	–
SL-15	3	103+18	30'RT	6'x6'	–	–	PULSE	NONLOCK, SYSTEM	–

LOOP DETECTOR CHART

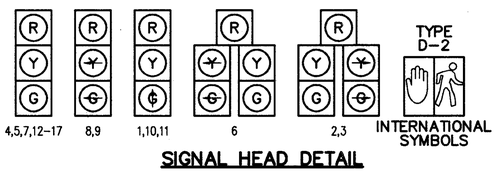

SIGNAL HEAD DETAIL

12" LENSES
POLYCARBONATE HEADS
RIGID MOUNTED
ALL SIGNAL HEADS SHALL HAVE TUNNEL VISORS

PEDESTRIAN PUSHBUTTON SIGN DETAIL R–73A–12

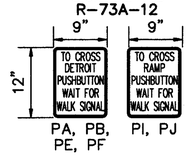

PA, PB, PE, PF — QTY = 4

PI, PJ — QTY = 2

HOWARD NEEDLES TAMMEN & BERGENDOFF
ARCHITECTS ENGINEERS PLANNERS
HNTB

MADE BY: JPR DATE: APR 94
DRAWN BY: LML DATE: APR 94
CHECKED BY: ZSS DATE: APR 94
SCALE: NONE
DSSIGD01

SIGNAL DETAILS W 25th ST & DETROIT AVE

SIGNAL DETAILS

FHWA REGION	STATE	PROJECT	
5	OHIO		

68
412

CUYAHOGA COUNTY
CUY-6-14.99

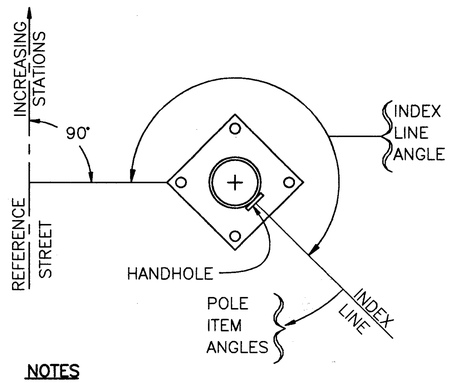

NOTES
1. ALL ANGLES MEASURED CLOCKWISE
2. INDEX LINE GOES THROUGH THE CENTER OF THE HANDHOLE

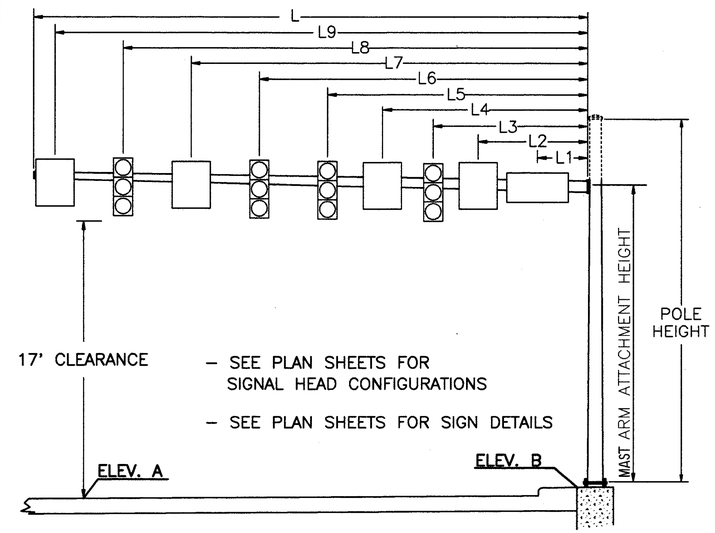

SIGNAL SUPPORT TYPE TC-81.20
NO SCALE

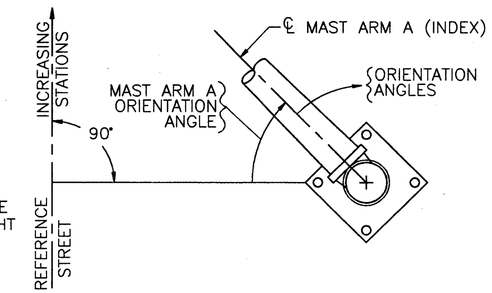

NOTES:
1. ALL ANGLES MEASURED CLOCKWISE
2. BASE PLATE IS ORIENTED SQUARE TO MAST ARM A (LARGEST ARM) EVEN IF SUPPORT HAS TWO MAST ARMS.

MAST ARM ANGLE DETAIL
NO SCALE

PEDESTAL WITH TRANSFORMER BASE TC-83.20

FROM SHEET NO.	REFERENCE STREET	STATION & OFFSET	POLE NO.	POLE HEIGHT (FT.)	FOUNDATION ELEVATION	INDEX LINE ANGLE (DEG.)	ANGLES (DEG.) FROM INDEX LINE: PEDESTRIAN SIGNAL 1	PEDESTRIAN SIGNAL 2	PEDESTRIAN PUSHBUTTON W/ SIGN
66	W. 25TH	21+07, 118'R	P-1	8	668.0	270°	45°	225°	50°
66	DETROIT	101+01, 63'L	P-2	8	669.2	315°	180°	–	180°
66	DETROIT	99+76, 28'R	P-3	8	669.5	180°	90°	–	90°
66	DETROIT	99+57, 28'L	P-4	8	669.4	0°	90°	–	90°

SIGNAL SUPPORT TYPE TC-81.20

	FROM SHEET	REFERENCE STREET	SUPPORT NO.	POLE DESIGN NO.	POLE HEIGHT (FT)	MAST ARM ATTACHMENT HEIGHT (FT.)	L (FT)	L1 (FT)	L2 (FT)	L3 (FT)	L4 (FT)	L5 (FT)	L6 (FT)	L7 (FT)	L8 (FT)	L9 (FT)	ELEVATION A	ELEVATION B	MAST ARM A ANGLE (DEG)	ANGLES (DEG.) FROM MAST ARM A: PEDESTRIAN SIGNAL 1	PEDESTRIAN SIGNAL 2	PUSHBUTTON	LUMINAIRE BRACKET	HAND HOLE
	66	WEST 25TH	SS-1	4	30	19.5	38	–	–	24	–	–	–	–	37	–	667.9	668.1	135°	–	–	–	0°	180°
	66	WEST 25TH	SS-2	11	30	19.5	45	–	27	31	–	44	–	–	–	–	668.0	668.2	0°	–	–	–	0°	180°
	66	WEST 25TH	SS-3	12	30	20.5	48	20	–	32	–	47	–	–	–	–	667.7	666.8	310°	200°	–	–	0°	180°
	66	DETROIT	SS-4	4	30	19.5	32	4	–	7	12	19	–	25	31	–	668.9	669.1	280°	80°	350°	0°	260°	90°
*	66	DETROIT	SS-5	4	30	19.5	38	15	23	28	33	37	–	–	–	–	669.4	669.9	0°	270°	180°	270°	0°	180°
*	66	DETROIT	SS-6	3	21	19.5	35	10	–	18	–	34	–	–	–	–	669.8	669.7	90°	105°	–	–	–	180°
	66	DETROIT	SS-7	12	30	20.5	48	7	15	19	–	27	35	38	43	46	669.6	669.4	180°	0°	–	–	0°	180°

* SPECIAL FOUNDATION DETAILS, SEE STRUCTURE PLANS, SHEET 71 / 270 AND 66 / 270 RESPECTIVELY.

HOWARD NEEDLES TAMMEN & BERGENDOFF
ARCHITECTS ENGINEERS PLANNERS
HNTB

MADE BY: JPR DATE: APR 94
DRAWN BY: LML DATE: APR 94
CHECKED BY: ZSS DATE: APR 94
SCALE: AS SHOWN
DSSIGD02

SIGNAL PLAN

FHWA REGION	STATE	PROJECT	
5	OHIO		

69
412

CUYAHOGA COUNTY
CUY-6-14.99

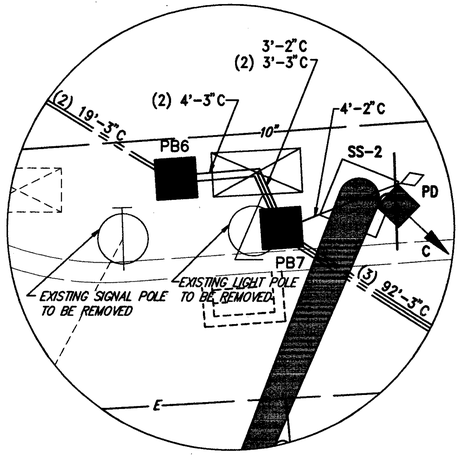

DETAIL – A

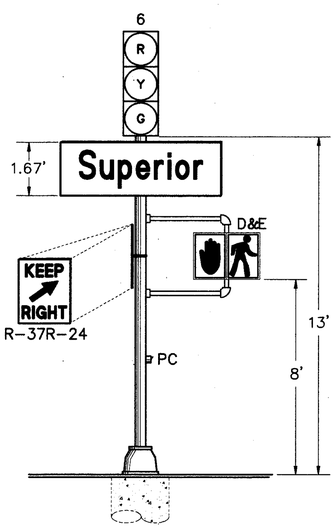

DETAIL SS-4
TC-81.10
DESIGN NO. 1, POLE HEIGHT 13'
N.T.S.

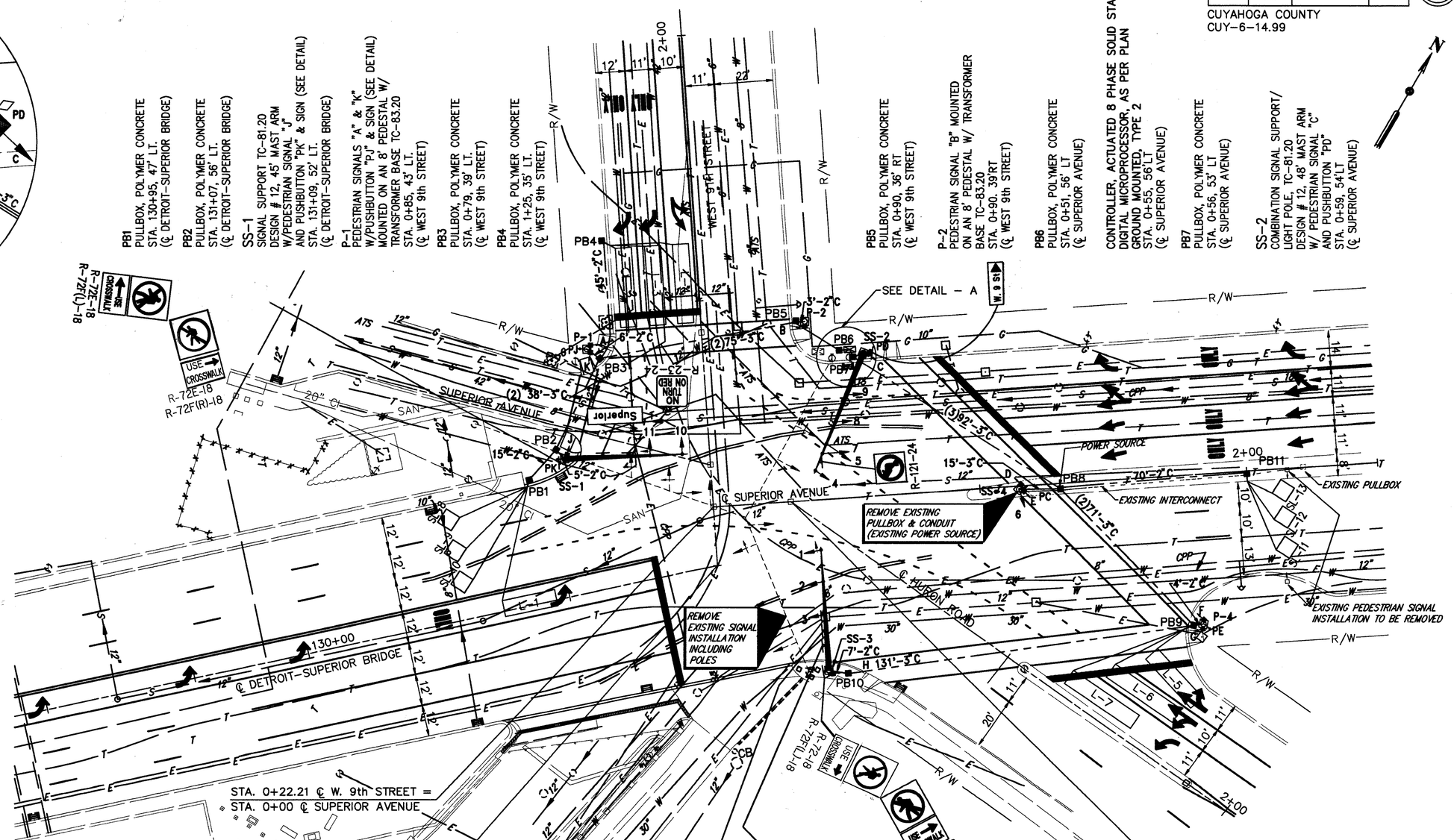

NOTES:

1) THE UNDERGROUND UTILITIES ARE SHOWN ACCORDING TO INFORMATION FURNISHED BY THE UTILITY CONCERNED. THEIR ACCURACY IS NOT GUARANTEED, AND THEREFORE SHOULD BE RECHECKED BEFORE UNDERGROUND CONSTRUCTION BEGINS.

2) RUN LOOP DETECTOR LEAD-IN CABLES AND SIGNAL CABLES IN SEPARATE CONDUIT.

3) ALL MAST ARM MOUNTED SIGNS SHALL BE PAID FOR UNDER ITEM 630 – SIGN HANGER ASSEMBLY, MAST ARM, AS PER PLAN AND SHALL BE VERTICALLY CENTERED ON ARM AND ANGLED PERPENDICULAR TO TRAFFIC. THE ENGINEER SHALL PROVIDE MOUNTING HARDWARE IF OTHER THAN MATERIALS SPECIFIED IN STD. DWG. TC-16.20

4) FOR LEGEND SEE SHEET 66.

5) FOR SIGNAL DETAILS SEE SHEETS 70 & 71.

6) FOR SIGNAL QUANTITIES SEE SHEET 65.

HOWARD NEEDLES TAMMEN & BERGENDOFF
ARCHITECTS ENGINEERS PLANNERS HNTB

MADE BY: JPR DATE: APR 94
DRAWN BY: LML DATE: APR 94
CHECKED BY: DAK DATE: APR 94
SCALE: AS SHOWN
DSSIG002

SIGNAL PLAN W. 9th ST./HURON RD./SUPERIOR AVE.

TRAFFIC SIGNAL DETAILS

FHWA REGION	STATE	PROJECT	
5	OHIO		

70 / 412

CUYAHOGA COUNTY
CUY-6-14.99

TRAFFIC SIGNAL TIMING AND DISPLAY ACTUATED CONTROLLERS

5 – ϕ SEMI – ACTUATED

START IN: FLASH ○ 8 SEC.
ALL RED ●
FIRST PHASE: 2 & 6 COLOR DISPLAYED:
GREEN ● YELLOW ○

SUPERIOR, W. 9th ST. & HURON — ϕ2 and ϕ6 have the same timing as shown below.

		ϕ5	ϕ2 & ϕ6	ϕ4	ϕ8
INITIAL (MINIMUM)	AM	6		10	7
	AVG	6		10	7
	PM	6		10	7
WALK	AM		4	5	10
	AVG		4 ϕ MINIMUM	5	10
	PM		4	5	10
EXTENSION (PRESET & MINIMUM)		3		3.5	3
PEDESTRIAN CLEARANCE (FDW)			25	29	7
MAXIMUM	AM	10	29	19	17
	AVG	10	29	19	17
	PM		33	23	23
YELLOW		3	3	3	3
ALL RED		1	2	2	2

INTERVAL COLORS

STREET	DIRECTION	SIGNAL	LENS	EMERGENCY FLASH	PRE-TIMPT	ϕ2 & ϕ5 1	2	3	4	ϕ2 & ϕ6 5	6	7	8	ϕ4 9	10	11	12	ϕ8 13	14	15	16
W. 9th ST.	SB	11	R	R		R	R	R	R	R	R	R	R	R	R	R	R				R
			Y																	Y	
			G															G	G		
			✳					✳													
			ϕ			ϕ	ϕ														
		10	R	R		R	R	R	R	R	R	R	R	R	R	R	R				R
			Y																	Y	
			G															G	G		
HURON RD.	NWB	5,6	R	R		R	R	R	R	R	R	R	R					R	R	R	R
			Y													Y					
			G											G	G						
		4	R	R		R	R	R	R	R	R	R	R					R	R	R	R
			Y													Y					
			G											G	G						
			ϕ											ϕ	ϕ						
EAST CROSSWALK	NB	C,E	DW			DW	DW	DW	DW	DW	DW	DW	DW					DW	DW	DW	DW
	SB	D,F	W											W							
NORTHWEST CROSSWALK	NB	K	DW			DW	DW	DW	DW	DW	DW	DW	DW	DW	DW	DW	DW			FDW	DW
	SB	J	W															W			
SUPERIOR AVE.	WB	7,8	R	R		R	R	R	R					R	R	R	R	R	R	R	R
		9	Y									Y									
			G							G	G										
	EB	1	R	R										R	R	R	R	R	R	R	R
			Y									Y									
			G			G	G	G	G	G	G										
			✳					✳													
			ϕ			ϕ	ϕ														
		2,3	R	R										R	R	R	R	R	R	R	R
			Y									Y									
			G			G	G	G	G	G	G										
NORTH & SOUTH CROSSWALK	WB	A,H	DW			DW	DW	DW	DW			FDW	DW	DW	DW	DW	DW	DW	DW	DW	DW
	EB	B,G	W							W											

C/L = 95 SEC. (AM)	RECALL	ϕ5 & ϕ6	ϕ2 & ϕ6	ϕ4	ϕ8
95 SEC. (AVG)	VEH/MEM/OFF	■	□	□	■
95 SEC. (PM)	VEH/MEM/ON	□	□	□	□
	VEH/MIN	□	□	□	□
	VEH/MAX	□	■	□	□
	PED/RECALL	□	■	□	□
	NON-ACT	□	■	□	□

A PEDESTRIAN CALL ON THE EAST CROSSWALK WILL CALL PHASES ϕ4 & ϕ8 BECAUSE BOTH PHASE TIMINGS ARE NECESSARY TO PROVIDE FOR THE WALK AND FLASHING DON'T WALK.
OMIT ϕ5 DURING PM PEAK (3:00PM TO 6:00PM)

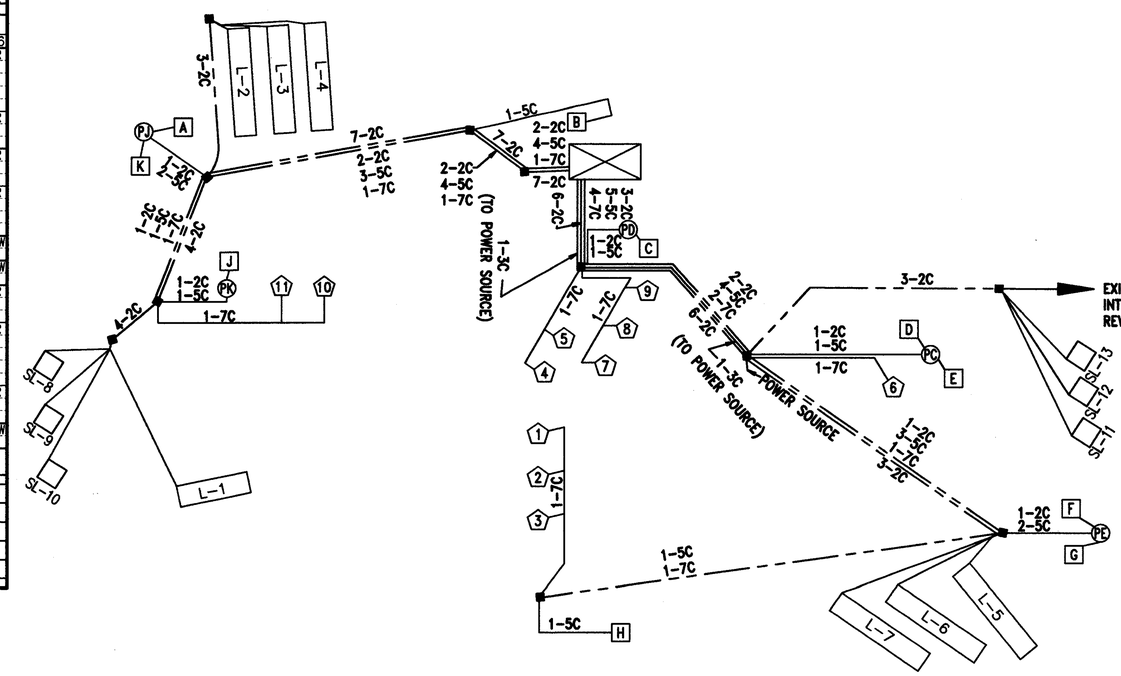

WIRING DIAGRAM

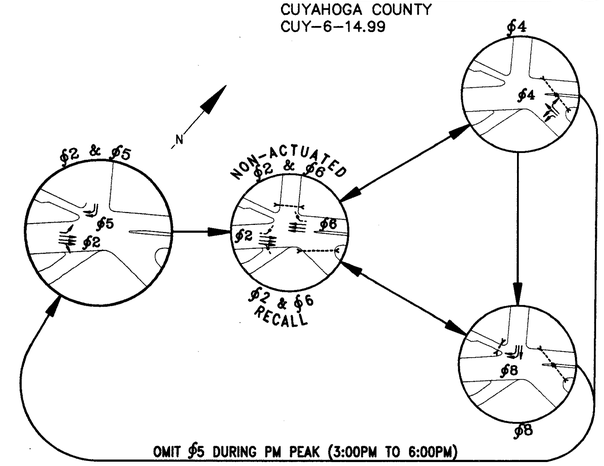

PHASE SEQUENCE DIAGRAM

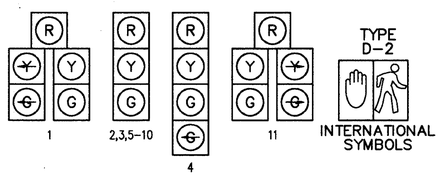

SIGNAL HEAD DETAIL

12" LENSES
POLYCARBONATE HEADS
RIGID MOUNTED
SIGNAL HEADS 1–9 SHALL HAVE TUNNEL VISORS

PEDESTRIAN PUSHBUTTON SIGN DETAIL R-73A-12

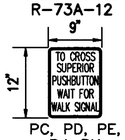

PC, PD, PE, PJ, PK

QTY = 5

LOOP	# TURNS	STATION	OFFSET	SIZE	HOOK-UP	CALL/DELAY/EXTEND	TYPE	REMARKS
L-1	2	130+95	℄	6'x20'	ϕ5	CALL/EXTEND	PRESENCE	NON-LOCK
L-2	2	0+92	24'LT	6'x30'	ϕ8	CALL/EXTEND	PRESENCE	NON-LOCK
L-3	2	0+92	12.5'LT	6'x30'	ϕ8	CALL/EXTEND	PRESENCE	NON-LOCK
L-4	2	0+92	2'LT	6'x30'	ϕ8	CALL/EXTEND	PRESENCE	NON-LOCK
L-5	2	1+46	5'LT	8'x25'	ϕ4	CALL/8 SEC. DELAY/EXTEND	PRESENCE	NON-LOCK
L-6	2	1+34	15'LT	6'x30'	ϕ4	CALL/EXTEND	PRESENCE	NON-LOCK
L-7	2	1+23	31'LT	6'x30'	ϕ4	CALL/EXTEND	PRESENCE	NON-LOCK
SL-8	3	130+66	38'LT	6'x6'	–	–	PULSE	NON-LOCK,SYSTEM
SL-9	3	130+66	26'LT	6'x6'	–	–	PULSE	NON-LOCK,SYSTEM
SL-10	3	130+66	14'LT	6'x6'	–	–	PULSE	NON-LOCK,SYSTEM
SL-11	3	2+09	30.5'RT	6'x6'	–	–	PULSE	NON-LOCK,SYSTEM
SL-12	3	2+09	19'RT	6'x6'	–	–	PULSE	NON-LOCK,SYSTEM
SL-13	3	2+09	9'RT	6'x6'	–	–	PULSE	NON-LOCK,SYSTEM

LOOP DETECTOR CHART

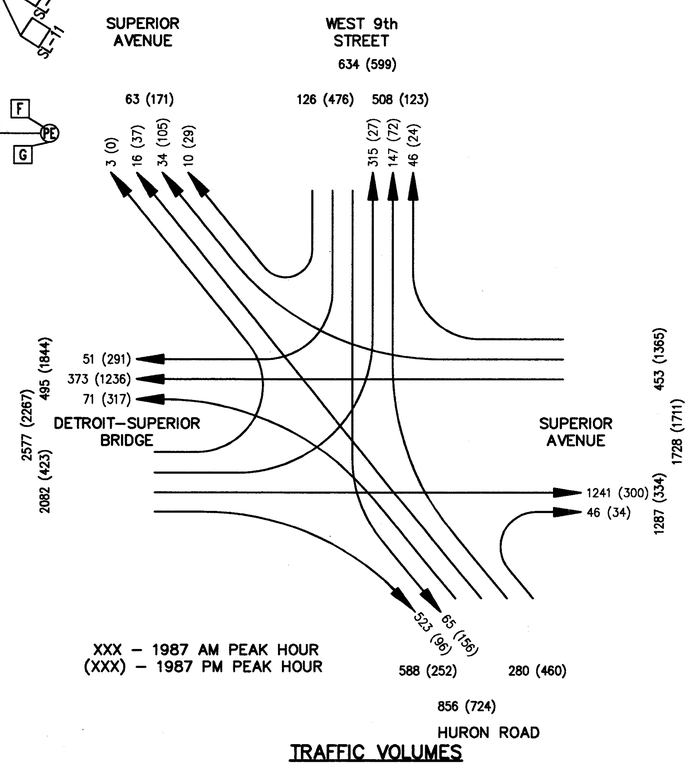

TRAFFIC VOLUMES

HOWARD NEEDLES TAMMEN & BERGENDOFF
ARCHITECTS ENGINEERS PLANNERS HNTB

MADE BY: DAK DATE: APR 94
DRAWN BY: LML DATE: APR 94
CHECKED BY: JPR DATE: APR 94
SCALE: AS SHOWN
DSSIGD03

SIGNAL DETAILS

FHWA REGION	STATE	PROJECT	
5	OHIO		

71
412

CUYAHOGA COUNTY
CUY-6-14.99

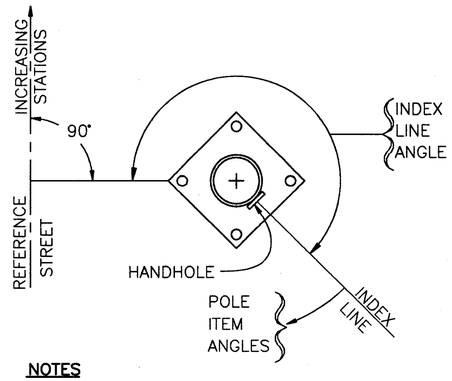

NOTES
1. ALL ANGLES MEASURED CLOCKWISE
2. INDEX LINE GOES THROUGH THE CENTER OF THE HANDHOLE

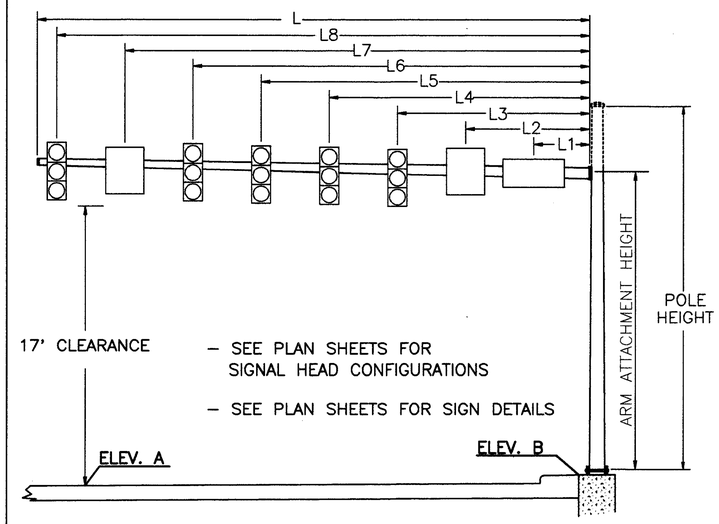

SIGNAL SUPPORT TYPE TC-81.20
NO SCALE

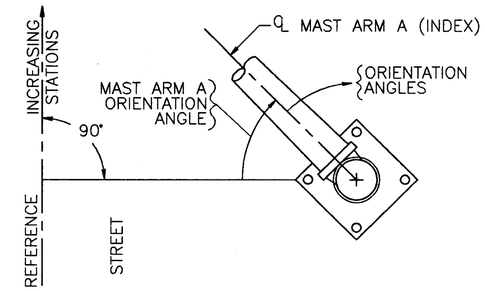

NOTES:
1. ALL ANGLES MEASURED CLOCKWISE
2. BASE PLATE IS ORIENTED SQUARE TO MAST ARM A (LARGEST ARM) EVEN IF SUPPORT HAS TWO MAST ARMS.

MAST ARM ANGLE DETAIL
NO SCALE

PEDESTAL WITH TRANSFORMER BASE TC-83.20

FROM SHEET NO.	REFERENCE STREET	STATION & OFFSET	POLE NO.	POLE DESIGN NO.	POLE HEIGHT (FT.)	FOUNDATION ELEVATION	INDEX LINE ANGLE (DEG.)	ANGLES (DEG.) FROM INDEX LINE: PEDESTRIAN SIGNAL 1	PEDESTRIAN SIGNAL 2	PEDESTRIAN PUSHBUTTON W/ SIGN	1 1/2" BLIND COUPLING.
69	W. 9TH	0+85, 43'L	P-1	–	8	645.0	0°	90°	180°	180°	
69	W. 9TH	0+90, 39'R	P-2	–	8	649.3	180°	90°	–	–	
69	SUPERIOR	1+80, 56'R	P-4	–	8	651.7	90°	90°	315°	135°	

STRAIN POLE TC-81.10

69	SUPERIOR	1+12, 2'R	SS-4	1	13	651.4	270°	45°	225°	180°	180°

SIGNAL SUPPORT TYPE TC-81.20

FROM SHEET	REFERENCE STREET	SUPPORT NO.	POLE DESIGN NO.	POLE HEIGHT (FT)	ARM ATTACHMENT HEIGHT (FT.)	L (FT)	L1 (FT)	L2 (FT)	L3 (FT)	L4 (FT)	L5 (FT)	L6 (FT)	L7 (FT)	L8 (FT)	ELEVATION A	ELEVATION B	MAST ARM A ANGLE (DEG)	ANGLES (DEG.) FROM MAST ARM A: PEDESTRIAN SIGNAL 1	PEDESTRIAN SIGNAL 2	PUSHBUTTON	LUMINAIRE BRACKET	HAND HOLE
69	SUPERIOR	SS-1	12	23	21.5	45	12	27	32	44	–	–	–	–	647.5	646.1	100°	195°	–	200°	–	180°
69	SUPERIOR	SS-2	12	30	19.5	48	0	–	16	28	36	40	43	47	648.8	649.5	205°	205°	–	205°	335°	155°
69	SUPERIOR	SS-3	12	30	20.5	45	8	16	20	32	44	–	–	–	648.9	648.4	0°	175°	–	–	0°	180°

HOWARD NEEDLES TAMMEN & BERGENDOFF
ARCHITECTS ENGINEERS PLANNERS
HNTB

MADE BY: JPR DATE: APR 94
DRAWN BY: LML DATE: APR 94
CHECKED BY: ZSS DATE: APR 94
SCALE: AS SHOWN
DSSIG004

TYPICAL FLEXIBLE PAVEMENT REPAIR AT PROPOSED LOOP DETECTORS

FHWA REGION	STATE	PROJECT	
5	OHIO		

72
412

CUYAHOGA COUNTY
CUY-6-14.99

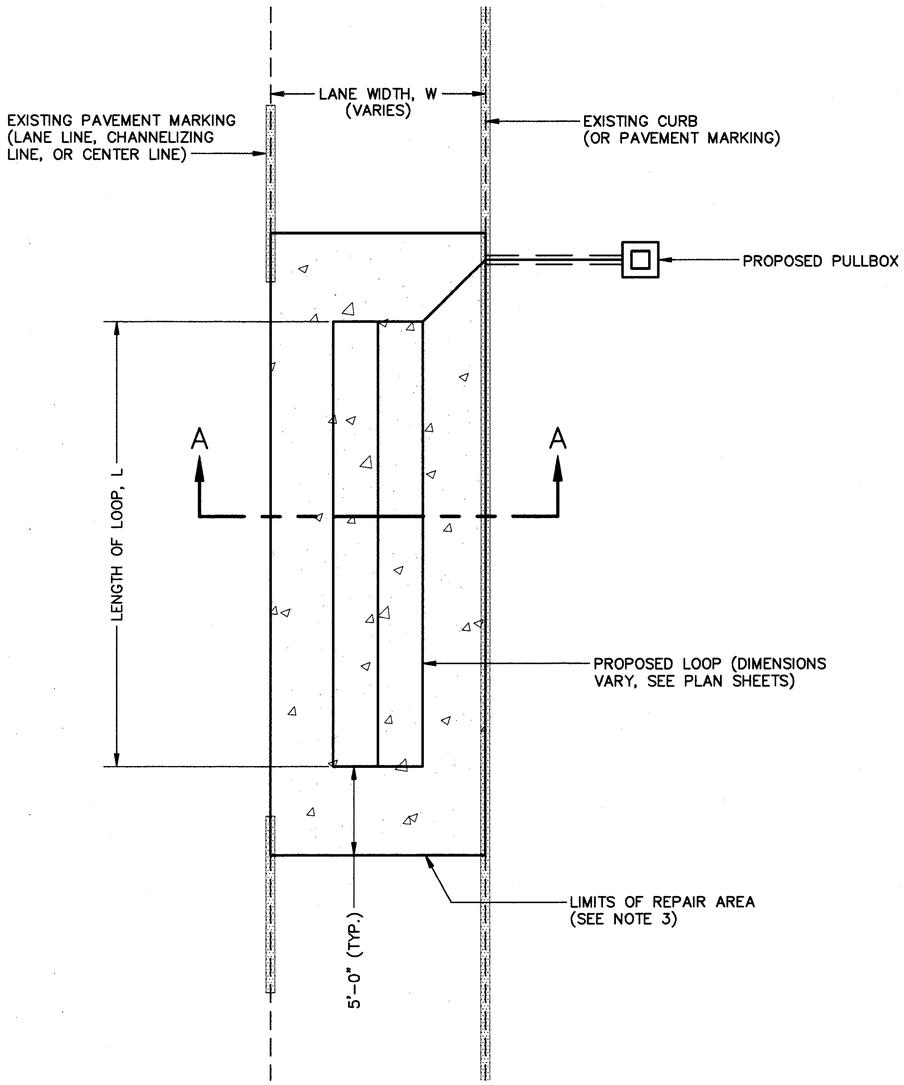

PLAN VIEW

GRAPHIC SCALE
4 0 2 4
SCALE IN FEET

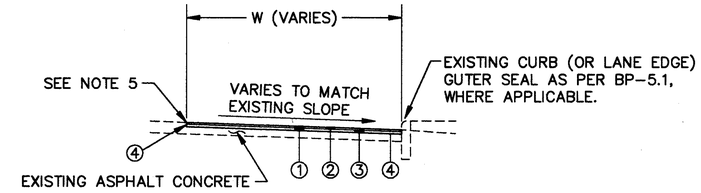

SECTION A–A

① ITEM 253 – PAVEMENT REPAIR (3" MINIMUM DEPTH **)

② ITEM 404 – 1 1/4" ASPHALT CONCRETE, AC-20

③ ITEM 402 – 1 3/4" ASPHALT CONCRETE, AC-20 **

④ ITEM 407 – TACK COAT

** – THIS THICKNESS MAY BE INCREASED TO MEET THE TOP OF THE EXISTING RIGID BASE, AS DIRECTED BY THE ENGINEER.

GRAPHIC SCALE
4 0 2 4
SCALE IN FEET

NOTES:

1) THIS DETAIL IS INTENDED FOR USE ON PAVEMENTS WITH ASPHALT (FLEXIBLE) WEARING SURFACES WHICH EXHIBIT SEVERE SURFACE DISTRESS, SUCH AS "ALLIGATOR CRACKING", "RAVELLING" OR "RUTTING".

2) THE ENGINEER SHALL DETERMINE WHICH EXISTING ASPHALT PAVEMENT SURFACES ARE UNSUITABLE FOR LOOP DETECTOR PLACEMENT. ALL PAVEMENT REPAIR LOCATIONS SHALL BE AS DIRECTED BY THE ENGINEER.

3) THE DIMENSIONS OF THE REPAIR AREA SHALL BE AS FOLLOWS:
W x (L+10 FT); WHERE
W = LANE WIDTH
L = LENGTH OF PROPOSED LOOP

4) ALL REPAIRS SHALL BE PERFORMED DURING THE HOURS OF 9:00 AM TO 3:00 PM. REPAIR AREAS SHALL BE COMPLETED PRIOR TO OPENING THE LANE TO TRAFFIC. ALL LANES SHALL BE OPEN TO TRAFFIC AT THE END OF EACH WORK DAY.

5) THE CONTRACTOR SHALL PROVIDE A NEAT VERTICAL EDGE ALONG ALL EDGES OF THE REPAIR AREA AS PER 253.02.

6) THE CONTRACTOR SHALL REPLACE ALL PAVEMENT MARKINGS DISTURBED BY THE REPAIR AREA(S). SEE THIS SHEET FOR ESTIMATED QUANTITIES.

ITEM	TOTAL	UNIT	DESCRIPTION
253	52	CU YD	PAVEMENT REPAIR
642	0.01	MILE	LANE LINE, TYPE 2
642	0.01	MILE	CENTER LINE, TYPE 2
644	0.02	MILE	EDGE LINE
644	138	LIN FT	STOP LINE
644	198	LIN FT	CHANNELIZING LINE
644	86	LIN FT	CROSSWALK LINE
644	2	EACH	LANE ARROW

HOWARD NEEDLES TAMMEN & BERGENDOFF
ARCHITECTS ENGINEERS PLANNERS
HNTB

MADE BY: ZSS DATE: 4/94
DRAWN BY: DJF DATE: 4/94
CHECKED BY: JPR DATE: 4/94
SCALE: AS SHOWN
DSSIGD05

TYPICAL FLEXIBLE PAVEMENT REPAIR AT PROPOSED LOOP DETECTORS

DETOUR LOCATION MAP

FHWA REGION	STATE	PROJECT	
5	OHIO		

73/412

CUYAHOGA COUNTY
CUY-6-14.99

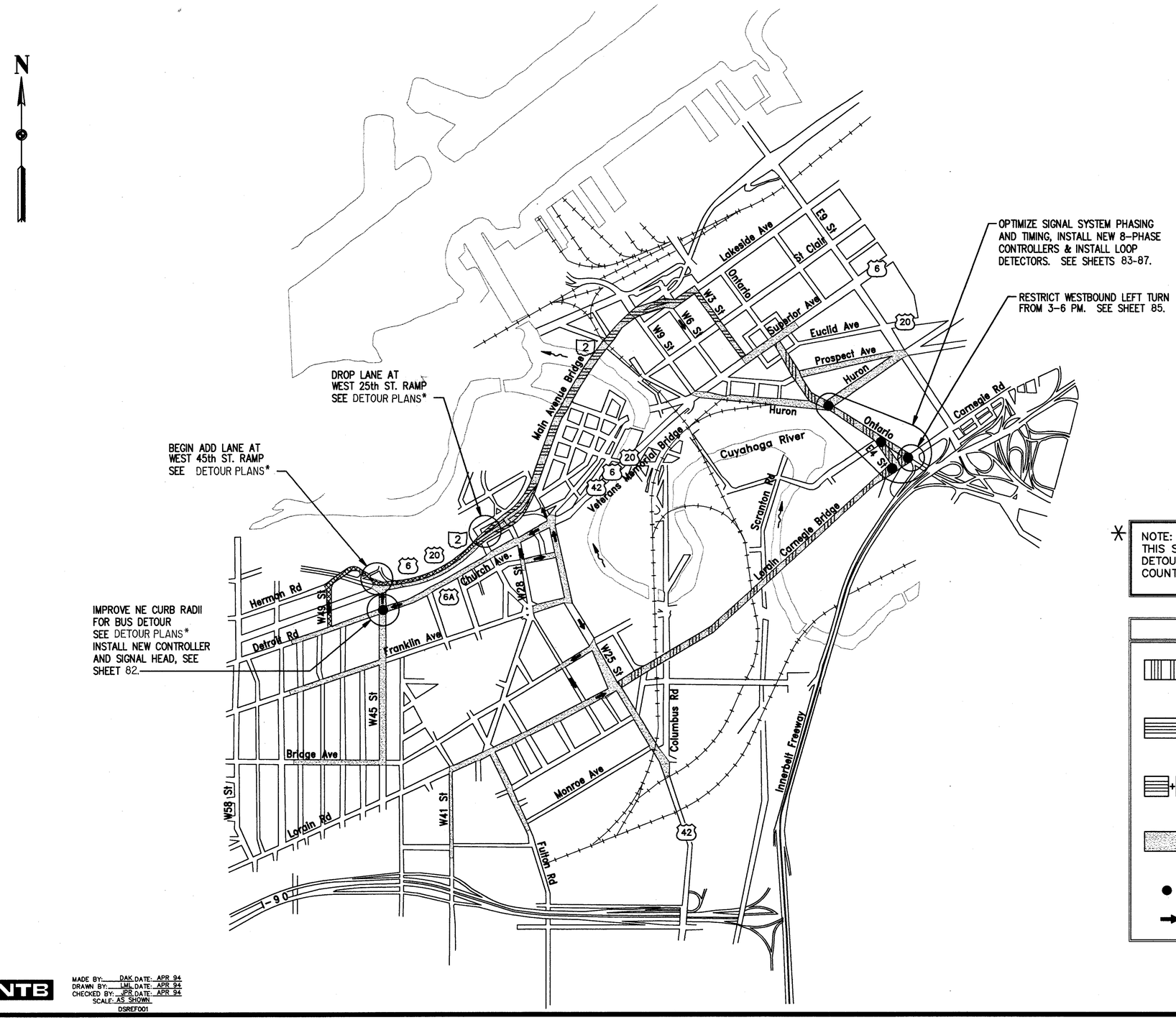

NOTE:
THIS SHEET IS INCLUDED FOR REFERENCE ONLY. THE DETOUR PLANS ARE AVAILABLE AT THE CUYAHOGA COUNTY ENGINEER'S OFFICE.

LEGEND

- US Route 42 Detour — See Sheets 74 & 75.
- US Routes 6 and 20 Detour — See Sheets 74 & 75.
- US Route 6A Detour — See Sheet 75.
- Local traffic Detour Plans — See Sheets 76–82.
- ● Modify Signal / Temporary Signal Plan
- → Bus Detour Routes

GRAPHIC SCALE
400 0 200 400
HORIZONTAL SCALE IN FEET

HOWARD NEEDLES TAMMEN & BERGENDOFF
ARCHITECTS ENGINEERS PLANNERS HNTB

MADE BY: DAK DATE: APR 94
DRAWN BY: LML DATE: APR 94
CHECKED BY: JPR DATE: APR 94
SCALE: AS SHOWN
DSREF001

EASTBOUND US ROUTE DETOUR PLAN

FHWA REGION	STATE	PROJECT	
5	OHIO		

74
412

CUYAHOGA COUNTY
CUY-6-14.99

N

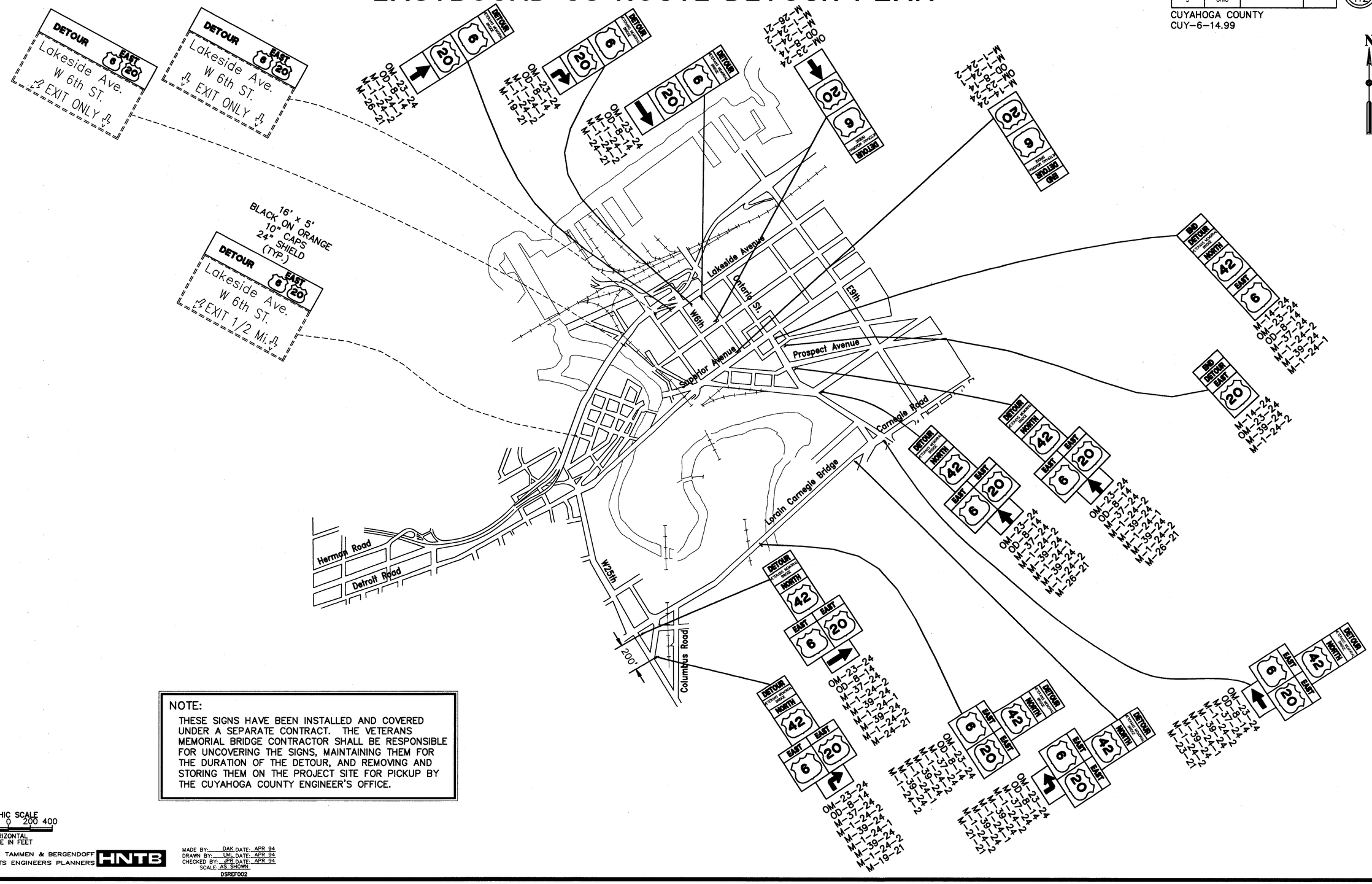

NOTE:

THESE SIGNS HAVE BEEN INSTALLED AND COVERED UNDER A SEPARATE CONTRACT. THE VETERANS MEMORIAL BRIDGE CONTRACTOR SHALL BE RESPONSIBLE FOR UNCOVERING THE SIGNS, MAINTAINING THEM FOR THE DURATION OF THE DETOUR, AND REMOVING AND STORING THEM ON THE PROJECT SITE FOR PICKUP BY THE CUYAHOGA COUNTY ENGINEER'S OFFICE.

GRAPHIC SCALE
400 0 200 400
HORIZONTAL SCALE IN FEET

HOWARD NEEDLES TAMMEN & BERGENDOFF
ARCHITECTS ENGINEERS PLANNERS HNTB

MADE BY: DAK DATE: APR 94
DRAWN BY: LML DATE: APR 94
CHECKED BY: JPR DATE: APR 94
SCALE: AS SHOWN
DSREF002

EASTBOUND US ROUTE DETOUR PLAN

WESTBOUND US ROUTE DETOUR PLAN

FHWA REGION	STATE	PROJECT	
5	OHIO		

75
412

CUYAHOGA COUNTY
CUY-6-14.99

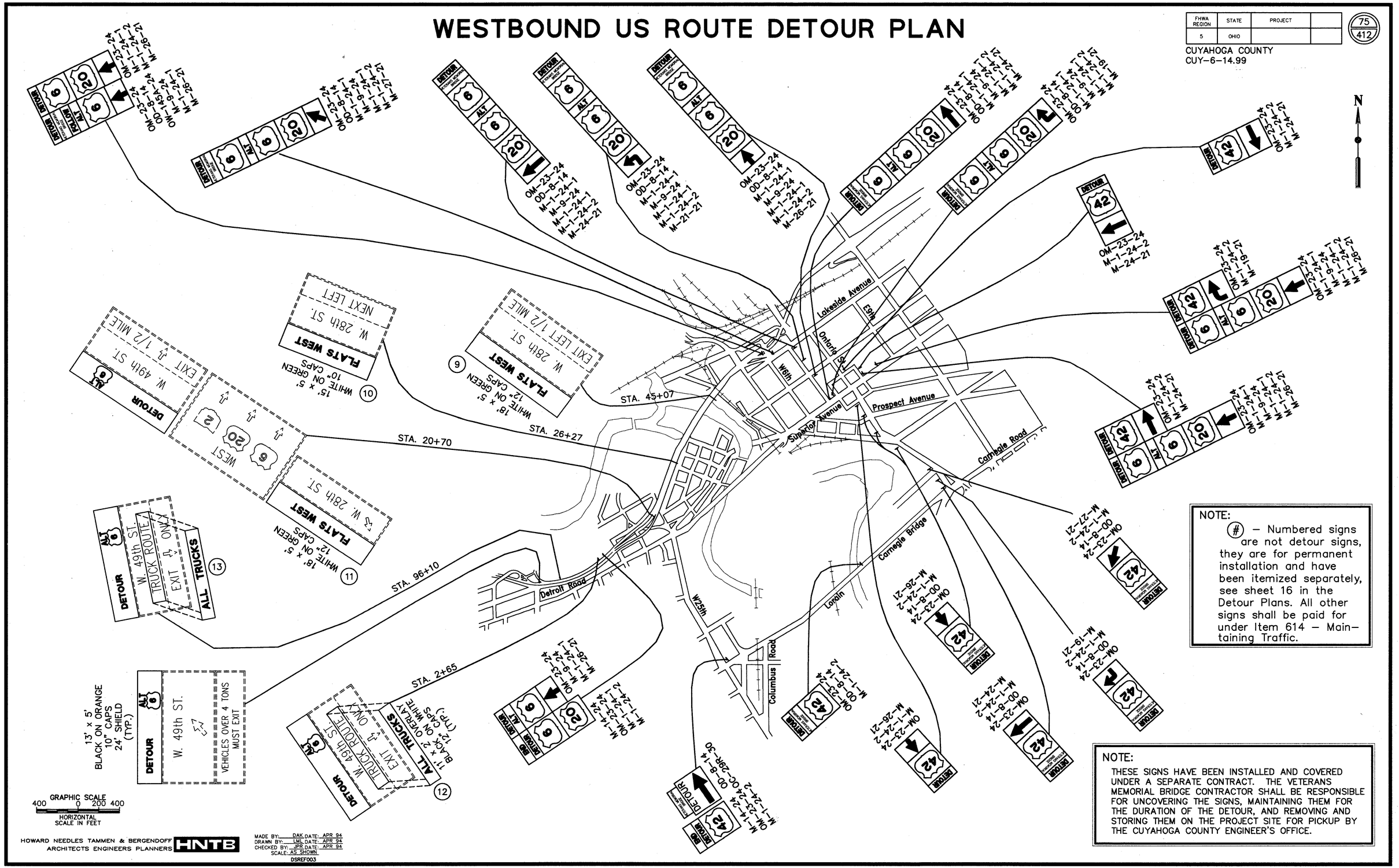

NOTE:
(#) – Numbered signs are not detour signs, they are for permanent installation and have been itemized separately, see sheet 16 in the Detour Plans. All other signs shall be paid for under Item 614 – Maintaining Traffic.

NOTE:
THESE SIGNS HAVE BEEN INSTALLED AND COVERED UNDER A SEPARATE CONTRACT. THE VETERANS MEMORIAL BRIDGE CONTRACTOR SHALL BE RESPONSIBLE FOR UNCOVERING THE SIGNS, MAINTAINING THEM FOR THE DURATION OF THE DETOUR, AND REMOVING AND STORING THEM ON THE PROJECT SITE FOR PICKUP BY THE CUYAHOGA COUNTY ENGINEER'S OFFICE.

HOWARD NEEDLES TAMMEN & BERGENDOFF
ARCHITECTS ENGINEERS PLANNERS
HNTB

MADE BY: DAK DATE: APR 94
DRAWN BY: LML DATE: APR 94
CHECKED BY: JPR DATE: APR 94
SCALE: AS SHOWN
DSREF003

WESTBOUND US ROUTE DETOUR PLAN

LOCAL STREET DETOUR PLAN

FHWA REGION	STATE	PROJECT	
5	OHIO		

76
412

CUYAHOGA COUNTY
CUY-6-14.99

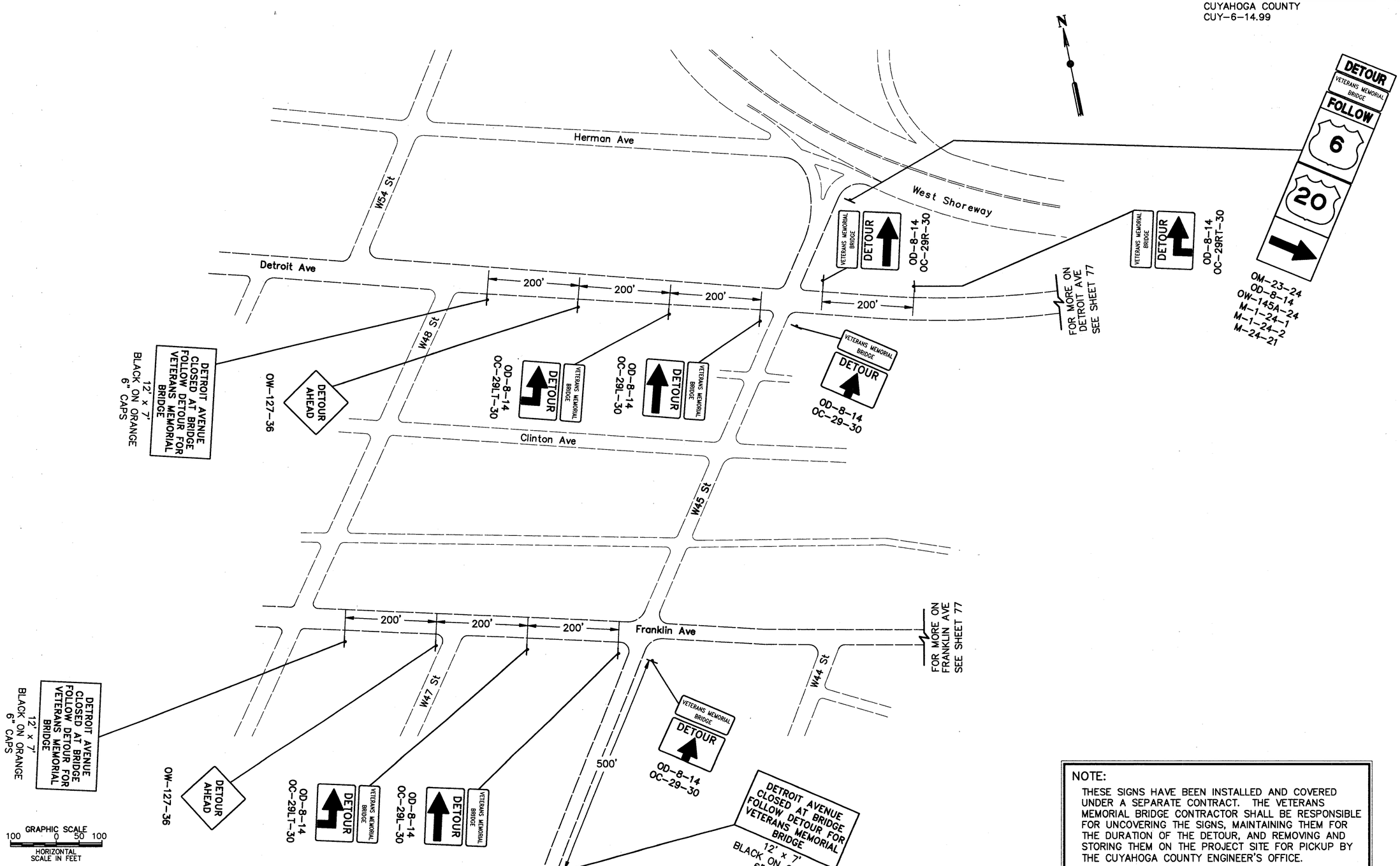

NOTE:

THESE SIGNS HAVE BEEN INSTALLED AND COVERED UNDER A SEPARATE CONTRACT. THE VETERANS MEMORIAL BRIDGE CONTRACTOR SHALL BE RESPONSIBLE FOR UNCOVERING THE SIGNS, MAINTAINING THEM FOR THE DURATION OF THE DETOUR, AND REMOVING AND STORING THEM ON THE PROJECT SITE FOR PICKUP BY THE CUYAHOGA COUNTY ENGINEER'S OFFICE.

HOWARD NEEDLES TAMMEN & BERGENDOFF
ARCHITECTS ENGINEERS PLANNERS
HNTB

MADE BY: DAK DATE: APR 94
DRAWN BY: LML DATE: APR 94
CHECKED BY: JPR DATE: APR 94
SCALE: AS SHOWN
DSREF004

LOCAL STREET DETOUR PLAN

FHWA REGION	STATE	PROJECT	
5	OHIO		

77
412

CUYAHOGA COUNTY
CUY-6-14.99

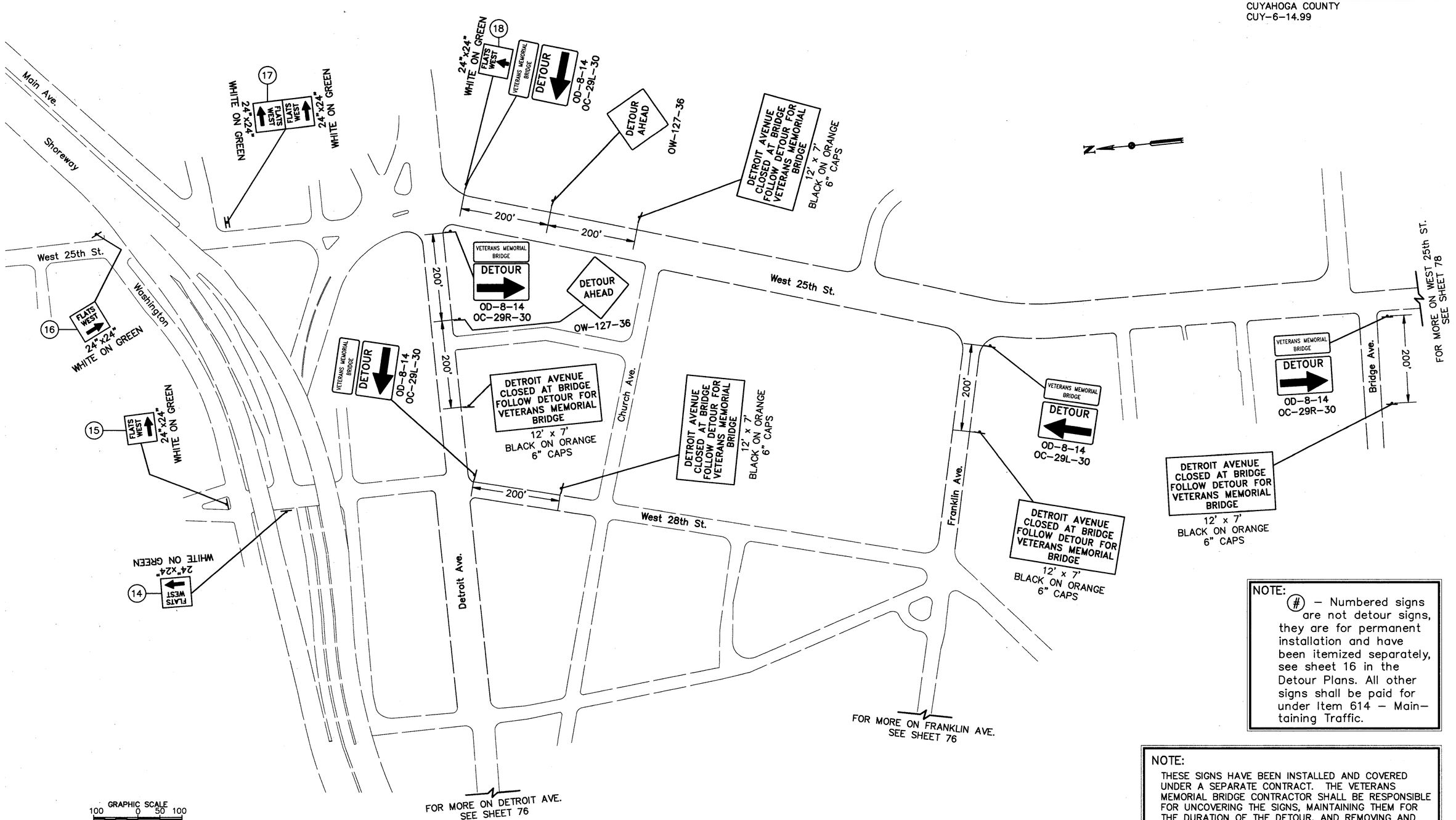

NOTE:
(#) – Numbered signs are not detour signs, they are for permanent installation and have been itemized separately, see sheet 16 in the Detour Plans. All other signs shall be paid for under Item 614 – Maintaining Traffic.

NOTE:
THESE SIGNS HAVE BEEN INSTALLED AND COVERED UNDER A SEPARATE CONTRACT. THE VETERANS MEMORIAL BRIDGE CONTRACTOR SHALL BE RESPONSIBLE FOR UNCOVERING THE SIGNS, MAINTAINING THEM FOR THE DURATION OF THE DETOUR, AND REMOVING AND STORING THEM ON THE PROJECT SITE FOR PICKUP BY THE CUYAHOGA COUNTY ENGINEER'S OFFICE.

HOWARD NEEDLES TAMMEN & BERGENDOFF
ARCHITECTS ENGINEERS PLANNERS
HNTB

MADE BY: DAK DATE: APR 94
DRAWN BY: MJG DATE: APR 94
CHECKED BY: JPR DATE: APR 94
SCALE: AS SHOWN
DSREF007

LOCAL STREET DETOUR PLAN

FHWA REGION	STATE	PROJECT	
5	OHIO		

78
412

CUYAHOGA COUNTY
CUY-6-14.99

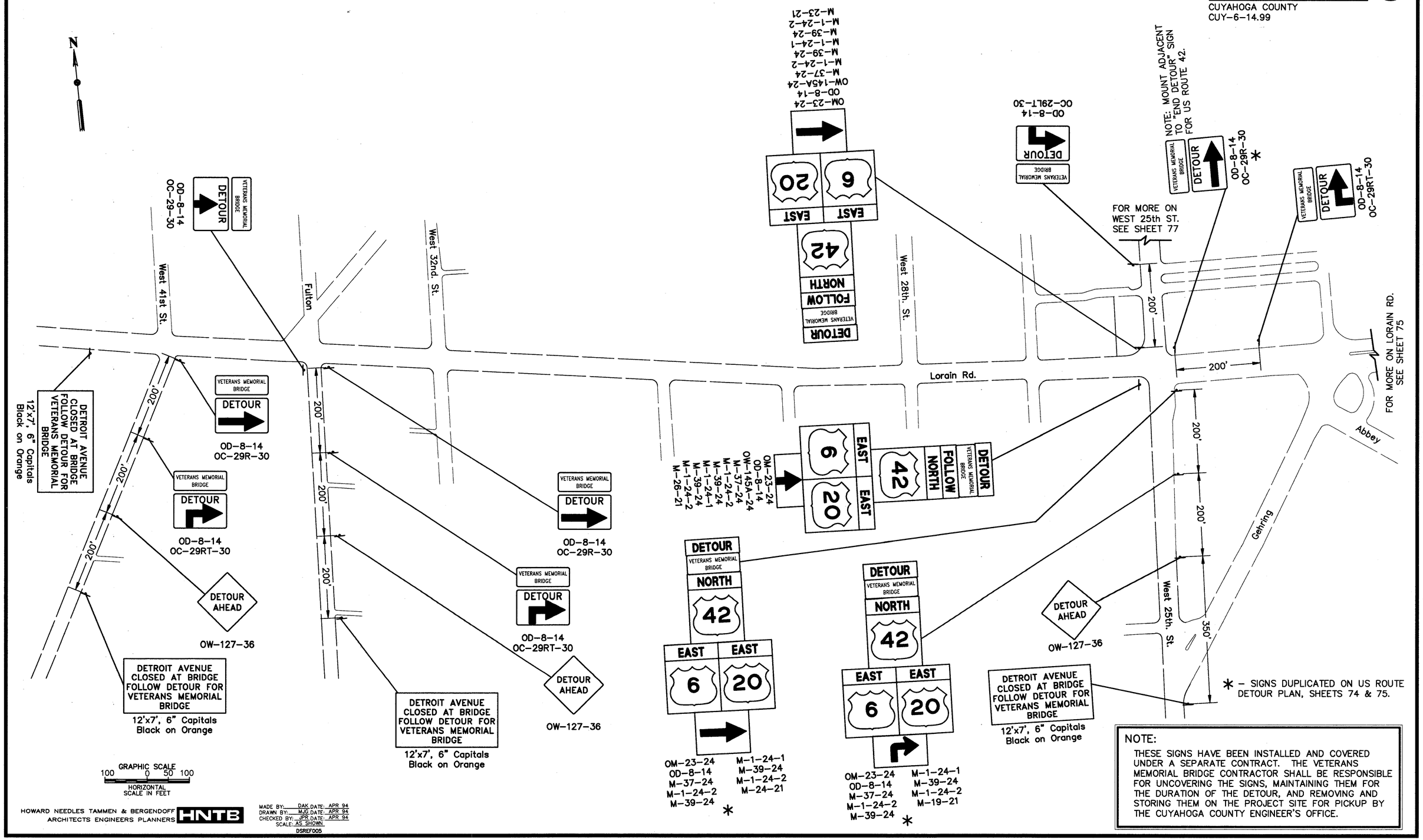

NOTE:

THESE SIGNS HAVE BEEN INSTALLED AND COVERED UNDER A SEPARATE CONTRACT. THE VETERANS MEMORIAL BRIDGE CONTRACTOR SHALL BE RESPONSIBLE FOR UNCOVERING THE SIGNS, MAINTAINING THEM FOR THE DURATION OF THE DETOUR, AND REMOVING AND STORING THEM ON THE PROJECT SITE FOR PICKUP BY THE CUYAHOGA COUNTY ENGINEER'S OFFICE.

GRAPHIC SCALE
100 0 50 100
HORIZONTAL SCALE IN FEET

HOWARD NEEDLES TAMMEN & BERGENDOFF
ARCHITECTS ENGINEERS PLANNERS
HNTB

MADE BY: DAK DATE: APR 94
DRAWN BY: MJG DATE: APR 94
CHECKED BY: JPR DATE: APR 94
SCALE: AS SHOWN
DSREF005

LOCAL STREET DETOUR PLAN

FHWA REGION	STATE	PROJECT	
5	OHIO		

79
412

CUYAHOGA COUNTY
CUY-6-14.99

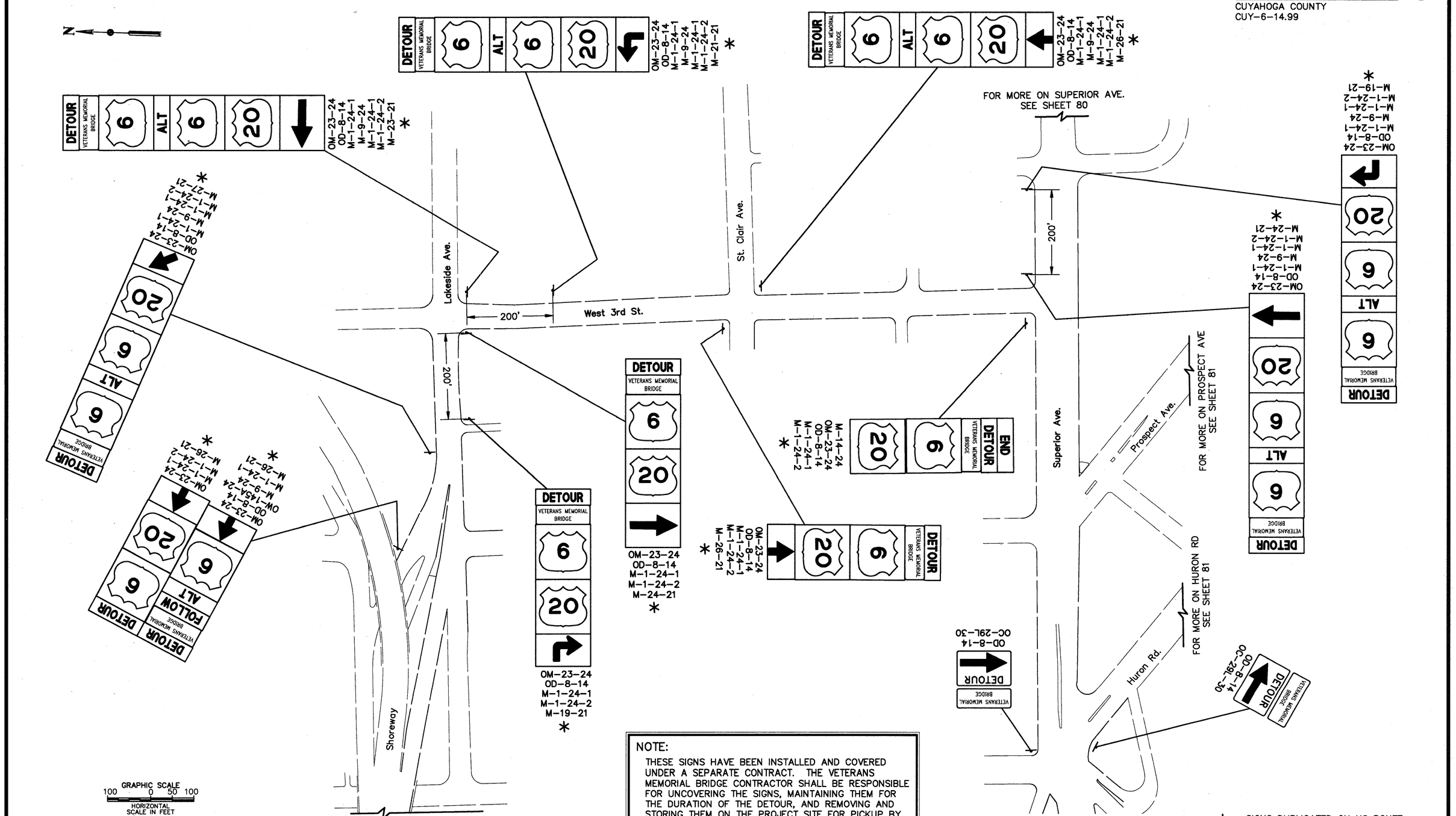

NOTE:
THESE SIGNS HAVE BEEN INSTALLED AND COVERED UNDER A SEPARATE CONTRACT. THE VETERANS MEMORIAL BRIDGE CONTRACTOR SHALL BE RESPONSIBLE FOR UNCOVERING THE SIGNS, MAINTAINING THEM FOR THE DURATION OF THE DETOUR, AND REMOVING AND STORING THEM ON THE PROJECT SITE FOR PICKUP BY THE CUYAHOGA COUNTY ENGINEER'S OFFICE.

* – SIGNS DUPLICATED ON US ROUTE DETOUR PLAN, SHEETS 74 & 75.

HOWARD NEEDLES TAMMEN & BERGENDOFF
ARCHITECTS ENGINEERS PLANNERS HNTB

MADE BY: DAK DATE: APR 94
DRAWN BY: MJG DATE: APR 94
CHECKED BY: JPR DATE: APR 94
SCALE: AS SHOWN
DSREF008

LOCAL STREET DETOUR PLAN

FHWA REGION	STATE	PROJECT	
5	OHIO		

80
412

CUYAHOGA COUNTY
CUY-6-14.99

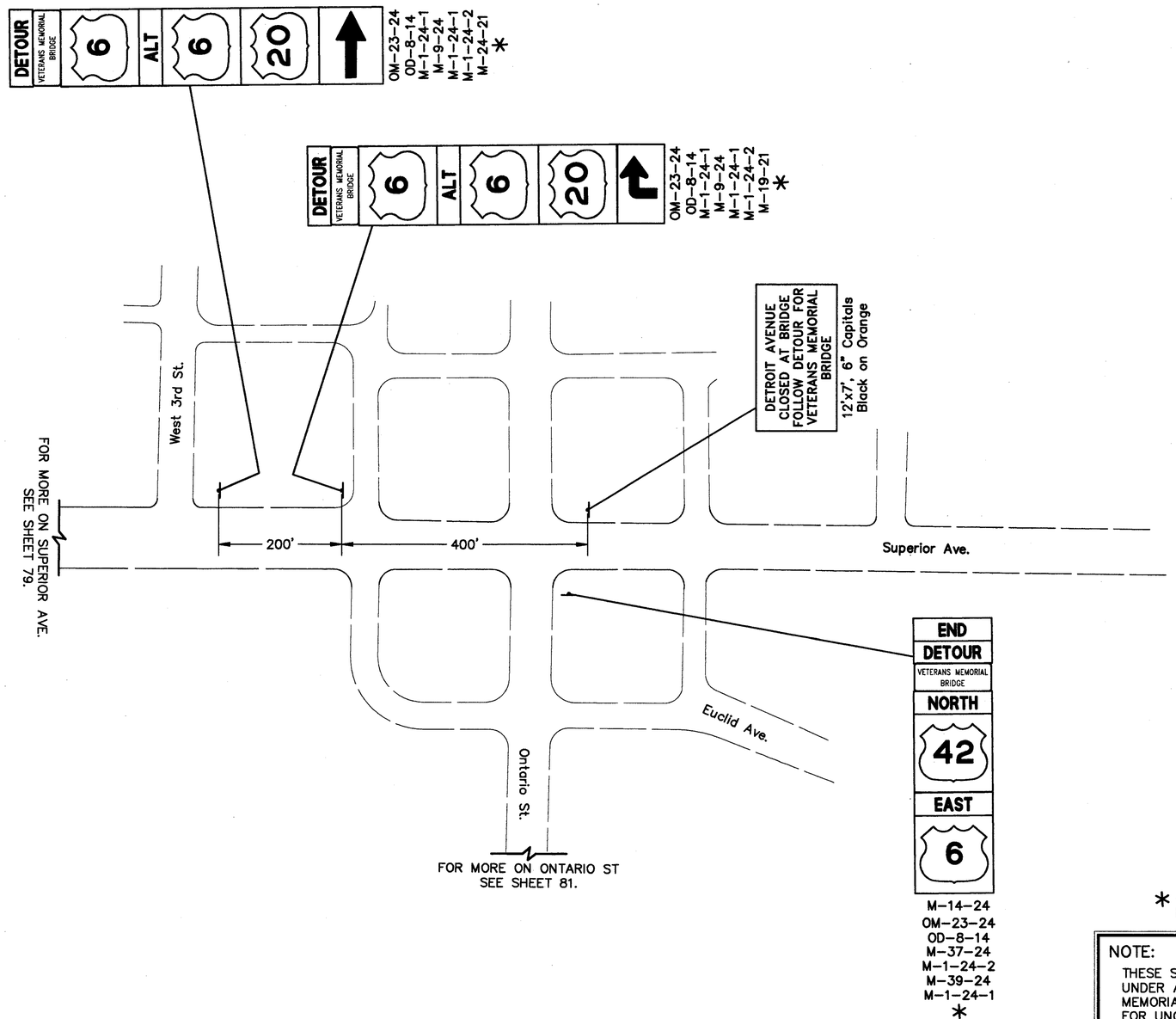

* – SIGNS DUPLICATED ON US ROUTE DETOUT PLAN, SHEETS 74 & 75.

NOTE:

THESE SIGNS HAVE BEEN INSTALLED AND COVERED UNDER A SEPARATE CONTRACT. THE VETERANS MEMORIAL BRIDGE CONTRACTOR SHALL BE RESPONSIBLE FOR UNCOVERING THE SIGNS, MAINTAINING THEM FOR THE DURATION OF THE DETOUR, AND REMOVING AND STORING THEM ON THE PROJECT SITE FOR PICKUP BY THE CUYAHOGA COUNTY ENGINEER'S OFFICE.

GRAPHIC SCALE
100 0 50 100
HORIZONTAL SCALE IN FEET

HOWARD NEEDLES TAMMEN & BERGENDOFF
ARCHITECTS ENGINEERS PLANNERS
HNTB

MADE BY: DAK DATE: APR 94
DRAWN BY: MJC DATE: APR 94
CHECKED BY: JPR DATE: APR 94
SCALE: AS SHOWN
DSREF009

LOCAL STREET DETOUR PLAN

FHWA REGION	STATE	PROJECT	
5	OHIO		

81
412

CUYAHOGA COUNTY
CUY-6-14.99

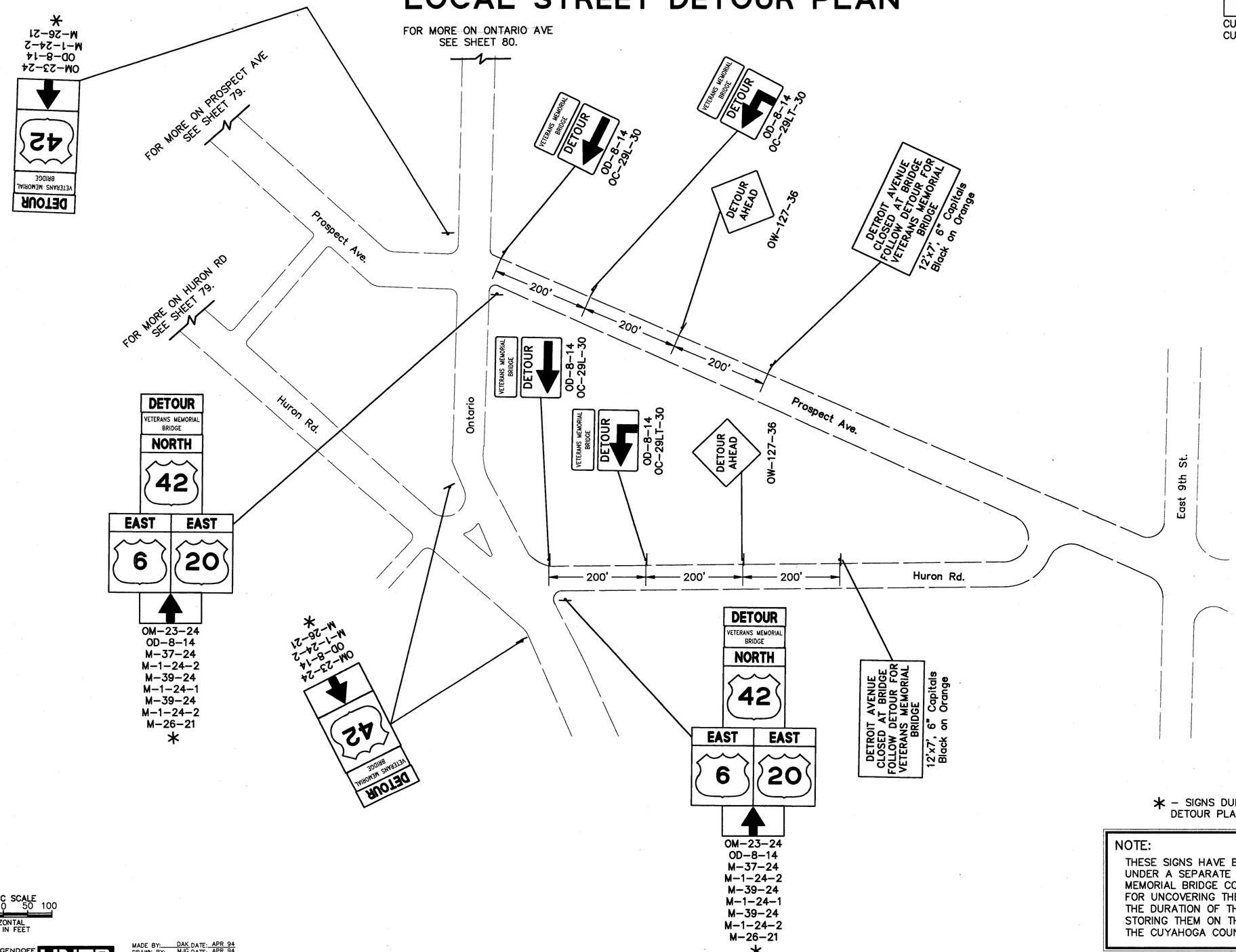

* – SIGNS DUPLICATED ON US ROUTE DETOUR PLAN, SHEETS 74 & 75.

NOTE:

THESE SIGNS HAVE BEEN INSTALLED AND COVERED UNDER A SEPARATE CONTRACT. THE VETERANS MEMORIAL BRIDGE CONTRACTOR SHALL BE RESPONSIBLE FOR UNCOVERING THE SIGNS, MAINTAINING THEM FOR THE DURATION OF THE DETOUR, AND REMOVING AND STORING THEM ON THE PROJECT SITE FOR PICKUP BY THE CUYAHOGA COUNTY ENGINEER'S OFFICE.

GRAPHIC SCALE
100 0 50 100
HORIZONTAL SCALE IN FEET

HOWARD NEEDLES TAMMEN & BERGENDOFF
ARCHITECTS ENGINEERS PLANNERS HNTB

MADE BY: DAK DATE: APR 94
DRAWN BY: MJG DATE: APR 94
CHECKED BY: JPR DATE: APR 94
SCALE: AS SHOWN
DSREF010

SIGNAL PLAN

FHWA REGION	STATE	PROJECT	
5	OHIO		

82 / 412

CUYAHOGA COUNTY
CUY-6-14.99

TRAFFIC SIGNAL TIMING AND DISPLAY CHART

SYS. C/L = 80 SEC. — START IN: FLASH ○ 8 SEC. ALL RED ● — FIRST PHASE: ϕ2 GREEN ● YELLOW ○

DETROIT AVE./ WEST 45 th ST.

		ϕ1	ϕ2 & ϕ6	ϕ4
GREEN	AM PEAK	26	18	21
	ALL OTHERS		37	23
WALK			7	7
PEDESTRIAN CLEARANCE (FDW)			11	14
YELLOW		3	3	3
ALL RED			2	2

INTERVAL COLORS

STREET	DIRECTION	SIGNAL	LENS	EMERG. FLASH	PHASE	ϕ1 & ϕ6 1	2	3	4	ϕ2 & ϕ6 5	6	7	8	ϕ4 9	10	11	12
DETROIT AVENUE	EB	1	R						R				R	R	R	R	R
			Y	Y								Y					
			G							G	G						
			K					Y									
			G			G	G										
		2	R										R	R	R	R	R
			Y	Y								Y					
			G			G	G	G	G	G	G						
	WB	3,4	R			R	R	R	R				R	R	R	R	R
			Y	Y								Y					
			G							G	G						
NORTH & SOUTH CROSSWALK	EB	C,F	DW			DW	DW	DW	DW		FDW	DW	DW	DW	DW	DW	DW
	WB	B,G	W							W							
WEST 45th STREET	SB	5,6	R	R		R	R	R	R	R	R	R	R				R
	NB	7,8	Y													Y	
			G											G	G		
EAST & WEST CROSSWALK	NB	A,D	DW			DW	DW	DW	DW	DW	DW	DW	DW		FDW	DW	DW
	SB	E,H	W											W			

NOTES:
1. AM PEAK = 6–9 AM MON – FRI
2. OMIT ϕ1 & ϕ6: 9AM – 6AM MON – FRI, ALL DAY SAT – SUN

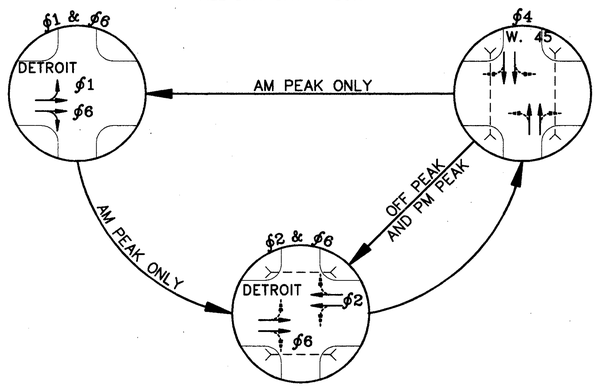

PHASE SEQUENCE DIAGRAM

THIS PHASING SHALL ONLY BE APPLICABLE FROM 6:00–9:00 AM MONDAY THRU FRIDAY. A TWO PHASE SEQUENCE CONSISTING OF ϕ2 & ϕ6 AND ϕ4 SHALL OPERATE FOR THE REMAINING HOURS OF THE DAY AND ON WEEKENDS.

NOTE:
THE SIGNAL WORK SHOWN ON THIS PLAN HAS BEEN PERFORMED UNDER A SEPARATE CONTRACT. THE VETERANS MEMORIAL BRIDGE CONTRACTOR IS RESPONSIBLE FOR IMPLEMENTING THE TIMING PATTERNS SHOWN HERE.

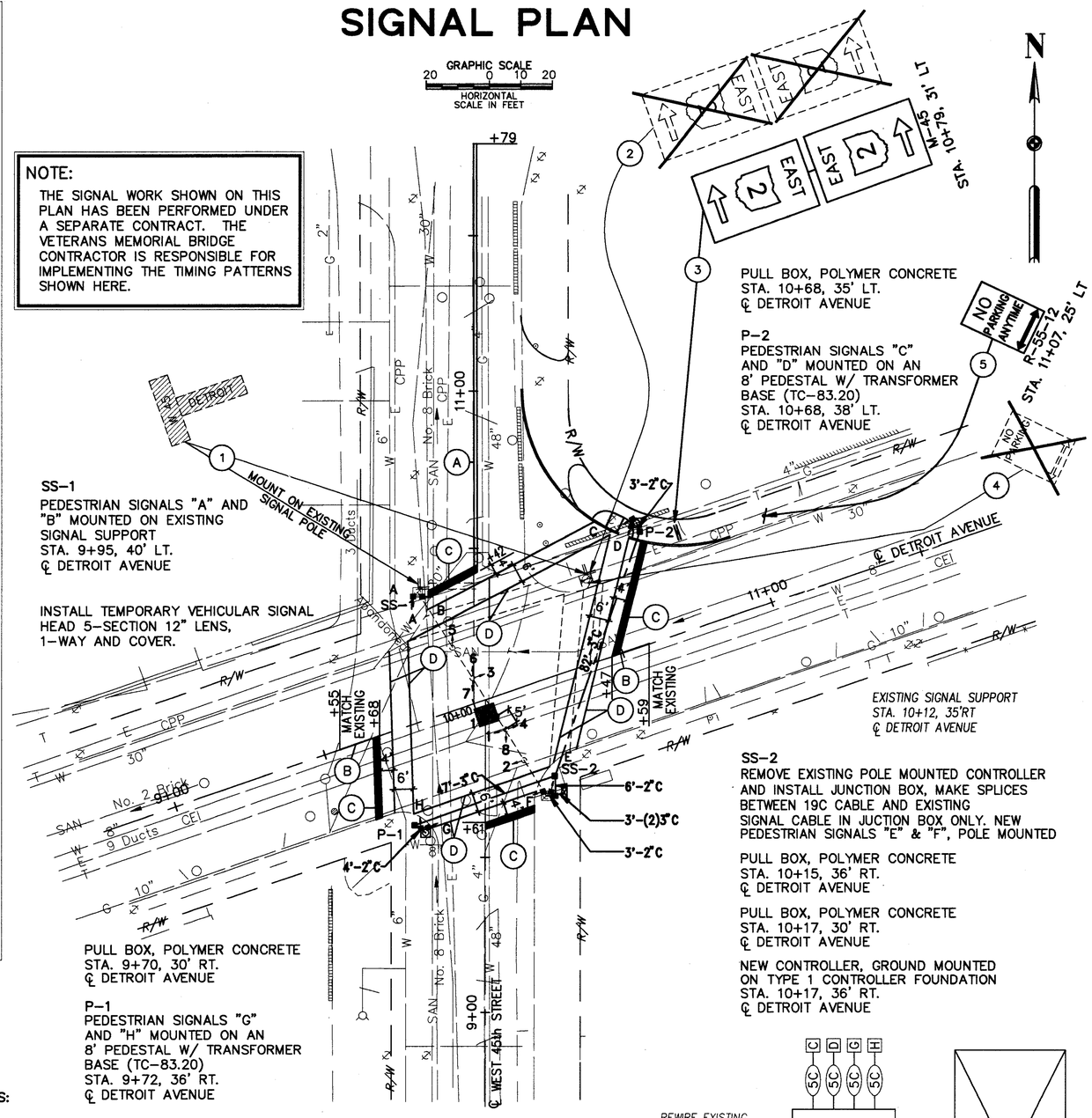

SS-1
PEDESTRIAN SIGNALS "A" AND "B" MOUNTED ON EXISTING SIGNAL SUPPORT
STA. 9+95, 40' LT.
℄ DETROIT AVENUE

INSTALL TEMPORARY VEHICULAR SIGNAL HEAD 5-SECTION 12" LENS, 1-WAY AND COVER.

PULL BOX, POLYMER CONCRETE
STA. 10+68, 35' LT.
℄ DETROIT AVENUE

P-2
PEDESTRIAN SIGNALS "C" AND "D" MOUNTED ON AN 8' PEDESTAL W/ TRANSFORMER BASE (TC-83.20)
STA. 10+68, 38' LT.
℄ DETROIT AVENUE

EXISTING SIGNAL SUPPORT
STA. 10+12, 35'RT
℄ DETROIT AVENUE

SS-2
REMOVE EXISTING POLE MOUNTED CONTROLLER AND INSTALL JUNCTION BOX, MAKE SPLICES BETWEEN 19C CABLE AND EXISTING SIGNAL CABLE IN JUCTION BOX ONLY. NEW PEDESTRIAN SIGNALS "E" & "F", POLE MOUNTED

PULL BOX, POLYMER CONCRETE
STA. 10+15, 36' RT.
℄ DETROIT AVENUE

PULL BOX, POLYMER CONCRETE
STA. 10+17, 30' RT.
℄ DETROIT AVENUE

NEW CONTROLLER, GROUND MOUNTED ON TYPE 1 CONTROLLER FOUNDATION
STA. 10+17, 36' RT.
℄ DETROIT AVENUE

PULL BOX, POLYMER CONCRETE
STA. 9+70, 30' RT.
℄ DETROIT AVENUE

P-1
PEDESTRIAN SIGNALS "G" AND "H" MOUNTED ON AN 8' PEDESTAL W/ TRANSFORMER BASE (TC-83.20)
STA. 9+72, 36' RT.
℄ DETROIT AVENUE

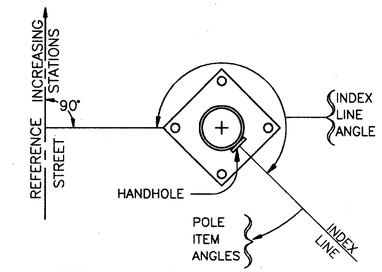

NOTES
1. ALL ANGLES MEASURED CLOCKWISE
2. INDEX LINE GOES THROUGH THE CENTER OF THE HANDHOLE

PEDESTAL WITH TRANSFORMER BASE TC-83.20

REFERENCE STREET	STATION & OFFSET	POLE NO.	POLE HEIGHT (FT.)	INDEX LINE ANGLE (DEG.)	ANGLES (DEG.) FROM INDEX LINE: PEDESTRIAN SIGNAL 1	PEDESTRIAN SIGNAL 2
DETROIT	9+72, 36'R	P-1	8	180°	180°	90°
DETROIT	10+68, 38'L	P-2	8	90°	90°	180°
EXISTING SIGNALS						
DETROIT	9+95, 40'L	SS-1	–	0°	270°	0°
DETROIT	10+17, 36'R	SS-2	–	0°	90°	0°

LEGEND

	PROPOSED TEMPORARY SIGNAL
	EXISTING SIGNAL
	EXISTING SPAN WIRE
	SIGN
	CURB RAMP
	PROPOSED CONTROLLER
	PROPOSED PEDESTRIAN SIGNAL ON PEDESTAL
	PROPOSED SIGN
	EXISTING SIGN TO BE RELOCATED
	EXISTING SIGN TO BE REMOVED AND DISPOSED
A	ITEM 642 – CENTERLINE, DOUBLE SOLID, TYPE 2
B	ITEM 642 – CENTERLINE, SINGLE BROKEN, TYPE 2
C	ITEM 644 – STOP LINE
D	ITEM 644 – CROSSWALK LINE

NEW SIGNAL — 12" Lens — R, Y, G — 1

EXISTING SIGNALS — 12" Lens — R, Y, G — 2, 3, 4, 5, 6, 7, & 8 — 12" Lens — R, G — 1 — REMOVE

PROPOSED PEDESTRIAN SIGNAL — A, B, C, D, E, F, G, H

SIGNAL HEAD DETAIL

NOTES:
1. PAYMENT FOR SPLICING OF EXISTING SIGNAL CABLE AND THE PROPOSED 19C SIGNAL CABLE SHALL BE INCLUDED IN THE UNIT BID PRICE FOR ITEM 632 – SIGNAL CABLE, MISC.: 19 CONDUCTOR NO. 14 AWG.
2. GROUND RODS FOR PEDESTALS AND CONTROLLER SHALL BE 1" X 10'.
3. THE UNDERGROUND UTILITIES ARE SHOWN ACCORDING TO INFORMATION FURNISHED BY THE UTILITIES CONCERNED. THEIR ACCURACY IS NOT GUARANTEED, THEREFORE THEY SHOULD BE RECHECKED BEFORE UNDERGROUND CONSTRUCTION BEGINS.

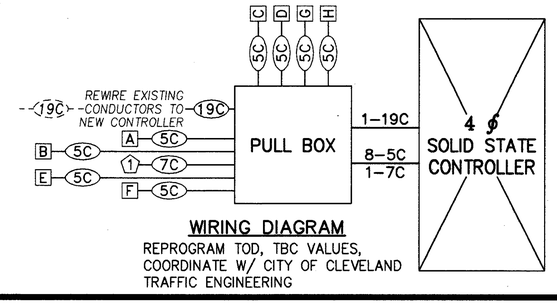

WIRING DIAGRAM
REPROGRAM TOD, TBC VALUES, COORDINATE W/ CITY OF CLEVELAND TRAFFIC ENGINEERING

HOWARD NEEDLES TAMMEN & BERGENDOFF
ARCHITECTS ENGINEERS PLANNERS
HNTB

MADE BY: DAK DATE: 1/94
DRAWN BY: DAK DATE: 1/94
CHECKED BY: JPR DATE: 2/94
SCALE: SEE ABOVE
DSREFX01

DETROIT/WEST 45TH SIGNAL PLAN

SIGNAL PLAN

FHWA REGION	STATE	PROJECT	
5	OHIO		

83/412

CUYAHOGA COUNTY
CUY-6-14.99

PHASE	ϕ2	ϕ3	ϕ4	ϕ5	ϕ6	ϕ7	ϕ8
INITIAL	8	10	20	8	10	8	20
PASSAGE	3.0	3.0	–	2.5	3.0	2.5	–
YELLOW	3	3	3	3	3	3	3
RED	2	2	2	2	2	2	2
MAX I	27	43	36	12	27	8	36
MAX II	27	43	36	12	27	8	36
WALK	4	–	4	–	4	–	4
PED CLEAR	21	–	26	–	21	–	26
RECALL	MIN	NONE	MIN	NONE	MIN	NONE	MIN
MEMORY	OFF	OFF	–	OFF	OFF	OFF	–

SIGNAL TIMING CHART

LOOP	# TURNS	STATION	OFFSET	SIZE	HOOK-UP	CALL/DELAY/EXTEND	TYPE	REMARKS
L-1	2	116+65	70'RT	6X30	ϕ2	CALL/EXTEND/5 SEC. DELAY	PRESENCE	℄ ONTARIO ST.
L-2	2	116+43	73'RT	6X25	ϕ2	CALL/EXTEND	PRESENCE	℄ ONTARIO ST.
L-3	2	116+32	72'RT	6X25	ϕ5	CALL/EXTEND	PRESENCE	℄ ONTARIO ST.
L-4	2	115+66	16'RT	6X25	ϕ3	CALL/EXTEND/2 SEC. DELAY	PRESENCE	℄ ONTARIO ST.
L-5	2	115+65	6'RT	6X25	ϕ3	CALL/EXTEND/2 SEC. DELAY	PRESENCE	℄ ONTARIO ST.
L-6	2	116+46	55'LT	6X30	ϕ6	CALL/EXTEND/5 SEC. DELAY	PRESENCE	℄ ONTARIO ST.
L-7	2	116+59	49'LT	6X30	ϕ6	CALL/EXTEND/5 SEC. DELAY	PRESENCE	℄ ONTARIO ST.
L-8	2	116+85	50'LT	6X25	ϕ6	CALL/EXTEND/2 SEC. DELAY	PRESENCE	℄ ONTARIO ST.
L-9	2	117+26	6'RT	6X25	ϕ7	CALL/EXTEND	PRESENCE	℄ ONTARIO ST.

LOOP DETECTOR CHART

EXISTING SIGNALS

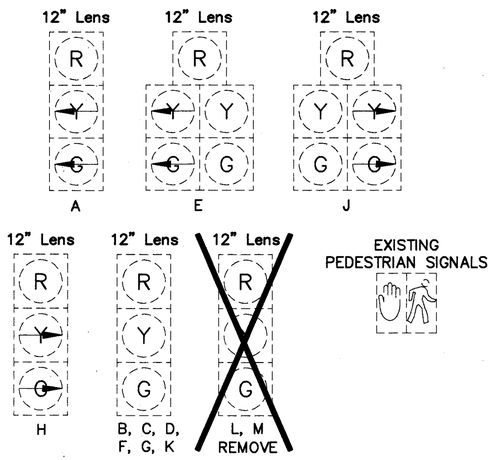

NEW SIGNALS
POLYCARBONATE HEADS
RIGID MOUNT
TUNNEL VISORS

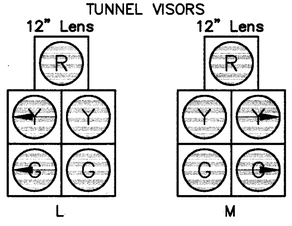

SIGNAL HEAD DETAILS

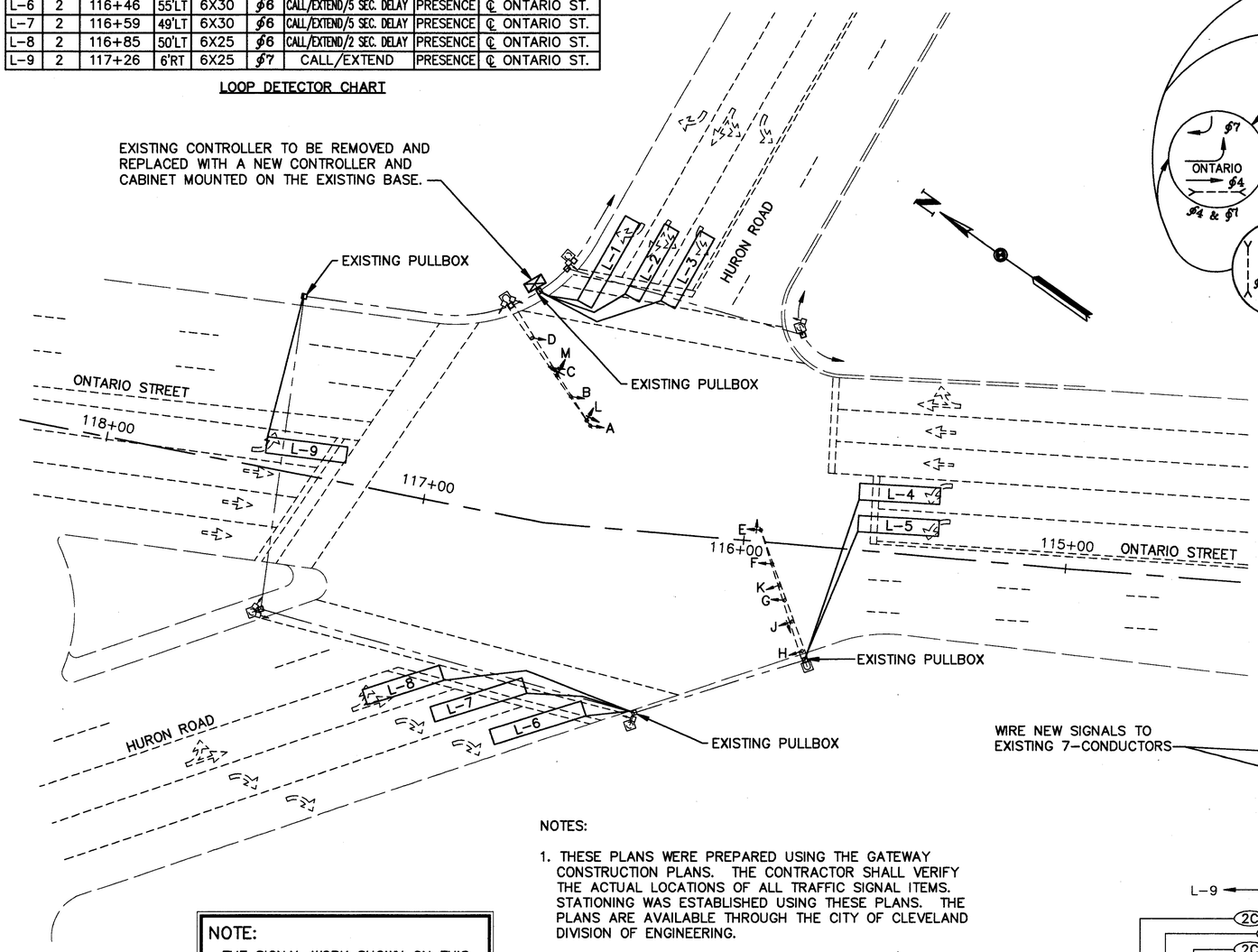

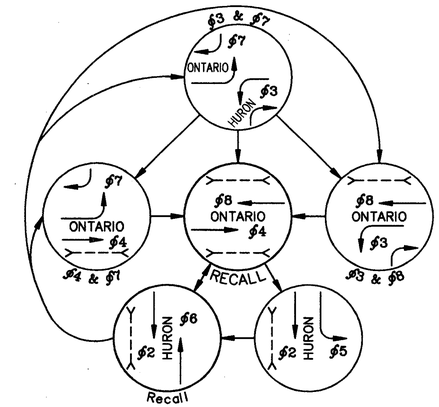

PHASE SEQUENCE DIAGRAM
Ontario / Huron

NOTE:

THE SIGNAL WORK SHOWN ON THIS PLAN HAS BEEN PERFORMED UNDER A SEPARATE CONTRACT. THE VETERANS MEMORIAL BRIDGE CONTRACTOR IS RESPONSIBLE FOR IMPLEMENTING THE TIMING PATTERNS SHOWN HERE. COORDINATE THIS WORK WITH THE CITY OF CLEVELAND DIVISION OF TRAFFIC ENGINEERING.

NOTES:

1. THESE PLANS WERE PREPARED USING THE GATEWAY CONSTRUCTION PLANS. THE CONTRACTOR SHALL VERIFY THE ACTUAL LOCATIONS OF ALL TRAFFIC SIGNAL ITEMS. STATIONING WAS ESTABLISHED USING THESE PLANS. THE PLANS ARE AVAILABLE THROUGH THE CITY OF CLEVELAND DIVISION OF ENGINEERING.
2. REMOVALS:
   - CONTROLLER CABINET AND ACCESSORIES
   - 3 LENS SIGNAL HEADS L AND M.
3. THE CONTRACTOR SHALL BE RESPONSIBLE FOR MOUNTING NEW SIGNAL HEADS AND MAINTAINING PROPER CLEARANCE HEIGHTS.

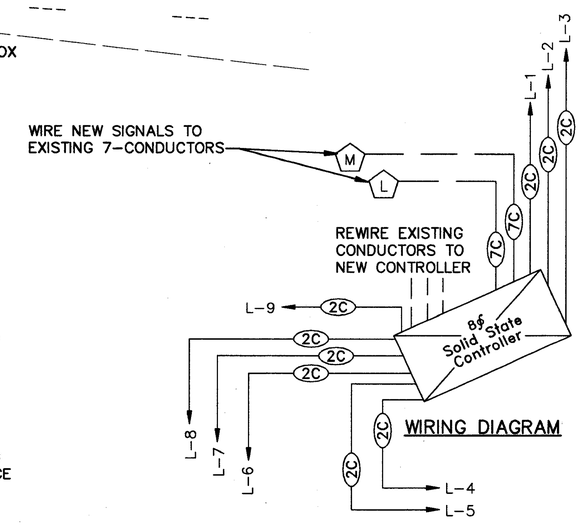

WIRING DIAGRAM

GRAPHIC SCALE
20 0 10 20
HORIZONTAL SCALE IN FEET

HOWARD NEEDLES TAMMEN & BERGENDOFF
ARCHITECTS ENGINEERS PLANNERS
HNTB

MADE BY: DAK DATE: 3/94
DRAWN BY: LML DATE: 3/94
CHECKED BY: JPR DATE: 4/94
SCALE: AS SHOWN
DSREFX03

ONTARIO ST./HURON RD. SIGNAL PLAN

SIGNAL PLAN

FHWA REGION	STATE	PROJECT	
5	OHIO		

84/412

CUYAHOGA COUNTY
CUY-6-14.99

PHASE	ϕ2	ϕ3	ϕ4	ϕ8
INITIAL	10	8	20	20
PASSAGE	3.0	2.5	–	–
YELLOW	3	3	3	3
RED	2	2	2	2
MAX I	25	13	71	71
MAX II	25	13	71	71
WALK	4	–	10	10
PED CLEAR	19	–	14	14
RECALL	NONE	NONE	MIN	MIN
MEMORY	OFF	OFF	–	–

SIGNAL TIMING CHART

EXISTING SIGNALS

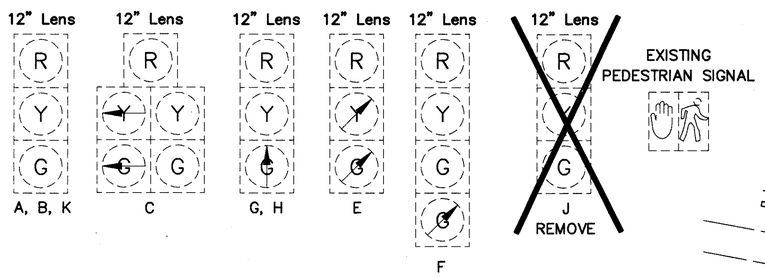

NEW SIGNAL
POLYCARBONATE HEAD
RIGID MOUNTED

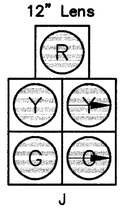

SIGNAL HEAD DETAILS

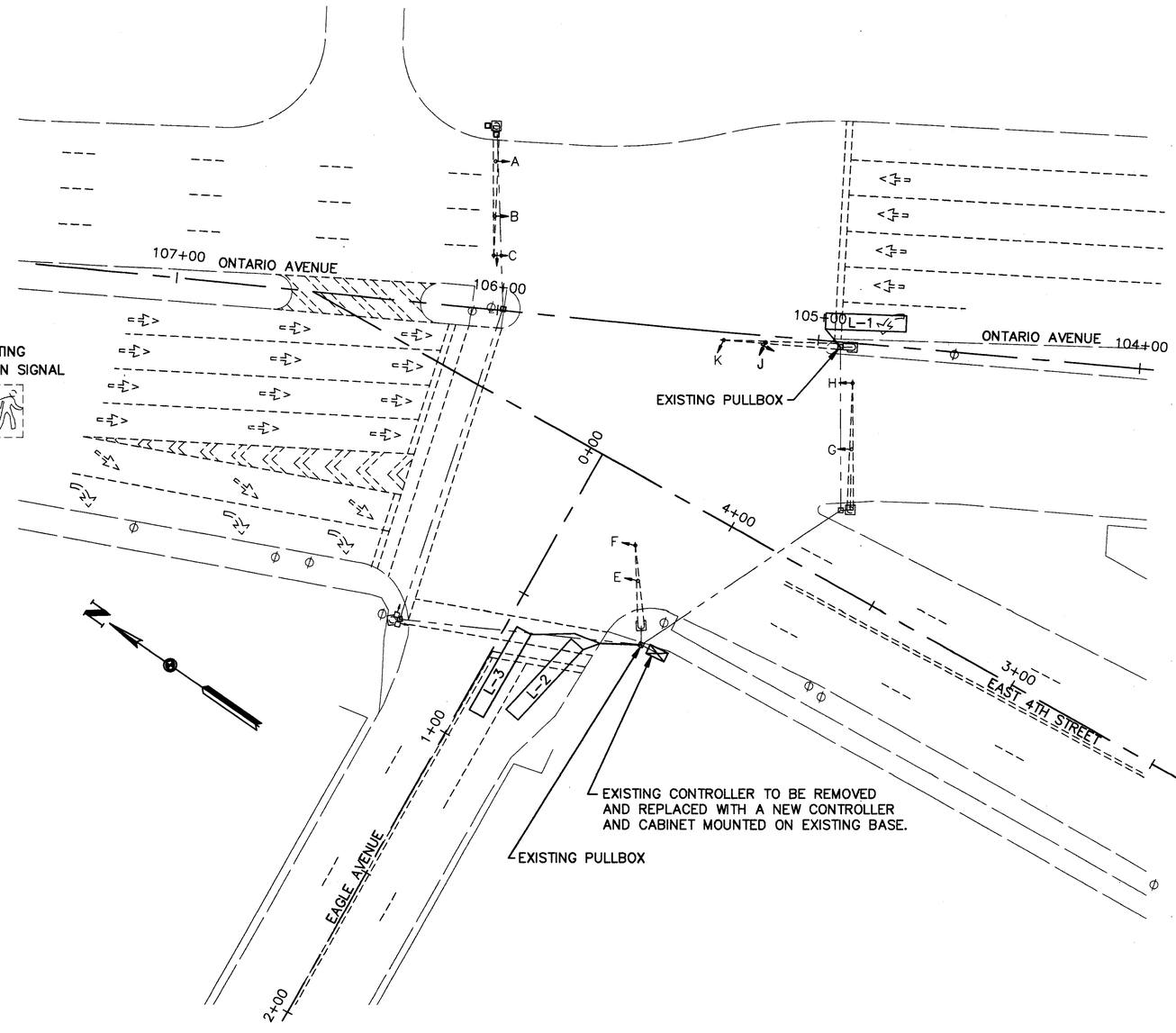

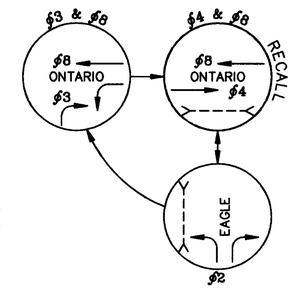

PHASE SEQUENCE DIAGRAM
Eagle / Ontario / E. 4th

NOTE:
THE SIGNAL WORK SHOWN ON THIS PLAN HAS BEEN PERFORMED UNDER A SEPARATE CONTRACT. THE VETERANS MEMORIAL BRIDGE CONTRACTOR IS RESPONSIBLE FOR IMPLEMENTING THE TIMING PATTERNS SHOWN HERE. COORDINATE THIS WORK WITH THE CITY OF CLEVELAND DIVISION OF TRAFFIC ENGINEERING.

NOTES:

1. THESE PLANS WERE PREPARED USING THE GATEWAY CONSTRUCTION PLANS. THE CONTRACTOR SHALL VERIFY THE ACTUAL LOCATIONS OF ALL TRAFFIC SIGNAL ITEMS. STATIONING WAS ESTABLISHED USING THESE PLANS. THE PLANS ARE AVAILABLE THROUGH THE CITY OF CLEVELAND DIVISION OF ENGINEERING.
2. REMOVALS:
   –CONTROLLER, CABINET AND ACCESSORIES
   –3 LENS SIGNAL HEAD J.
3. THE CONTRACTOR SHALL BE RESPONSIBLE FOR MOUNTING NEW SIGNAL HEADS AND MAINTAINING PROPER CLEARANCE HEIGHTS.

LOOP	# TURNS	STATION	OFFSET	SIZE	HOOK-UP	CALL/DELAY/EXTEND	TYPE	REMARKS
L-1	2	104+98	4'RT	6X25	ϕ3	CALL/EXTEND	PRESENCE	℄ ONTARIO AVE
L-2	2	4+26	55'LT	6X30	ϕ2	CALL/EXTEND/5 SEC. DELAY	PRESENCE	℄ E. 4TH ST.
L-3	2	4+43	30'LT	6X30	ϕ2	CALL/EXTEND	PRESENCE	℄ E. 4TH ST.

LOOP DETECTOR CHART

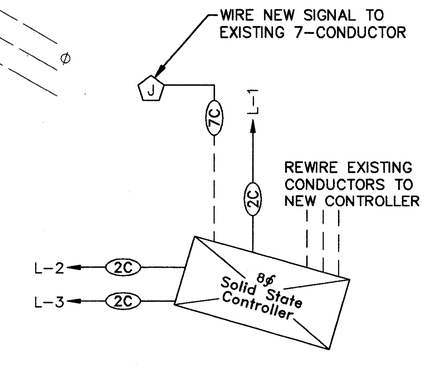

WIRING DIAGRAM

GRAPHIC SCALE
20 0 10 20
HORIZONTAL
SCALE IN FEET

HOWARD NEEDLES TAMMEN & BERGENDOFF
ARCHITECTS ENGINEERS PLANNERS
HNTB

MADE BY: DAK DATE: 3/94
DRAWN BY: LML DATE: 3/94
CHECKED BY: JPR DATE: 4/94
SCALE: AS SHOWN
DSREFX04

ONTARIO ST./EAGLE AVE./ EAST 4TH ST. SIGNAL PLAN

SIGNAL PLAN

FHWA REGION	STATE	PROJECT	
5	OHIO		

85/412

CUYAHOGA COUNTY
CUY-6-14.99

PHASE	ϕ1	ϕ2	ϕ3	ϕ4	ϕ6	ϕ8
INITIAL	8	20	8	20	20	20
PASSAGE	2.5	–	2.5	–	–	–
YELLOW	3	3	3	3	3	3
RED	2	2	2	2	2	2
MAX I	38	37	14	39	37	39
MAX II	38	37	14	39	37	39
WALK	–	7	–	4	7	4
PED CLEAR	–	13	–	24	13	24
RECALL	NONE	MIN	NONE	MIN	MIN	MIN
MEMORY	OFF	–	OFF	–	–	–

SIGNAL TIMING CHART

NOTE:

THE SIGNAL WORK SHOWN ON THIS PLAN HAS BEEN PERFORMED UNDER A SEPARATE CONTRACT. THE VETERANS MEMORIAL BRIDGE CONTRACTOR IS RESPONSIBLE FOR IMPLEMENTING THE TIMING PATTERNS SHOWN HERE. COORDINATE THIS WORK WITH THE CITY OF CLEVELAND DIVISION OF TRAFFIC ENGINEERING.

TIME OF DAY OPERATION SCHEDULE

THE FIBER OPTIC NO LEFT TURN SIGN SHALL BE ILLUMINATED ON WEEKDAYS FROM 3 – 6 PM. ALL OTHER TIMES IT SHALL BE BLANKED OUT.

EXISTING SIGNALS

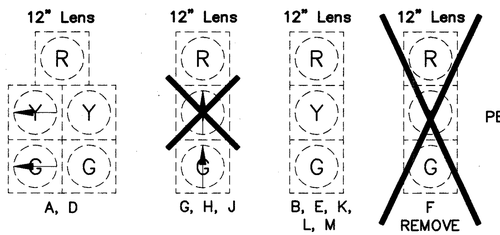

NEW SIGNAL
POLYCARBONATE HEADS
RIGID MOUNTED

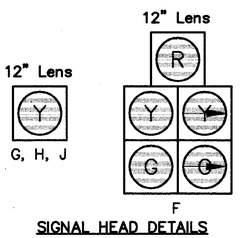

SIGNAL HEAD DETAILS

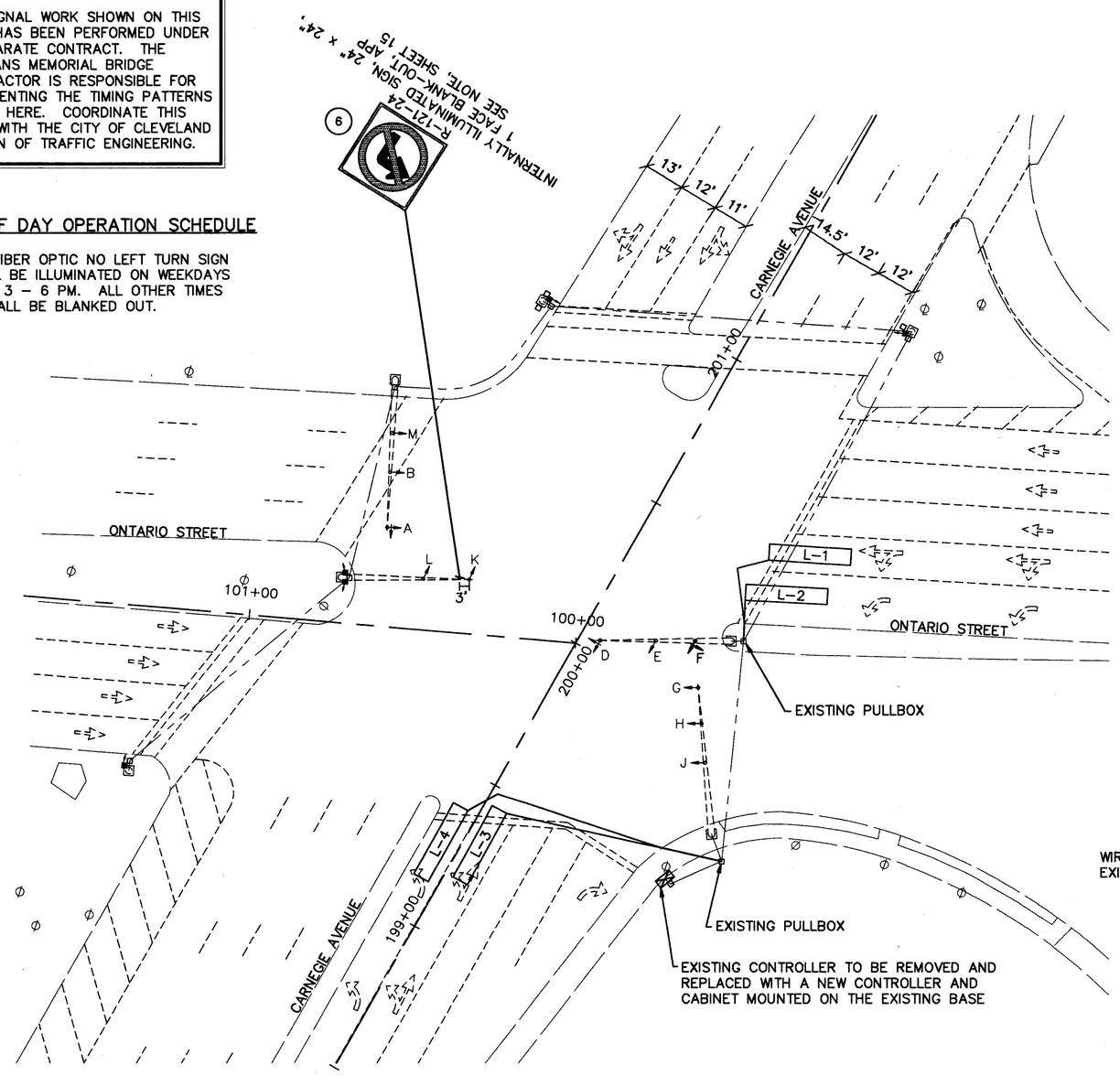

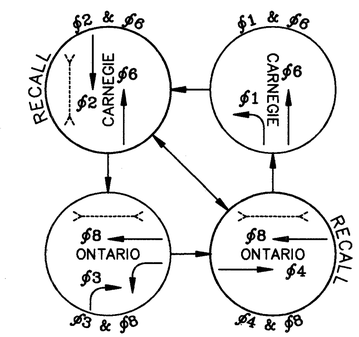

PHASE SEQUENCE DIAGRAM
Carnegie / Ontario

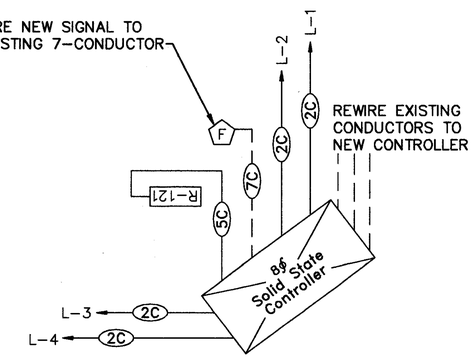

WIRING DIAGRAM

NOTES:

1. THESE PLANS WERE PREPARED USING THE GATEWAY CONSTRUCTION PLANS. THE CONTRACTOR SHALL VERIFY THE ACTUAL LOCATIONS OF ALL TRAFFIC SIGNAL ITEMS. STATIONING WAS ESTABLISHED USING THESE PLANS. THE PLANS ARE AVAILABLE THROUGH THE CITY OF CLEVELAND DIVISION OF ENGINEERING.
2. REMOVALS:
   –CONTROLLER, CABINET AND ACCESSORIES
   –3 LENS SIGNAL HEAD F.
3. THE CONTRACTOR SHALL BE RESPONSIBLE FOR MOUNTING NEW SIGNAL HEADS AND MAINTAINING PROPER CLEARANCE HEIGHTS.
4. ALL SIGNAL HEADS CONTAINING YELLOW THRU ARROWS SHALL BE REPLACED BY SOLID YELLOW BALLS.

LOOP	# TURNS	STATION	OFFSET	SIZE	HOOK-UP	CALL/DELAY/EXTEND	TYPE	REMARKS
L-1	2	99+50	18'RT	6X25	ϕ3	CALL/EXTEND	PRESENCE	℄ ONTARIO AVE.
L-2	2	99+44	31'RT	6X25	ϕ3	CALL/EXTEND	PRESENCE	℄ ONTARIO AVE.
L-3	2	199+44	2'RT	6X25	ϕ1	CALL/EXTEND	PRESENCE	℄ CARNEGIE AVE.
L-4	2	199+39	3'LT	6X25	ϕ1	CALL/EXTEND	PRESENCE	℄ CARNEGIE AVE.

LOOP DETECTOR CHART

GRAPHIC SCALE
20 0 10 20
HORIZONTAL SCALE IN FEET

HOWARD NEEDLES TAMMEN & BERGENDOFF
ARCHITECTS ENGINEERS PLANNERS
HNTB

MADE BY: DAK DATE: 3/94
DRAWN BY: LML DATE: 3/94
CHECKED BY: JPR DATE: 4/94
SCALE: AS SHOWN
DSREFX05

ONTARIO ST./ CARNEGIE AVE. SIGNAL PLAN

SIGNAL PLAN

FHWA REGION	STATE	PROJECT	
5	OHIO		

86
412

CUYAHOGA COUNTY
CUY-6-14.99

PHASE	ϕ2	ϕ4	ϕ5	ϕ6
INITIAL	20	10	8	20
PASSAGE	–	2.5	2.5	–
YELLOW	3	3	3	3
RED	2	2	2	2
MAX I	74	45	11	74
MAX II	74	45	11	74
RECALL	MIN	NONE	NONE	MIN
MEMORY	–	OFF	OFF	–

SIGNAL TIMING CHART

EXISTING SIGNALS

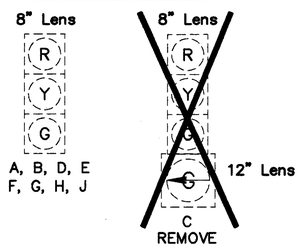

NEW SIGNAL

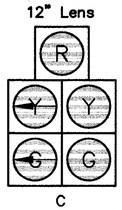

SIGNAL HEAD DETAILS

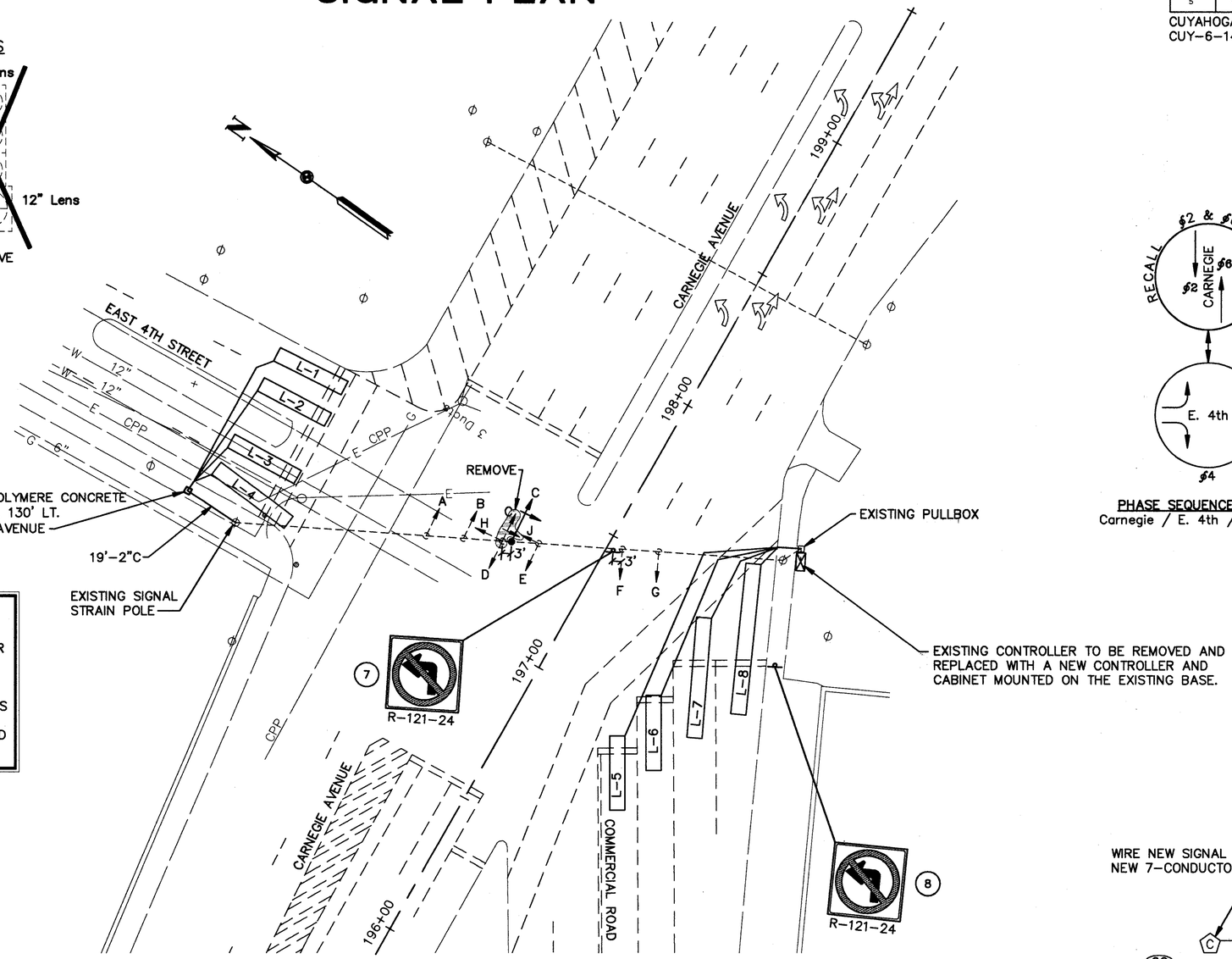

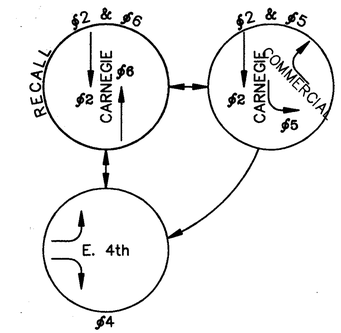

PHASE SEQUENCE DIAGRAM
Carnegie / E. 4th / Commerical

NOTE:

THE SIGNAL WORK SHOWN ON THIS PLAN HAS BEEN PERFORMED UNDER A SEPARATE CONTRACT. THE VETERANS MEMORIAL BRIDGE CONTRACTOR IS RESPONSIBLE FOR IMPLEMENTING THE TIMING PATTERNS SHOWN HERE. COORDINATE THIS WORK WITH THE CITY OF CLEVELAND DIVISION OF TRAFFIC ENGINEERING.

NOTES:

1. REMOVALS:
   –CONTROLLER, CABINET, AND ACCESSORIES
   –4 LENS SIGNAL HEAD C
2. THE CONTRACTOR SHALL REMOVE EXISTING SIGNAL "C" AND REPLACE THE 3–WAY MOUNTING HARDWARE WITH 2–WAY. PAYMENT SHALL BE INCLUDED IN ITEM 614 – MAINTAINING TRAFFIC.
3. THE CONTRACTOR SHALL BE RESPONSIBLE FOR MOUNTING NEW SIGNAL HEADS AND MAINTAINING PROPER CLEARANCE HEIGHTS.
4. THE UNDERGROUND UTILITIES ARE SHOWN ACCORDING TO INFORMATION FURNISHED BY THE UTILITIES CONCERNED. THEIR ACCURACY IS NOT GUARANTEED, THEREFORE THEY SHOULD BE RECHECKED BEFORE UNDERGROUND CONSTRUCTION BEGINS.
5. STATIONING WAS ESTABLISHED FROM RECORD PLANS: GATEWAY CONSTRUCTION PLANS ARE AVAILABLE THROUGH THE CITY OF CLEVELAND DIVISION OF ENGINEERING.

LOOP	# TURNS	STATION	OFFSET	SIZE	HOOK-UP	CALL/DELAY/EXTEND	TYPE	REMARKS
L-1	2	197+52	89'LT	6X25	ϕ4	CALL/EXTEND	PRESENCE	℄ CARNEGIE AVE.
L-2	2	197+40	88'LT	6X25	ϕ4	CALL/EXTEND	PRESENCE	℄ CARNEGIE AVE.
L-3	2	197+18	87'LT	6X25	ϕ4	CALL/EXTEND/5 SEC. DELAY	PRESENCE	℄ CARNEGIE AVE.
L-4	2	197+04	83'LT	6X30	ϕ4	CALL/EXTEND/5 SEC. DELAY	PRESENCE	℄ CARNEGIE AVE.
L-5	2	196+92	27'RT	6X25	ϕ5	CALL/EXTEND/5 SEC. DELAY	PRESENCE	℄ CARNEGIE AVE.
L-6	2	197+09	31'RT	6X25	ϕ5	CALL/EXTEND/5 SEC. DELAY	PRESENCE	℄ CARNEGIE AVE.
L-7	2	197+40	37'RT	6X40	ϕ5	CALL/EXTEND/5 SEC. DELAY	PRESENCE	℄ CARNEGIE AVE.
L-8	2	197+64	43'RT	6X50	ϕ5	CALL/EXTEND/5 SEC. DELAY	PRESENCE	℄ CARNEGIE AVE.

LOOP DETECTOR CHART

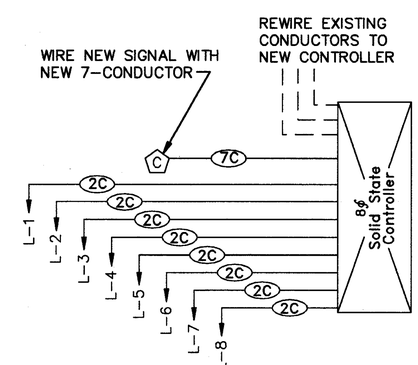

WIRING DIAGRAM

GRAPHIC SCALE
20 0 10 20
HORIZONTAL
SCALE IN FEET

HOWARD NEEDLES TAMMEN & BERGENDOFF
ARCHITECTS ENGINEERS PLANNERS
HNTB

MADE BY: DAK DATE: APRIL 94
DRAWN BY: LML DATE: APRIL 94
CHECKED BY: JPR DATE: APRIL 94
SCALE: AS SHOWN
DSREFX06

CARNEGIE AVE./ EAST 4TH ST./ COMMERICAL RD. SIGNAL PLAN

ONTARIO STREET COORDINATION TIMING

FHWA REGION	STATE	PROJECT	
5	OHIO		

87
412

CUYAHOGA COUNTY
CUY-6-14.99

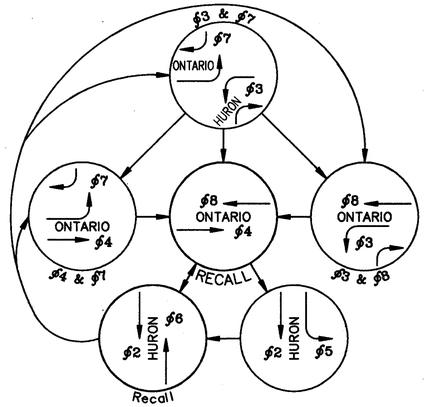

PHASE SEQUENCE DIAGRAM
Ontario / Huron

TIME OF DAY SCHEDULE	AM PEAK 6:00–9:00 AM MON.–FRI.	PM PEAK 3:00–6:00 PM MON.–FRI.	AVERAGE ALL OTHER TIMES
CYCLE LENGTH	120 sec.	120 sec.	90 sec.
OFFSET	53%	9%	26%
PHASE 2 SPLIT	27%	27%	19%
PHASE 3 SPLIT	40%	27%	20%
PHASE 4 SPLIT	33%	32%	46%
PHASE 5 SPLIT	OMIT	14%	15%
PHASE 6 SPLIT	27%	27%	19%
PHASE 7 SPLIT	OMIT	OMIT	14%
PHASE 8 SPLIT	33%	32%	46%

NOTES:
1. PHASE SPLITS SHALL INCLUDE ALL GREEN, YELLOW AND ALL RED INTERVALS.
2. OFFSETS SHALL BE REFERENCED TO THE BEGINNING OF PHASE 4 & 8 GREEN.

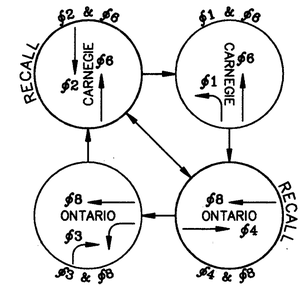

PHASE SEQUENCE DIAGRAM
Carnegie / Ontario

TIME OF DAY SCHEDULE	AM PEAK 6:00–9:00 AM MON.–FRI.	PM PEAK 3:00–6:00 PM MON.–FRI.	AVERAGE ALL OTHER TIMES
CYCLE LENGTH	120 sec.	120 sec.	90 sec.
OFFSET	9%	5%	17%
PHASE 1 SPLIT	36%	12%	15%
PHASE 2 SPLIT	25%	35%	32%
PHASE 3 SPLIT	13%	16%	17%
PHASE 4 SPLIT	26%	37%	36%
PHASE 6 SPLIT	25%	35%	32%
PHASE 8 SPLIT	26%	37%	36%

NOTES:
1. PHASE SPLITS SHALL INCLUDE ALL GREEN, YELLOW AND ALL RED INTERVALS.
2. OFFSETS SHALL BE REFERENCED TO THE BEGINNING OF PHASE 4 & 8 GREEN.

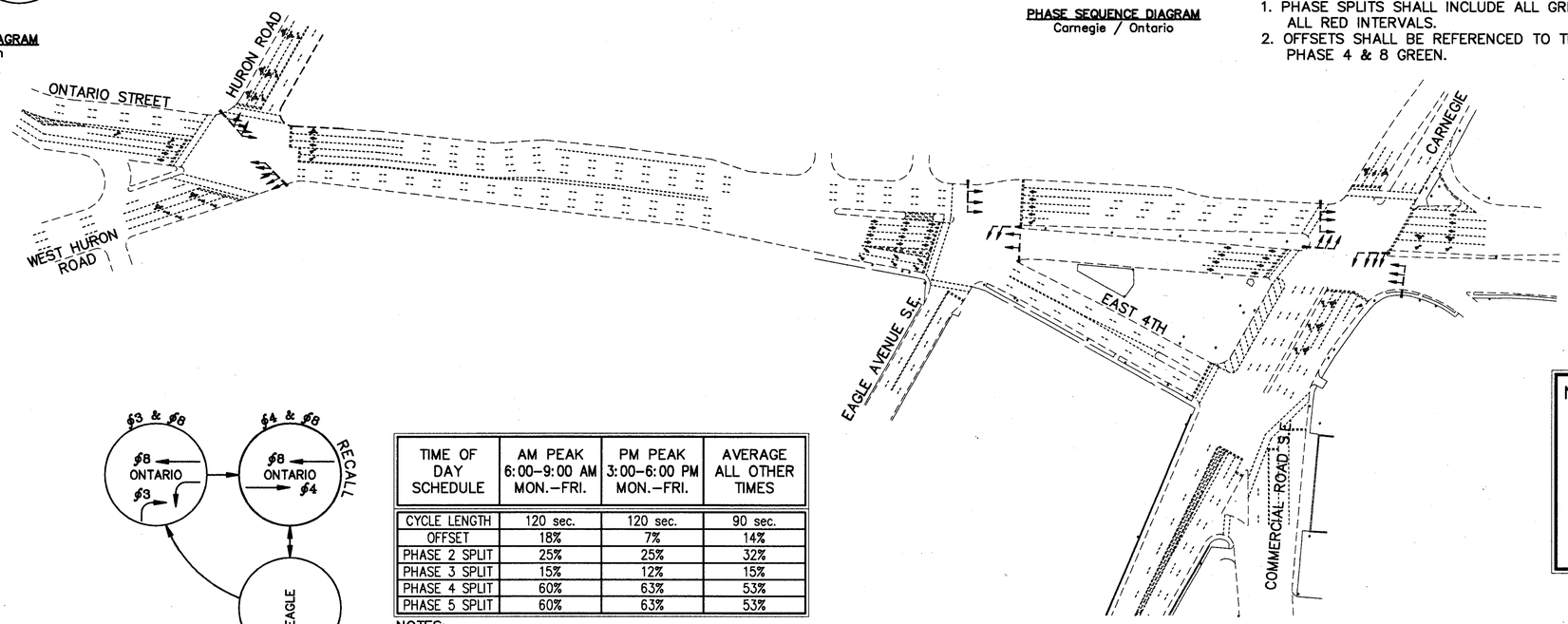

NOTE:

THE SIGNAL WORK SHOWN ON THIS PLAN HAS BEEN PERFORMED UNDER A SEPARATE CONTRACT. THE VETERANS MEMORIAL BRIDGE CONTRACTOR IS RESPONSIBLE FOR IMPLEMENTING THE TIMING PATTERNS SHOWN HERE. COORDINATE THIS WORK WITH THE CITY OF CLEVELAND DIVISION OF TRAFFIC ENGINEERING.

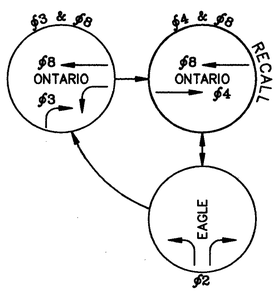

PHASE SEQUENCE DIAGRAM
Eagle / Ontario / E. 4th

TIME OF DAY SCHEDULE	AM PEAK 6:00–9:00 AM MON.–FRI.	PM PEAK 3:00–6:00 PM MON.–FRI.	AVERAGE ALL OTHER TIMES
CYCLE LENGTH	120 sec.	120 sec.	90 sec.
OFFSET	18%	7%	14%
PHASE 2 SPLIT	25%	25%	32%
PHASE 3 SPLIT	15%	12%	15%
PHASE 4 SPLIT	60%	63%	53%
PHASE 5 SPLIT	60%	63%	53%

NOTES:
1. PHASE SPLITS SHALL INCLUDE ALL GREEN, YELLOW AND ALL RED INTERVALS.
2. OFFSETS SHALL BE REFERENCED TO THE BEGINNING OF PHASE 4 & 8 GREEN.

NOTE:

ACTIVATION OF THE TIMING ON THIS SHEET IS TO BE COORDINATED WITH THE CITY OF CLEVELAND DIVISION OF TRAFFIC AND CAN BE MODIFIED AS NECESSARY PRIOR TO THE IMPLEMENTATION OF THE DETOUR.

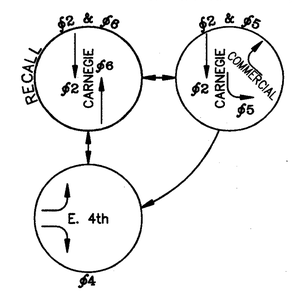

PHASE SEQUENCE DIAGRAM
Carnegie / E. 4th / Commerical

TIME OF DAY SCHEDULE	AM PEAK 6:00–9:00 AM MON.–FRI.	PM PEAK 3:00–6:00 PM MON.–FRI.	AVERAGE ALL OTHER TIMES
CYCLE LENGTH	120 sec.	120 sec.	90 sec.
OFFSET	68%	52%	58%
PHASE 2 SPLIT	66%	45%	62%
PHASE 4 SPLIT	21%	42%	23%
PHASE 5 SPLIT	13%	13%	15%
PHASE 6 SPLIT	66%	45%	62%

NOTES:
1. PHASE SPLITS SHALL INCLUDE ALL GREEN, YELLOW AND ALL RED INTERVALS.
2. OFFSETS SHALL BE REFERENCED TO THE BEGINNING OF PHASE 2 & 6 GREEN.

GRAPHIC SCALE
100 0 50 100
HORIZONTAL SCALE IN FEET

HOWARD NEEDLES TAMMEN & BERGENDOFF
ARCHITECTS ENGINEERS PLANNERS
HNTB

MADE BY: ZSS DATE: FEB 94
DRAWN BY: LML DATE: FEB 94
CHECKED BY: JPR DATE: FEB 94
SCALE: 1"=100'
DSREFX02

ONTARIO STREET COORDINATION TIMING

VETERANS MEMORIAL BRIDGE DETOUR PLAN

FHWA REGION	STATE	PROJECT	
5	OHIO		

88
412

CUYAHOGA COUNTY
CUY-6-14.99

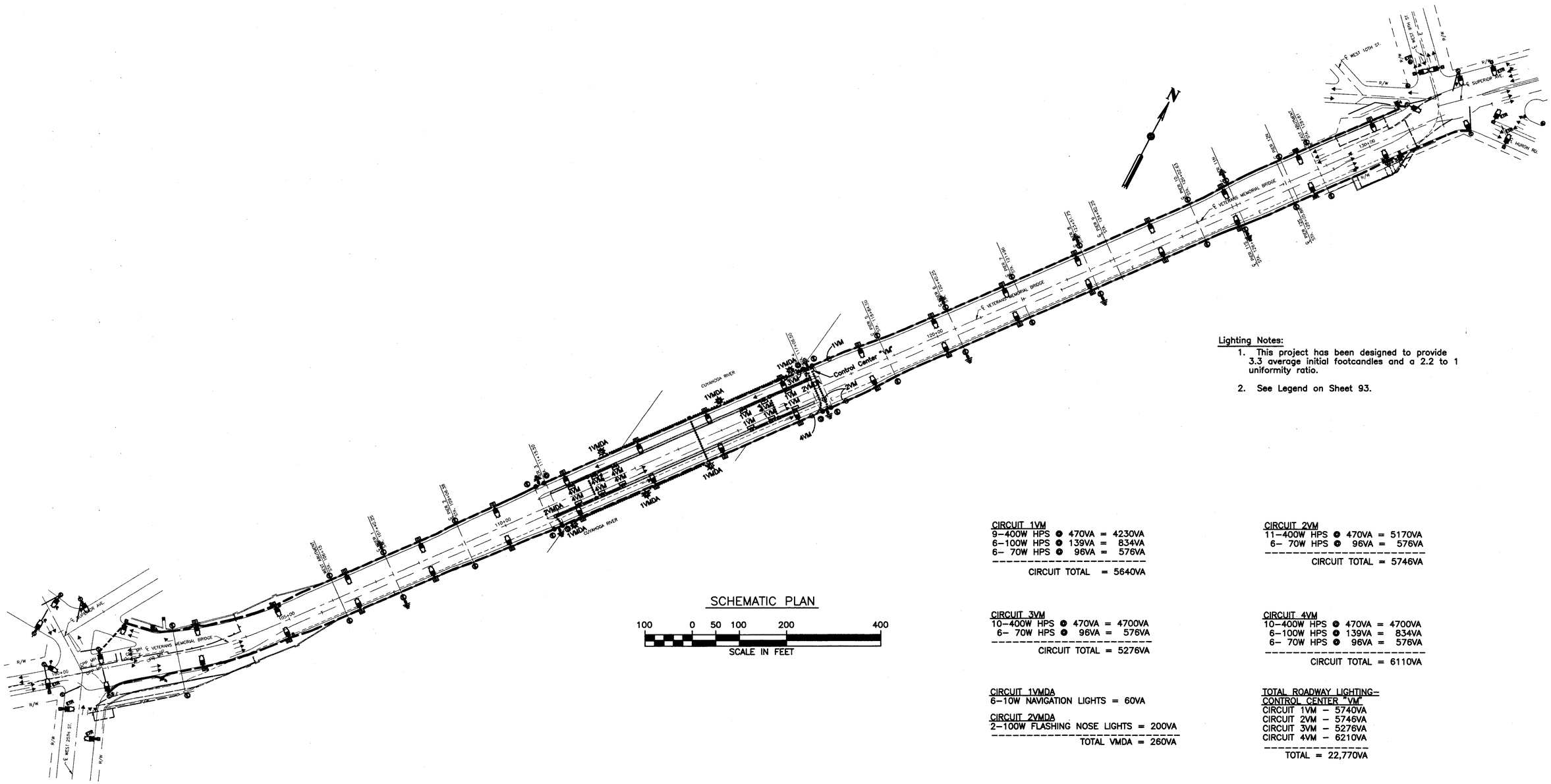

SCHEMATIC PLAN

100 0 50 100 200 400
SCALE IN FEET

Lighting Notes:

1. This project has been designed to provide 3.3 average initial footcandles and a 2.2 to 1 uniformity ratio.
2. See Legend on Sheet 93.

CIRCUIT 1VM
9-400W HPS @ 470VA = 4230VA
6-100W HPS @ 139VA = 834VA
6- 70W HPS @ 96VA = 576VA
CIRCUIT TOTAL = 5640VA

CIRCUIT 2VM
11-400W HPS @ 470VA = 5170VA
6- 70W HPS @ 96VA = 576VA
CIRCUIT TOTAL = 5746VA

CIRCUIT 3VM
10-400W HPS @ 470VA = 4700VA
6- 70W HPS @ 96VA = 576VA
CIRCUIT TOTAL = 5276VA

CIRCUIT 4VM
10-400W HPS @ 470VA = 4700VA
6-100W HPS @ 139VA = 834VA
6- 70W HPS @ 96VA = 576VA
CIRCUIT TOTAL = 6110VA

CIRCUIT 1VMDA
6-10W NAVIGATION LIGHTS = 60VA

CIRCUIT 2VMDA
2-100W FLASHING NOSE LIGHTS = 200VA
TOTAL VMDA = 260VA

TOTAL ROADWAY LIGHTING-CONTROL CENTER "VM"
CIRCUIT 1VM - 5740VA
CIRCUIT 2VM - 5746VA
CIRCUIT 3VM - 5276VA
CIRCUIT 4VM - 6210VA
TOTAL = 22,770VA

HOWARD NEEDLES TAMMEN & BERGENDOFF
ARCHITECTS ENGINEERS PLANNERS
HNTB

MADE BY: F.E.G. DATE: 12/6/93
DRAWN BY: P.J.K. DATE: 12/7/93
CHECKED BY: N.C.Y. DATE:
SCALE: 1"=100'

11646/SCHEM 1=1200

LIGHTING SCHEMATIC

LIGHTING GENERAL NOTES

1. SCOPE OF WORK
   A. THE CONTRACTOR SHALL REMOVE EXISTING LIGHTING FACILITIES FROM VETERANS MEMORIAL BRIDGE. INSTALL NEW LIGHTING FACILITITES ON THE REHABILITATED BRIDGE AS INDICATED ON THE PLANS OR DIRECTED BY THE ENGINEER. THIS WORK SHALL BE PROPERLY COMPLETED, INCLUDING INCIDENTALS, AS SHOWN ON THE DRAWINGS AND HEREINAFTER SPECIFIED.

   B. ALL WORK IN THIS CONTRACT SHALL CONFORM TO THE LATEST NATIONAL ELECTRIC SAFETY CODE AND OSHA, EXCEPT WHERE LOCAL REGULATIONS ARE MORE STRINGENT, IN WHICH CASE LOCAL REGULATIONS SHALL GOVERN.

   C. THE MAJOR ITEMS TO BE FURNISHED AND INSTALLED BY THIS CONTRACTOR SHALL BE AS FOLLOWS:

      1. NEW LIGHT POLES, BRACKET ARMS AND LUMINAIRES ON VETERANS MEMORIAL BRIDGE.

      2. NEW ORNAMENTAL LIGHTING UNITS ON THE VETERANS MEMORIAL BRIDGE.

      3. NEW DECORATIVE LIGHTS ON VETERANS MEMORIAL BRIDGE. (SEE DECORATIVE LIGHTING PLANS)

      4. NEW UNDERPASS LIGHTS ON VETERANS MEMORIAL BRIDGE.

      5. NEW NAVIGATION LIGHTS ON VETERANS MEMORIAL BRIDGE.

      6. REMOVAL OF EXISTING VETERANS MEMORIAL BRIDGE LIGHTING UNITS.

      7. GROUNDING.

2. STATUS OF CITY INSPECTOR
   INSPECTORS AS DESIGNATED BY THE CITY OF CLEVELAND SHALL BE AUTHORIZED TO INSPECT ALL WORK DONE AND MATERIALS FURNISHED. SUCH INSPECTING MAY EXTEND TO ALL OR ANY PART OF THE WORK. AND TO THE PREPARATION OR MANUFACTURE OF THE MATERIALS TO BE USED IN THE WORK. CITY INSPECTORS SHALL NOTIFY THE ENGINEER BEFORE COMMENCING THE INSPECTION, FOLLOW SAFETY RULES AS DIRECTED BY THE ENGINEER, REPORT FINDINGS TO AND MAKE REQUESTS FOR ACTION BY THE CONTRACTOR THROUGH THE ENGINEER.

3. LUMINAIRES
   LUMINAIRES SHALL BE RATED 240 VOLT, 400 WATT INTEGRAL REGULATOR BALLAST FOR USE WITH HIGH PRESSURE SODIUM LAMPS AND SHALL BE GENERAL ELECTRIC M400A CUTOFF OR AMERICAN ELECTRIC SERIES 25/26 HORIZONTAL CUTOFF OR EQUAL APPROVED BY THE ENGINEER.

   NOTE: THE FOLLOWING ACCESSORIES IN DESIGNATED LUMINAIRES: TWISTLOCK PHOTOELECTRIC CONTROL RECEPTACLES AND PHOTOELECTRIC CELL.

4. ORNAMENTAL LUMINAIRES
   ORNAMENTAL LIGHTS AND POLES SHALL BE INSTALLED AS PER PLAN. LUMINAIRES SHALL BE THE "CLEVELAND STANDARD 'HERITAGE LUMINAIRE' " AS MANUFACTURED BY LAMPLIGHT INDUSTRIES OR EQUAL. INTEGRAL HIGH PRESSURE SODIUM BALLASTS SHALL BE OF REGULATOR TYPE RATED FOR 240 VOLTS, 70 WATTS. POLE FINISH SHALL BE PRATT & LAMBERT #2224 GRAPHITE. APPROVED EQUAL MANUFACTURER FOR ORNAMENTAL LUMINAIRES AND POLES IS UNIQUE SOLUTIONS. 16'-HIGH QUAD UNIT-NO. NY16/20-CIS-PP-CSC 30/4-CA/PP-4-AR70HP24 A63-GVIA 73A. RAILING MOUNTED UNIT-NO. NY8/17-C1-PP-AR70HP24 A63-GVIA 73A. IF THE UNIQUE SOLUTIONS LIGHTING UNIT IS SELECTED, ANCHOR BOLT DETAILS SHALL BE REVISED AND SUBMITTED TO THE ENGINEER FOR APPROVAL.

5. UNDERPASS LUMINAIRES
   UNDERPASS LUMINAIRES SHALL BE HOLOPHANE "UNDERPASS WALLPACK" OR GENERAL ELECTRIC WL-250 UNDERPASS UNIT OR EQUAL APPROVED BY THE ENGINEER. AND SHALL BE FURNISHED WITH AN INTEGRAL FUSE HOLDER AND 10 AMPERE FUSE. THE INTEGRAL HIGH PRESSURE SODIUM BALLAST SHALL BE OF A REGULATOR TYPE, RATED FOR 240 VOLTS, 100 WATTS.

6. LAMPS-HIGH PRESSURE SODIUM
   SUPPLEMENTING 713.14 OF THE SPECIFICATIONS, HIGH PRESSURE SODIUM (HPS) LAMPS SHALL BE OF THE WATTAGE INDICATED IN THE PLANS AND SHALL BE GENERAL ELECTRIC "LUCALOX", PHILIPS "CERAMALUX", SYLVANIA "LUMALUX" OR EQUAL AS APPROVED BY THE ENGINEER.

7. NAVIGATION LIGHTS
   EXISTING NON-OPERATIONAL NAVIGATION LIGHTS SHALL BE REMOVED AND NEW NAVIGATION LIGHTS INSTALLED AS PER PLAN. PROVIDE CENTER AND SIDE CHANNEL MARKER LIGHTS AS SHOWN ON THE PLANS, AS MANUFACTURED BY TIDELAND SIGNAL CORPORATION OR EQUAL MANUFACTURED BY B & B ELECTRONIC CORPORATION OR AUTOMATIC POWER INC.

8. DRAINS FOR PULL BOXES
   REFERENCE IS MADE TO THE STANDARD DRAWINGS FOR DETAILS OF DRAINING PULL BOXES. DRAINS FOR PULL BOXES SHALL BE USED AS DIRECTED BY THE ENGINEER AND SHALL BE PROVIDED WHERE THE LENGTH REQUIRED FOR SATISFACTORY OUTLET DOES NOT EXCEED APPROXIMATELY 20 FEET. AN ESTIMATED QUANTITY 60 LINEAR FEET OF ITEM 603 "4" CONDUIT, TYPE E" IS INCLUDED IN THE LIGHTING GENERAL SUMMMARY FOR THIS PURPOSE.

9. CONDUIT ON STRUCTURE
   A. EXPANSION FITTINGS FOR RIGID STEEL CONDUIT ON STRUCTURE SHALL BE OZ (TYPE AX-8), CROUSE-HINDS (TYPE XJ-8), APPLETON (TYPE XJ-8) OR EQUAL APPROVED BY THE ENGINEER.

   B. EACH EXPANSION FITTING SHALL HAVE A COPPER EXTERNAL BONDING JUMPER.

   C. EXPANSION FITTINGS FOR PVC SCHEDULE 40 CONDUIT SHALL BE AS PER PLAN.

10. HAZARDOUS MATERIALS
    NO MATERIAL FURNISHED UNDER THIS SPECIFICATION SHALL CONTAIN POLYCHLORINATED BIPHENYLS (PCBS). TRANSFORMERS BALLASTS AND CAPACITORS SHALL BE MARKED "NO PCBS" IN ACCORDANCE WITH FEDERAL ENVIRONMENTAL PROTECTION AGENCY REGULATION 40 CFR 761.

11. POWER SERVICE
    CLEVELAND PUBLIC POWER (CPP) SHALL PROVIDE 120/240V, 3 WIRE SECONDARY SERVICE FROM A PAD MOUNT TRANSFORMER AS PER PLAN. THE CONTRACTOR SHALL PROVIDE THE PRIMARY AND SECONDARY DUCTS, SECONDARY CONDUCTORS, ELEVATED TRANSFORMER PAD AND CONTROL CENTER AS SHOWN ON THE DECORATIVE LIGHTING PLANS.

    AT COMBINATION TRAFFIC/LIGHTING POLES WITH LUMINAIRES OPERATED BY PHOTO CELL, THE CONTRACTOR SHALL STUB-OUT 2" CONDUIT FROM PULL BOX AND COIL 10' OF CONDUCTOR FOR FINAL CONNECTION BY CPP.

12. PULL BOXES AND JUNCTION BOXES
    STRUCTURE MOUNTED JUNCTION BOXES SHALL BE SAME STYLE AND STRENGTH AS SHOWN ON STANDARD CONSTRUCTION DRAWING HL-20.14, BUT SHALL BE CONSTRUCTED OF NON-CONDUCTING MATERIAL, AND SHALL MEET OR EXCEED REQUIREMENTS OF 713.081. BOXES SHALL BE AS MANUFACTURED BY CARLON, QUAZITE COMPOSOLITE, OR EQUAL.

    JUNCTION BOXES SHALL BE CONSTRUCTED OF NON-CONDUCTING MATERIAL AS JUNCTION BOXES ABOVE, AND OF APPROPRIATE DIMENSIONS AS INDICATED ON THE PLANS.

    TUNNEL MOUNTED JUNCTION BOXES SHALL BE SUITABLE FOR MOUNTING ON CEILING OF LOWER DECK AND/OR TUNNEL.

13. DISCONNCTION OF EXISTING CIRCUIT(S)
    EXISTING PROJECT LIGHTING IS PRESENTLY POWERED BY THE CPP OVERHEAD LINES. COORDINATE DISCONNECTION OF EXISTING CIRCUIT(S) WITH CPP BEFORE PROCEEDING WITH ANY REMOVALS.

FHWA REGION	STATE	PROJECT	
5	OHIO		

90
412

CUYAHOGA COUNTY
CUY-6-14.99

LIGHTING QUANTITIES GENERAL SUMMARY

LINE NUMBER	STRUCTURES								ROADWAY							COST PARTICIPATION			ITEM	ITEM EXT.	GRAND TOTAL	UNIT	DESCRIPTION	LINE NUMBER
				CUY-6-14.99	CUY-6-14.99																			
	SHEET NO.								SHEET NO.															
				91	92						91		92											
	PARTICIPATION								PARTICIPATION							NORMAL PROJECT	100% CITY							
1																								1
2					28								11						202	75401	39	EACH	LIGHT POLE REMOVED, AS PER PLAN	2
3													10						202	75501	10	EACH	LIGHT POLE FOUNDATION REMOVED, AS PER PLAN	3
4					28								14						202	98100	42	EACH	REMOVAL MISCELLANEOUS: LUMINAIRE AND BRACKET ARM REMOVED, AS PER PLAN	4
5					12														202	98100	12	EACH	REMOVAL MISCELLANEOUS: UNDERPASS LIGHT REMOVED, AS PER PLAN	5
6					6														202	98100	6	EACH	REMOVAL MISCELLANEOUS: NAVIGATION LIGHT REMOVED, AS PER PLAN	6
7													2						202	98100	2	EACH	REMOVAL MISCELLANEOUS: FLOODLIGHTS REMOVED, AS PER PLAN	7
8																								8
9																								9
10																60			603	00400	60	L.F.	4" CONDUIT, TYPE E	10
11				84							18								625	00500	102	EACH	CONNECTOR KIT, TYPE II	11
12																								12
13																								13
14				32							1								625	10500	33	EACH	LIGHT POLE, MISC, DESIGN A10B35, AS PER PLAN	14
15											4								625	10500	4	EACH	LIGHT POLE, MISC, DESIGN CLEVELAND STANDARD A3BBBB16, AS PER PLAN	15
16				8															625	10500	8	EACH	LIGHT POLE, MISC, DESIGN CLEVELAND STANDARD A0N8,	16
17																							RAILING MOUNTED, AS PER PLAN	17
18				128															625	10620	128	EACH	LIGHT POLE ANCHOR BOLT, MISC; AS PER PLAN	18
19				24							12								625	10620	36	EACH	ORNAMENTAL LIGHT POLE ANCHOR BOLT, AS PER PLAN	19
20											1								625	14000	1	EACH	LIGHT POLE FOUNDATION, 24" X 6' DEEP	20
21											2								625	14501	2	EACH	LIGHT POLE FOUNDATION, AS PER PLAN	21
22																								22
23																								23
24				2							9								625	18000	11	EACH	BRACKET ARM, 10'	24
25				10,240							1,680								625	23200	11,920	L.F.	NO. 4 AWG 5000 VOLT DISTRIBUTION CABLE	25
26				3,000															625	23300	3,000	L.F.	NO. 2 AWG 5000 VOLT DISTRIBUTION CABLE	26
27				6,120							875								625	23302	6,995	L.F.	NO. 6 AWG 5000 VOLT DISTRIBUTION CABLE	27
28				5,080															625	23308	5,080	L.F.	DISTRIBUTION CABLE, MISC. NO. 8 AWG 5000 VOLT	28
29				3,760							1,240								625	23400	5,000	L.F.	NO. 10 AWG POLE AND BRACKET CABLE	29
30																								30
31																								31
32				1100							330						1,430		625	25102	1,430	L.F.	CONDUIT 1" 713.07	32
33				1,475															625	25200	1,475	L.F.	CONDUIT 1 1/4", 713.04	33
34											90								625	25500	90	L.F.	CONDUIT 3", 713.04	34
35				11000							1920					6,460	6,460		625	25803	12,920	L.F.	CONDUIT CONCRETE ENCASED, AS PER PLAN, SIZE:2"	35
36																								36
37																								37
38				12															625	27500	12	EACH	LUMINAIRE, UNDERPASS, 100W HIGH PRESSURE SODIUM, 240V, 713.13	38
39																								39
40											5								625	27600	5	EACH	LUMINAIRE, MISC., TYPE III MC 400W HPS, 240V WITH PHOTO CELL, AS PER PLAN	40
41				34							4								625	27600	38	EACH	LUMINAIRE, MISC, TYPE III MC 400W HPS, 240V, AS PER PLAN	41
42				8							16								625	27600	24	EACH	LUMINAIRE, MISC, 70W HIGH PRESSURE SODIUM, 240 VOLT, AS PER PLAN	42
43																								43
44																								44
45																								45
46				44															625	29921	44	EACH	STRUCTURE JUNCTION BOX, AS PER PLAN	46
47				4							14								625	31600	18	EACH	PULL BOX, MISC., CLEVELAND STANDARD AS PER PLAN	47
48					1														625	33000	1	EACH	STRUCTURE GROUNDING SYSTEM	48
49																								49
50					1														625	34001	1	EACH	POWER SERVICE, AS PER PLAN	50
51																								51
52					1														625	38000	LUMP	LUMP	HIGH VOLTAGE TEST	52
53				2															625	98000	2	EACH	LIGHTING MISC., REMOUNT FLOODLIGHTS ON NEW POLE	53
54																								54
55					4														625	98000	4	EACH	LIGHTING MISC.; PIVOT TYPE SIDE CHANNEL MARKER LIGHT, 180°, RED FRESNEL LENS	55
56					2														625	98000	2	EACH	LIGHTING MISC.; PIVOT TYPE CENTER CHANNEL MARKER LIGHT, 360°, GREEN FRESNEL LENS	56
57																								57
58																								58
59																								59
60																								60

HOWARD NEEDLES TAMMEN & BERGENDOFF
ARCHITECTS ENGINEERS PLANNERS
HNTB

MADE BY: F.E.G. DATE: 4/12/94
DRAWN BY: P.J.K. DATE: 4/15/94
CHECKED BY: N.C.Y. DATE: -/--/--
SCALE: None

11846/LTQSGSM 1=1

FHWA REGION	STATE	PROJECT	
5	OHIO		

91
412

CUYAHOGA COUNTY
CUY-6-14.99

LIGHTING QUANTITIES SUB-SUMMARY

LINE NUMBER	STATION*	STATION*	SIDE	CONNECTOR KIT, TYPE II	LIGHT POLE, MISC, DESIGN A10B35, AS PER PLAN	LIGHT POLE, MISC, DESIGN CLEVELAND STANDARD DESIGN A3BBBB16, AS PER PLAN	LIGHT POLE, MISC, DESIGN CLEVELAND STANDARD A0N8, RAILING MOUNTED, AS PER PLAN	ROADWAY LIGHT POLE ANCHOR BOLT, AS PER PLAN	ORNAMENTAL LIGHT POLE ANCHOR BOLT, AS PER PLAN	ROADWAY LIGHT POLE FOUNDATION 24" X 6' DEEP	ORNAMENTAL LIGHT POLE FOUNDATION, MISC., AS PER PLAN	BRACKET ARM, 10', AS PER PLAN	NO. 4 AWG 5000V DISTRIBUTION CABLE	NO. 2 AWG 5000V DISTRIBUTION CABLE	NO. 6 AWG 5000V DISTRIBUTION CABLE	NO. 8 AWG 5000V DISTRIBUTION CABLE	NO. 10 AWG POLE AND BRACKET CABLE	CONDUIT 3", 713.04	CONDUIT 1 1/4", 713.04	CONDUIT 2", SCH. 40 PVC CONCRETE ENCASED AS PER PLAN	CONDUIT 1", (SCH. 40) PVC, 713.07	LUMINAIRE, UNDERPASS, 100W HIGH PRESSURE SODIUM, 240V, 713.13	REMOUNT FLOODLIGHTS ON NEW POLE	LUMINAIRE, MISC, TYPE III MC 400W HPS, 240V WITH PHOTO CELL, AS PER PLAN	LUMINAIRE, MISC, TYPE III MC 400W HPS, 240V, AS PER PLAN	LUMINAIRE, MISC, (ORNAMENTAL), 70W HIGH PRESSURE SODIUM, 240V, AS PER PLAN	STRUCTURE (MOUNTED) JUNCTION BOX AS PER PLAN	PULL BOX, MISC. CLEVELAND STANDARD AS PER PLAN				LINE NUMBER
				625																													
				EACH	EACH	EACH	EACH	EACH	EACH	EACH	EACH	EACH	L.F.	L.F.	L.F.	L.F.	L.F.	L.F.	L.F.	L.F.	L.F.	EACH	EACH	EACH	EACH	EACH	EACH	EACH				
1	SHEET 93																																1
2	21+72℄ W.25		RT.									1					100				30			1				1					2
3	21+91℄ W.25		LT.									1					100				30			1				1					3
4	21+50℄ W.25		RT.									1					100				30			1				1					4
5	99+67		LT.									1					100				30			1				1					5
6	100+88	101+55	LT.	2								1	190		100		100	90			30				1			1					6
7	101+55	102+10	LT.	2	1					1			120		65		100			220	30				1			1					7
8	100+89	102+10	RT.	2								1	530		270		100			520	30							1					8
9	102+10	103+00	LT.	2		1			3		1		200		105		60			380	15					4		1					9
10	102+10	103+00	RT.	2		1			3				200		105		60			380	15					4		1					10
11																																	11
12	** BRIDGE	CUY-6-14.99	LT. RT.	84	32		8	128	24			2	10,240	3,000	6,120	5,080	3,760		1,475	11,000	1,100	12	2		34	8	44	4					12
13																																	13
14	130+93	103+09	LT.	2		1			3		1		90		50		60			80	15					4		1					14
15	130+49	0+42℄ SUPERIOR	RT.	2		1			3				350		180		60			340	15					4		1					15
16	131+09		LT.	2								1					100				30				1			1					16
17	0+42℄ SUPERIOR		RT.	2								1					100				30				1			1					17
18																																	18
19	0+48℄ SUPERIOR		RT.									1					100							1				1					19
20																																	20
21	TOTAL	SHEET 93		102	33	4	8	128	36	1	2	11	11,920	3,000	6,995	5,080	5,000	90	1,475	12,920	1,430	12	2	5	38	24	44	18					21
22																																	22
23																																	23
24																																	24
25																																	25
26																																	26
27																																	27
28																																	28
29																																	29
30																																	30
31																																	31
32																																	32
33																																	33
34																																	34
35																																	35
36																																	36
37																																	37
38																																	38
39																																	39
40																																	40
41																																	41
42																																	42
43																																	43
44																																	44
45																																	45
46																																	46
47																																	47
48																																	48
49																																	49
50																																	50
51																																	51
52																																	52
53																																	53
54																																	54
55	TOTAL			102	33	4	8	128	36	1	2	11	11,920	3,000	6,995	5,080	5,000	90	1,475	12,920	1,430	12	2	5	38	24	44	18					55

HOWARD NEEDLES TAMMEN & BERGENDOFF
ARCHITECTS ENGINEERS PLANNERS
HNTB

MADE BY: F.E.G. DATE: 4/12/94
DRAWN BY: P.J.K. DATE: 4/15/94
CHECKED BY: M.C.Y. DATE:
SCALE: None

*ALL STATIONS

℄ OF VETERANS MEMORIAL BRIDGE UNLESS NOTED.

**BRIDGE: FROM STA. 103+00.01 LT.
TO STA. 130+92.99 LT.
FROM STA. 103+00.01 RT.
TO STA. 130+50.99 RT.

11646/LTSUBSUM 1=1

LIGHTING QUANTITIES SUB-SUMMARY

FHWA REGION	STATE	PROJECT	
5	OHIO		

92
412

CUYAHOGA COUNTY
CUY-6-14.99

LIGHTING QUANTITIES SUB-SUMMARY

LINE NUMBER	STATION*	STATION*	SIDE	625 STRUCTURE GROUNDING SYSTEM EACH	625 POWER SERVICE AS PER PLAN LUMP	625 HIGH VOLTAGE TEST LUMP	SPECIAL LIGHTING MISC.; PIVOT TYPE SIDE CHANNEL MARKER LIGHT, 180° RED FRESNEL LENS EACH	SPECIAL LIGHTING MISC.; PIVOT TYPE CENTER CHANNEL MARKER LIGHT, 360° GREEN FRESNEL LENS EACH
1	SHEET 93							
2	21+72,℄ W.25		RT.					
3	21+91,℄ W.25		LT.					
4	21+50,℄ W.25		RT.					
5	99+67		LT.					
6	100+88	101+55	LT.					
7	101+55	102+10	LT.					
8	100+89	102+10	RT.					
9	102+10	103+00	LT.					
10	102+10	103+00	RT.					
11								
12	**BRIDGE	CUY-6-14.99	LT./RT.	1	1	1	4	2
13								
14	130+93	103+09	LT.					
15	130+49	0+42℄ SUPERIOR	RT.					
16	131+09		LT.					
17	0+42℄ SUPERIOR		RT.					
18								
19	0+48℄ SUPERIOR		RT.					
20								
21	TOTAL	SHEET 93		1	1	1	4	2
22								
23								
24								
25								
26								
27								
28	SHEET 94							
29	21+21℄ W. 25		LT.					
30	21+50℄ W. 25		RT.					
31	100+88	106+15	LT.					
32	100+89	106+15	RT.					
33	101+55		LT.					
34								
35	BRIDGE **	CUY-6-14.99	LT./RT.					
36								
37	129+50	130+73	LT.					
38	127+50	129+91	RT.					
39	0+48℄ SUPERIOR		LT.					
40	131+81		RT.					
41								
42	TOTAL	SHEET 94						
43								
44								
45								
46								
47								
48								
49								
50								
51								
52								
53								
54								
55	TOTAL			1	1	1	4	2

LIGHTING REMOVAL QUANTITIES SUB-SUMMARY

LINE NUMBER	202 LIGHT POLE REMOVED, AS PER PLAN EACH	202 LUMINAIRE AND BRACKET ARM REMOVED, AS PER PLAN EACH	202 LIGHT POLE FOUNDATION REMOVED, AS PER PLAN EACH	202 UNDERPASS LIGHT REMOVED, AS PER PLAN EACH	202 NAVIGATION LIGHT REMOVED, AS PER PLAN EACH	202 FLOODLIGHTS REMOVED, AS PER PLAN EACH
1						
2						
3						
4						
5						
6						
7						
8						
9						
10						
11						
12						
13						
14						
15						
16						
17						
18						
19						
20						
21						
22						
23						
24						
25						
26						
27						
28						
29	1	1	1			
30	1	1	1			
31	4	4	4			
32	3	3	3			
33		1				
34						
35	28	28		12	6	
36						
37	1	1				
38	1	1	1			2
39		1				
40		1				
41						
42	39	42	10	12	6	2
43						
44						
45						
46						
47						
48						
49						
50						
51						
52						
53						
54						
55	39	42	10	12	6	2

**BRIDGE: FROM STA. 103+00.01 LT.
TO STA. 130+92.99 LT.
FROM STA. 103+00.01 RT.
TO STA. 130+50.99 RT.

HOWARD NEEDLES TAMMEN & BERGENDOFF
ARCHITECTS ENGINEERS PLANNERS HNTB

MADE BY: F.E.G. DATE: 4/12/94
DRAWN BY: P.J.K. DATE: 4/15/94
CHECKED BY: N.C.Y. DATE:
SCALE: None

11646/LTSUBSUM 1=1

FHWA REGION	STATE	PROJECT	
5	OHIO		

93
412

CUYAHOGA COUNTY
CUY-6-14.99

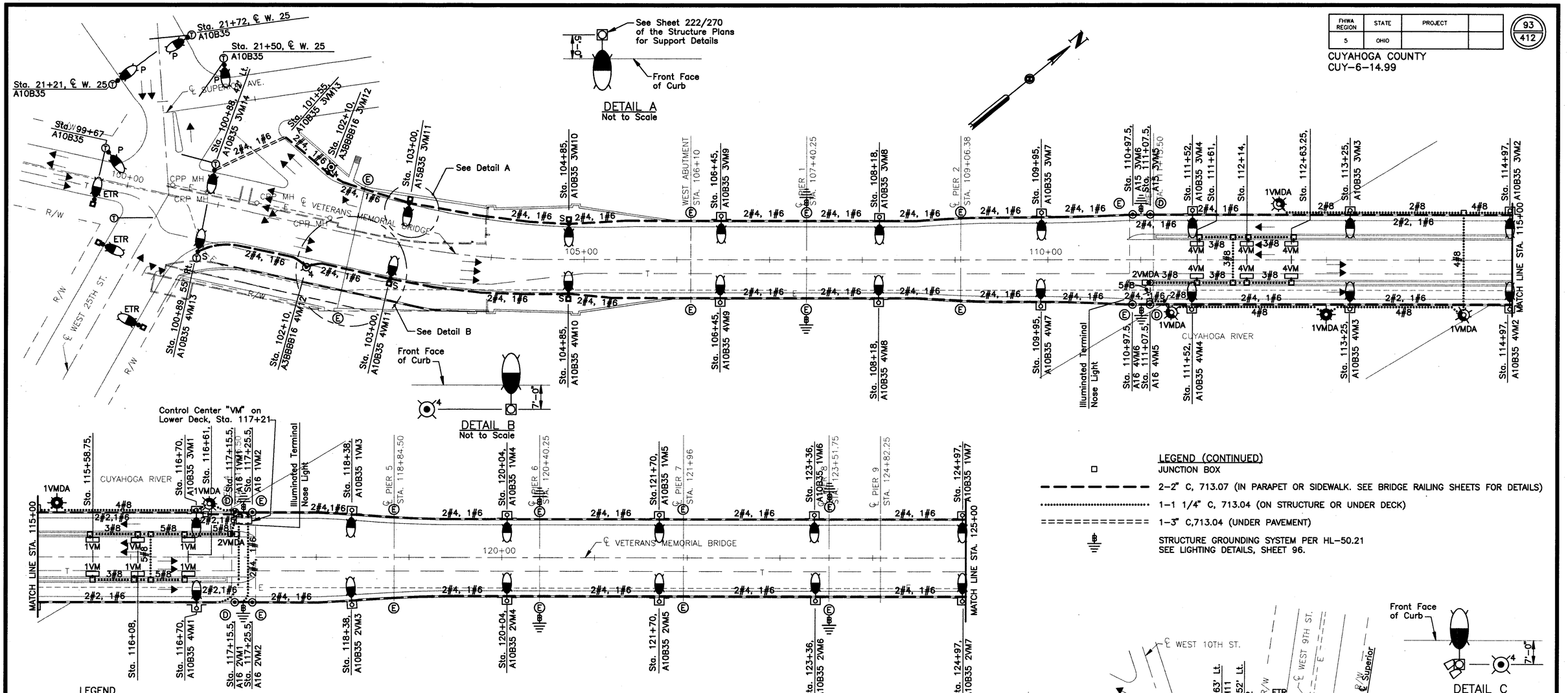

LEGEND (CONTINUED)

- JUNCTION BOX
- 2-2" C, 713.07 (IN PARAPET OR SIDEWALK. SEE BRIDGE RAILING SHEETS FOR DETAILS)
- 1-1 1/4" C, 713.04 (ON STRUCTURE OR UNDER DECK)
- 1-3" C,713.04 (UNDER PAVEMENT)
- STRUCTURE GROUNDING SYSTEM PER HL-50.21 SEE LIGHTING DETAILS, SHEET 96.

LEGEND

- STRUCTURE MOUNTED LIGHTING UNIT: HIGH PRESSURE SODIUM LAMP 400W. TYPE III MC DISTRIBUTION
- GROUND MOUNTED LIGHTING UNIT: HIGH PRESSURE SODIUM LAMP 400W. TYPE III MC DISTRIBUTION. S = STRUCTURE MOUNTED P = PHOTOCELL
- COMBINATION TRAFFIC SIGNAL WITH MAST ARM OR SPAN WIRE AND 400W HPS LUMINAIRE, TYPE III MC DISTRIBUTION. POWER FROM CPP ROADWAY LIGHTING CIRCUIT. SEE DETAIL ON SHEET 95 S = STRUCTURE MOUNTED
- ETR — EXISTING LIGHTING UNIT TO REMAIN
- Ⓐ — EXISTING ANTIQUE STYLE LIGHTING UNIT. 250W HIGH PRESSURE SODIUM 18' MOUNTING HEIGHT
- RAILING MOUNTED DECORATIVE LIGHTING: CLEVELAND STANDARD. HIGH PRESSURE SODIUM LAMP 70W (SEE DETAIL)
- GROUND MOUNTED DECORATIVE LIGHTING: CLEVELAND STANDARD WITH 4 ARMS AT 90°. HIGH PRESSURE SODIUM LAMP 70W (SEE DETAIL)
- 100W HIGH PRESSURE SODIUM UNDERPASS LIGHTING UNIT MOUNTED ON VERTICAL STEEL POST OF STRUCTURE
- PULL BOX, AS PER PLAN
- •B — PULL BOX, AS PER PLAN B = MOUNTED BELOW ON TUNNEL OR LOWER DECK CEILING
- ILLUMINATED TERMINAL NOSE LIGHT
- NAVIGATION LIGHT, 360°
- NAVIGATION LIGHT, 180°
- Ⓔ — EXPANSION JOINT FITTING
- Ⓓ — EXPANSION AND DEFLECTION JOINT FITTING

(LEGEND CONTINUED AT RIGHT)

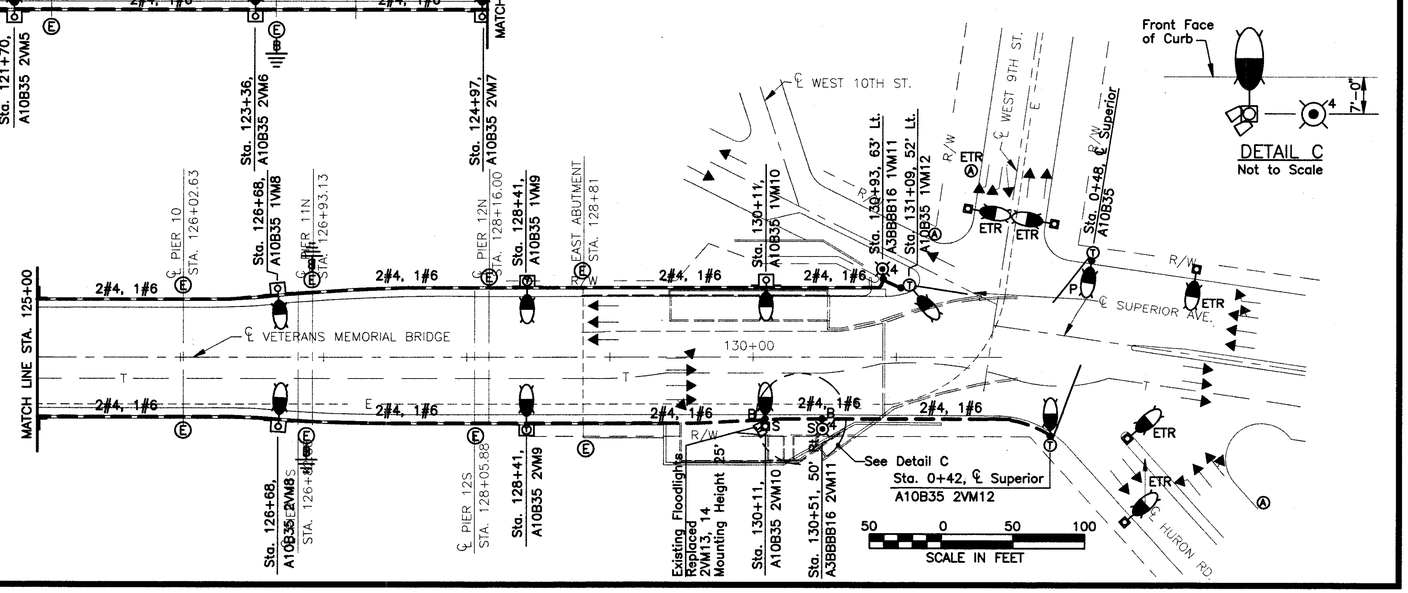

HOWARD NEEDLES TAMMEN & BERGENDOFF
ARCHITECTS ENGINEERS PLANNERS
HNTB

MADE BY: F.E.G. DATE: 11/19/93
DRAWN BY: P.J.K. DATE: 11/23/93
CHECKED BY: N.C.Y. DATE: /94
SCALE: 1"=50'

11949\PROP-LTG 1=50'

LIGHTING PLAN

FHWA REGION	STATE	PROJECT	
5	OHIO		

94/214

CUYAHOGA COUNTY
CUY-6-14.99

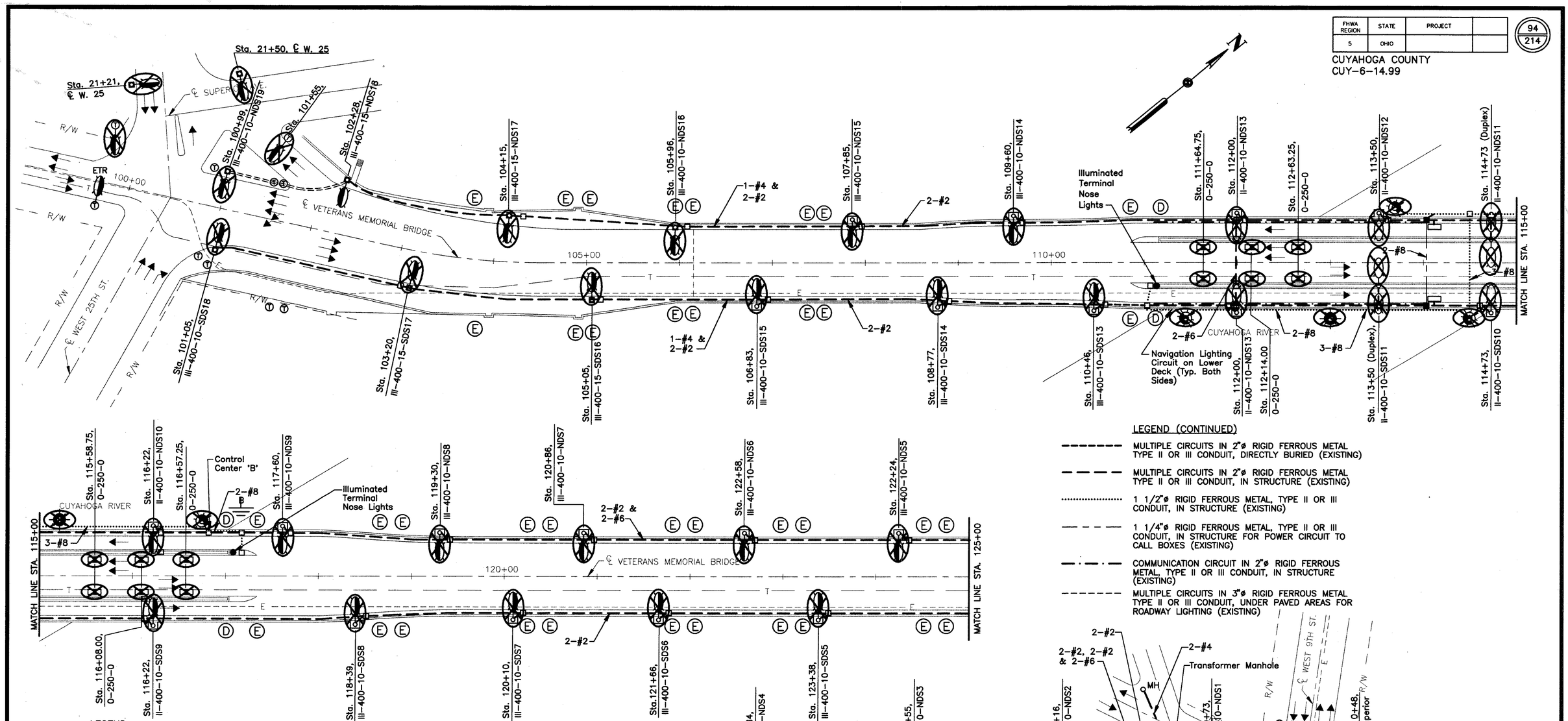

LEGEND (CONTINUED)

- MULTIPLE CIRCUITS IN 2"ø RIGID FERROUS METAL TYPE II OR III CONDUIT, DIRECTLY BURIED (EXISTING)
- MULTIPLE CIRCUITS IN 2"ø RIGID FERROUS METAL TYPE II OR III CONDUIT, IN STRUCTURE (EXISTING)
- 1 1/2"ø RIGID FERROUS METAL, TYPE II OR III CONDUIT, IN STRUCTURE (EXISTING)
- 1 1/4"ø RIGID FERROUS METAL, TYPE II OR III CONDUIT, IN STRUCTURE FOR POWER CIRCUIT TO CALL BOXES (EXISTING)
- COMMUNICATION CIRCUIT IN 2"ø RIGID FERROUS METAL, TYPE II OR III CONDUIT, IN STRUCTURE (EXISTING)
- MULTIPLE CIRCUITS IN 3"ø RIGID FERROUS METAL TYPE II OR III CONDUIT, UNDER PAVED AREAS FOR ROADWAY LIGHTING (EXISTING)

LEGEND

- EXISTING GROUND MOUNTED LIGHTING UNIT: HIGH PRESSURE SODIUM LAMP 400W
- EXISTING COMBINATION SIGNAL/LIGHT POLE WITH LUMINAIRE ON BRACKET ARM
- EXISTING STRUCTURE MOUNTED LIGHTING UNIT: HIGH PRESSURE SODIUM LAMP 400W. TYPE III DISTRIBUTION
- EXISTING STRUCTURE MOUNTED LIGHTING UNIT ON PARAPET: HIGH PRESSURE SODIUM LAMP 400W. TYPE II DISTRIBUTION
- EXISTING STRUCTURE MOUNTED LIGHTING UNIT ON MEDIAN: HIGH PRESSURE SODIUM LAMP 400W. TYPE II DISTRIBUTION
- GROUND MOUNTED LIGHTING UNIT: HIGH PRESSURE SODIUM LAMP 400W. TYPE III MC DISTRIBUTION
- INDICATES LIGHTING UNIT TO BE REMOVED
- WOOD UTILITY POLE WITH BRACKET ARM AND LUMINAIRE. HIGH PRESSURE SODIUM LAMP 400W
- EXISTING ANTIQUE STYLE LIGHTING UNIT. 250W HIGH PRESSURE SODIUM 18' MOUNTING HEIGHT
- TRAFFIC SIGNAL/SIGN STRAIN POLE
- EXISTING MERCURY VAPOR UNDERPASS LIGHTING UNIT MOUNTED ON VERTICAL STEEL POST OF STRUCTURE: CLEAR LAMP 250W
- ILLUMINATED TERMINAL NOSE LIGHT
- NAVIGATION LIGHT, 360°
- NAVIGATION LIGHT, 180°
- EXPANSION JOINT FITTING
- EXPANSION AND DEFLECTION FITTING
- ETR — EXISTING LIGHTING UNIT TO REMAIN

HOWARD NEEDLES TAMMEN & BERGENDOFF
ARCHITECTS ENGINEERS PLANNERS HNTB

MADE BY: F.E.G. DATE: 3/19/93
DRAWN BY: P.J.K. DATE: 3/19/93
CHECKED BY: N.C.Y. DATE: /94
SCALE: 1"=50'

1184A(X-26) 1=50'

EXISTING LIGHTING AND REMOVAL PLAN

FHWA REGION	STATE	PROJECT	
5	OHIO		

95
412

CUYAHOGA COUNTY
CUY-6-14.99

TYPE OF LIGHTING	MAINTAINING AGENCY	ENERGY CHARGES PAID BY
ROADWAY	CLEVELAND PUBLIC POWER	CITY OF CLEVELAND
ORNAMENTAL	CUYAHOGA COUNTY	CITY OF CLEVELAND
NAVIGATION	CUYAHOGA COUNTY	CUYAHOGA COUNTY
NOSE LIGHTS	CUYAHOGA COUNTY	CUYAHOGA COUNTY
DECORATIVE	CUYAHOGA COUNTY	CUYAHOGA COUNTY

TABLE OF LIGHTING MAINTENANCE AND FINANCIAL RESPONSIBILITY

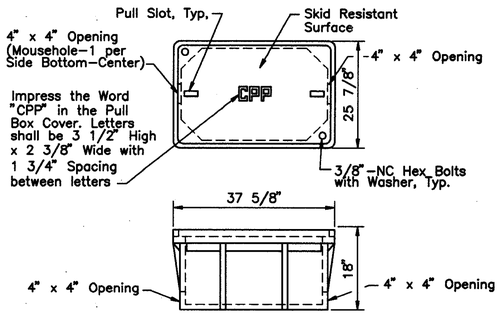

PULL BOX DETAIL
(For Further Details, See Note 12 on Sheet E2)
Not to Scale

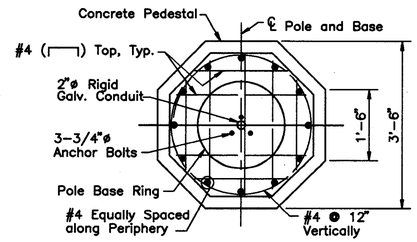

PLAN

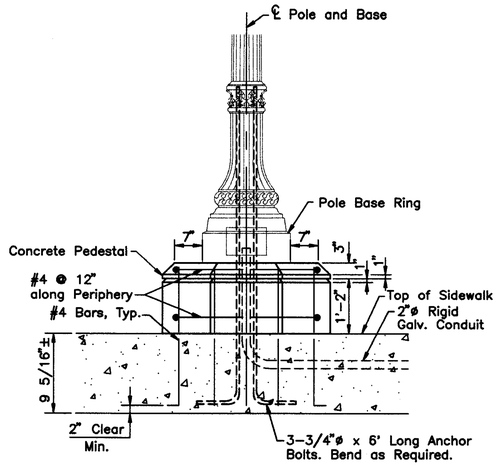

FRONT

PEDESTAL DETAIL
(Sta. 102+10 Rt.)
(Sidewalk Rebar Not Shown)
Not to Scale

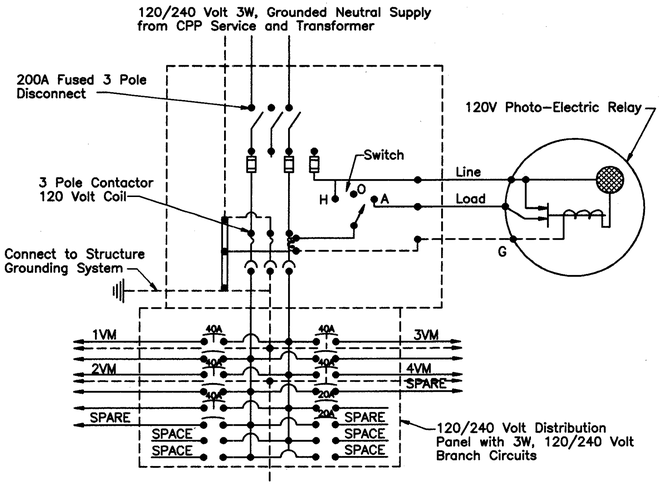

POWER SERVICE
120/240 V, 3 WIRE, GROUNDED NEUTRAL MULTIPLE CIRCUIT
Not to Scale

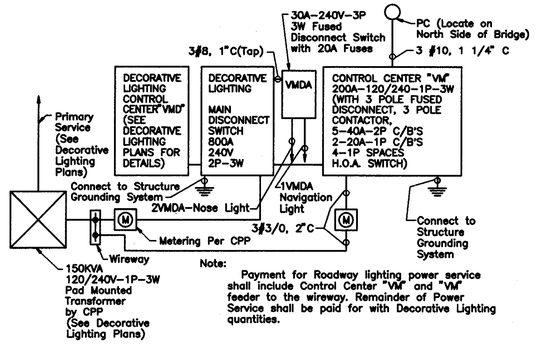

Note:
Payment for Roadway lighting power service shall include Control Center "VM" and "VM" feeder to the wireway. Remainder of Power Service shall be paid for with Decorative Lighting quantities.

POWER SERVICE
Not to Scale

Notes:
Expansion joint fitting is shown for 2"ø Schedule 40 PVC Conduit. Fittings for other sizes of conduit shall be similar, except as noted.

Expansion joint fittings shall be equal to Carlon E945J for 2"ø Conduit. E945H for 1 1/2"ø Conduit.

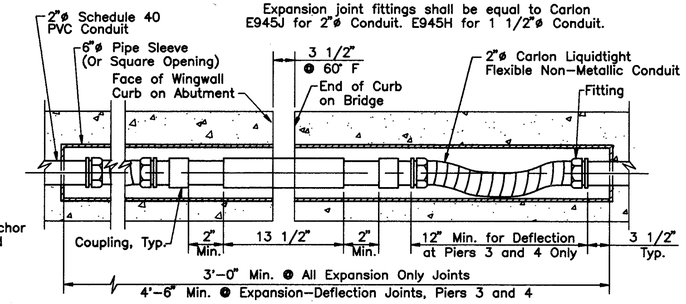

EXPANSION JOINT FITTING
Not to Scale

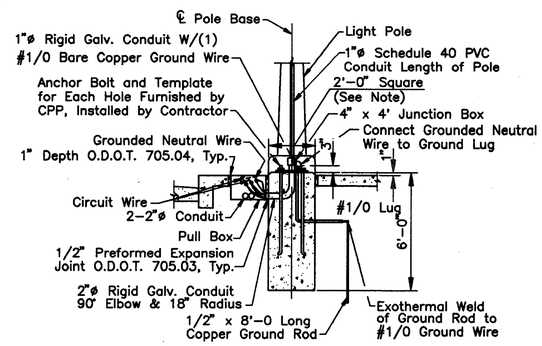

LIGHT POLE BASE SECTION AT PULL BOX
(Poles Located on Bridge)
Not to Scale

Note:
Top 6" is square. Foundation below 6" depth can be round or 24" square.

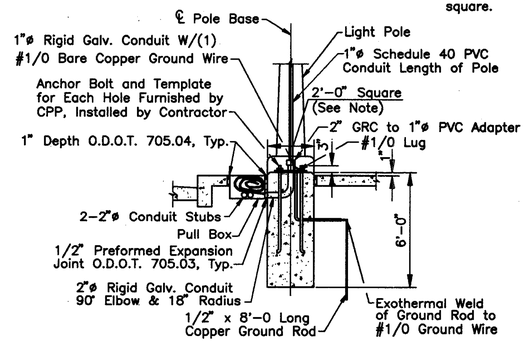

LIGHT POLE BASE SECTION AT PULL BOX
(Light Poles Not Located on Bridge)
Not to Scale

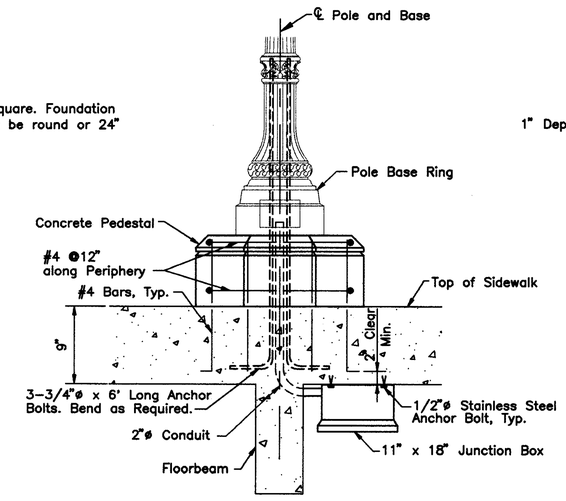

FRONT

PEDESTAL AND PULL BOX DETAIL
(Sta. 130+51 Rt.)
(Sidewalk and Floorbeam Rebar Not Shown)
Not to Scale

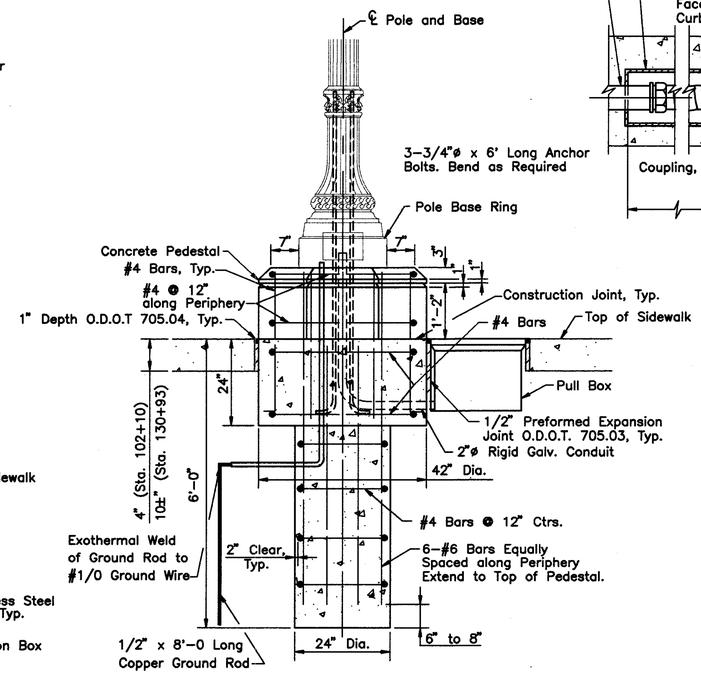

FRONT

PEDESTAL & FOUNDATION DETAIL
(Sta. 102+10 Lt. and Sta. 130+93Lt.)
(Sidewalk Rebar Not Shown)
Not to Scale

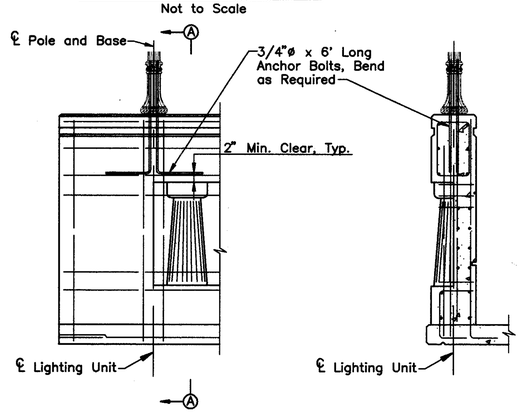

CLEVELAND LAMP STANDARD RAILING MOUNTING DETAIL
(Looking from Outside of Bridge)
Not to Scale

SECTION A-A
Not to Scale

HOWARD NEEDLES TAMMEN & BERGENDOFF
ARCHITECTS ENGINEERS PLANNERS HNTB

MADE BY: F.E.G. DATE: 4/28/94
DRAWN BY: P.J.K. DATE: 4/27/94
CHECKED BY: N.C.Y. DATE: -/--/-
SCALE: As Shown

11646/LTDET 1=1

LIGHTING DETAILS

FHWA REGION	STATE	PROJECT	
5	OHIO		

96
412

CUYAHOGA COUNTY
CUY-6-14.99

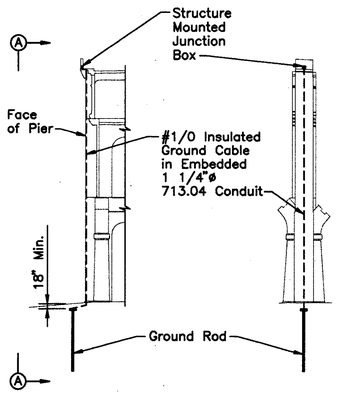

SECTION A-A

STRUCTURE GROUNDING DETAIL
Not to Scale

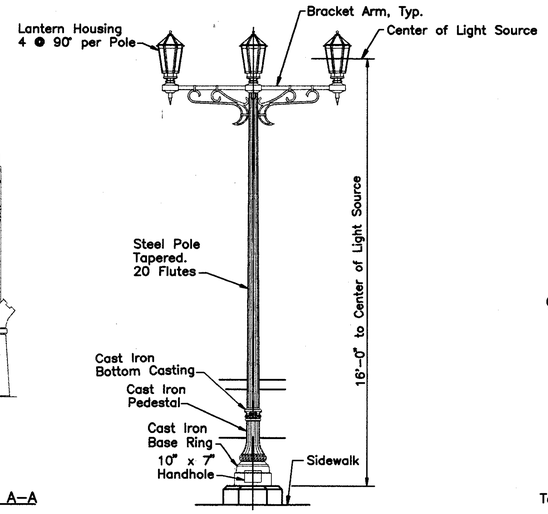

QUADRUPLE CLEVELAND LAMP STANDARD
(4 Required At Approaches)
Not to Scale

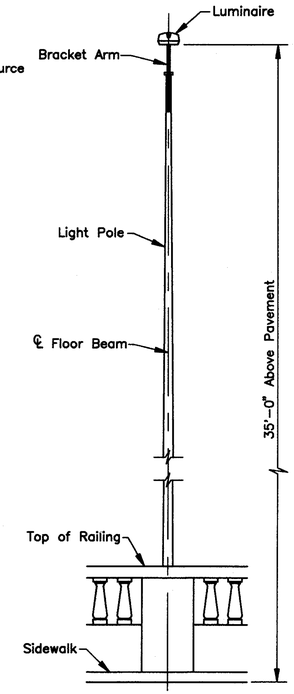

FRONT VIEW

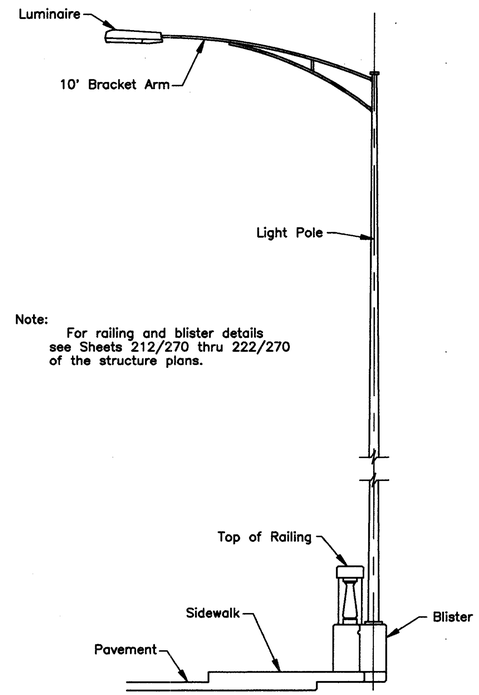

Note:
For railing and blister details see Sheets 212/270 thru 222/270 of the structure plans.

SIDE VIEW

STRUCTURE MOUNTED LIGHTING UNIT
(Typical) (Fence Not Shown)
Not to Scale

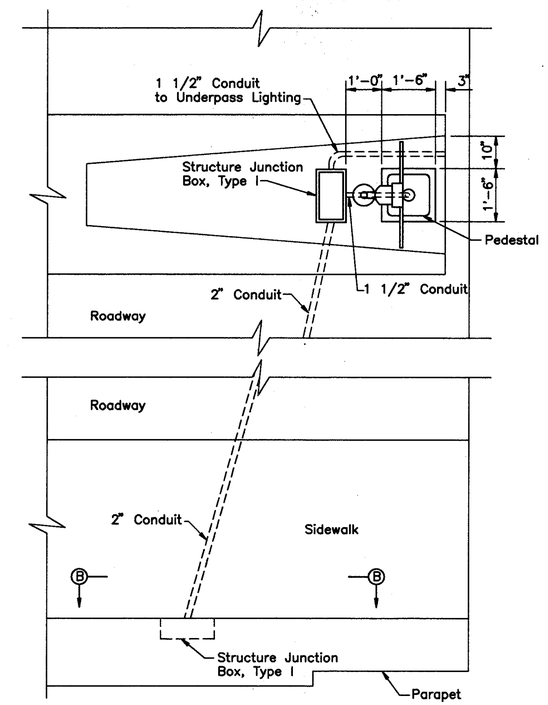

PLAN

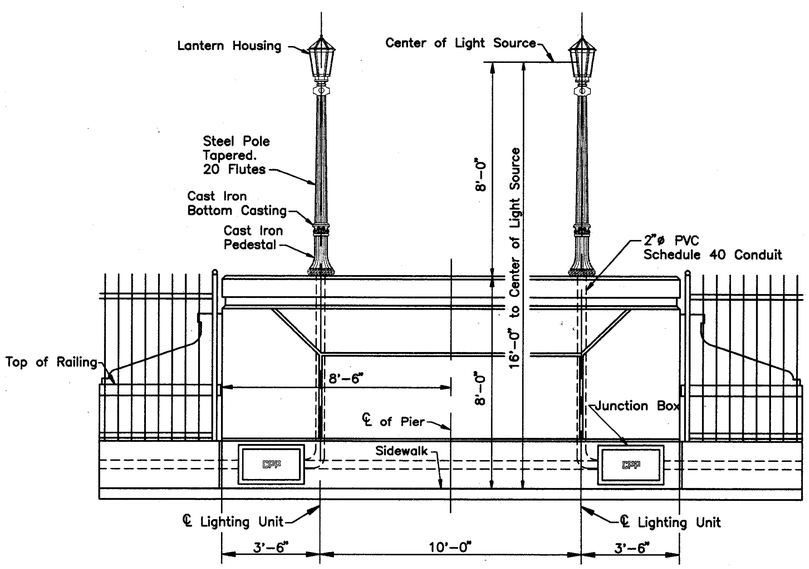

CLEVELAND LAMP STANDARD
(4 Required At Piers 3 and 4)
Not to Scale

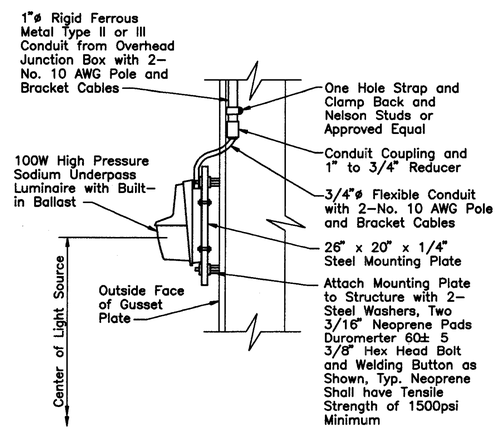

Notes:
Luminaire to be mounted 18'-0"± 12" above top of roadway. Fixture mounting to be approved by the Engineer. Fixture shall be mounted behind gusset plate for oncoming traffic.
Each luminaire shall have separate integral fuses.

UNDERPASS LIGHTING MOUNTING DETAIL
Not to Scale

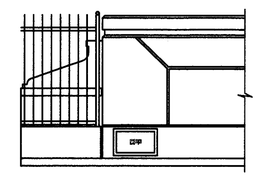

SECTION B-B
Not to Scale

Notes:
1. See Sheet 57 for pedestal, sign and sign flasher assembly.
2. Payment for power service connection from junction box to sign is part of traffic quantities Item 630.

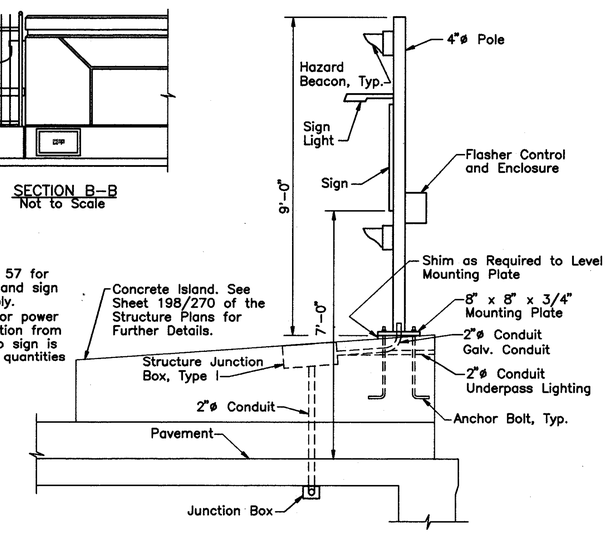

SIDE

NOSE LIGHT DETAIL
Scale: 1/2"=1'-0"

HOWARD NEEDLES TAMMEN & BERGENDOFF
ARCHITECTS ENGINEERS PLANNERS
HNTB

MADE BY: F.E.G. DATE: 4/26/94
DRAWN BY: P.J.K. DATE: 4/27/94
CHECKED BY: N.C.Y. DATE: -/--/--
SCALE: As Shown

11646/LTDET 1=1

LIGHTING DETAILS

FHWA REGION	STATE	PROJECT	
5	OHIO		

96A
412

CUYAHOGA COUNTY
CUY-6-14.99

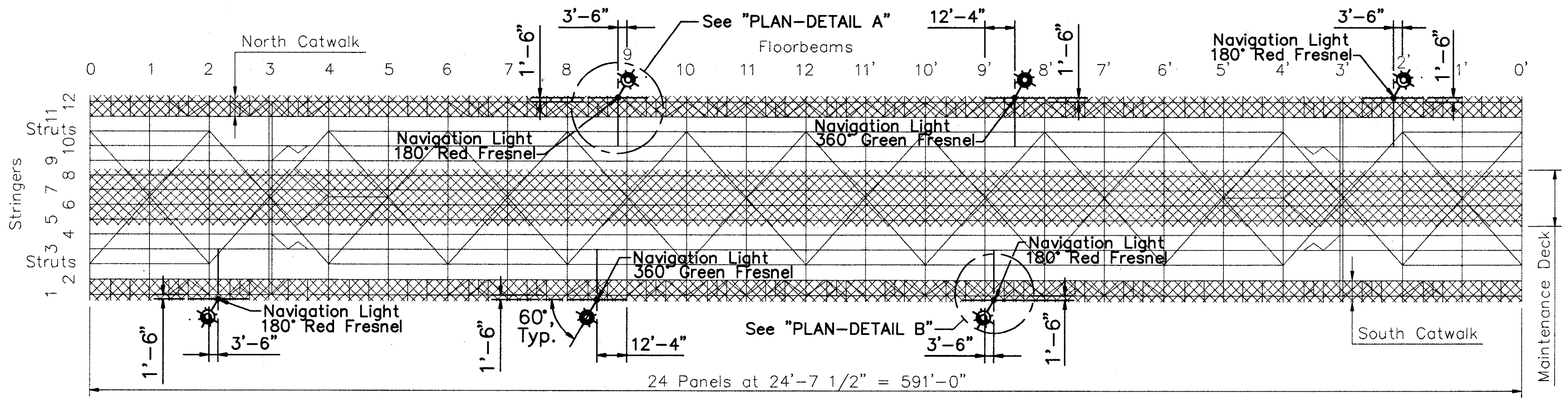

LOCATION PLAN
Scale: 1"=30'-0"

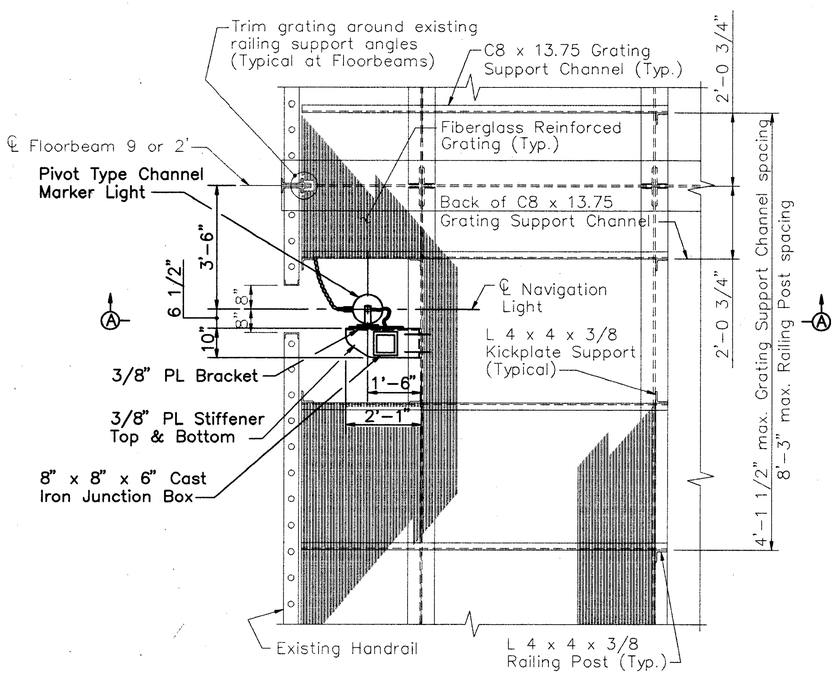

PLAN-DETAIL A
Scale: 1/2"=1'-0"
(Typical North Bay only)
(Detail between floorbeams 8' and 9' similar)
(Railing Angles not shown)

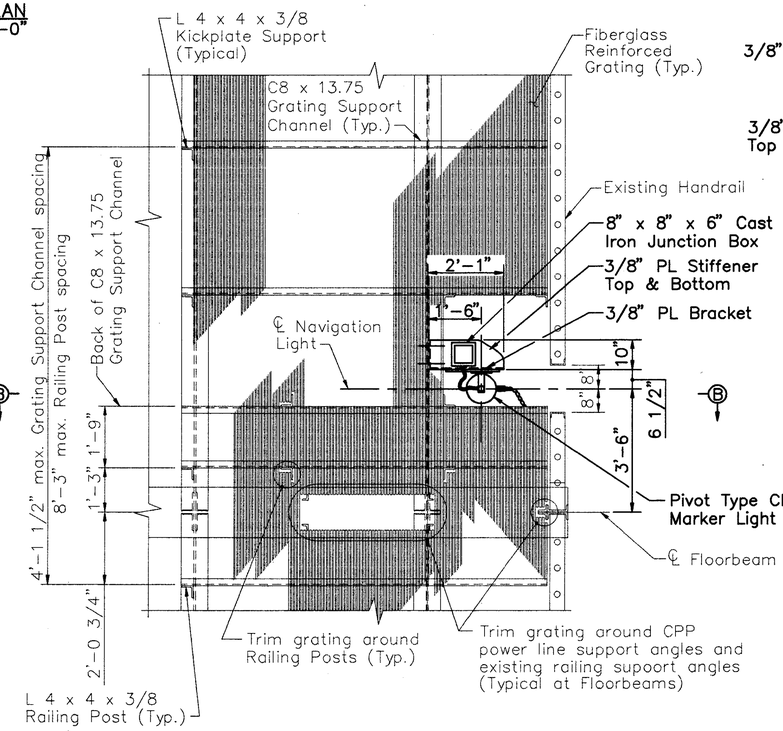

PLAN-DETAIL B
Scale: 1/2"=1'-0"
(Typical South Bay only)
(Detail between floorbeams 8 and 9 similar)
(Railing Angles not shown)

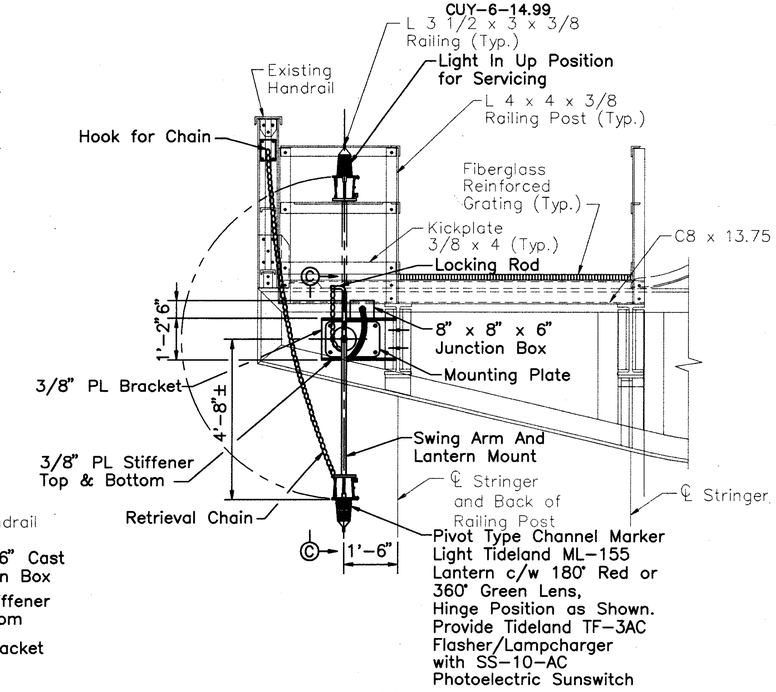

SECTION A-A
Scale: 1/2"=1"-0"

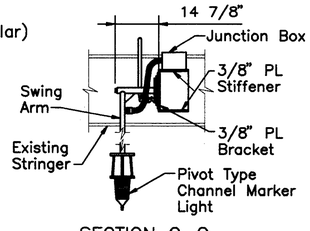

SECTION C-C
Scale: 1/2"=1'-0"

Note:
All navigation light mounting hardware: nuts, bolts, cotter pins, etc. shall be stainless steel.

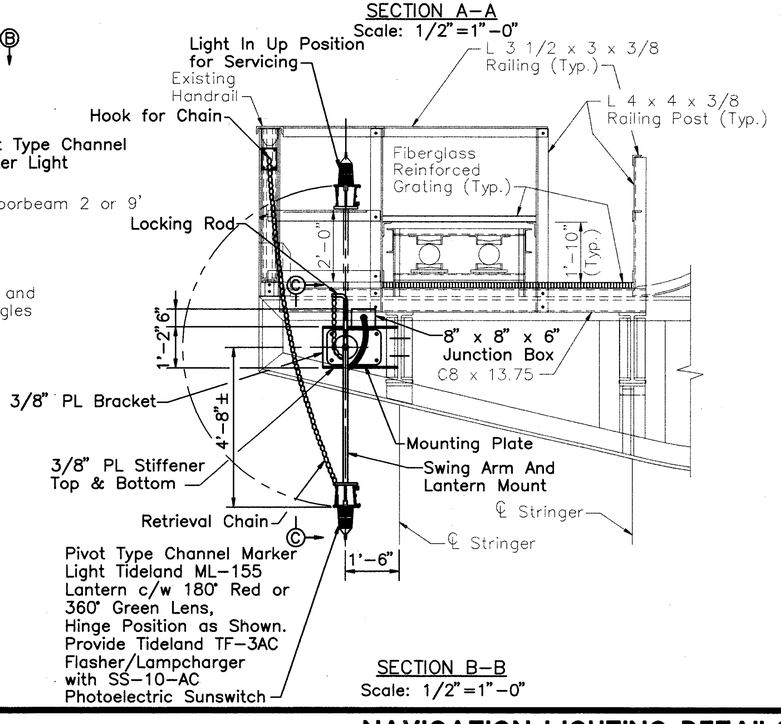

SECTION B-B
Scale: 1/2"=1"-0"

HOWARD NEEDLES TAMMEN & BERGENDOFF
ARCHITECTS ENGINEERS PLANNERS
HNTB

MADE BY: F.E.G. DATE: 4/12/94
DRAWN BY: P.J.K. DATE: 4/13/94
CHECKED BY: N.C.Y. DATE:
SCALE: 1/2"=1'-0"

11646/NAVLTE 1=1

NAVIGATION LIGHTING DETAILS

DECORATIVE LIGHTING NOTES

SPECIFICATIONS

THESE NOTES ARE SUPPLEMENTAL TO ITEMS 625 AND 713 OF THE STATE OF OHIO DEPARTMENT OF TRANSPORTATION CONSTRUCTION AND MATERIAL SPECIFICATIONS AND TO THE LIGHTING GENERAL NOTES- SHEET 89.

REFERENCE SHALL BE MADE TO STANDARD CONSTRUCTION DRAWINGS LISTED ON THE TITLE SHEET OF THESE PLANS.

GENERAL

THIS PROJECT WILL RECEIVE 240/120 VOLT, THREE WIRE, SECONDARY SERVICE, WITH GROUNDED NEUTRAL FROM:

CLEVELAND PUBLIC POWER (C.P.P.)
LAKESIDE AVENUE
CLEVELAND, OHIO 44114

THE CONTRACTOR WILL NOT BE REQUIRED TO FURNISH OR INSTALL THE PRIMARY DISTRIBUTION LINES, TRANSFORMERS OR TRANSFORMER POLES. THE CONTRACTOR SHALL PROVIDE SECONDARY CONNECTIONS, FEEDERS, CONNECTION TO BRANCH CIRCUITS AND GROUNDS AS HEREINAFTER SPECIFIED AND SHOWN ON THE PLANS AND ASSURE THAT ALL POWER SERVICE REQUIREMENTS WITH THE SUPPLYING AGENCY ARE PROVIDED.

LUMINAIRES-HIGH PRESSURE SODIUM

THE LUMINAIRES SHALL BE CONSTRUCTED OF COPPER FREE ALUMINUM. THE HOUSING SHALL BE THOROUGHLY CLEANED AND BE COATED WITH ELECTROSTATICALLY DEPOSITED AND THERMALLY SET POWDERED POLYESTER PAINT. THE PAINT COLOR SHALL MATCH THE ADJOINING PORTION OF THE BRIDGE. ALL EXPOSED METAL PARTS, INCLUDING THE YOKE, SHALL BE STAINLESS STEEL. THE DOOR SHALL BE HINGED TO PROVIDE EASY ACCESS DURING RELAMPING AND SHALL BE SECURED TO THE FIXTURE WHILE OPEN. DOOR FASTENING DEVICES SHALL BE CAPTIVE . THE DESIGN SHALL BE SUCH THAT TOP AND SIDE SHIELD CAN BE ADDED IF NECESSARY. GLARE SHIELDS SHALL BE PROVIDED AS INDICATED ON THE PLANS. GLARE SHIELDS/LOUVERS SHALL BE CONSTRUCTED OF 1100 ALUMINUM, 0.63-INCHES THICK. THE FINISH WILL BE TRIGLYCIDYL ISOCYANURATE THERMOSET POLYESTER APPLIED BY AN ELECTROSTATIC POWDER PAINT PROCESS OVER A PRISMATECT (TM) COATING. THE COLOR OF THE GLARE SHIELD/LOUVER IS TO MATCH THE COLOR OF THE EXTERIOR OF THE FLOODLIGHT.

ALL ELECTRICAL COMPONENTS SHALL BE REMOVABLE AND REPLACEABLE AS A SINGLE UNIT WITHOUT DISTURBING THE AIMING. THE BALLAST SHALL HAVE COPPER WINDINGS AND A POWER FACTOR OF OVER 90%. THE HPS IGNITER SHALL BE OF A DESIGN THAT WILL SHUT OFF THE FIXTURE IF IT SENSES A FAILED LAMP. FIXTURE SHALL BE INTEGRALLY FUSED WITH A DOUBLE FUSE ASSEMBLY.

LIGHT DISTIBUTION SHALL BE AS INDICATED ON THE PLANS.

LUMINAIRES SHALL BE EQUIVALENT TO THE HOLOPHANE PREDATOR CATALOG NUMBERS AS FOLLOWS:

① 50W HPS-PD05HP24LW3-SC-PS-TSIN-F2

② 250W HPS-PF250HP24LW3-SC-PS-TSIN-F2
-PF250HP24LN3-SC-PS-TSIN-F2
-PF250HP24LS3-SC-PS-TSIN-F2

④ 100W HPS-PD100HP24LW3-SC-PS-TSIN-F2

THE ELECTRICAL COMPONENTS OF THE FIXTURE SHALL BE WARRANTED FOR AT LEAST FIVE (5) YEARS. THE MECHANICAL COMPONENTS SHALL BE WARRANTED FOR AT LEAST TWO (2) YEARS.

ALL UNITS SHALL BE UL595 LISTED FOR MARINE OUTSIDE. OTHER MARINE LISTINGS SHALL NOT BE ACCEPTABLE.

THE MANUFACTURER SHALL PROVIDE FIELD SERVICE PERSONNEL TO ASSURE THAT ALL LUMINAIRES ARE PROPERLY AIMED AND TO ADJUST AIMING OF ANY FIXTURES AS REQUIRED BY FIELD CONDITIONS, AND TO ASSURE THAT THE ROADWAY IS FREE OF GLARE.

FIXTURE MOUNTING BRACKETS

MOUNTING BRACKETS SHALL BE AS DETAILED IN THE PLANS. PAYMENT FOR THEM SHALL BE INCLUDED IN THE BID PRICE FOR "ITEM 625, LUMINAIRE, FLOODLIGHT"

ATTACHMENT OF BRACKET TO CONCRETE

BRACKETS SHALL BE ALIGNED AS PER PLAN. ANCHOR BOLT HOLES FOR 1/2-IN. ø BOLTS SHALL BE DRILLED WITH A ROTARY DRILL USING CARBIDE TIPPED DRILL BITS. VIBRATORY OR HAMMER TYPE TOOLS WILL NOT BE PERMITTED FOR FORMING ANCHOR BOLT HOLES. HILTI STAINLESS STEEL KWIK BOLT II ANCHOR BOLTS, NO. HKB1/2" AS MANUFACTURED BY HILTI CORPORATION, TULSA, OKLAHOMA OR APPROVED EQUAL SHALL BE USED. THE BOLT SHALL BE IMBEDDED A MINIMUM OF 2 1/4 INCHES INTO THE CONCRETE. 1/2 INCH DIA. EXPANSION TYPE ANCHOR BOLTS WITH A MINIMUM PULL OUT CAPACITY OF 3,000 POUNDS SHALL BE USED.

ATTACHMENT OF JUNCTION BOXES TO CONCRETE

JUNCTION BOXES SHALL BE MOUNTED IN SAME MANNER AS BRACKETS EXCEPT USE APPROPRIATE SIZE BOLTS AND ANCHORS FOR BOX MOUNTING HOLES. ANCHOR BOLTS SHALL HAVE A MINIMUM PULL OUT CAPACITY OF 2,000 POUNDS.

CONNECTOR KITS

CABLE CONNECTIONS IN JUNCTION BOXES SHALL BE ACCOMPLISHED BY THE USE OF APPROVED FACTORY PREASSEMBLED CABLE CONNECTOR KITS.

UNTIL CABLE CONNECTIONS HAVE BEEN COMPLETED, ALL CABLE CONNECTOR KITS AND EXPOSED CABLE ENDS SHALL BE ADEQUATELY PROTECTED BY ENCLOSING IN PLASTIC BAGS, TAPING OR OTHER APPROVED MEANS.

CONDUIT ON STRUCTURE

EXPANSION FITTINGS FOR DECORATIVE LIGHTING CIRCUIT CONDUIT ON STRUCTURES SHALL BE OZ TYPE AX, CROUSE-HINDS TYPE XJ-4, APPLETON TYPE XJ-4 OR EQUAL APPROVED BY THE ENGINEER, FOR EXPANSIONS NOT EXCEEDING 4 INCHES, AND OZ TYPE AX-8, OR EQUAL APPROVED BY THE ENGINEER, FOR EXPANSIONS EXCEEDING 4 INCHES. SEE ROADWAY LIGHTING PLAN, SHEET E6 FOR UPPER DECK EXPANSION JOINT LOCATIONS. SEE DECORATIVE LIGHTING PLAN-LOWER DECK, SHEET 100 FOR LOWER DECK EXPANSION JOINT LOCATIONS.

CONTROL CENTER

THE CONTRACTOR SHALL FURNISH A CONTROL CENTER TO SERVE ALL DECORATIVE LIGHTING CIRCUITS. THE CONTROL CENTER SHALL INCLUDE THE CONTROL EQUIPMENT, MOUNTED AS SHOWN ON LIGHTING DETAIL SHEETS, AND BE AS FOLLOWS:

1. THE CONTROL CENTER SHALL BE A COMPLETE PACKAGE CONTAINING ALL THAT IS NECESSARY TO FUNCTION AS AN INDEPENDENT CONTROL UNIT, INCLUDING ALL INTERNAL WIRING CONNECTIONS.

2. THE CONTROL CENTER SHALL BE RATED FOR 800 AMPERES AT 240V.AC.

3. CIRCUIT PROTECTION SHALL BE AS SHOWN ON THE SINGLE LINE DIAGRAM AND PANEL SCHEDULE.

4. THE CONTROL ENCLOSURE SHALL BE A MINIMUM NEMA CLASS 4X CORROSION RESISTANT, AND HAVE PROVISIONS FOR A PADLOCK AND INCLUDE BRACKETS FOR WALL MOUNTING INCLUDING ALL NECESSARY MOUNTING HARDWARE.

THE CONTRACTOR SHALL PROVIDE ELECTRICAL SERVICE FROM THE POWER CO. PAD MOUNTED TRANSFORMER TO THE LIGHTING CIRCUITS, INSTALLED IN THE MANNER SHOWN IN THE PLANS. THIS ITEM OF WORK SHALL INCLUDE FURNISHING, AND INSTALLING CONDUITS, LIGHTNING ARRESTOR, AND GROUNDING AT THE BRIDGE, ALL WIRING OF THE SIZE INDICATED ON THE PLANS AND ALL OTHER MATERIALS AND INCIDENTALS AS MAY BE REQUIRED TO COMPLETE THE ITEM OF WORK.

BASIS OF PAYMENT SHALL BE AT THE LUMP SUM BID PRICE FOR ITEM 625-"CONTROL CENTER", COMPLETE IN PLACE WITH ALL MATERIALS, LABOR AND INCIDENTALS, TESTED AND ACCEPTED.

PADLOCK AND KEYS

EACH ENCLOSURE SHALL BE FURNISHED WITH A PADLOCK. PADLOCKS SHALL BE EITHER BRASS OR BRONZE EQUAL TO MASTER NO. 4 BKA OR WILSON BOHANNON 660A AND SHALL BE KEYED IN ACCORDANCE WITH SUPPLEMENTAL SPECIFICATION SECTION 844.10(4). PARAGRAPH 3, PAYMENT WILL BE INCLUDED IN THE BID FOR THE ITEMS TO BE LOCKED.

HIGH VOLTAGE TEST

A HIGH VOLTAGE DIRECT CURRENT TEST, AS DESCRIBED IN SUPPLEMENTAL SPECIFICATION SECTION 839, SHALL BE PERFORMED ON ALL DISTRIBUTION CABLE TO BE INSTALLED ON THIS PROJECT. THE TEST SHALL NOT BE PERFORMED UNTIL AFTER ALL NEW CONSTRUCTION IN THE IMMEDIATE VICINITY OF THE LOCATION OF THE CABLE RUN BEING TESTED, HAS BEEN COMPLETED.

THE TESTING REQUIREMENTS OF 625.22(B) ARE HEREBY WAIVED FOR THOSE CIRCUITS ON WHICH THE HIGH VOLTAGE TEST IS TO BE PERFORMED.

FHWA REGION	STATE	PROJECT	
5	OHIO		

97A
412

CUYAHOGA COUNTY
CUY – 6 – 14.99

CLEVELAND PUBLIC POWER (C.P.P.) DUCT BANK

CPP DUCT BANK

A. DESCRIPTION

THIS ITEM SHALL CONSIST OF FURNISHING AND INSTALLING A CPP DUCT BANK WITH SPECIALS IN ACCORDANCE WITH THESE SPECIFICATIONS ; ITEM 513 AND OTHER ITEMS OF THE STANDARD CONSTRUCTION AND MATERIAL SPECIFICATIONS AS APPLICABLE; AND WITHIN REASONABLE CLOSE CONFORMITY TO THE LINES, GRADES, LOCATIONS, DETAILS AND NOTES SHOWN IN THE PLANS.

B. MATERIAL

1. STRUCTURAL STEEL – ASTM A36

2. HIGH STRENGTH BOLTS – ASTM A325

3. FIBERGLASS REINFORCED EPOXY DUCTS AND FITTINGS

a) GENERAL– THE REQUIREMENTS TABULATED BELOW SHALL BE ADHERED TO WHEN SELECITNG RIGID NON–METALLIC FIBERGLASS REINFORCED EPOXY CONDUIT. THE CONTRACTOR SHALL SUBMIT CIRTIFICATIONS OF COMPLIANCE OF THE CONDUIT TO BE INSTALLED. NO ALTERNATIVES TO THIS SPECIFICATION WILL BE ALLOWED.

b) COMPOSITION – CONDUIT SHALL BE COMPOSED OF GLASS FILAMENTS ENCAPSULATED IN AN EPOXY MATRIX. EACH CONDUIT LENGTH SHALL HAVE AN INTEGRAL WOUND IN EXPANDED COUPLING. THE COUPLING SHALL INCORPORATE AN INTEGRAL URETHANE GASKET FOR SEALING. NO THREADS OR ADHESIVES SHALL BE REQUIRED TO ASSEMBLE THE JOINTS. ALL CONDUIT AND FITTINGS WILL BE PIGMENTED WITH CARBON BLACK DISPERSED HOMOGENEOUSLY THROUGHOUT THE EPOXY GLASS MATRIX FOR U.V. PROTECTION.

c) MANUFACTURING – CONDUIT AND FITTINGS SHALL BE FILAMENT WOUND.

d) TEMPERATURE – CONDUIT SHALL BE SUITABLE FOR CONTINUOUS OPERATION FROM –40°C TO +110°C WITHOUT SIGNIFICANT CHANGE OF MECHANICAL PROPERTIES.

e) COMBUSTION PROPERTIES – CONDUIT COMBUSTION BY–PRODUCTS SHALL NOT CONTAIN CHLORINE GAS IN EXCESS OF TRACE LEVELS AND ALWAYS LESS THAN SAFE OSHA LIMITS.

f) CABLE FAULTS – CONDUCTORS SHALL NOT ADHERE TO CONDUIT OR FITTINGS IN FAULT CONDITIONS.

g) DIMENSIONS – CONDUIT AND FITTINGS SHALL BE IN THE 5" SIZE AND SHALL HAVE INSIDE DIAMETERS EQUAL TO THE TRADE SIZE.

h) PHYSICAL PROPERTIES – THE CONDUIT SHALL HAVE THE FOLLOWING PHYSICAL PROPERTIES:

SPECIFIC GRAVITY	–	1.94	ASTM–D 792
BARCOL HARDNESS	–	52	ASTM–D 2583
GLASS CONTENT	–	68%	API SPEC.5LR
DIELECTRIC STRENGTH	–	500 VOLTS/MIL	ASTM–D149
DISSIPATION FACTOR	–	0.5% (AVG–AT ROOM TEMP, 110V.,60 HZ.)	ASTM–D150
COEFFICIENT OF THERMAL EXPANSION	–	1.25 X 10–5 IN./IN.°F	ASTM–D696
THERMAL CONDUCTIVITY	–	2 BTU/HR.FT.2.(°F/IN.)	
TENSILE STRENGTH (AXIAL)	–	11,000 PSI	CGE–101
CONTINUOUS SERVICE TEMP	–	230° F	C.S.A. BULLETIN 1089
FLAMMABILITY	–	HB RATING	U.L. 94

4. FIBERGLASS REINFORCED PLASTIC PANELS – THE PANELS SHALL MEET THE FOLLOWING REQUIREMENTS.

a) GLASS REINFORCEMENT SHALL BE COMPOSED OF MULTIPLE LAYERS OF BIDIRECTIONAL CONTINUOUS STRAND WOVEN AND CHOPPED STRAND GLASS AND SHALL BE APPROXIMATELY 45% BY WEIGHT. BOTH SURFACES SHALL HAVE A CORROSION/WEATHERING BARRIER.

b) RESIN SHALL BE HIGH QUALITY ISOPHTHALIC, NEOPENTYL GLYCOL, HALOGENATED POLYESTER WITH ACRYLIC MODIFICATION AND UV STABILIZERS.

c) THE PANEL SHALL HAVE A STRENGTH ABLE TO RESIST 50 POUNDS PER SQUARE FOOT AT A SPAN LENGTH OF 5 FT 10 IN AND HAVE THE FOLLOWING PHYSICAL PROPERTIES:

HARDNESS, BARCOL ASTM D 2583	–	40
FLEXURAL STRENGTH, PSI ASTM D 790	–	42,000
FLEXURAL MODULUS, PSI ASTM D 790	–	1,300,000
TENSILE STRENGTH, PSI ASTM D 638	–	32,000
COEFFICIENT OF EXPANSION (IN/IN/°F)ASTM D 696	–	0.0000111
CONDUCTIVITY (K FACTOR) ASTM C 177	–	1.15
DIELECTRIC STRENGTH RMS V. @ 60 CYCLES ASTM D 149	–	483 V/MIL.
FIRE RESISTANCE IGNITION POINT ASTM D 1929	–	820°F. – 900°F.
FLAME SPREAD CLASSIFICATION ASTM E 84 (UL 723)	–	25

FLAMMABILITY ASTM D 635
AVERAGE TIME OF BURNING LESS THAN 5 SECONDS
AVERAGE EXTENT OF BURNING LESS THAN 15 MM.
BUILDING CODE CLASSIFICATION CC1 OR C1.

5. FIBERGLASS GRATING – THE FIBERGLASS GRATING SHALL MEET THE MATERIAL REQUIREMENTS SPECIFIED IN THE GENERAL STRUCTURE NOTE NUMBER 59 ON DRAWING NO. 149/412, EXCEPT THE GRATING SHALL BE ABLE TO RESIST 90 psf OR A CONCENTRATED LOAD OF 250 LBS. ON A 12 IN. STRIP.

C. EXISTING STRUCTURE VERIFICATION–THE CPP DUCT BANK CONSTRUCTION IS SUBJECT TO THE EXISTING STRUCTURE VERIFICATION REQUIREMENTS SPECIFIED IN THE GENERAL STRUCTURE NOTE NUMBER 11 ON DRAWING NO. 133/412.

D. REQUIREMENTS FOR CONDUITS AND FITTINGS– CONDUITS AND FITTINGS SHALL BE SUITABLE FOR USE IN BRIDGE APPLICATION WETHER SUSPENDED OR ENCASED AND SHALL BEAR NATIONALLY ACCEPTED TESTING LABORATORY APPROVAL FRON U.L. AND CSA.

E. PAINTING– ALL NEW STRUCTURAL STEEL SHALL BE PAINTED AS SPECIFIED IN THE GENERAL STRUCTURE NOTE NUMBER 43 ON DRAWING NO. 144/412.

F. SHOP DRAWINGS– SHOP DRAWINGS ARE REQUIRED FOR ALL COMPONENTS OF THE CPP DUCT BANK.

G. PAYMENT – THIS WORK WILL BE PAID FOR AT THE CONTRACT PRICES BID AS TABULATED BELOW, WHICH PRICES AND PAYMENTS SHALL BE FULL COMPENSATION FOR ALL LABOR, EQUIPMENT, MATERIALS AND INCIDENTALS NECESSARY TO COMPLETE THE WORK IN CONFORMANCE WITH THESE REQUIREMENTS, PLAN DETAILS AND TO THE SATISFACTION FO THE ENGINEER.

ITEM	UNIT	DESCRIPTION
SPECIAL	L.F.	DUCT 5" FIBERGLASS REINFORCED EPOXY
SPECIAL	EACH	DUCT SUPPORT
SPECIAL	EACH	CPP SPLICING CHAMBER

ALL WORK TO COMPLETE THE CPP DUCT BANK INSTALLATION SHALL BE INCLUDED IN THE THREE PAY ITEMS LISTED. NO SEPARATE PAYMENT WILL BE MADE FOR SUCH INCIDENTALS AS TERMINATING THE DUCT BANK AT THE DETROIT AVENUE CLOSURE WALL, PAINTING OF THE STRUCTURAL STEEL OR EXISTING STRUCTURE VERIFICATION.

COUNTY BRIDGE NO. 84

HOWARD NEEDLES TAMMEN & BERGENDOFF
ARCHITECTS ENGINEERS PLANNERS
HNTB

C.P.P. UTILITY PLANS
NOTES
BR. NO. CUY – 6 – 1499
REHABILITATION OF
VETERANS MEMORIAL BRIDGE
(U.S. 6, 20, 42 & S.R. 3 OVER CUYAHOGA RIVER)
CLEVELAND CUYAHOGA COUNTY OHIO

DRAWN	TRACED	CHECKED	REVIEWED	REVISED
R.A.S.	R.A.S.	J.O.L.	C.A.B.	
DATE 8/25/94	DATE 8/25/94	DATE 8/27/94	DATE 8/27/94	SHEET

\11646\CONCRETE\CPPGEN.DWG

DECORATIVE LIGHTING NOTES

CUYAHOGA COUNTY
CUY-6-14.99

SPECIFICATIONS
THESE NOTES ARE SUPPLEMENTAL TO ITEMS 625 AND 713 OF THE STATE OF OHIO DEPARTMENT OF TRANSPORTATION CONSTRUCTION AND MATERIAL SPECIFICATIONS AND TO THE LIGHTING GENERAL NOTES- SHEET 89, AND TO ATTACHED DIVISION 16 SPECIFICATIONS IN CASE OF ANY CONFLICTS THE MORE STRINGENT REQUIREMENT WILL APPLY.

REFERENCE SHALL BE MADE TO STANDARD CONSTRUCTION DRAWINGS LISTED ON THE TITLE SHEET OF THESE PLANS.

GENERAL
THIS PROJECT WILL RECEIVE 240/120 VOLT, THREE WIRE, SECONDARY SERVICE, WITH GROUNDED NEUTRAL FROM.

CLEVELAND PUBLIC POWER (C.P.P.)
LAKESIDE AVENUE
CLEVELAND, OHIO 44114

THE CONTRACTOR WILL NOT BE REQUIRED TO FURNISH OR INSTALL THE PRIMARY DISTRIBUTION LINES, TRANSFORMERS OR TRANSFORMER POLES. THE CONTRACTOR SHALL PROVIDE SECONDARY CONNECTIONS, FEEDERS, CONNECTION TO BRANCH CIRCUITS AND GROUNDS AS HEREINAFTER SPECIFIED AND SHOWN ON THE PLANS AND ASSURE THAT ALL POWER SERVICE REQUIREMENTS WITH THE SUPPLYING AGENCY ARE PROVIDED.

LUMINAIRES

LUMINAIRES SHALL BE AS SPECIFIED ON THE ATTACHED LIGHTING FIXTURE SCHEDULE AND EQUIVALENT TO THE MANUFACTURERS CATALOG NUMBERS AS FOLLOWS:

1 (H-100)
MANUFACTURER: KIM CAT # AFL 1/70MH 240 M-CUSTOM COLOR-MOD LINEAR SPREAD LENS
LAMP: GE MXR70/U/MED.
ACCESSORIES: SURFACE MOUNT CAT. # J-27N/ CUSTOM COLOR, FIXED HOOD CAT # FH-CUSTOM COLOR, AND POLYCARBONATE LENS SHIELD CAT # AFL-LS.
REMARKS: CUSTOM COLOR TO MATCH WHITE - FEDERAL SPEC. NO. 37722.

2 (H-101)
MANUFACTURER: HOLOPHANE CAT # PD-175MH 24-L-W-3-B-CUSTOM COLOR LENS ATTACHMENT.
LAMP: GE MVR 175/U
ACCESSORIES: CUSTOM BLUE COLORED LENS IN EXTENSION
REMARKS: LENS COLOR TO BE SPECIFIED BY LIGHTING CONSULTANT

3 (H-102)
MANUFACTURER: HOLOPHANE CAT # PD-175MH 24-L-W-3-CUSTOM COLOR.
LAMP: GE MVR 175/U
ACCESSORIES: CUSTOM GLARE SHIELD WITH CUSTOM COLOR POWDERCOAT FINISH.
REMARKS: CUSTOM COLOR TO MATCH WHITE - FEDERAL SPEC NO. 37722.

4 (H-103)
MANUFACTURER: HOLOPHANE CAT # PD-175MH-24-L-S-3-CUSTOM COLOR.
LAMP: GE MVR175/U
ACCESSORIES: CUSTOM GLARE SHIELD WITH CUSTOM COLOR POWDERCOAT FINISH.
REMARKS: CUSTOM COLOR TO MATCH WHITE - FEDERAL SPEC. NO. 37722.

5 (H-104)
MANUFACTURER: BEGA CAT # 8339MH 240 VOLT
LAMP: GE MVR175/U/MED
ACCESSORIES: LINEAR SPREAD LENS
REMARKS:

5A (H-104A)
MANUFACTURER: BEGA CAT # 8331MH 240 VOLT
LAMP: GE MXR100/U/MED.
ACCESSORIES: LINEAR SPREAD LENS
REMARKS:

5B (H-104B)
MANUFACTURER: BEGA CAT # 8331MH 240 VOLT
LAMP: GE MXR100/C/U/MED.
ACCESSORIES: LINEAR SPREAD LENS
REMARKS:

6 (H-105)
MANUFACTURER: BEGA CAT # 8337MH 240 VOLT.
LAMP: GE MVR175/U/MED.
ACCESSORIES:
REMARKS:

7 (H-106)
MANUFACTURER: HOLOPHANE CAT # PD-70MH-24-L-W-3-CUSTOM COLOR.
LAMP: GE MXR70/U/MED.
ACCESSORIES: CUSTOM GLARE SHIELD WITH CUSTOM COLOR POWDERCOAT FINISH.
REMARKS: CUSTOM COLOR TO MATCH WHITE - FEDERAL SPEC NO. 37722.

8 (H-107)
MANUFACTURER: NORTH STAR LIGHTING CAT # OQ1000W/240/CUSTOM COLOR/CUSTOM LENS ATTACHMENT.
LAMP: GE [illegible]
ACCESSORIES: 4 FLOODLIGHT CLUSTER MOUNTING BRACKET AND MASKING HEAD / FILTER HOOD CAT # OQFH/CUSTOM BLUE LENS
REMARKS: REMOTE HIGH POWER FACTOR BALLAST. CUSTOM COLOR TO MATCH POLE SUPPLY ONE EXTRA "E" TYPE LENS WITH FIXTURE. LENS COLOR TO BE SPECIFIED BY LIGHTING CONSULTANT

8A (H-107A)
SAME AS TYPE 8 (H107) EXCEPT CAT # OQ1000P/240... AND SUPPLY (1) EXTRA TYPE "W" LENS WITH FIXTURE.

8B (H107B)
SAME AS TYPE 8 (H107) EXCEPT CAT # OQ1000E/240... AND SUPPLY (1) EXTRA TYPE "W" LENS WITH FIXTURE.

9 (H-108). NOT USED

10 (H-109)
MANUFACTURER: HOLOPHANE CAT # PD-70MH-24-L-S-3-CUSTOM COLOR.
LAMP: GE MXR70/U/MED.
ACCESSORIES: CUSTOM GLARE SHIELD WITH CUSTOM COLOR POWDERCOAT FINISH.
REMARKS: CUSTOM COLOR TO MATCH WHITE - FEDERAL SPEC. NO. 37722.

11 (H-110) NOT USED

12 (H-111)
MANUFACTURER: HOLOPHANE CAT # PF-400MH-24-L-S-3-CUSTOM COLOR.
LAMP: GE MVR400/U/ED28
ACCESSORIES: CUSTOM GLARE SHIELD WITH CUSTOM COLOR POWDERCOAT FINISH AND CUSTOM COLORED BLUE LENS IN EXTENSION.
REMARKS: CUSTOM COLOR TO MATCH GRAY - FEDERAL SPEC. NO. 36320. LENS COLOR TO BE SPECIFIED BY LIGHTING CONSULTANT.

13 (H-112)
MANUFACTURER: HOLOPHANE CAT # PF-400MH-24-L-W-3-CUSTOM COLOR.
LAMP: GE MVR400/U/ED28.
ACCESSORIES: CUSTOM GLARE SHIELD WITH CUSTOM COLOR POWDERCOAT FINISH AND CUSTOM COLORED BLUE LENS IN EXTENSION.
REMARKS: CUSTOM COLOR TO MATCH GRAY - FEDERAL SPEC. NO. 36320. LENS COLOR TO BE SPECIFIED BY LIGHTING CONSULTANT.

14 (H-113)
MANUFACTURER: HOLOPHANE CAT # PF-250MH-24-L-S-3-CUSTOM COLOR
LAMP: GE MVR250/U
ACCESSORIES: CUSTOM GLARE SHIELD WITH CUSTOM COLOR POWDERCOAT FINISH AND CUSTOM COLORED BLUE LENS IN EXTENSION.
REMARKS: CUSTOM COLOR TO MATCH GRAY - FEDERAL SPEC. NO. 36320. LENS COLOR TO BE SPECIFIED BY LIGHTING CONSULTANT.

15 (H-114)
MANUFACTURER: HOLOPHANE CAT # PF-250MH-24-L-W-3-CUSTOM COLOR
LAMP: GE MVR250/U
ACCESSORIES: CUSTOM GLARE SHIELD WITH CUSTOM COLOR POWDERCOAT FINISH AND CUSTOM COLORED BLUE LENS IN EXTENSION.
REMARKS: CUSTOM COLOR TO MATCH GRAY - FEDERAL SPEC. NO. 36320. LENS COLOR TO BE SPECIFIED BY LIGHTING CONSULTANT.

16 (H-115)
MANUFACTURER: HOLOPHANE CAT # PD-175MH-24-L-W-3-CUSTOM COLOR.
LAMP: GE MVR 175/U/MED.
ACCESSORIES: CUSTOM GLARE SHIELD WITH CUSTOM COLOR POWDERCOAT FINISH AND CUSTOM COLORED BLUE LENS IN EXTENSION.
REMARKS: CUSTOM COLOR TO MATCH GRAY - FEDERAL SPEC. NO. 36320. LENS COLOR TO BE SPECIFIED BY LIGHTING CONSULTANT.

17 (H-116)
MANUFACTURER: HOLOPHANE CAT # PD-100MH-24-L-W-3-CUSTOM COLOR.
LAMP: GE MXR 100/U/MED.
ACCESSORIES: CUSTOM GLARE SHIELD WITH CUSTOM COLOR POWDERCOAT FINISH AND CUSTOM COLORED BLUE LENS IN EXTENSION.
REMARKS: CUSTOM COLOR TO MATCH GRAY - FEDERAL SPEC. NO. 36320. LENS COLOR TO BE SPECIFIED BY LIGHTING CONSULTANT.

18 (H-117) NOT USED

19 (H-118) NOT USED

THE ELECTRICAL COMPONENTS OF THE FIXTURE SHALL BE WARRANTED FOR AT LEAST FIVE (5) YEARS. THE MECHANICAL COMPONENTS SHALL BE WARRANTED FOR AT LEAST TWO (2) YEARS.

FIXTURE MOUNTING BRACKETS
MOUNTING BRACKETS SHALL BE AS DETAILED IN THE PLANS. PAYMENT FOR THEM SHALL BE INCLUDED IN THE BID PRICE FOR "ITEM 625, LUMINAIRE, FLOODLIGHT"

ATTACHMENT OF BRACKET TO CONCRETE
BRACKETS SHALL BE ALIGNED AS PER PLAN. ANCHOR BOLT HOLES FOR 1/2-IN. ø BOLTS SHALL BE DRILLED WITH A ROTARY DRILL USING CARBIDE TIPPED DRILL BITS. VIBRATORY OR HAMMER TYPE TOOLS WILL NOT BE PERMITTED FOR FORMING ANCHOR BOLT HOLES. HILTI STAINLESS STEEL KWIK BOLT II ANCHOR BOLTS, NO. HKB1/2" AS MANUFACTURED BY HILTI CORPORATION, TULSA, OKLAHOMA OR APPROVED EQUAL SHALL BE USED. THE BOLT SHALL BE IMBEDDED A MINIMUM OF 2 1/4 INCHES INTO THE CONCRETE. 1/2 INCH DIA. EXPANSION TYPE ANCHOR BOLTS WITH A MINIMUM PULL OUT CAPACITY OF 3,000 POUNDS SHALL BE USED.

ATTACHMENT OF JUNCTION BOXES TO CONCRETE
JUNCTION BOXES SHALL BE MOUNTED IN SAME MANNER AS BRACKETS EXCEPT USE APPROPRIATE SIZE BOLTS AND ANCHORS FOR BOX MOUNTING HOLES. ANCHOR BOLTS SHALL HAVE A MINIMUM PULL OUT CAPACITY OF 2,000 POUNDS.

CONNECTOR KITS
CABLE CONNECTIONS IN JUNCTION BOXES SHALL BE ACCOMPLISHED BY THE USE OF APPROVED FACTORY PREASSEMBLED CABLE CONNECTOR KITS.

UNTIL CABLE CONNECTIONS HAVE BEEN COMPLETED, ALL CABLE CONNECTOR KITS AND EXPOSED CABLE ENDS SHALL BE ADEQUATELY PROTECTED BY ENCLOSING IN PLASTIC BAGS, TAPING OR OTHER APPROVED MEANS.

CONDUIT ON STRUCTURE
EXPANSION FITTINGS FOR DECORATIVE LIGHTING CIRCUIT CONDUIT ON STRUCTURES SHALL BE OZ TYPE AX, CROUSE-HINDS TYPE XJ-4, APPLETON TYPE XJ-4 OR EQUAL APPROVED BY THE ENGINEER, FOR EXPANSIONS NOT EXCEEDING 4 INCHES, AND OZ TYPE AX-8, OR EQUAL APPROVED BY THE ENGINEER, FOR EXPANSIONS EXCEEDING 4 INCHES. SEE ROADWAY LIGHTING PLAN, SHEET E6 FOR UPPER DECK EXPANSION JOINT LOCATIONS. SEE DECORATIVE LIGHTING PLAN-LOWER DECK, SHEET 100 FOR LOWER DECK EXPANSION JOINT LOCATIONS.

CONTROL CENTERS
THE CONTRACTOR SHALL FURNISH CONTROL CENTERS TO SERVE ALL DECORATIVE LIGHTING CIRCUITS. THE CONTROL CENTER SHALL INCLUDE THE CONTROL EQUIPMENT, MOUNTED AS SHOWN ON LIGHTING DETAIL SHEETS, AND BE AS FOLLOWS:

1. THE CONTROL CENTER SHALL BE A COMPLETE PACKAGE CONTAINING ALL THAT IS NECESSARY TO FUNCTION AS AN INDEPENDENT CONTROL UNIT, INCLUDING ALL INTERNAL WIRING CONNECTIONS.

2. THE CONTROL CENTERS SHALL BE RATED FOR 600 OR 800 AMPERES AT 240V.AC.

3. CIRCUIT PROTECTION SHALL BE AS SHOWN ON THE SINGLE LINE DIAGRAMS AND PANEL SCHEDULES.

4. THE CONTROL ENCLOSURES SHALL BE A MINIMUM NEMA CLASS 4X CORROSION RESISTANT, AND HAVE PROVISIONS FOR A PADLOCK AND INCLUDE BRACKETS FOR WALL MOUNTING INCLUDING ALL NECESSARY MOUNTING HARDWARE.

THE CONTRACTOR SHALL PROVIDE ELECTRICAL SERVICE FROM THE POWER CO. PAD MOUNTED TRANSFORMER TO THE LIGHTING CIRCUITS, INSTALLED IN THE MANNER SHOWN IN THE PLANS. THIS ITEM OF WORK SHALL INCLUDE FURNISHING, AND INSTALLING CONDUITS, LIGHTNING ARRESTOR, AND GROUNDING AT THE BRIDGE, ALL WIRING OF THE SIZE INDICATED ON THE PLANS AND ALL OTHER MATERIALS AND INCIDENTALS AS MAY BE REQUIRED TO COMPLETE THE ITEM OF WORK.

BASIS OF PAYMENT SHALL BE AT THE LUMP SUM BID PRICE FOR ITEM 625 - "CONTROL CENTER", COMPLETE IN PLACE WITH ALL MATERIALS, LABOR AND INCIDENTALS, TESTED AND ACCEPTED.

PADLOCK AND KEYS
EACH ENCLOSURE SHALL BE FURNISHED WITH A PADLOCK. PADLOCKS SHALL BE EITHER BRASS OR BRONZE EQUAL TO MASTER NO. 4 BKA OR WILSON BOHANNON 660A AND SHALL BE KEYED IN ACCORDANCE WITH SUPPLEMENTAL SPECIFICATION SECTION 844.10(4). PARAGRAPH 3, PAYMENT WILL BE INCLUDED IN THE BID FOR THE ITEMS TO BE LOCKED.

HIGH VOLTAGE TEST
A HIGH VOLTAGE DIRECT CURRENT TEST, AS DESCRIBED IN SUPPLEMENTAL SPECIFICATION SECTION 839, SHALL BE PERFORMED ON ALL DISTRIBUTION CABLE TO BE INSTALLED ON THIS PROJECT. THE TEST SHALL NOT BE PERFORMED UNTIL AFTER ALL NEW CONSTRUCTION IN THE IMMEDIATE VICINITY OF THE LOCATION OF THE CABLE RUN BEING TESTED, HAS BEEN COMPLETED. THE TESTING REQUIREMENTS OF 625.22(B) ARE HEREBY WAIVED FOR THOSE CIRCUITS ON WHICH THE HIGH VOLTAGE TEST IS TO BE PERFORMED.

G:\2318\VEMEM\LTNOTES

HOWARD NEEDLES TAMMEN & BERGENDOFF
ARCHITECTS ENGINEERS PLANNERS
HNTB

FHWA REGION	STATE	PROJECT	
5	OHIO		

98
412

CUYAHOGA COUNTY
CUY-6-14.99

DECORATIVE LIGHTING QUANTITIES GENERAL SUMMARY

LINE NUMBER	STRUCTURES													COST PARTICIPATION			ITEM	ITEM EXT.	GRAND TOTAL	UNIT	DESCRIPTION	LINE NUMBER
	CUY-6-14.99	CUY-6-14.99	CUY-6-14.99	CUY-6-14.99	CUY-6-14.99	CUY-6-14.99	CUY-6-14.99	CUY-6-14.99	CUY-6-14.99	CUY-6-14.99												
	SHEET NO.										SHEET NO.											
	100	101	102	103	104	105	106	107	108	109	97	130C										
	PARTICIPATION																					
1																						1
2																						2
3	784		204	120	336	100	200	192	144	24							625	00800	2,104	EACH	CONNECTOR KIT, TYPE V	3
4	13,960	5,320							160								625	23200	19,440	L.F.	NO. 4 AWG 5000 VOLT DISTRIBUTION CABLE	4
5		9,560															625	23300	9,560	L.F.	NO. 2 AWG 5000 VOLT DISTRIBUTION CABLE	5
6	6,990	6,940	4,000	1,980	11,100	2,160	4,390	4,080	2,710	990							625	23302	45,340	L.F.	NO. 6 AWG 5000 VOLT DISTRIBUTION CABLE	6
7	3,920		1,020	600	1,680	500	1000	960	720	120							625	98100	10,520	L.F.	NO. 10 AWG 600 VOLT CONNECTION CABLE	7
8																						8
9																						9
10	784		204	120	336	100	200	192	144	24							625	25000	2,104	L.F.	CONDUIT 3/4", SEALTITE	10
11	6,580	6,940	1,230	620	3,620	620	1,460	1,360	930	330							625	25401	23,690	L.F.	CONDUIT 2" RIGID, 713.04, AS PER PLAN	11
12																						12
13																						13
14																						14
15	344		28	16		12	24	24	16	6							625	27600	469	EACH	LUMINAIRE, MISC, 50W HPS, WIDE BEAM, AS PER PLAN	15
16	48		66	40	156	34	68	64	48								625	27600	524	EACH	LUMINAIRE, MISC, 100W HPS, WIDE BEAM, AS PER PLAN	16
17			8	4	4	4	8	8	8	6							625	27600	44	EACH	LUMINAIRE, MISC, 250W HPS, WIDE BEAM, AS PER PLAN	17
18					4												625	27600	4	EACH	LUMINAIRE MISC, 250W HPS, NARROW VERTICAL, WIDE HORIZONTAL BEAM, AS PER PLAN	18
19					4												625	27600	10	EACH	LUMINAIRE, MISC, 250W HPS, SPOT DISTRIBUTION, AS PER PLAN	19
20																						20
21																						21
22											1						625	34001	1	EACH	POWER SERVICE, AS PER PLAN	22
23											LUMP						625	38000	LUMP		HIGH VOLTAGE TEST	23
24																						24
25																						25
26											LUMP						625	98200	LUMP		CONTROL CENTER	26
27																						27
28																						28
29																						29
30																						30
31												7,300					SPECIAL	62598300	7,300	L.F.	DUCT 5" FIBERGLASS REINFORCED EPOXY	31
32																						32
33												220					SPECIAL	62598400	220	EACH	DUCT SUPPORT	33
34																						34
35												6					SPECIAL	62598500	6	EACH	CPP SPLICING CHAMBER	35
36																						36
37																						37
38																						38
39																						39
40																						40
41																						41
42																						42
43																						43
44																						44
45																						45
46																						46
47																						47
48																						48
49																						49
50																						50
51																						51
52																						52
53																						53
54																						54
55																						55
56																						56
57																						57
58																						58
59																						59
60																						60

HOWARD NEEDLES TAMMEN & BERGENDOFF
ARCHITECTS ENGINEERS PLANNERS HNTB

MADE BY: F.E.G. DATE: 5/26/94
DRAWN BY: P.J.K. DATE: 5/27/94
CHECKED BY: N.C.Y. DATE: -/--/--
SCALE: None

21471/DDBGM 1=1

FHWA REGION	STATE	PROJECT	
5	OHIO		

98R / 412R

CUYAHOGA COUNTY
CUY-6-14.99

DECORATIVE LIGHTING QUANTITIES GENERAL SUMMARY

LINE NUMBER	STRUCTURES CUY-6-14.99 SHEET NO. 100A	100B	104R	105R	106R	130BR	130M				97R	130CR		DEDUCT * ALTERNATE NO. 1			ITEM	ITEM EXT.	GRAND TOTAL	UNIT	DESCRIPTION	LINE NUMBER
1																						1
2																						2
3	504	324	272	514	330									512			625	00800	1,944	EACH	CONNECTOR KIT, TYPE V	3
4																						4
5																						5
6	8,440	4,570	2080	3,510										6,960			625	23200	18,600	L.F.	NO. 4 AWG 5000 VOLT DISTRIBUTION CABLE	6
7	2,600	1,540			8,190									1,540				23300	12,330	L.F.	NO. 2 AWG 5000 VOLT DISTRIBUTION CABLE	7
8	5190	4,870	5910	7,430	7,390									4,940				23302	30,790	L.F.	NO. 6 AWG 5000 VOLT DISTRIBUTION CABLE	8
9																						9
10	2520	1620	5620	2570	1650									2,560				23400	13,980	L.F.	NO. 10 AWG 600 VOLT CONNECTION CABLE	10
11																						11
12		3,060															625		3,060	L.F.	NO. 1 AWG 5000 VOLT DISTRIBUTION CABLE	12
13																						13
14	504	324	272	514	330									512			625	25500	1,944	L.F.	CONDUIT 3/4", SEALTITE	14
15	4760	4,990	2880	3,310	4,720									4,440			625	25803	20,660	L.F.	CONDUIT 2" RIGID, 713.04, AS PER PLAN	15
16																						16
17	160	96												256			625		256	EACH	TYPE 1 LTG. FIXTURE, 70W MH AS PER PLAN	17
18	92	66															625		158	EACH	TYPE 2 LTG. FIXTURE, 175W MH AS PER PLAN	18
19				66	36												625		102	EACH	TYPE 3 LTG. FIXTURE, 175W MH AS PER PLAN	19
20				33	18												625		51	EACH	TYPE 4 LTG. FIXTURE, 175W MH AS PER PLAN	20
21				50	6												625		56	EACH	TYPE 5 LTG. FIXTURE, 175W MH AS PER PLAN	21
22				16	23												625		39	EACH	TYPE 5A LTG. FIXTURE, 100W MH AS PER PLAN	22
23				14	16												625		30	EACH	TYPE 5B LTG. FIXTURE, 100W MH AS PER PLAN	23
24				76	40												625		116	EACH	TYPE 6 LTG. FIXTURE, 175W MH AS PER PLAN	24
25					24												625		24	EACH	TYPE 7 LTG. FIXTURE, 70W MH AS PER PLAN	25
26			12														625		12	EACH	TYPE 8 LTG. FIXTURE, 1000W MH AS PER PLAN	26
27			4														625		4	EACH	TYPE 8A LTG. FIXTURE, 1000W MH AS PER PLAN	27
28			8														625		8	EACH	TYPE 8B LTG. FIXTURE, 1000W MH AS PER PLAN	28
29					12												625		12	EACH	TYPE 10 LTG. FIXTURE, 70W MH AS PER PLAN	29
30			12														625		12	EACH	TYPE 12 LTG. FIXTURE, 400W MH AS PER PLAN	30
31			12														625		12	EACH	TYPE 13 LTG. FIXTURE, 400W MH AS PER PLAN	31
32			4														625		4	EACH	TYPE 14 LTG. FIXTURE, 250W MH AS PER PLAN	32
33			8														625		8	EACH	TYPE 15 LTG. FIXTURE, 250W MH AS PER PLAN	33
34			68														625		68	EACH	TYPE 16 LTG. FIXTURE, 175W MH AS PER PLAN	34
35			8														625		8	EACH	TYPE 17 LTG. FIXTURE, 100W MH AS PER PLAN	35
36																						36
37																						37
38																						38
39				9	9												625		18	EACH	PIER BRACKETS TYPE "A" + "C" THRU "H" AS PER PLAN	39
40																						40
41					4												625		4	EACH	PIER BRACKETS TYPE "B" AS PER PLAN	41
42																						42
43						1	1										625	34001	2	EACH	POWER SERVICE, AS PER PLAN	43
44																						44
45											LUMP						625	38000	LUMP	LUMP	HIGH VOLTAGE TEST	45
46																						46
47											LUMP						625	98200	LUMP	LUMP	CONTROL CENTERS	47
48																						48
49																						49
50												7,500					SPECIAL	62598300	7,500	L.F.	DUCT, 5" FIBERGLASS REINFORCED EPOXY	50
51																						51
52												225					SPECIAL	62598400	225	EACH	DUCT SUPPORT	52
53																						53
54												6					SPECIAL	62598500	6	EACH	CPP SPLICING CHAMBER	54
55																						55
56																						56
57																						57
58																						58
59																						59
60																						60

* NOTE: QUANTITIES TO BE DEDUCTED FROM GRAND TOTAL IF ALTERNATE NO. 1 IS ADOPTED.

HOWARD NEEDLES TAMMEN & BERGENDOFF
ARCHITECTS ENGINEERS PLANNERS HNTB

MADE BY: F.E.G. DATE: 07/17/95
DRAWN BY: V.P. DATE: 07/17/95
CHECKED BY: N.C.T. DATE: 07/17/95
SCALE: None

G:\23318\VENEA\LTGSUM

FHWA REGION	STATE	PROJECT	
5	OHIO		

CUYAHOGA COUNTY
CUY-6-14.99

DECORATIVE LIGHTING QUANTITIES SUB-SUMMARY

LINE NUMBER	STATION#	STATION#	SIDE	625																	SPECIAL										LINE NUMBER
				CONNECTOR KIT TYPE V	NO. 4 AWG 5000V DISTRIBUTION CABLE	NO. 2 AWG 5000V DISTRIBUTION CABLE	NO. 6 AWG 5000V DISTRIBUTION CABLE	NO. 10 AWG 600V CONNECTING WIRE		CONDUIT 3/4", SEALTITE	CONDUIT 2", RIGID, 713.04 AS PER PLAN			LUMINAIRE, MISC, 50W HPS, WIDE BEAM, AS PER PLAN	LUMINAIRE, MISC, 100W HPS, WIDE BEAM, AS PER PLAN	LUMINAIRE, MISC, 250W HPS, WIDE BEAM, AS PER PLAN	LUMINAIRE, MISC, 250W HPS, NARROW VERTICAL, WIDE HORIZONTAL BEAM, AS PER PLAN	LUMINAIRE, MISC, 250W HPS, SPOT DISTRIBUTION, AS PER PLAN	POWER SERVICE, AS PER PLAN	HIGH VOLTAGE TEST		DUCT, 5" FIBERGLASS REINFORCED EPOXY	DUCT SUPPORT	CPP SPLICING CHAMBER							
				EACH	L.F.	L.F.	L.F.	L.F.		L.F.	L.F.			EACH	EACH	EACH	EACH	EACH	EACH	LUMP		L.F.	EACH	EACH							
1	SHEET 100																														1
2	BRIDGE	CUY-6-14.99	LT/RT	784	13,960		6,990	3,920		784	6,580			343	48																2
3	TOTAL	SHEET 100		784	13,960		6,990	3,920		784	6,580			343	48																3
4																															4
5	SHEET 101																														5
6	BRIDGE	CUY-6-14.99	LT/RT		5,320	9,560	6,940				6,940																				6
7	TOTAL	SHEET 101			5,320	9,560	6,940				6,940																				7
8																															8
9	SHEET 102																														9
10	106+15	109+06.38	LT/RT	204			4,000	1,020		204	1,230			28	66	8															10
11	TOTAL	SHEET 102		204			4,000	1,020		204	1,230			28	66	8															11
12																															12
13	SHEET 103																														13
14	109+06.38	111+15.50	LT/RT	120			1,980	600		120	620			16	40	4															14
15	TOTAL	SHEET 103		120			1,980	600		120	620			16	40	4															15
16																															16
17	SHEET 104																														17
18	111+15.50	117+06.50	LT/RT	336			11,100	1,680		336	3,620				156	4	4	4													18
19	TOTAL	SHEET 104		336			11,000	1,680		336	3,620				156	4	4	4													19
20																															20
21	SHEET 105																														21
22	117+06.50	118+84.50	LT/RT	100			2,160	500		100	620			12	34	4															22
23	TOTAL	SHEET 105		100			2,160	500		100	620			12	34	4															23
24																															24
25	SHEET 106																														25
26	118+84.50	121+96	LT/RT	200			4,390	1,000		200	1,463			24	68	8															26
27	TOTAL	SHEET 106		200			4,390	1,000		200	1,463			24	68	8															27
28																															28
29	SHEET 107																														29
30	121+96	124+82.25	LT/RT	192			4,080	960		192	1,361			24	64	8															30
31	TOTAL	SHEET 107		192			4,080	960		192	1,361			24	64	8															31
32																															32
33	SHEET 108																														33
34	124+82.25	126+96	LT/RT	144	160		2,710	720		144	928			16	48	8															34
35	TOTAL	SHEET 108		144	160		2,710	720		144	928			16	48	8															35
36																															36
37	SHEET 109																														37
38	126+96	128+05.88	LT/RT	24			990	120		24	330			6				6													38
39	TOTAL	SHEET 109		24			990	120		24	330			6				6													39
40																															40
41	SHEET 130C																														41
42	93+00	117+32	LT/RT																		7,300	220	6								42
43	TOTAL	SHEET 130C																			7,300	220	6								43
44																															44
45																															45
46																															46
47																															47
48																															48
49																															49
50																															50
51																															51
52																															52
53																															53
54																															54
55	TOTAL			2,104	19,440	9,560	45,340	10,520		2,104	23,692			469	524	44	4	10	1	1		7,300	220	6							55

HOWARD NEEDLES TAMMEN & BERGENDOFF
ARCHITECTS ENGINEERS PLANNERS HNTB

MADE BY: F.E.G. DATE: 5/26/94
DRAWN BY: P.J.K. DATE: 5/27/94
CHECKED BY: N.C.T. DATE:
SCALE: None

*ALL STATIONS

℄ OF VETERANS MEMORIAL BRIDGE UNLESS NOTED.

21471/LTSUBSUM 1=1

FHWA REGION	STATE	PROJECT	
5	OHIO		

99R / 412R

CUYAHOGA COUNTY
CUY-6-14.99

DECORATIVE LIGHTING QUANTITIES SUB-SUMMARY

LINE NUMBER	STATION *	STATION *	SIDE	Connector Kit Type V	No. 4 AWG 5000V Distribution Cable	No. 2 AWG 5000V Distribution Cable	No. 6 AWG 5000V Distribution Cable		No. 10 AWG 600V Connection Cable	No. 1 AWG 5000V Distribution Cable	Conduit 3/4" Sealtite	Conduit 2" Rigid 713.04 As Per Plan	Type 1 Lighting Fixture 70W MH As Per Plan Deduct Alternate #1	Type 2 Lighting Fixture 175W MH As Per Plan	Type 3 Lighting Fixture 175W MH As Per Plan	Type 4 Lighting Fixture 100W MH As Per Plan	Type 5 Lighting Fixture 175W MH As Per Plan	Type 5A Lighting Fixture 100W MH As Per Plan	Type 5B Lighting Fixture 100W MH As Per Plan	Type 6 Lighting Fixture 175W MH As Per Plan	Type 7 Lighting Fixture 70W MH As Per Plan	Type 8 Lighting Fixture 1000W MH As Per Plan	Type 8A Lighting Fixture 1000W MH As Per Plan	Type 8B Lighting Fixture 1000W MH As Per Plan	Type 10 Lighting Fixture 70W MH As Per Plan	Type 12 Lighting Fixture 400W MH As Per Plan	Type 13 Lighting Fixture 400W MH As Per Plan	Type 14 Lighting Fixture 250W MH As Per Plan	Type 15 Lighting Fixture 250W MH As Per Plan	Type 16 Lighting Fixture 175W MH As Per Plan	Type 17 Lighting Fixture 100W MH As Per Plan			Pier Brackets Type "A" and "C" Thru "H" As Per Plan	Pier Brackets Type "B" As Per Plan			LINE NUMBER
				625																																			
				EACH	L.F.	L.F.	L.F.		L.F.	L.F.	L.F.	L.F.	EACH	EACH	EACH	EACH	EACH	EACH	EACH	EACH	EACH	EACH	EACH	EACH	EACH	EACH	EACH	EACH	EACH	EACH			EACH	EACH			
1	SHEET	100A																																					1
2	106+15	111+15.50	LT./RT.	256	5,840		2,630		1,280		256	2,320	82	46																									2
3	117+06.50	121+96	LT./RT.	248	2,600	2,600	2,560		1,240		248	2,440	78	46																									3
4	TOTAL	SHEET 100A		504	8,440	2,600	5,190		2,520		504	4,760	160	92																									4
5																																							5
6	SHEET	100B																																					6
7	121+96	126+21	LT./RT.	216	3,450	1,540	3,750		1,080	1,940	216	3,870	68	40																									7
8	126+03	128+81	LT./RT.	108	1,120		1,120		540	1,120	108	1,120	28	26																									8
9	TOTAL	SHEET 100B		324	4,570	1,540	4,870		1,620	3,060	324	4,990	96	66																									9
10																																							10
11	SHEET	104R																																					11
12	111+15.50	117+06.50	LT./RT.	272	2080		5,910		5,620		272	2,880										12	4	8		12	12	4	8	68	8							12
13	TOTAL	SHEET 104R		272	2080		5,910		5,620		272	2,880										12	4	8		12	12	4	8	68	8							13
14																																							14
15	SHEET	105R																																					15
16	106+15	111+15.50	LT./RT.	206	1,400		3,330		1,030		206	1,430			30	15	20	4	8	26														3	2			16
17	117+06	121+96	LT./RT.	308	2,110		4,110		1,540		308	1,880			36	18	30	12	6	50														6	2			17
18	TOTAL	SHEET 105R		514	3,510		7,430		2,570		514	3,310			66	33	50	16	14	76														9	4			18
19																																							19
20	SHEET	106R																							6									6					20
21	121+98	126+83	LT./RT.	256		7,900	6,590		1,280		256	4,390			36	18	6	16	8	26	12				6									3				21
22	126+83	128+81	LT./RT.	74		290	800		370		74	330						7	8	14	12				6									9				22
23	TOTAL	SHEET 106R		330		8,190	7,390		1,650		330	4,720			36	18	6	23	16	40	24				12													23
24																																							24
25																																							25
26																																							26
27																																							27
28																																							28
29																																							29
30																																							30
31																																							31
32																																							32
33																																							33
34																																							34
35																																							35
36																																							36
37																																							37
38																																							38
39																																							39
40																																							40
41																																							41
42																																							42
43																																							43
44																																							44
45																																							45
46																																							46
47																																							47
48																																							48
49																																							49
50																																							50
51																																							51
52																																							52
53																																							53
54																																							54
			TOTAL	1,944	18,600	12,330	30,790		13,980	3,060	1,944	20,660	256	158	102	51	56	39	30	116	24	12	4	8	12	12	12	4	8	68	8			18	4			

HOWARD NEEDLES TAMMEN & BERGENDOFF
ARCHITECTS ENGINEERS PLANNERS HNTB

MADE BY: F.E.G. DATE: 07/17/95
DRAWN BY: V.P. DATE: 07/17/95
CHECKED BY: N.C.Y. DATE: 07/17/95
SCALE: None

*ALL STATIONS

℄ OF VETERANS MEMORIAL BRIDGE UNLESS NOTED.

G:\23316\VETMEM\TSUBSUM 1=1

DECORATIVE LIGHTING QUANTITIES SUB-SUMMARY

FHWA REGION	STATE	PROJECT	
	OHIO		

100
412

CUYAHOGA COUNTY
CUY-6-14.99

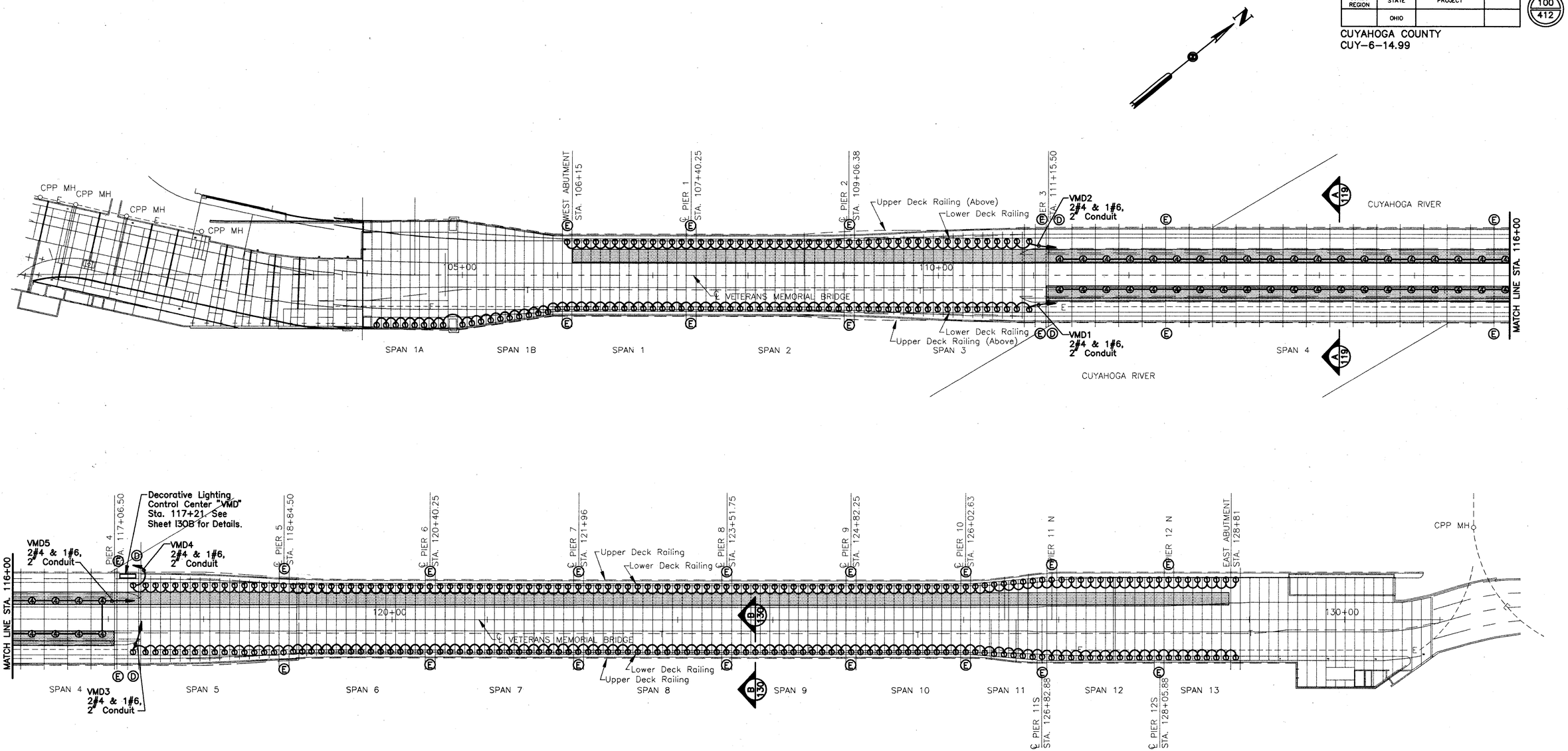

LEGEND

- INDICATES AREAS OPEN TO BELOW
- 50W HPS, WIDE BEAM
- 100W HPS, WIDE BEAM
- 2" CONDUIT, 713.04 WITH 2#4 & 1#6. 5000V UNLESS NOTED.

50 0 50 100
SCALE IN FEET

HOWARD NEEDLES TAMMEN & BERGENDOFF
ARCHITECTS ENGINEERS PLANNERS
HNTB

MADE BY: F.E.G. DATE: 2/21/94
DRAWN BY: P.J.K. DATE: 2/22/94
CHECKED BY: N.C.T. DATE: /--/94
SCALE: 1"=50'

DECORATIVE LIGHTING PLAN-LOWER DECK

FHWA REGION	STATE	PROJECT	
	OHIO		

100A
412R

CUYAHOGA COUNTY
CUY-6-14.99

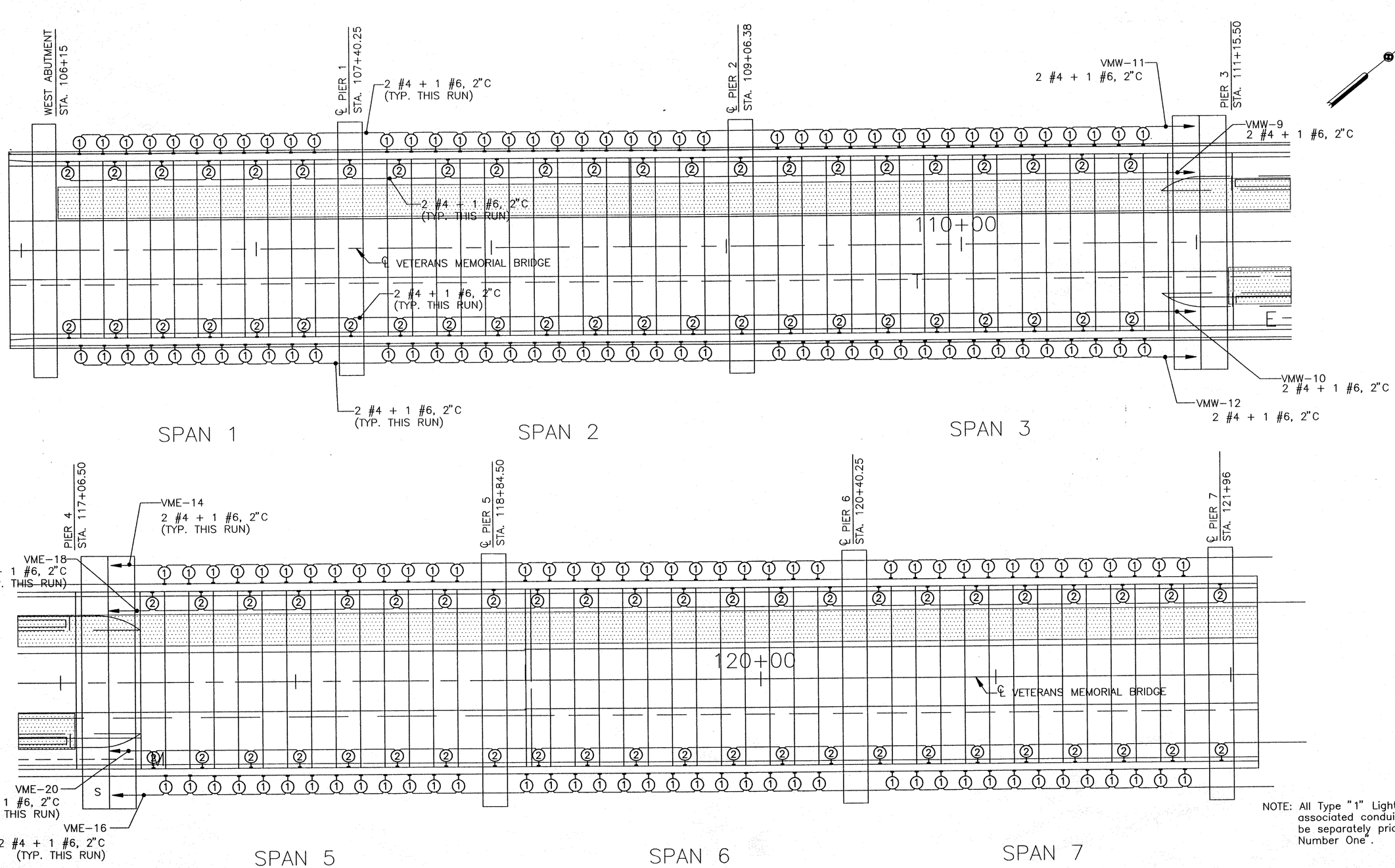

NOTE: All Type "1" Lighting Fixtures and associated conduit and wire shall be separately priced as "Alternate Number One".

HOWARD NEEDLES TAMMEN & BERGENDOFF
ARCHITECTS ENGINEERS PLANNERS HNTB

MADE BY: F.E.G. DATE 07/17/95
DRAWN BY: L.M.L. DATE 07/17/95
CHECKED BY: W.C.Y. DATE 07/17/95
SCALE: 1"=20'

DECORATIVE LIGHTING PLAN-LOWER DECK PART A

FHWA REGION	STATE	PROJECT	
	OHIO		

100B / 412B

CUYAHOGA COUNTY
CUY-6-14.99

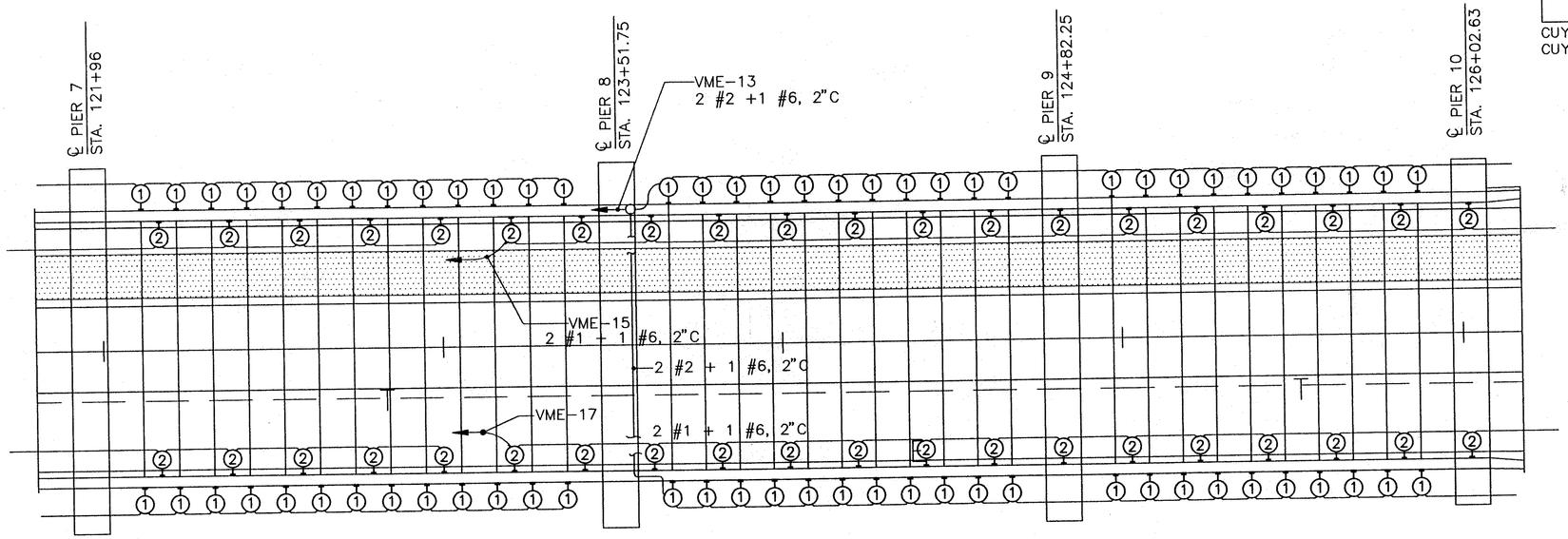

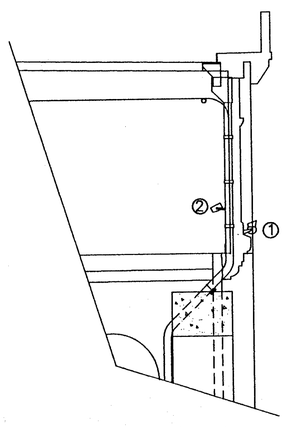

TYPICAL PORT HOLE SECTION

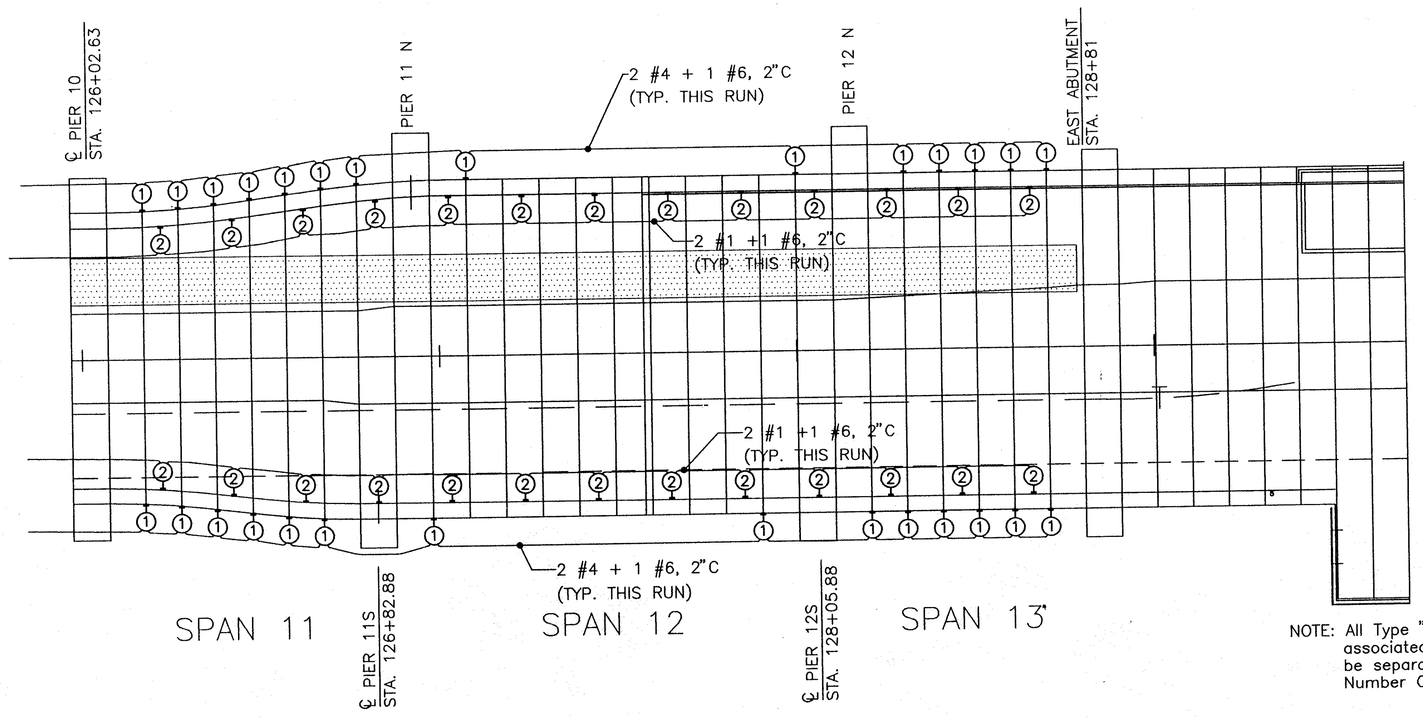

NOTE: All Type "1" Lighting Fixtures and associated conduit and wire shall be separately priced as "Alternate Number One".

HOWARD NEEDLES TAMMEN & BERGENDOFF
ARCHITECTS ENGINEERS PLANNERS
HNTB

MADE BY: F.E.G. DATE 07/17/95
DRAWN BY: P.J.K. DATE 07/17/95
CHECKED BY: N.C.Y. DATE 07/17/95
SCALE:
LTG106

DECORATIVE LIGHTING PLAN-LOWER DECK **PART B**

A-2

FHWA REGION	STATE	PROJECT	
5	OHIO		

101
412

CUYAHOGA COUNTY
CUY-6-14.99

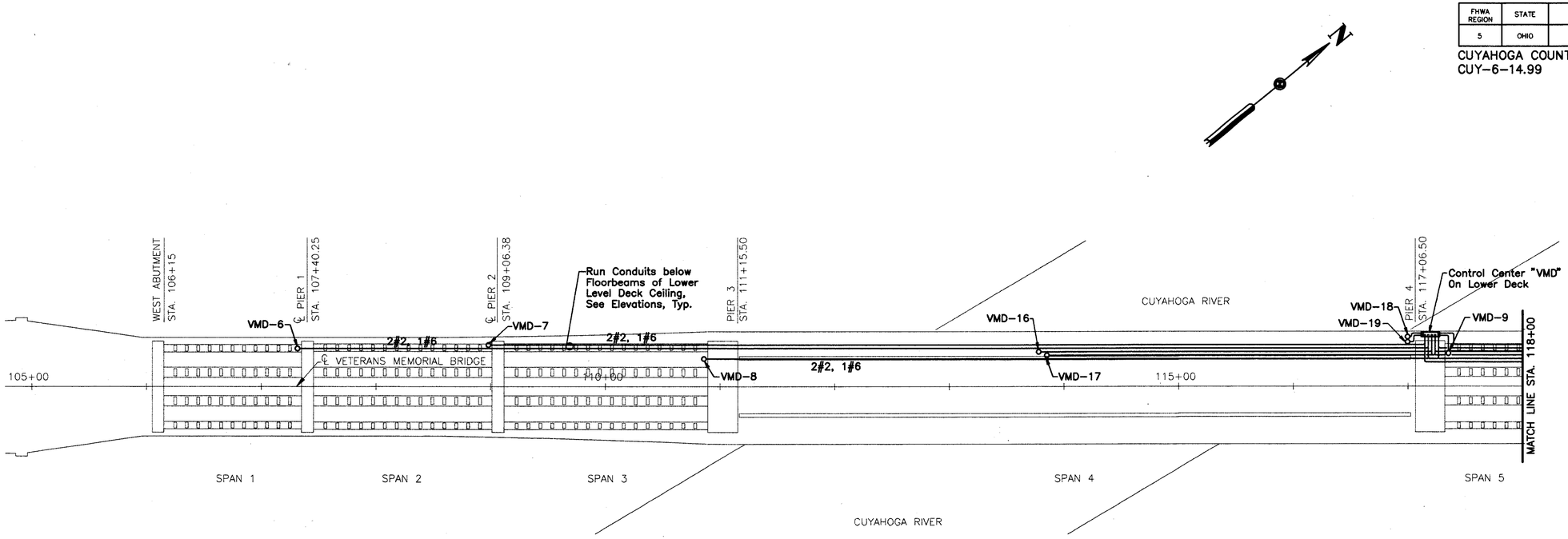

Note:

1.) All conduit and wire 2#4 & 1#6, 2" C unless noted.

2.) See individual Arch Lighting Plans for circuit continuations.

50 0 50 100
SCALE IN FEET

HOWARD NEEDLES TAMMEN & BERGENDOFF
ARCHITECTS ENGINEERS PLANNERS
HNTB

MADE BY: F.E.G. DATE: 3/22/94
DRAWN BY: P.J.K. DATE: 3/23/94
CHECKED BY: N.C.Y. DATE: -/--/94
SCALE: 1"=50'

DECORATIVE LIGHTING PLAN-LOWER ARCHES

FHWA REGION	STATE	PROJECT	
5	OHIO		

102/412

CUYAHOGA COUNTY
CUY-6-14.99

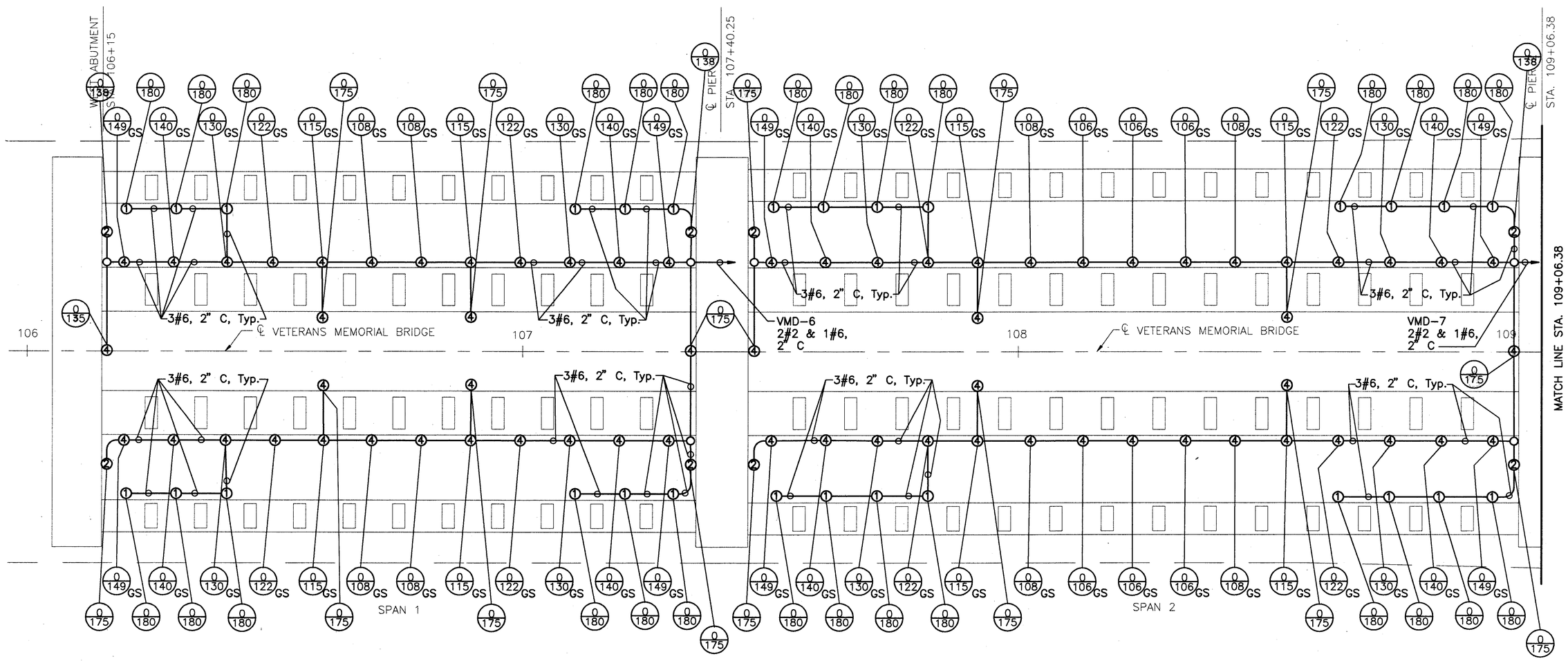

LEGEND

① 50W HPS-WIDE BEAM

② 250W HPS-WIDE BEAM

④ 100W HPS-WIDE BEAM

R45/125 DEGREE OF ORIENTATION; R=RIGHT, L=LEFT
DEGREE OF TILT

GS GLARE SHIELD

Notes:

1. Install Type ② and ④ luminaires with wire entry away from wall. See Sheet 130.

2. For Span 1 and 2 Elevations see Sheet 110.

10 0 10 20
SCALE IN FEET

HOWARD NEEDLES TAMMEN & BERGENDOFF
ARCHITECTS ENGINEERS PLANNERS HNTB

MADE BY: F.E.G. DATE: 3/22/94
DRAWN BY: P.J.K. DATE: 3/23/94
CHECKED BY: N.C.Y. DATE: /--/94
SCALE: 1"=10'

21471/ARCHPL 1=10'

ARCH LIGHTING PLAN-SPANS 1 & 2

FHWA REGION	STATE	PROJECT	
5	OHIO		

CUYAHOGA COUNTY
CUY-6-14.99

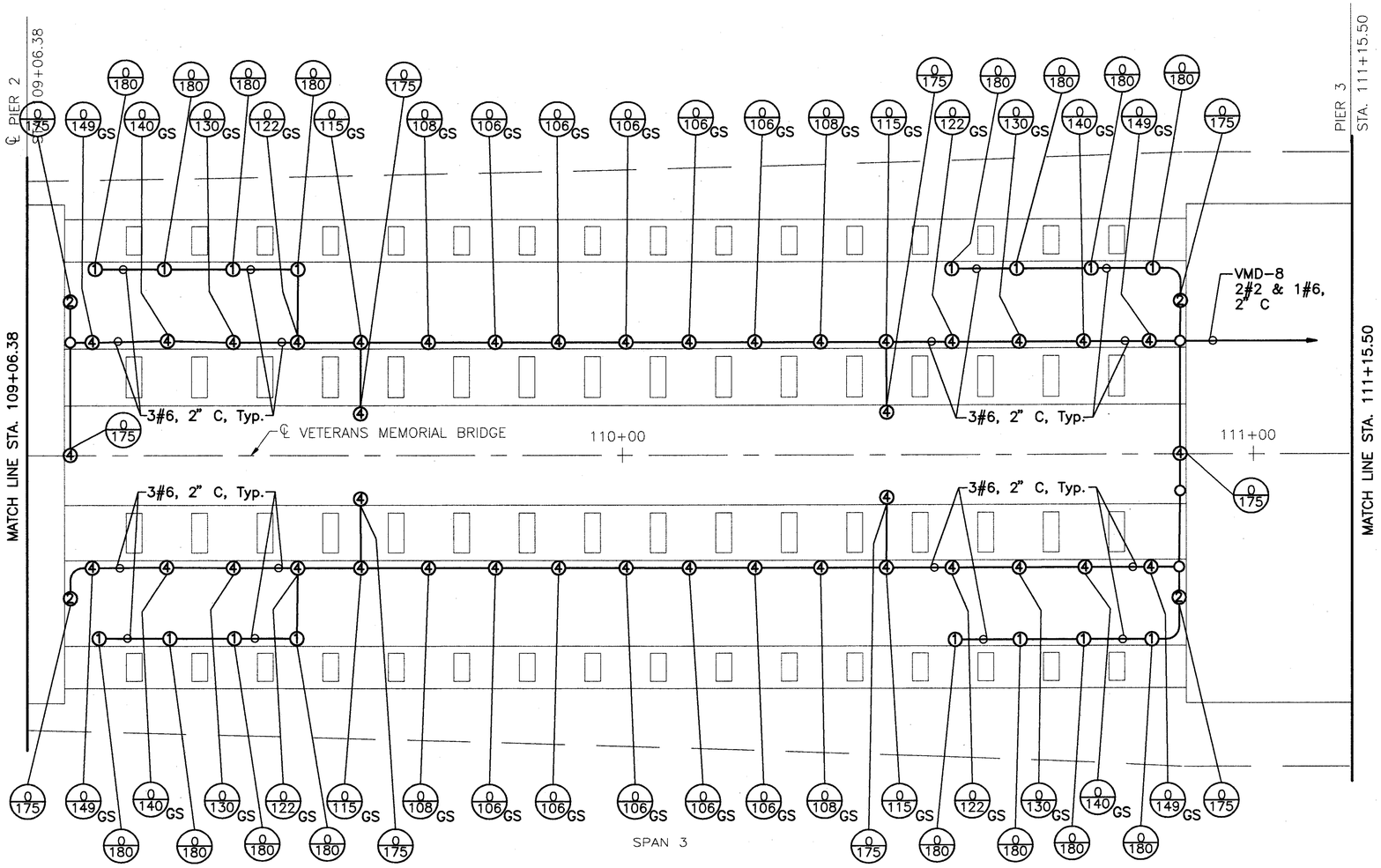

Notes:

1. Install Type ② and ④ luminaires with wire entry away from wall. See Sheet 130.
2. For Span 3 Elevation, see Sheet 111.

LEGEND

① 50W HPS-WIDE BEAM

② 250W HPS-WIDE BEAM

④ 100W HPS-WIDE BEAM

R45/125 DEGREE OF ORIENTATION; R=RIGHT, L=LEFT
DEGREE OF TILT

GS GLARE SHIELD

10 0 10 20
SCALE IN FEET

HOWARD NEEDLES TAMMEN & BERGENDOFF
ARCHITECTS ENGINEERS PLANNERS HNTB

MADE BY: F.E.G. DATE: 3/22/94
DRAWN BY: P.J.K. DATE: 3/23/94
CHECKED BY: N.C.Y. DATE: --/--/94
SCALE: 1"=10'

21471/MODEL 1=10'

ARCH LIGHTING PLAN-SPAN 3

FHWA REGION	STATE	PROJECT	
5	OHIO		

104/412

CUYAHOGA COUNTY
CUY-6-14.99

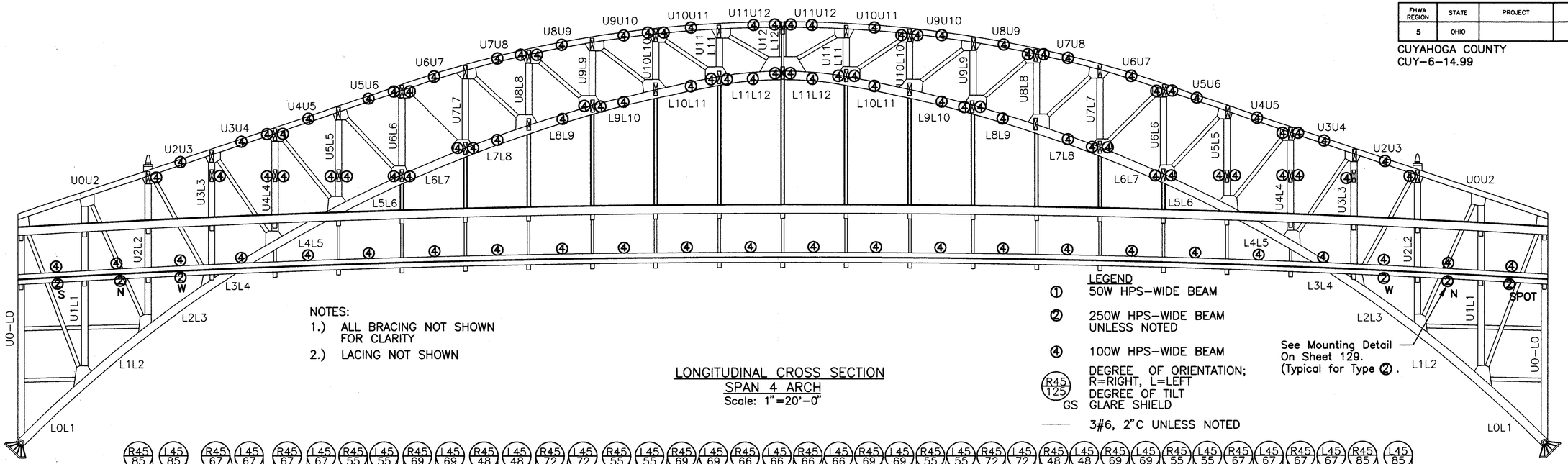

NOTES:
1.) ALL BRACING NOT SHOWN FOR CLARITY
2.) LACING NOT SHOWN

LEGEND
① 50W HPS-WIDE BEAM
② 250W HPS-WIDE BEAM UNLESS NOTED
④ 100W HPS-WIDE BEAM
R45/125 DEGREE OF ORIENTATION; R=RIGHT, L=LEFT DEGREE OF TILT
GS GLARE SHIELD
—— 3#6, 2"C UNLESS NOTED

See Mounting Detail On Sheet 129. (Typical for Type ②.

LONGITUDINAL CROSS SECTION
SPAN 4 ARCH
Scale: 1"=20'-0"

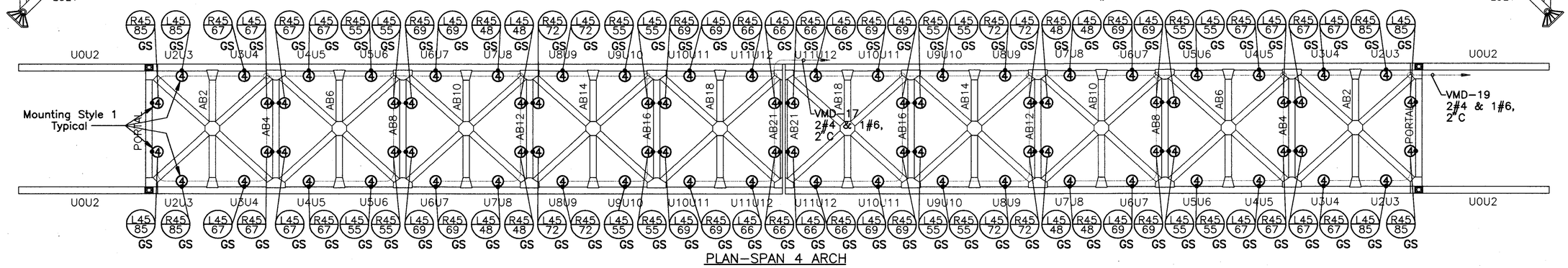

PLAN-SPAN 4 ARCH
UPPER CHORD
Scale: 1"=20'-0"

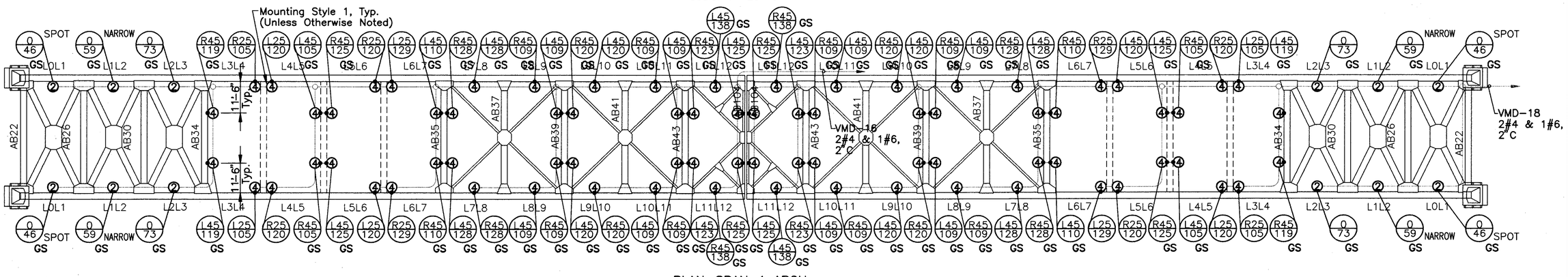

PLAN-SPAN 4 ARCH
LOWER CHORD
Scale: 1"=20'-0"

HOWARD NEEDLES TAMMEN & BERGENDOFF
ARCHITECTS ENGINEERS PLANNERS
HNTB

MADE BY: F.E.G. DATE: 2/21/94
DRAWN BY: P.J.K. DATE: 2/23/94
CHECKED BY: N.G.Y. DATE:
SCALE: 1"=20'-0"

21471/SPAN4 1=1

SPAN 4 LIGHTING DETAILS

FHWA REGION	STATE	PROJECT	
5	OHIO		

104R
412R

CUYAHOGA COUNTY
CUY-6-14.99

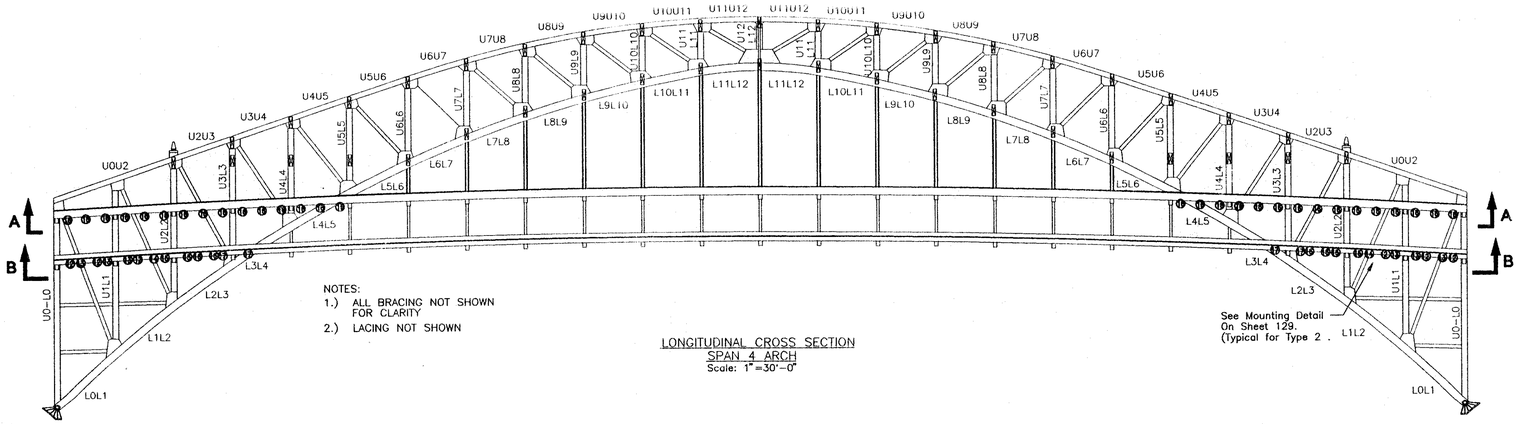

LONGITUDINAL CROSS SECTION
SPAN 4 ARCH
Scale: 1"=30'-0"

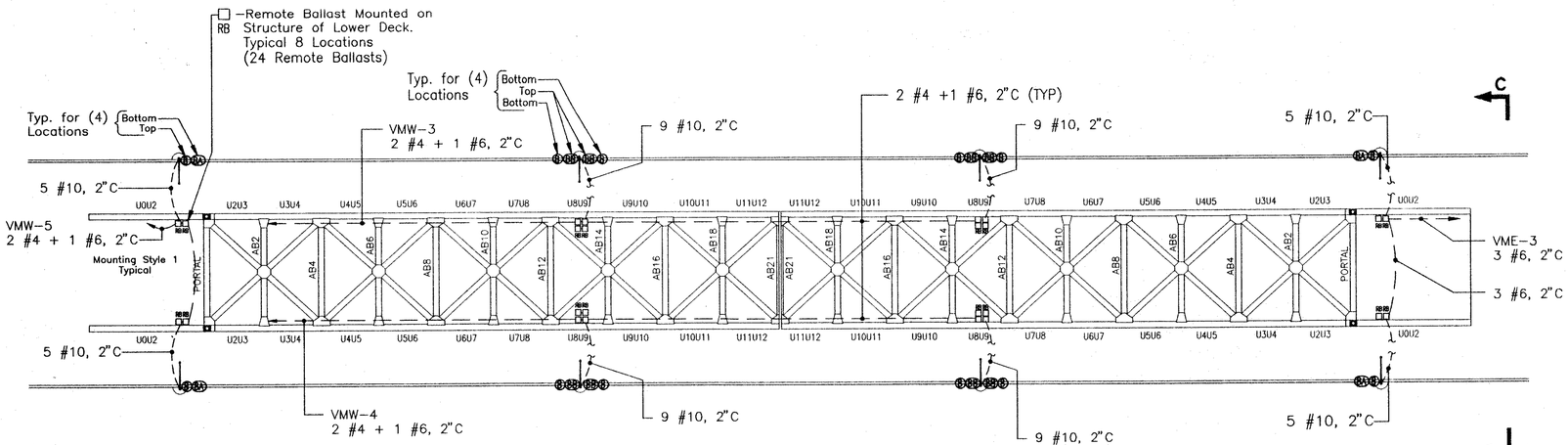

PLAN-SPAN 4 ARCH
UPPER CHORD
Scale: 1"=30'-0"

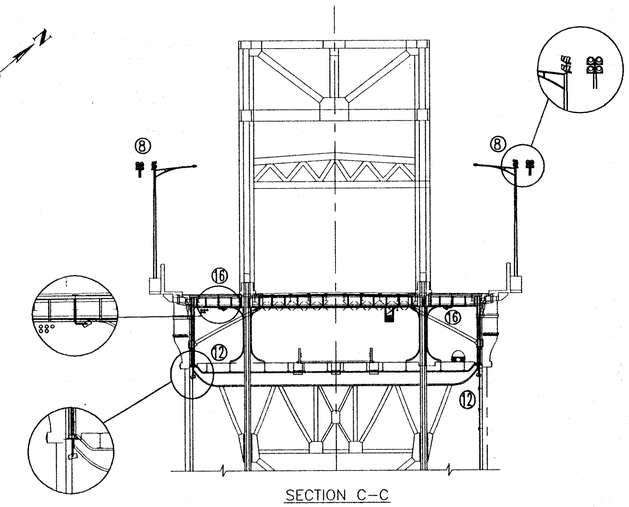

SECTION C-C

LEGEND

1	H-100 70W MH		
2	H-101 175W MH	10	H-109 70W MH
3	H-102 175W MH	11	NOT USED
4	H-103 175W MH	12	H-111 400W MH
5	H-104 175W MH	13	H-112 400W MH
5A	H-104A 100W MH	14	H-113 250W MH
5B	H-104B 100W MH	15	H-114 250W MH
6	H-105 175W MH	16	H-115 175W MH
7	H-106 70W MH	17	H-116 100W MH
8	H-107 1000W MH	18	NOT USED
8A	H-107A 1000W MH	19	NOT USED
8B	H-107B 1000W MH	RB	1000W, 240V REMOTE BALLAST
9	NOT USED	□	NEMA 4X ENCLOSURE
		——	3#6, 2"C UNLESS NOTED

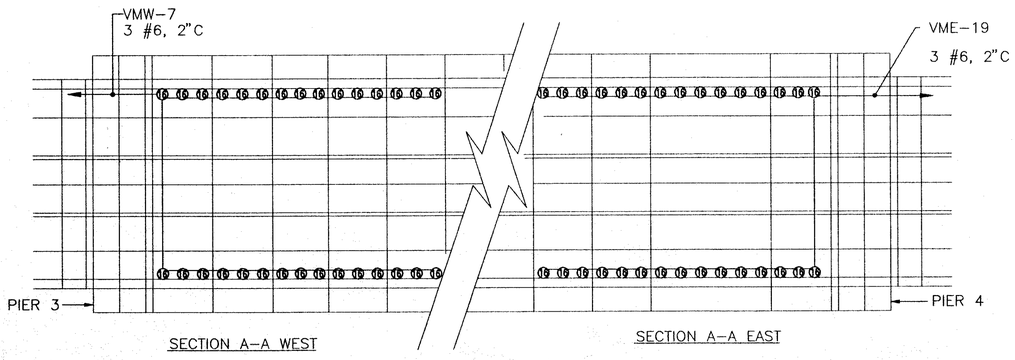

SECTION A-A WEST

SECTION A-A EAST

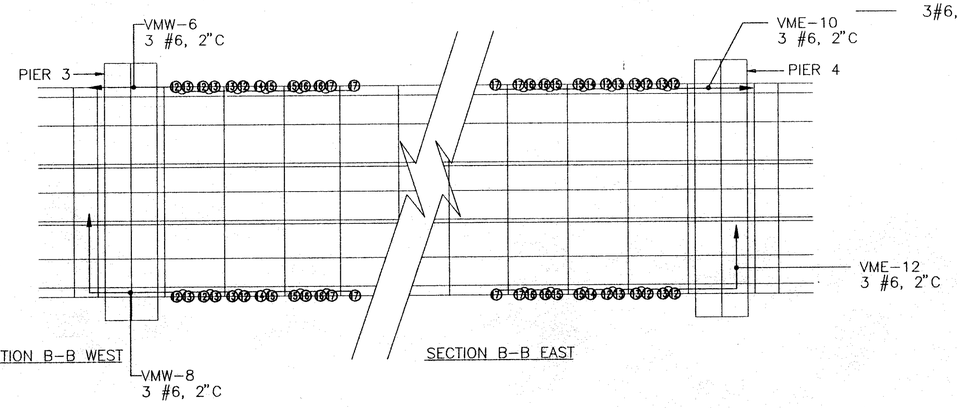

SECTION B-B WEST

SECTION B-B EAST

HOWARD NEEDLES TAMMEN & BERGENDOFF
ARCHITECTS ENGINEERS PLANNERS
HNTB

MADE BY: F.E.G. DATE 07/17/95
DRAWN BY: P.J.K. DATE 07/17/95
CHECKED BY: N.C.Y. DATE 07/17/95
SCALE: 1"=30'-0"
WBLTG102

SPAN 4 LIGHTING DETAILS

FHWA REGION	STATE	PROJECT	
5	OHIO		

105/412

CUYAHOGA COUNTY
CUY-6-14.99

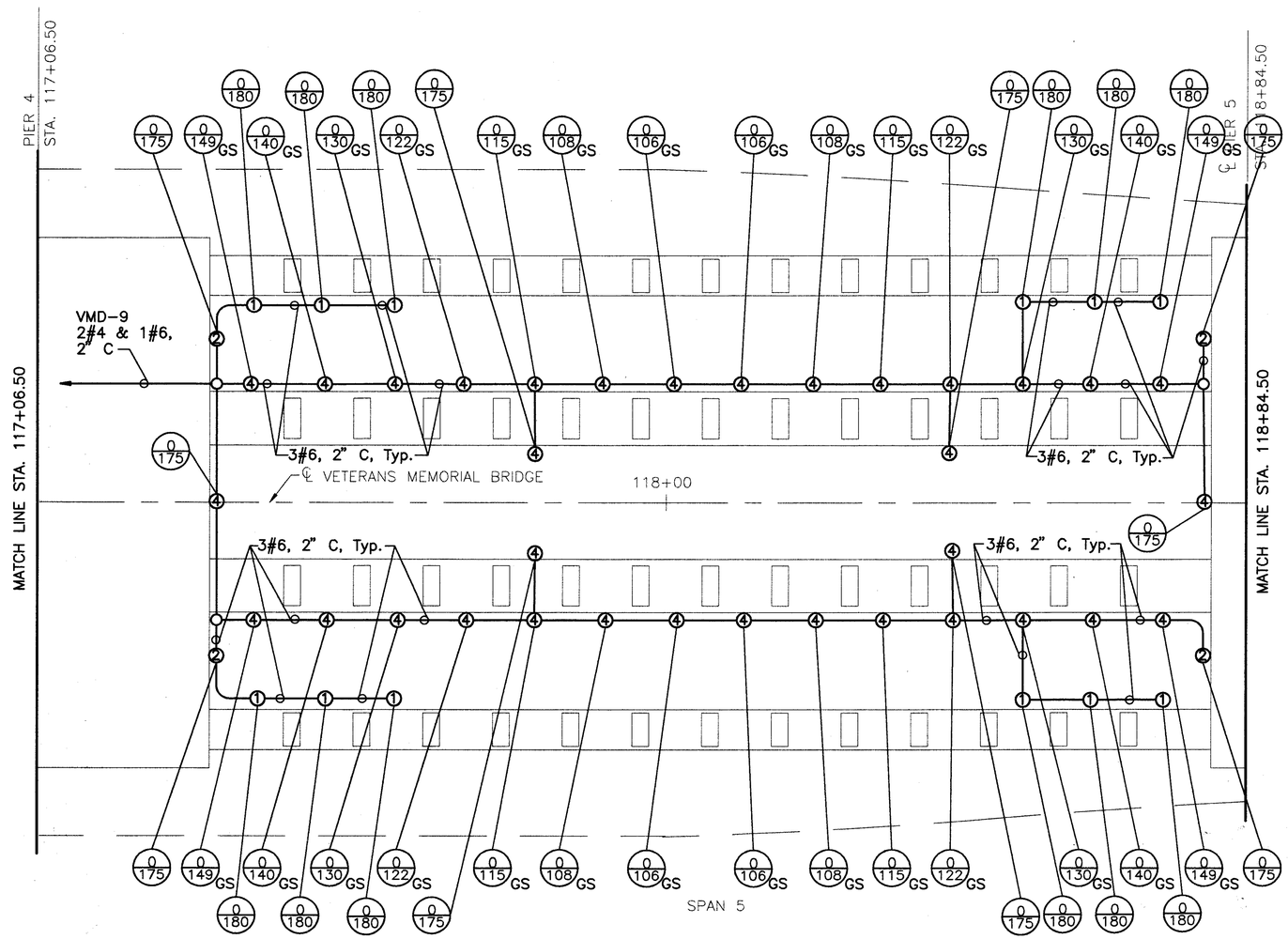

Notes:

1. Install Type ② and ④ luminaires with wire entry away from wall. See Sheet 130.
2. For Span 5 Elevation, see Sheet 112.

LEGEND

① 50W HPS-WIDE BEAM

② 250W HPS-WIDE BEAM

④ 100W HPS-WIDE BEAM

R45/125 DEGREE OF ORIENTATION; R=RIGHT, L=LEFT DEGREE OF TILT

GS GLARE SHIELD

10 0 10 20
SCALE IN FEET

HOWARD NEEDLES TAMMEN & BERGENDOFF
ARCHITECTS ENGINEERS PLANNERS HNTB

MADE BY: F.E.G. DATE: 3/22/94
DRAWN BY: P.J.K. DATE: 3/23/94
CHECKED BY: N.C.Y. DATE: /--/94
SCALE: 1"=10'

21471/MODEL 1=10'

ARCH LIGHTING PLAN-SPAN 5

FHWA REGION	STATE	PROJECT	
5	OHIO		

105R
412R

CUYAHOGA COUNTY

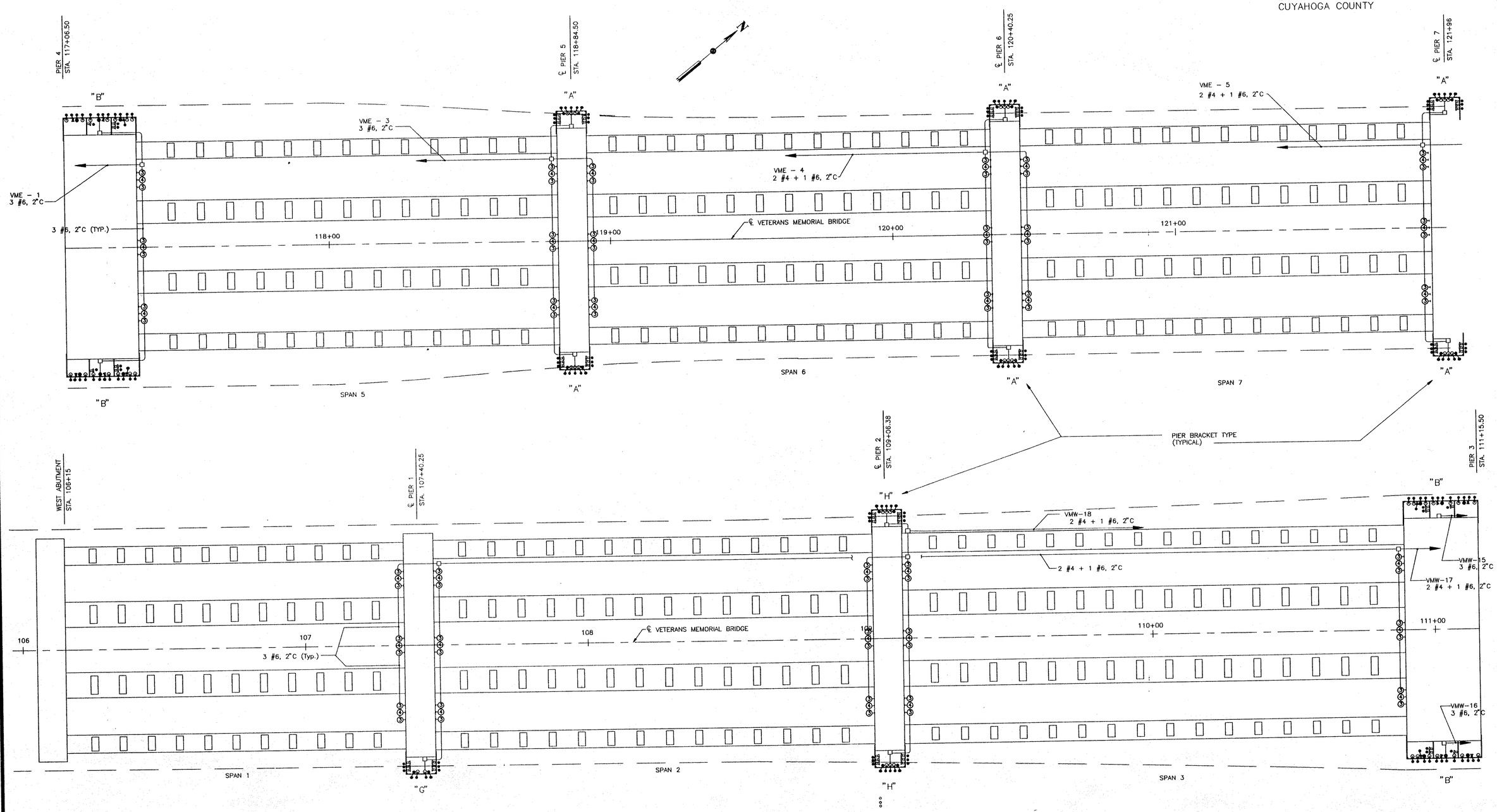

NOTES:
1.) SEE DRAWINGS 130K & 130N FOR PIER BRACKET DETAILS

HOWARD NEEDLES TAMMEN & BERGENDOFF
ARCHITECTS ENGINEERS PLANNERS HNTB

MADE BY: F.E.G. DATE: 7/17/95
DRAWN BY: V.P. DATE: 7/17/95
CHECKED BY: N.C.Y. DATE: 7/17/95
SCALE: 1/16" = 1'-0"
LTG104

F:\PROJECTS\BRIDGE\23318\VETMEM\LTG104

ARCH LIGHTING PLAN – PART A

FHWA REGION	STATE	PROJECT	
5	OHIO		

106
412

CUYAHOGA COUNTY
CUY-6-14.99

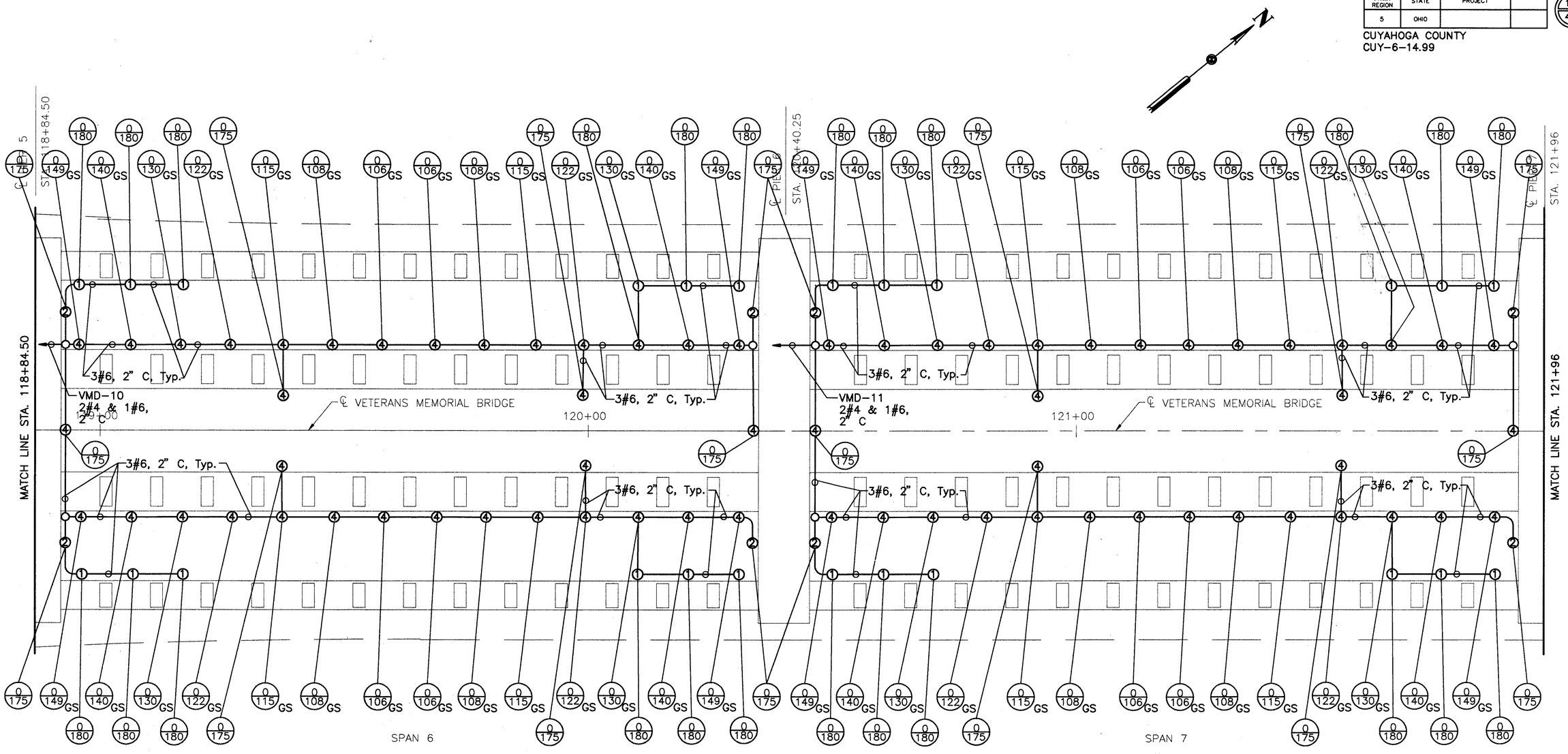

Notes:
1. Install Type ② and ④ luminaire with wire entry away from wall. See Sheet 130.
2. For Span 6 and 7 elevations, see Sheets 112 and 113.

LEGEND
① 50W HPS-WIDE BEAM
② 250W HPS-WIDE BEAM
④ 100W HPS-WIDE BEAM
R45/125 DEGREE OF ORIENTATION; R=RIGHT, L=LEFT
DEGREE OF TILT
GS GLARE SHIELD

10 0 10 20
SCALE IN FEET

HOWARD NEEDLES TAMMEN & BERGENDOFF
ARCHITECTS ENGINEERS PLANNERS
HNTB

MADE BY: F.E.G. DATE: 3/22/94
DRAWN BY: P.J.K. DATE: 3/23/94
CHECKED BY: N.C.Y. DATE: -/--/94
SCALE: 1"=10'

21471/ARCHPL 1=10'

ARCH LIGHTING PLAN-SPANS 6 & 7

FHWA REGION	STATE	PROJECT	
5	OHIO		

106R
412R

CUYAHOGA COUNTY
CUY-6-14.99

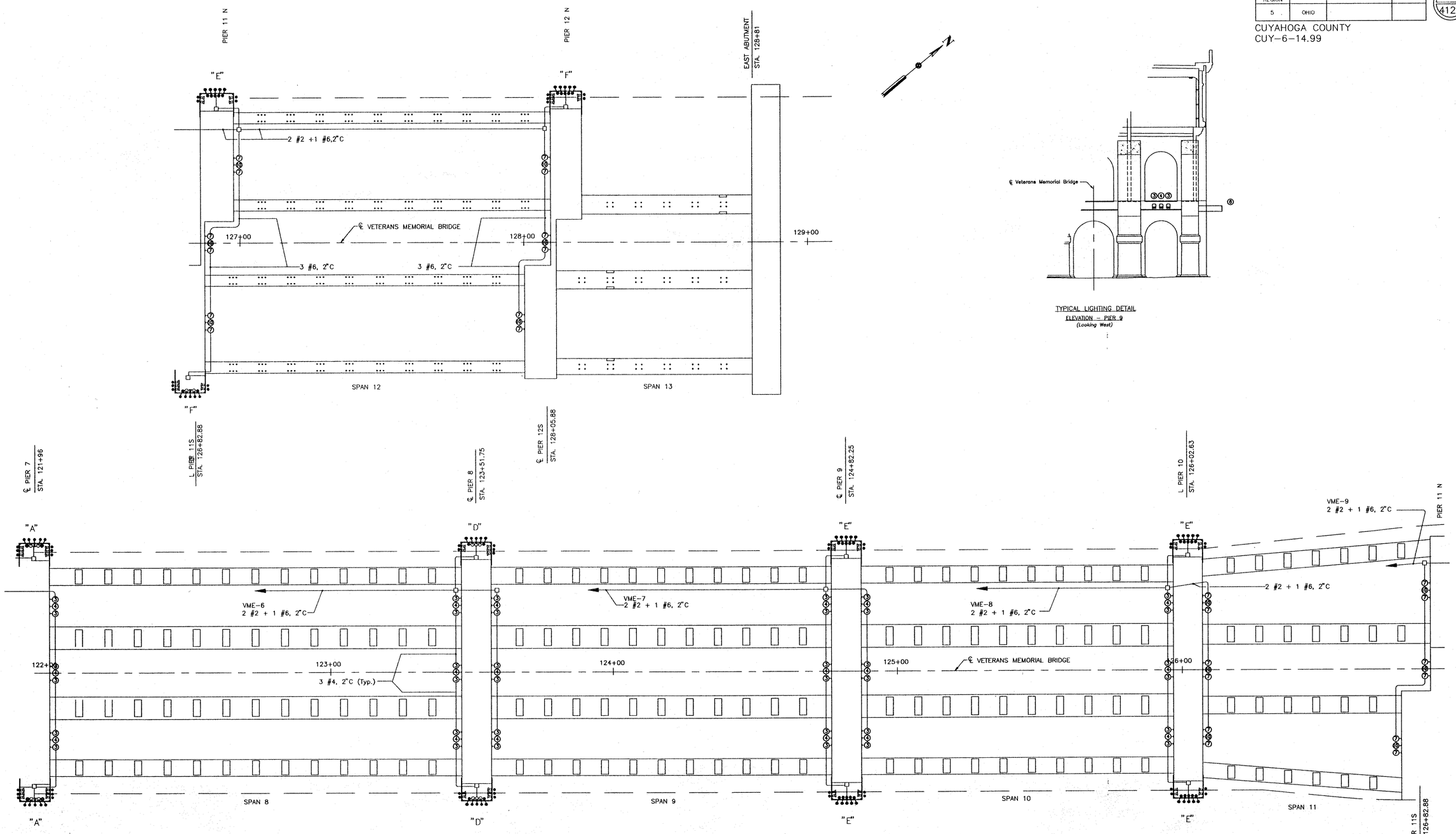

TYPICAL LIGHTING DETAIL
ELEVATION – PIER 9
(Looking West)

NOTES:
1.) SEE DRAWINGS 130K & 130N FOR PIER BRACKET DETAILS

HOWARD NEEDLES TAMMEN & BERGENDOFF
ARCHITECTS ENGINEERS PLANNERS
HNTB

MADE BY: F.E.G. DATE: 7/17/95
DRAWN BY: V.P. DATE: 7/17/95
CHECKED BY: N.C.Y. DATE: 7/17/95
SCALE: 1/16" = 1'-0"
LTG104

F:\PROJECTS\BRIDGE\23318\VETMEM\LTG104

ARCH LIGHTING PLAN – PART B

FHWA REGION	STATE	PROJECT	
5	OHIO		

107/412

CUYAHOGA COUNTY
CUY-6-14.99

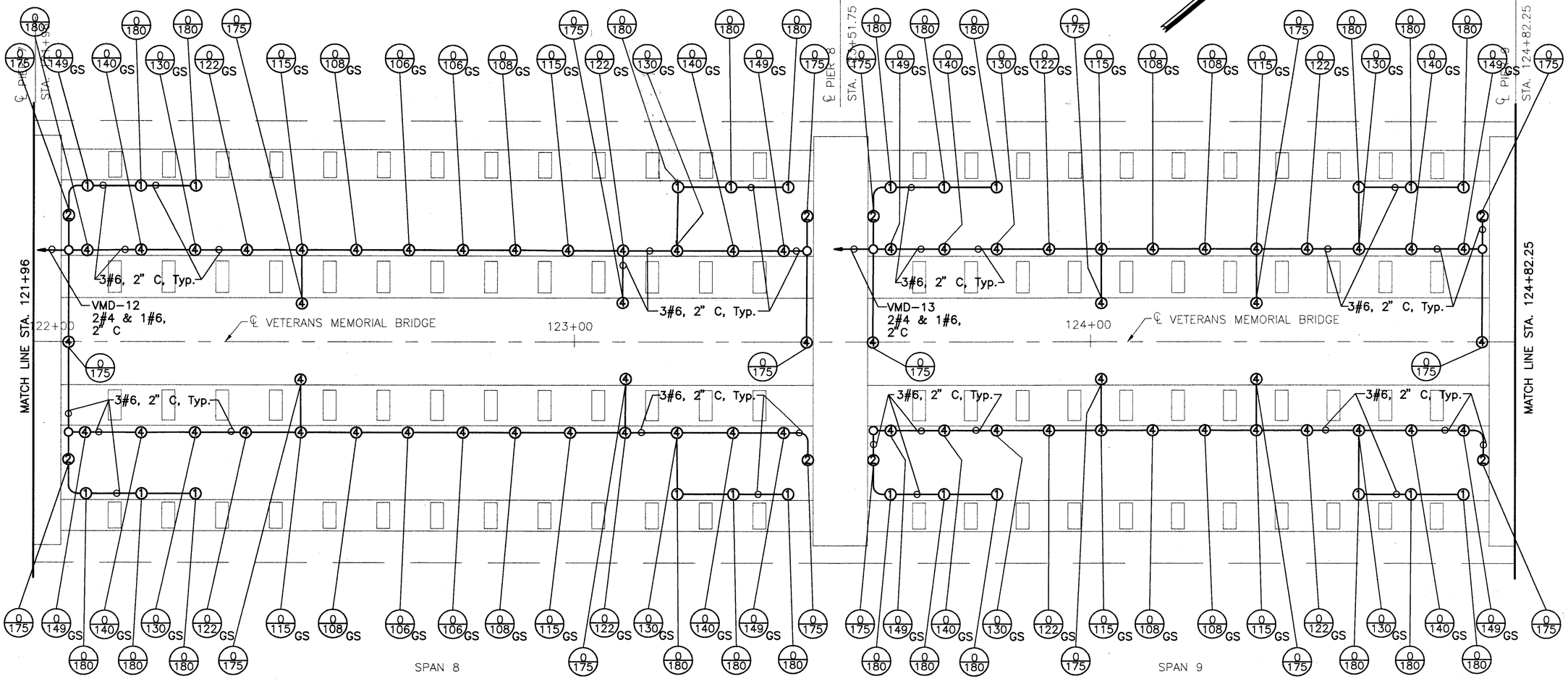

Notes:

1. Install Type ② and ④ luminaires with wire entry away from wall. See Sheet 130.
2. For Span 8 and 9 elevations, see Sheets 113 and 114.

LEGEND

① 50W HPS-WIDE BEAM

② 250W HPS-WIDE BEAM

④ 100W HPS-WIDE BEAM

R45/125 DEGREE OF ORIENTATION; R=RIGHT, L=LEFT
DEGREE OF TILT

GS GLARE SHIELD

10 0 10 20
SCALE IN FEET

HOWARD NEEDLES TAMMEN & BERGENDOFF
ARCHITECTS ENGINEERS PLANNERS HNTB

MADE BY: F.E.G. DATE: 3/22/94
DRAWN BY: P.J.K. DATE: 3/23/94
CHECKED BY: N.C.Y. DATE: --/--/94
SCALE: 1"=10'

21471/ARCHPL 1=10'

ARCH LIGHTING PLAN-SPANS 8 & 9

FHWA REGION	STATE	PROJECT	
5	OHIO		

108
412

CUYAHOGA COUNTY
CUY-6-14.99

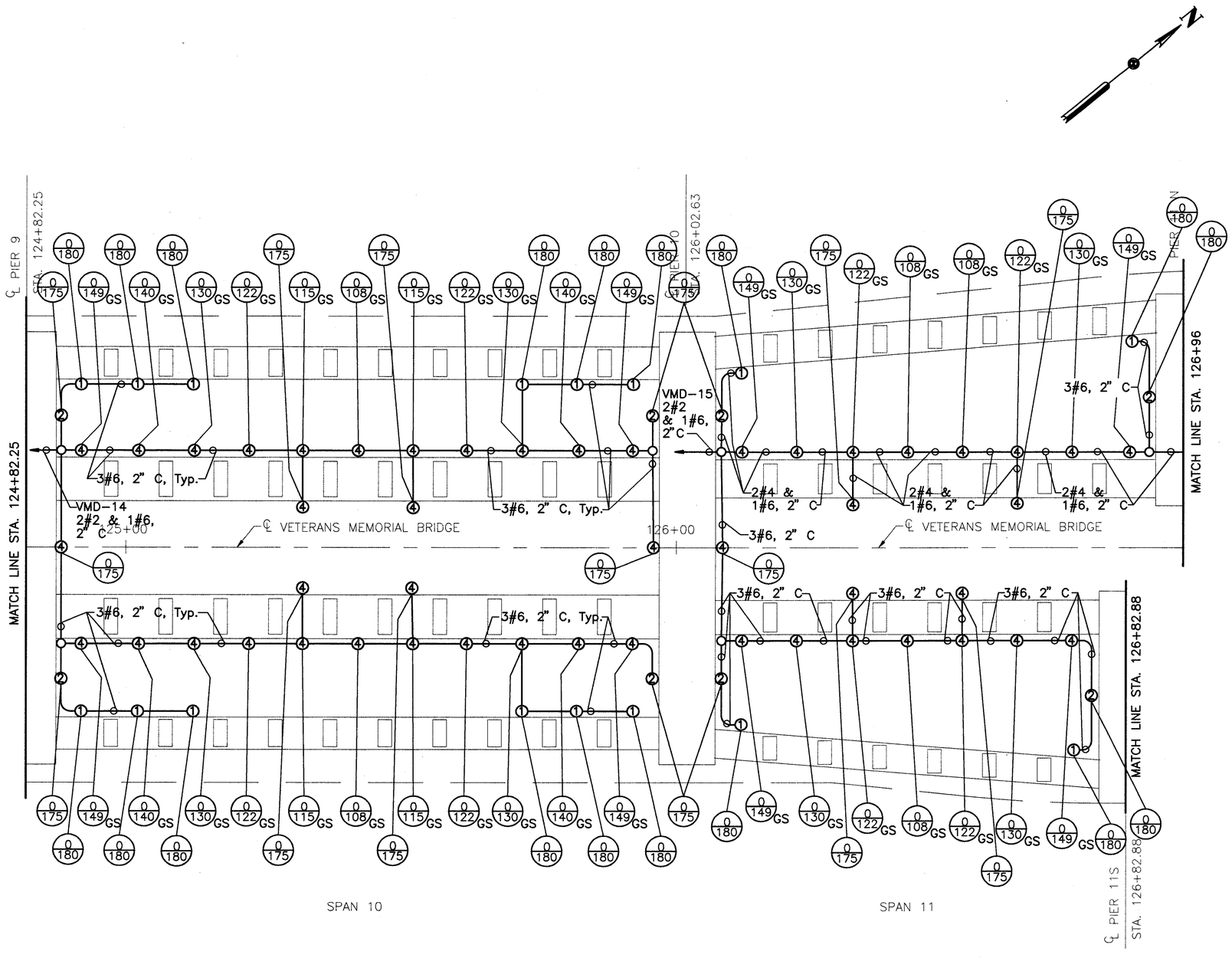

Notes:
1. Install Type ② and ④ luminaires with wire entry away from wall. See Sheet 130.
2. For Span 10 and 11 elevations, see Sheets 114 and 115.

LEGEND

① 50W HPS-WIDE BEAM

② 250W HPS-WIDE BEAM

④ 100W HPS-WIDE BEAM

R45/125 DEGREE OF ORIENTATION; R=RIGHT, L=LEFT
DEGREE OF TILT

GS GLARE SHIELD

10 0 10 20
SCALE IN FEET

HOWARD NEEDLES TAMMEN & BERGENDOFF
ARCHITECTS ENGINEERS PLANNERS HNTB

MADE BY: F.E.G. DATE: 3/22/94
DRAWN BY: P.J.K. DATE: 3/23/94
CHECKED BY: N.C.Y. DATE: -/--/94
SCALE: 1"=10'

21471/ARCHPL 1=10'

ARCH LIGHTING PLAN-SPANS 10 & 11

FHWA REGION	STATE	PROJECT	
5	OHIO		

109
412

CUYAHOGA COUNTY
CUY-6-14.99

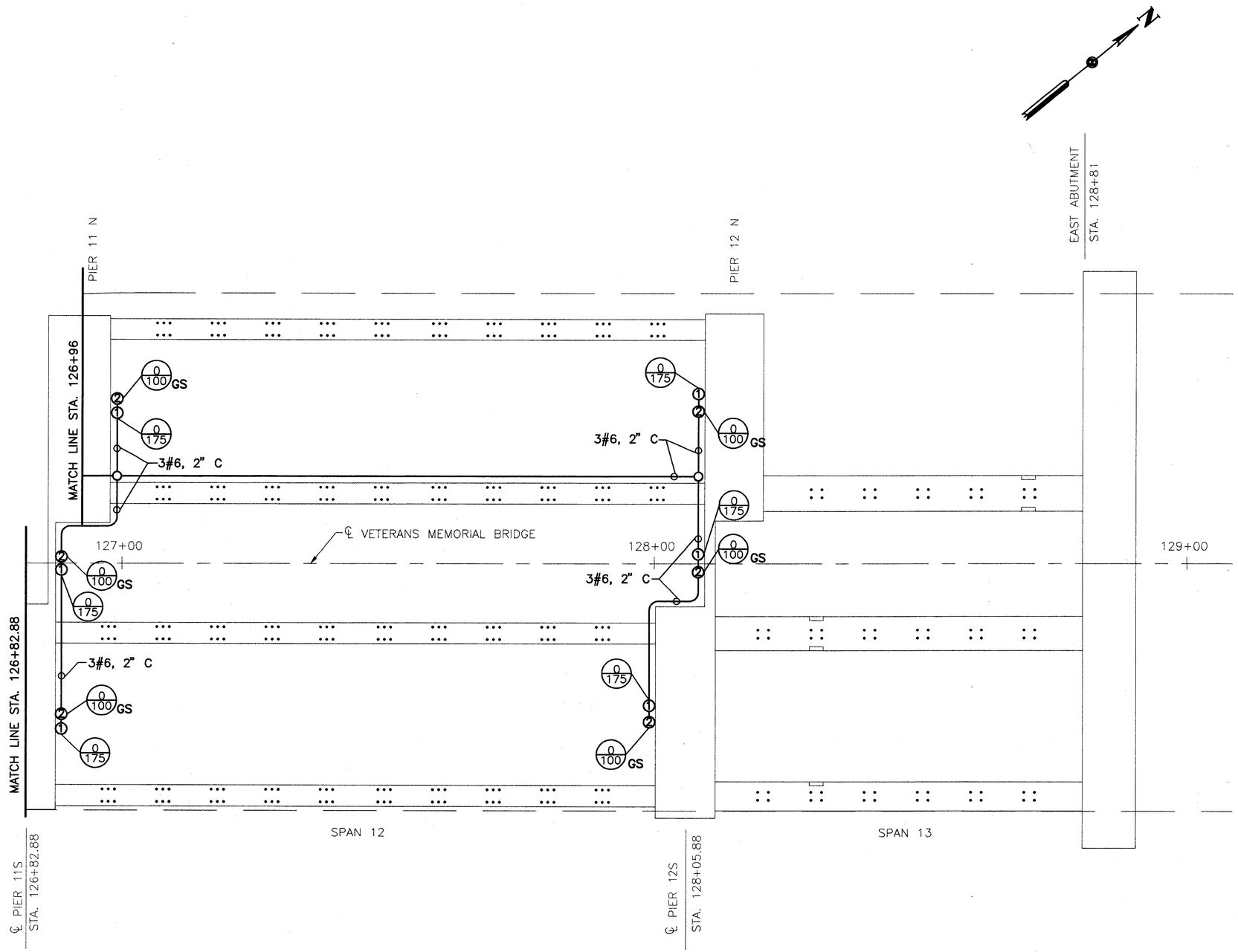

LEGEND

① 50W HPS-WIDE BEAM

② 250W HPS-SPOT

④ 100W HPS-WIDE BEAM

R45/125 DEGREE OF ORIENTATION; R=RIGHT, L=LEFT
DEGREE OF TILT

GS GLARE SHIELD

10 0 10 20
SCALE IN FEET

HOWARD NEEDLES TAMMEN & BERGENDOFF
ARCHITECTS ENGINEERS PLANNERS HNTB

MADE BY: F.E.G. DATE: 3/22/94
DRAWN BY: P.J.K. DATE: 3/23/94
CHECKED BY: N.C.Y. DATE: -/--/94
SCALE: 1"=10'

21471/ARCHPL 1=10'

ARCH LIGHTING PLAN-SPANS 12 & 13

FHWA REGION	STATE	PROJECT	
5	OHIO		

110/412

CUYAHOGA COUNTY
CUY-6-14.99

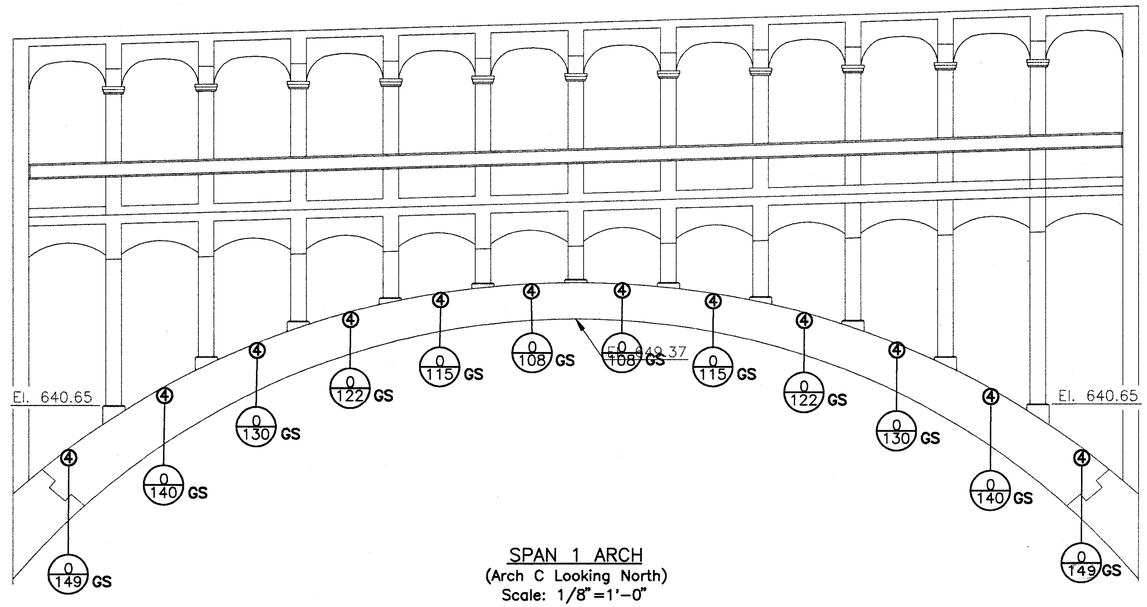

SPAN 1 ARCH
(Arch C Looking North)
Scale: 1/8"=1'-0"

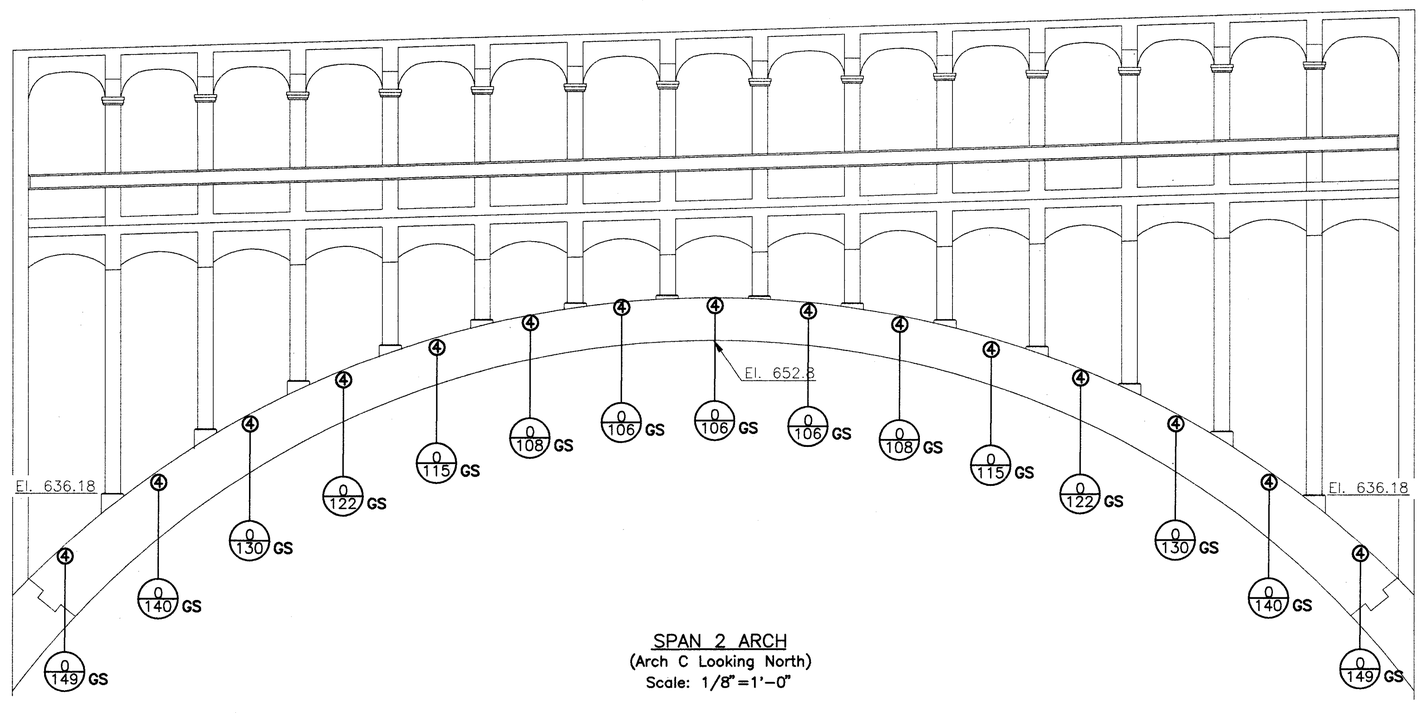

SPAN 2 ARCH
(Arch C Looking North)
Scale: 1/8"=1'-0"

LEGEND

① 50W HPS

② 250W HPS

④ 100W HPS

R45/125 DEGREE OF ORIENTATION / DEGREE OF TILT

GS GLARE SHIELD

HOWARD NEEDLES TAMMEN & BERGENDOFF
ARCHITECTS ENGINEERS PLANNERS
HNTB

MADE BY: F.E.G. DATE: 2/21/94
DRAWN BY: P.J.K. DATE: 2/23/94
CHECKED BY: N.C.V. DATE:
SCALE: 1/8"=1'-0"

21471/SPAN1-2 1=1

ARCH LIGHTING ELEVATIONS-SPANS 1 & 2

FHWA REGION	STATE	PROJECT	
5	OHIO		

111/412

CUYAHOGA COUNTY
CUY-6-14.99

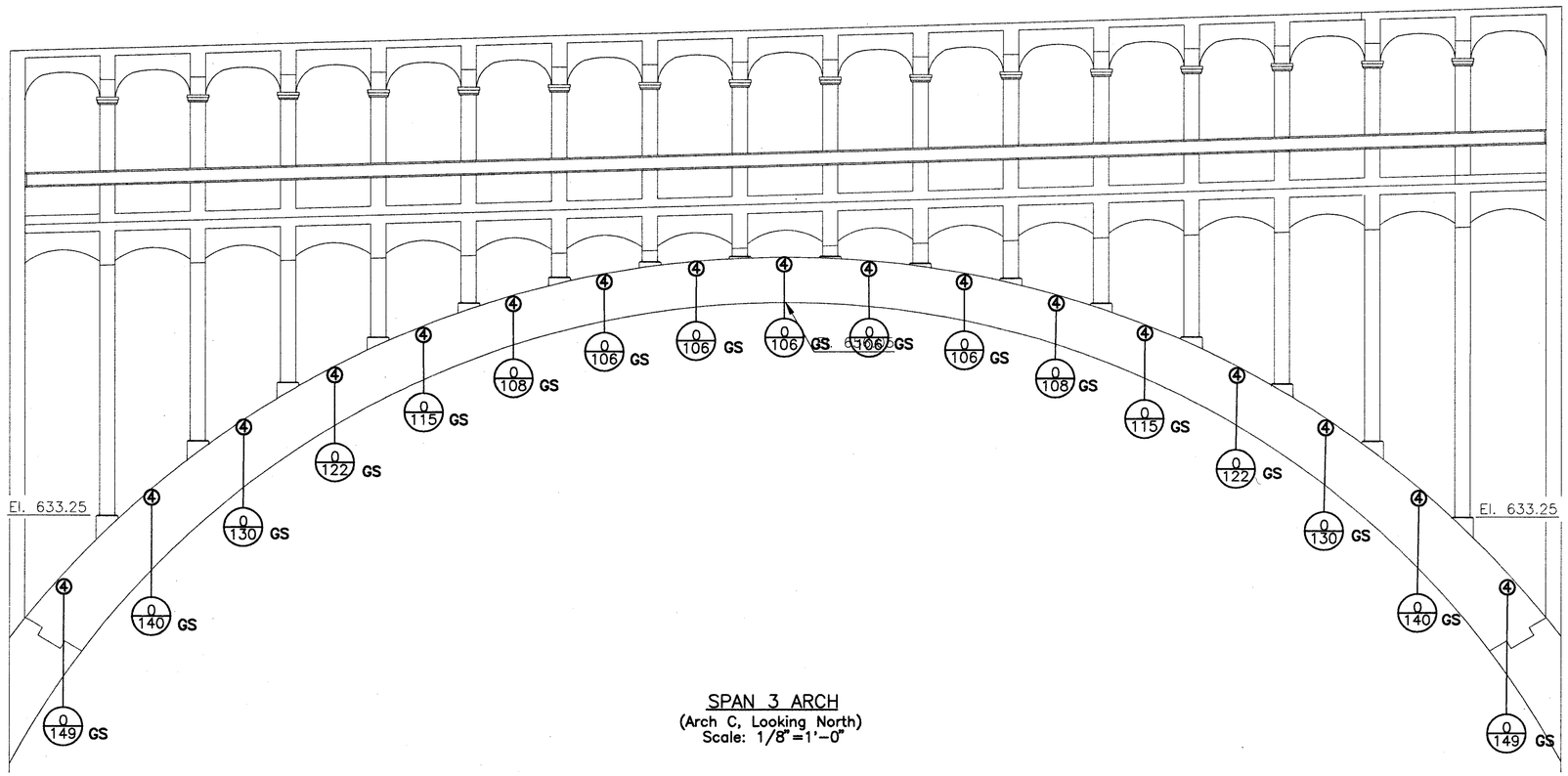

SPAN 3 ARCH
(Arch C, Looking North)
Scale: 1/8"=1'-0"

LEGEND

① 50W HPS

② 250W HPS

④ 100W HPS

R45/125 DEGREE OF ORIENTATION / DEGREE OF TILT

GS GLARE SHIELD

HOWARD NEEDLES TAMMEN & BERGENDOFF
ARCHITECTS ENGINEERS PLANNERS HNTB

MADE BY: F.E.G. DATE: 2/21/94
DRAWN BY: P.J.K. DATE: 2/23/94
CHECKED BY: N.C.Y. DATE:
SCALE: 1/8"=1'-0"

21471/SPAN3 1=1

ARCH LIGHTING ELEVATION-SPAN3

FHWA REGION	STATE	PROJECT	
5	OHIO		

112/412

CUYAHOGA COUNTY
CUY-6-14.99

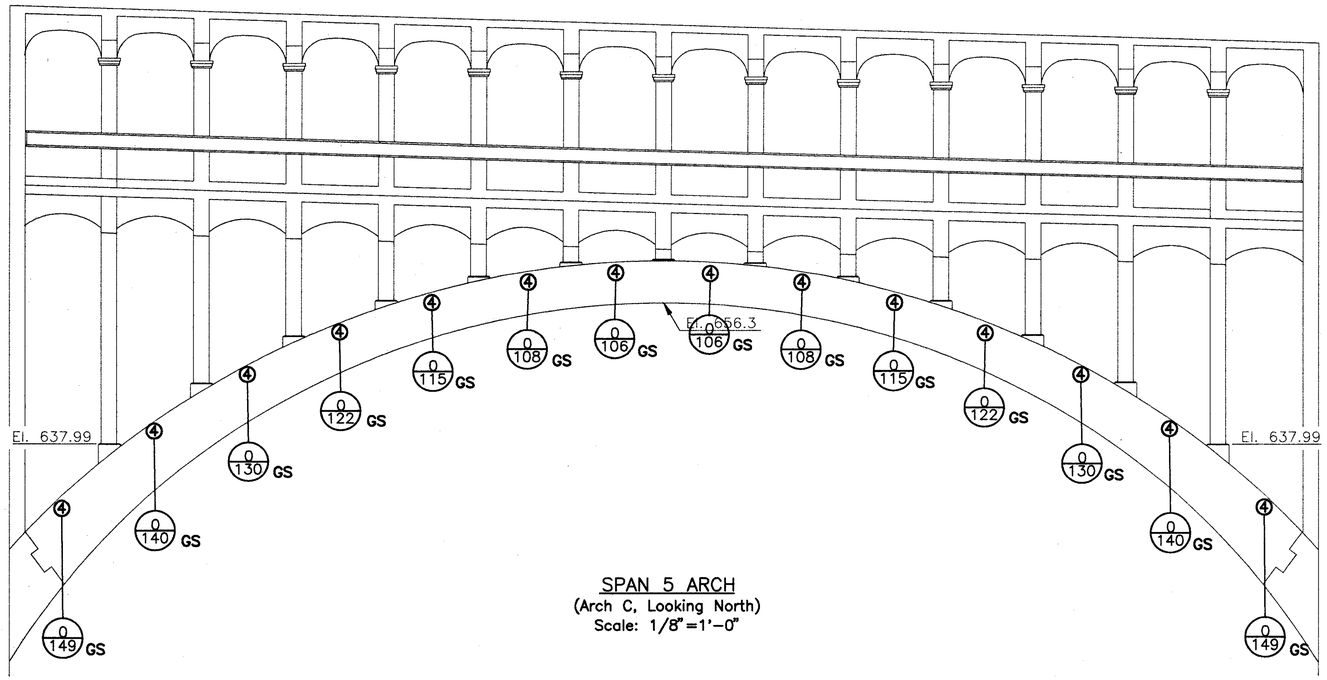

SPAN 5 ARCH
(Arch C, Looking North)
Scale: 1/8"=1'-0"

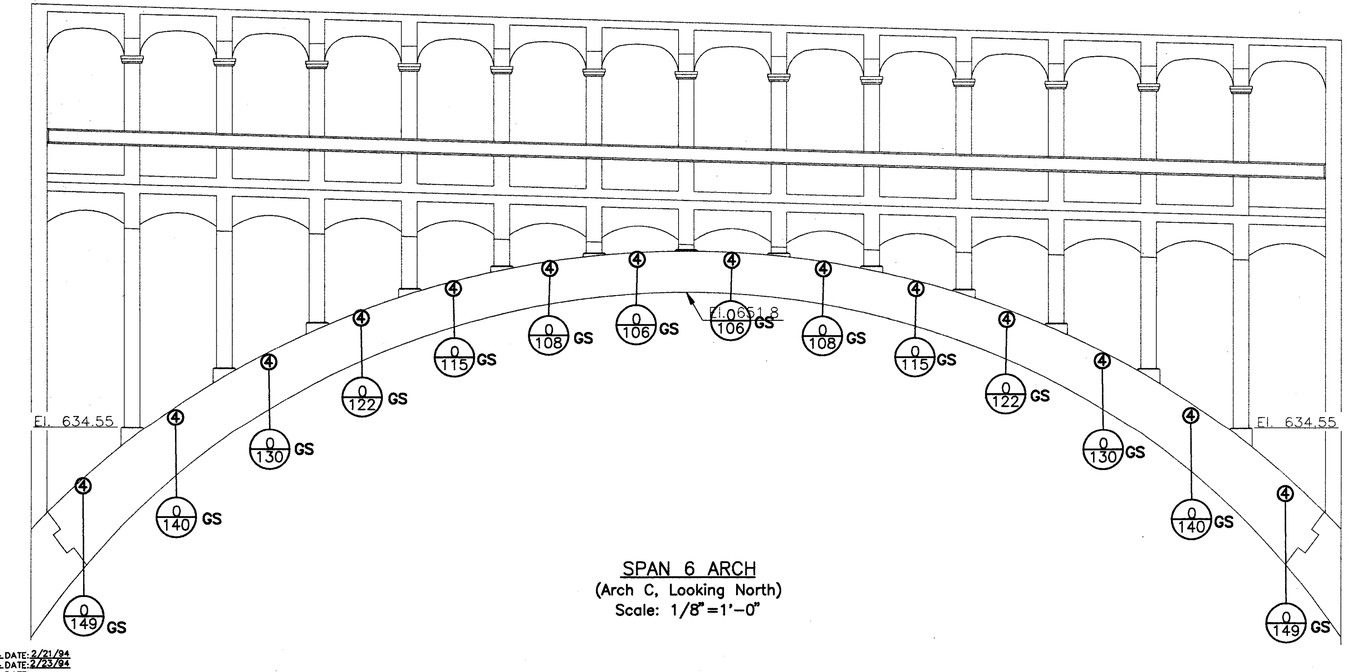

SPAN 6 ARCH
(Arch C, Looking North)
Scale: 1/8"=1'-0"

LEGEND

①	50W HPS
②	250W HPS
④	100W HPS
R45/125	DEGREE OF ORIENTATION / DEGREE OF TILT
GS	GLARE SHIELD

HOWARD NEEDLES TAMMEN & BERGENDOFF
ARCHITECTS ENGINEERS PLANNERS
HNTB

MADE BY: F.E.G. DATE: 2/21/94
DRAWN BY: P.J.K. DATE: 2/23/94
CHECKED BY: N.C.Y. DATE:
SCALE: 1/8"=1'-0"

2167/SPNS-4 1=1

ARCH LIGHTING ELEVATIONS-SPANS 5 & 6

FHWA REGION	STATE	PROJECT	
5	OHIO		

113/412

CUYAHOGA COUNTY
CUY-6-14.99

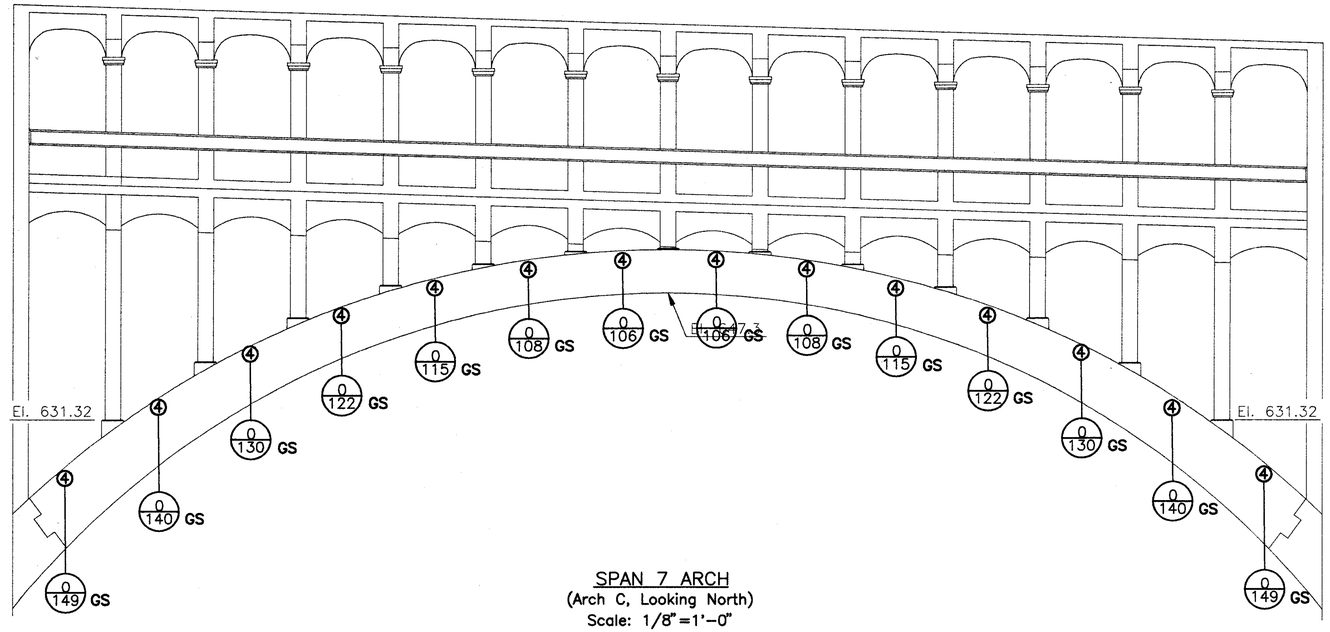

SPAN 7 ARCH
(Arch C, Looking North)
Scale: 1/8"=1'-0"

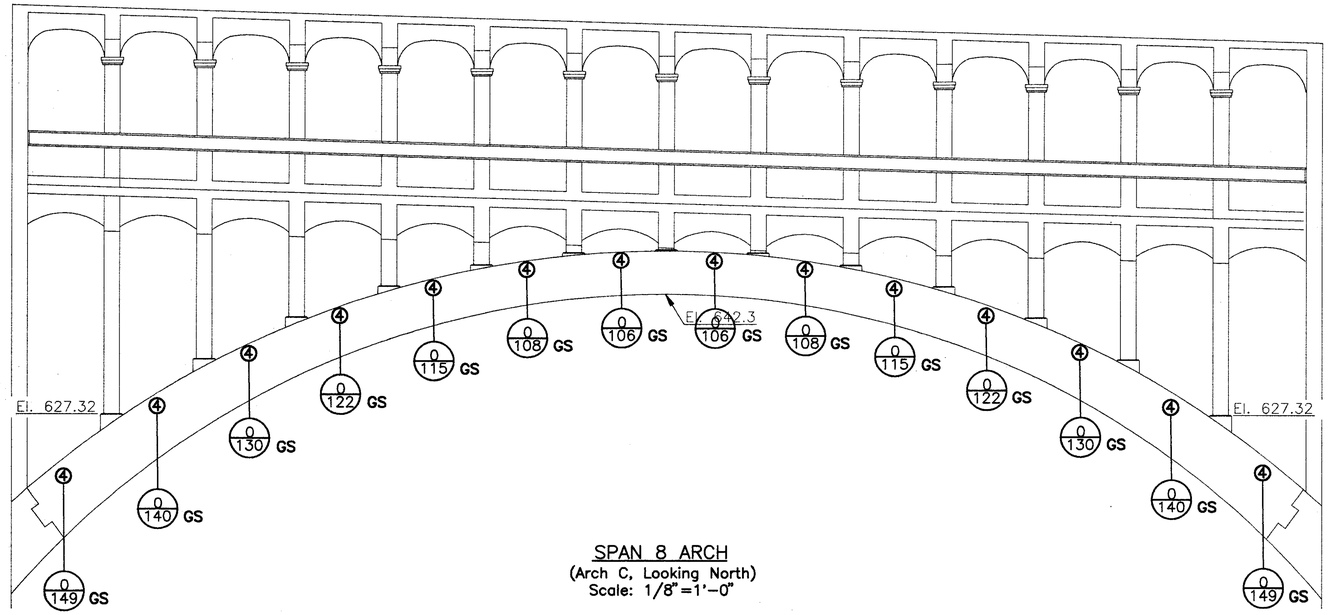

SPAN 8 ARCH
(Arch C, Looking North)
Scale: 1/8"=1'-0"

LEGEND

① 50W HPS

② 250W HPS

④ 100W HPS

R45/125 DEGREE OF ORIENTATION / DEGREE OF TILT

GS GLARE SHIELD

HOWARD NEEDLES TAMMEN & BERGENDOFF HNTB
ARCHITECTS ENGINEERS PLANNERS

MADE BY: F.E.G. DATE: 2/21/94
DRAWN BY: P.J.K. DATE: 2/23/94
CHECKED BY: N.C.Y. DATE:
SCALE: 1/8"=1'-0"

21471/SPAN7-8 1=1

ARCH LIGHTING ELEVATIONS-SPANS 7 & 8

FHWA REGION	STATE	PROJECT	
5	OHIO		

114/412

CUYAHOGA COUNTY
CUY-6-14.99

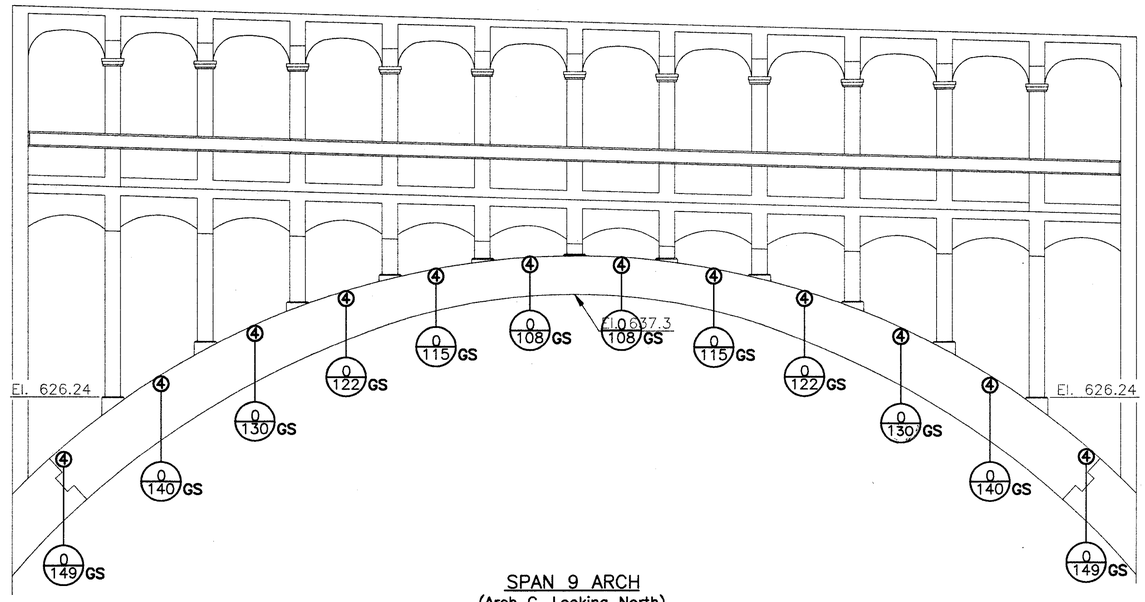

SPAN 9 ARCH
(Arch C, Looking North)
Scale: 1/8"=1'-0"

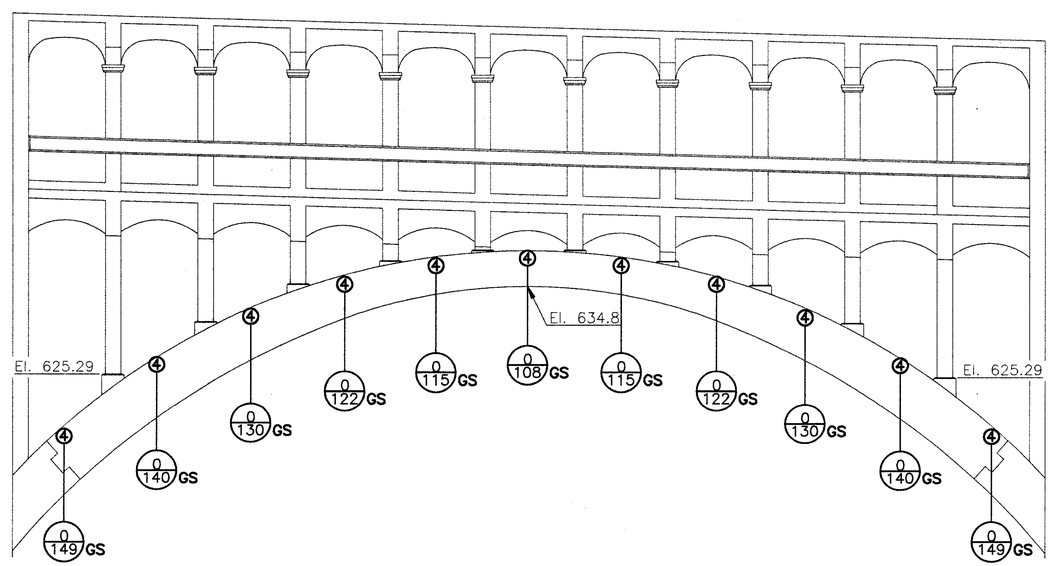

SPAN 10 ARCH
(Arch C, Looking North)
Scale: 1/8"=1'-0"

LEGEND

① 50W HPS

② 250W HPS

④ 100W HPS

R45/125 DEGREE OF ORIENTATION / DEGREE OF TILT

GS GLARE SHIELD

HOWARD NEEDLES TAMMEN & BERGENDOFF
ARCHITECTS ENGINEERS PLANNERS HNTB

MADE BY: F.E.G. DATE: 2/21/94
DRAWN BY: P.J.K. DATE: 2/23/94
CHECKED BY: N.C.Y. DATE:
SCALE: 1/8"=1'-0"

21471/SPAN9-10 1=1

ARCH LIGHTING ELEVATION-SPANS 9 & 10

FHWA REGION	STATE	PROJECT	
5	OHIO		

115/412

CUYAHOGA COUNTY
CUY-6-14.99

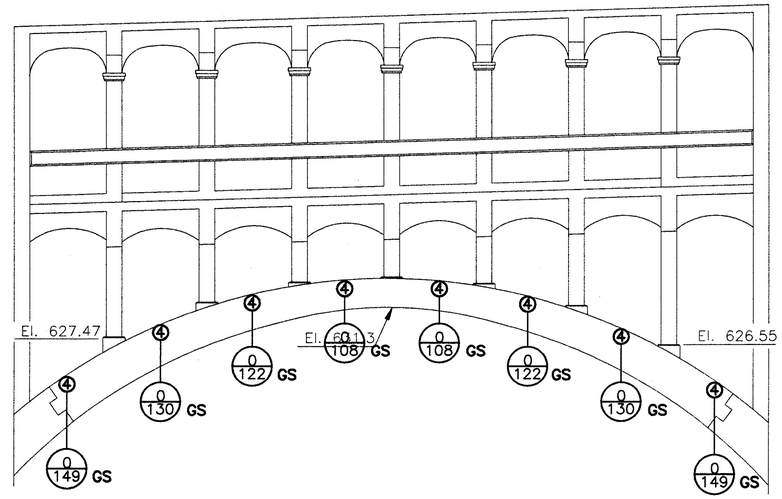

SPAN 11 ARCH-RIB B
(Looking South)
Scale: 1/8"=1'-0"

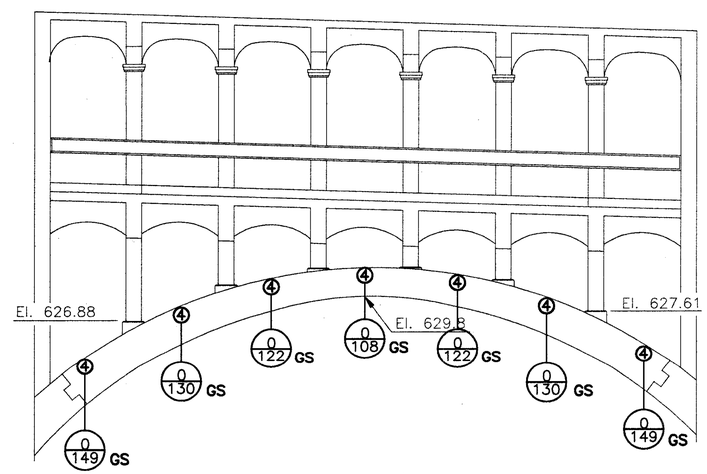

SPAN 11 ARCH-RIB C
(Looking North)
Scale: 1/8"=1'-0"

LEGEND

①	50W HPS
②	250W HPS
④	100W HPS
R45/125	DEGREE OF ORIENTATION / DEGREE OF TILT
GS	GLARE SHIELD

HOWARD NEEDLES TAMMEN & BERGENDOFF
ARCHITECTS ENGINEERS PLANNERS
HNTB

MADE BY: F.E.G. DATE: 2/21/94
DRAWN BY: P.J.K. DATE: 2/23/94
CHECKED BY: N.G.Y. DATE:
SCALE: 1/8"=1'-0"

21471/SPAN11 1=1

ARCH LIGHTING ELEVATION-SPAN 11

FHWA REGION	STATE	PROJECT	
5	OHIO		

116
412

CUYAHOGA COUNTY
CUY-6-14.99

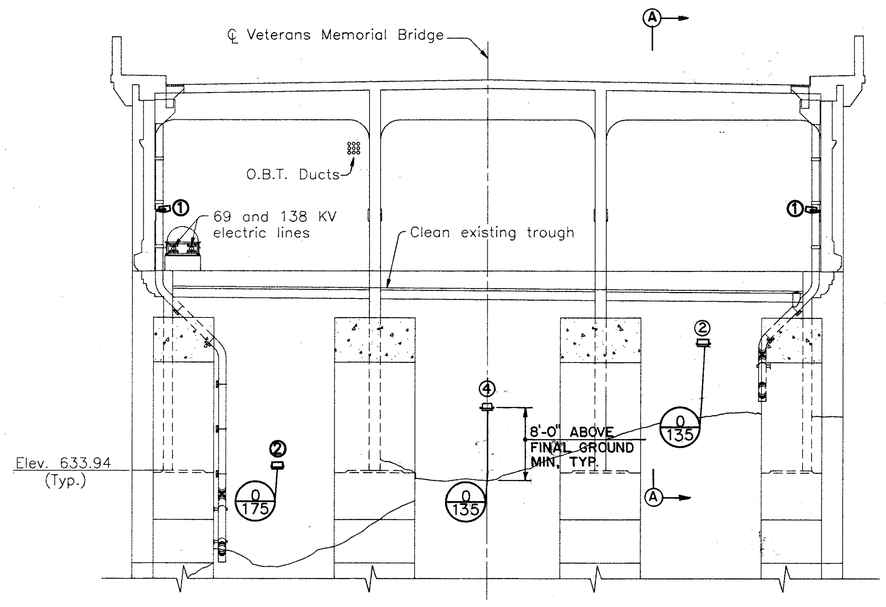

ELEVATION – WEST ABUTMENT
(Looking west)
(Lower Deck, Columns and Floorbeam 1,1 not shown)
Scale: 1/8" = 1'-0"

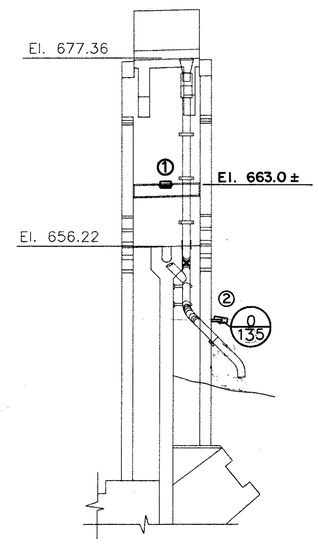

SECTION A–A
(North Bay)
(Railing not shown)
Scale: 1/8" = 1'-0"

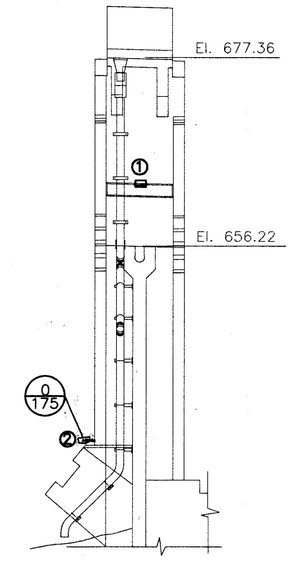

SECTION A–A
(South Bay)
(Railing not shown)
Scale: 1/8" = 1'-0"

Notes:
1. See Sheets 129 and 130 for mounting details.
2. For conduit, see Arch Lighting Plan Sheet 102.

HOWARD NEEDLES TAMMEN & BERGENDOFF
ARCHITECTS ENGINEERS PLANNERS HNTB

MADE BY: F.E.G. DATE: 2/21/94
DRAWN BY: P.J.K. DATE: 2/23/94
CHECKED BY: N.G.Y. DATE:
SCALE: 1/8" = 1'-0"

21471/WEST-AB 1=1

WEST ABUTMENT LIGHTING ELEVATIONS

FHWA REGION	STATE	PROJECT	
5	OHIO		

117/412

CUYAHOGA COUNTY
CUY-6-14.99

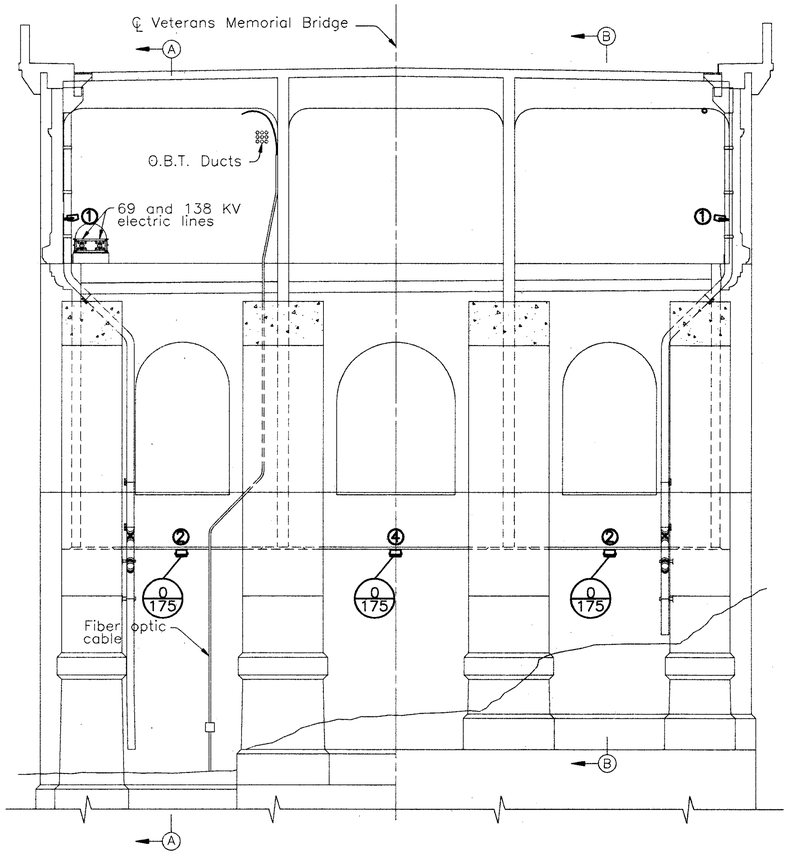

ELEVATION – PIER 1
(Looking West)
(Lower Deck, Columns and Floorbeam 2,1 not shown)
Scale: 1/8"=1'-0"

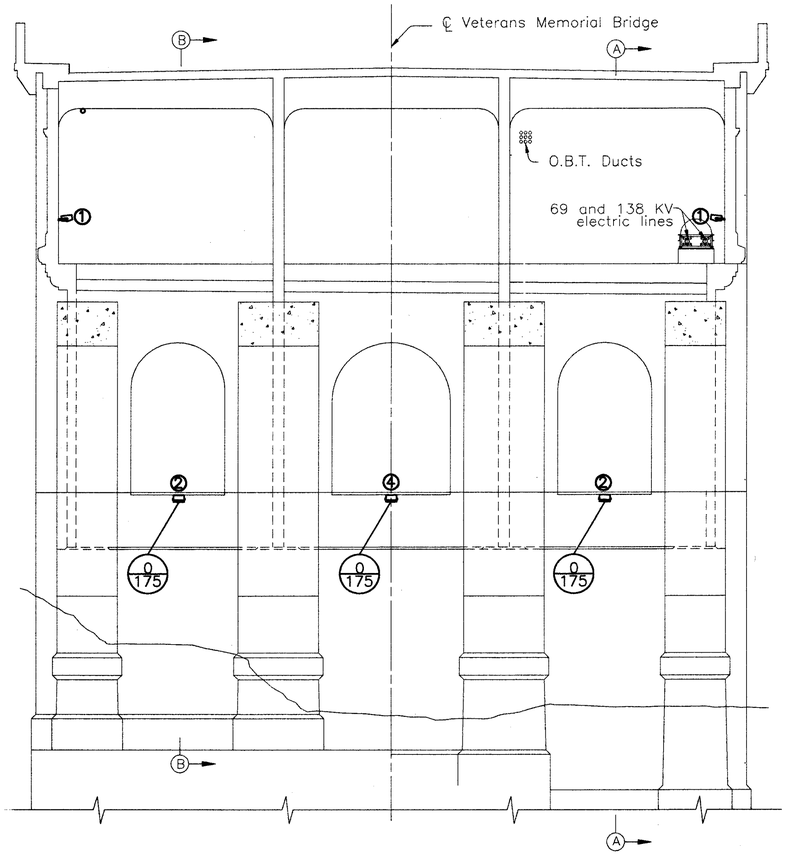

ELEVATION – PIER 1
(Looking East)
(Lower Deck, Columns and Floorbeam 2,1 not shown)
Scale: 1/8"=1'-0"

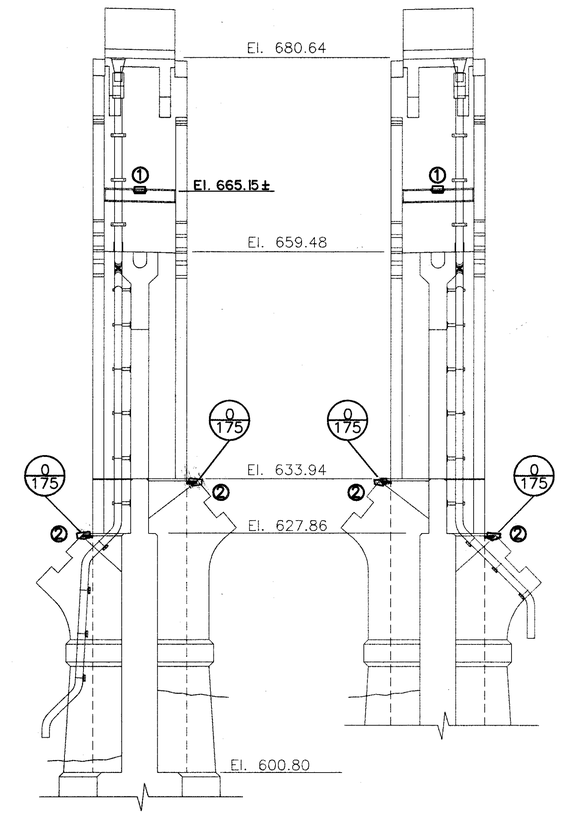

SECTION A–A
(Railing not shown)
Scale: 1/8"=1'-0"

SECTION B–B
(Railing not shown)
Scale: 1/8"=1'-0"

NOTES:

1. At piers with drains, mount fixtures an additional 10" out from wall.
2. Install Type ② and ④ luminaires with wire entry away from wall. See Sheet 130.
3. For conduit, see Arch Lighting Plan Sheet 102.

HOWARD NEEDLES TAMMEN & BERGENDOFF
ARCHITECTS ENGINEERS PLANNERS HNTB

MADE BY: F.E.G. DATE: 2/21/94
DRAWN BY: P.J.K. DATE: 2/23/94
CHECKED BY: N.C.Y. DATE:
SCALE: 1/8"=1'-0"

21471/PIER1 1=1

PIER 1 LIGHTING ELEVATIONS

FHWA REGION	STATE	PROJECT	
5	OHIO		

117R
412R

CUYAHOGA COUNTY
CUY-6-14.99

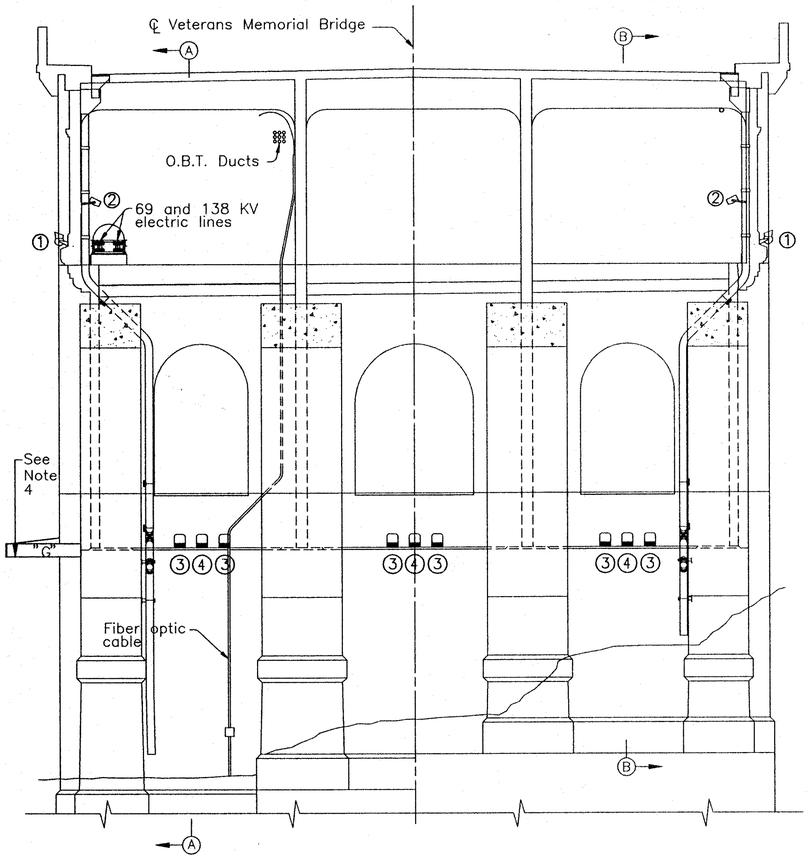

ELEVATION – PIER 1
(Looking West)
(Lower Deck, Columns and Floorbeam 2,1 not shown)
Scale: 1/8"=1'-0"

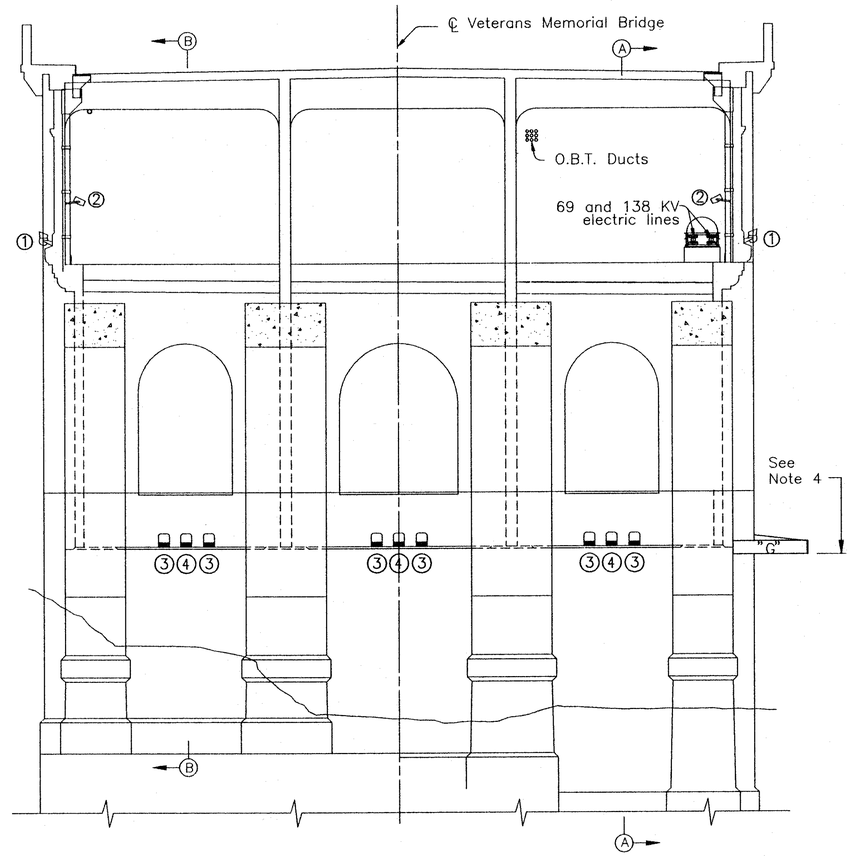

ELEVATION – PIER 1
(Looking East)
(Lower Deck, Columns and Floorbeam 2,1 not shown)
Scale: 1/8"=1'-0"

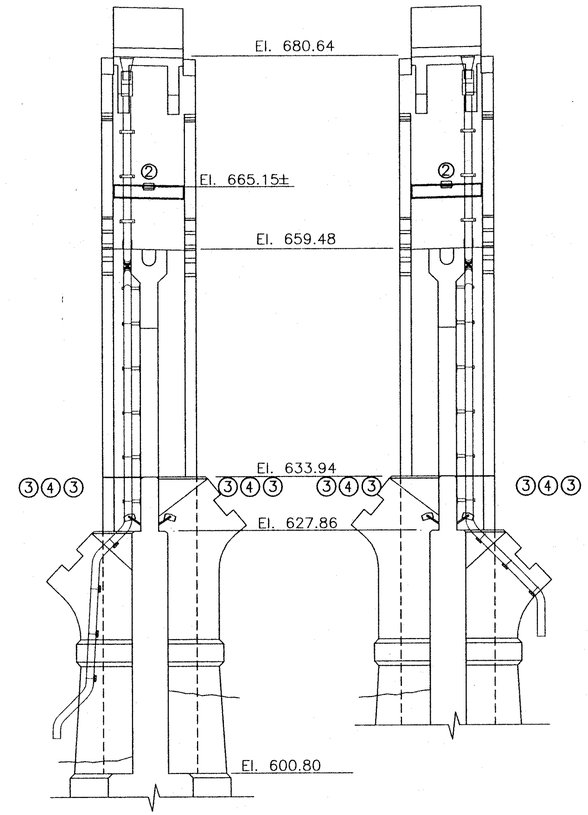

SECTION A–A
(Railing not shown)
Scale: 1/8"=1'-0"

SECTION B–B
(Railing not shown)
Scale: 1/8"=1'-0"

Notes:
1. For conduit, see Arch Lighting Plan Sheet 105R and 106R.
2. At piers with drains, mount fixtures an additional 10" out from wall.
3. See pier mounting bracket details on drawing 130K.
4. Mount bottom of bracket at El. 626.9

HOWARD NEEDLES TAMMEN & BERGENDOFF
ARCHITECTS ENGINEERS PLANNERS
HNTB

MADE BY: F.E.G. DATE: 7/17/95
DRAWN BY: L.M.L. DATE: 7/17/95
CHECKED BY: N.C.Y. DATE: 7/17/95
SCALE: 1/8"=1'-0"

2147/PIER1 1=1

PIER 1 LIGHTING ELEVATIONS

FHWA REGION	STATE	PROJECT	
5	OHIO		

118/412

CUYAHOGA COUNTY
CUY-6-14.99

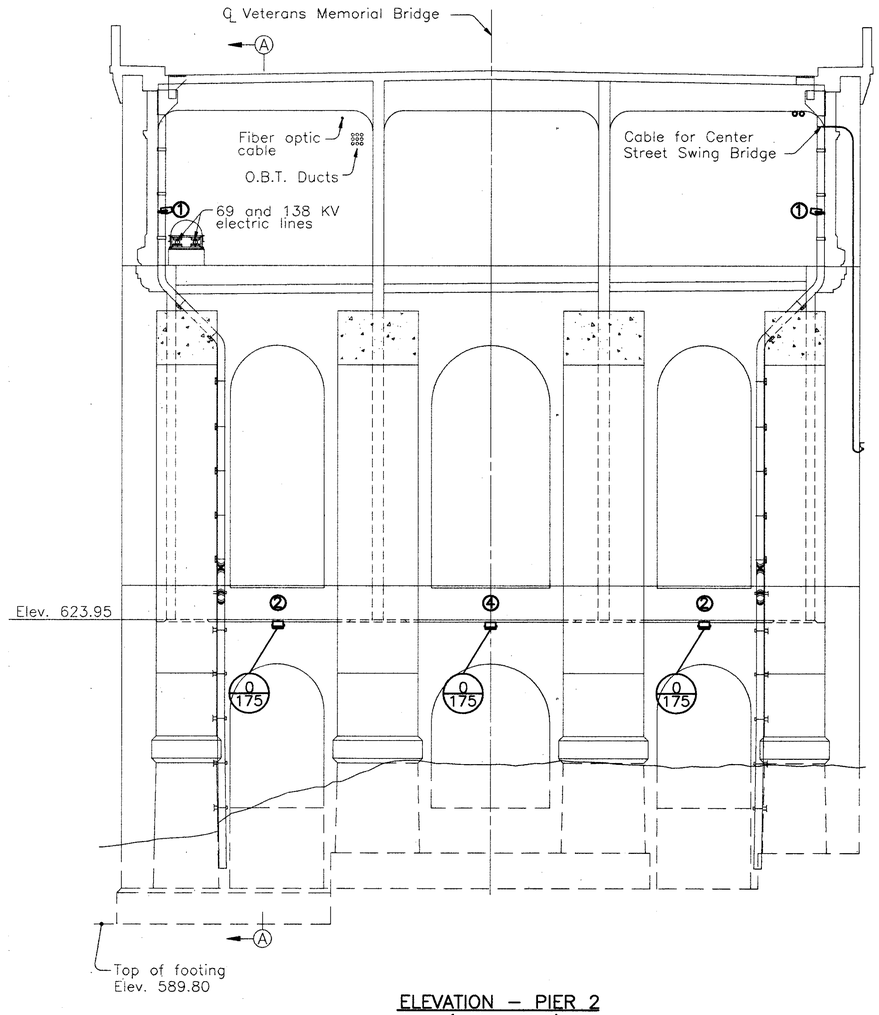

ELEVATION – PIER 2
(Looking West)
(Lower Deck, Columns and Floorbeam 3,1 not shown)
Scale: 1/8"=1'-0"

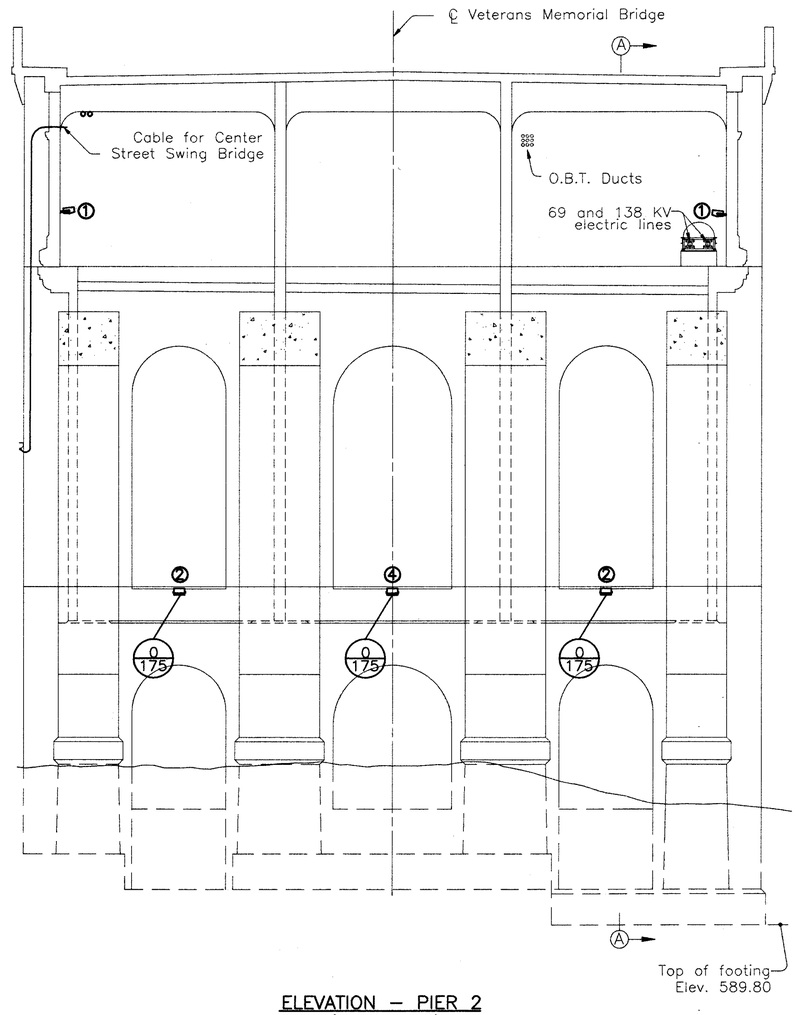

ELEVATION – PIER 2
(Looking East)
(Lower Deck, Columns and Floorbeam 3,1 not shown)
Scale: 1/8"=1'-0"

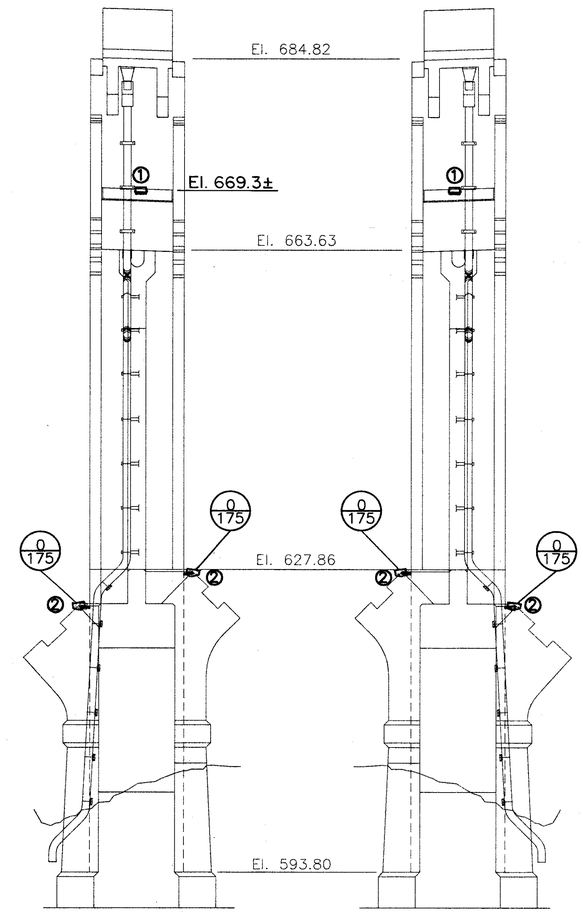

SECTION A–A
(South Bay)
Scale: 1/8"=1'-0"

SECTION A–A
(North Bay)
Scale: 1/8"=1'-0"

NOTES:

1. At piers with drains, mount fixtures an additional 10" out from wall.
2. Install Type ② and ④ luminaires with wire entry away from wall. See Sheet 130.

   For conduit, see Arch Lighting Plan Sheet 102 and 103.

HOWARD NEEDLES TAMMEN & BERGENDOFF
ARCHITECTS ENGINEERS PLANNERS
HNTB

MADE BY: F.E.G. DATE: 2/21/94
DRAWN BY: P.J.K. DATE: 2/23/94
CHECKED BY: R.C.Y. DATE:
SCALE: 1/8"=1'-0"

21471/PE02 1=1

PIER 2 LIGHTING ELEVATIONS

FHWA REGION	STATE	PROJECT	
5	OHIO		

118R
412R

CUYAHOGA COUNTY
CUY-6-14.99

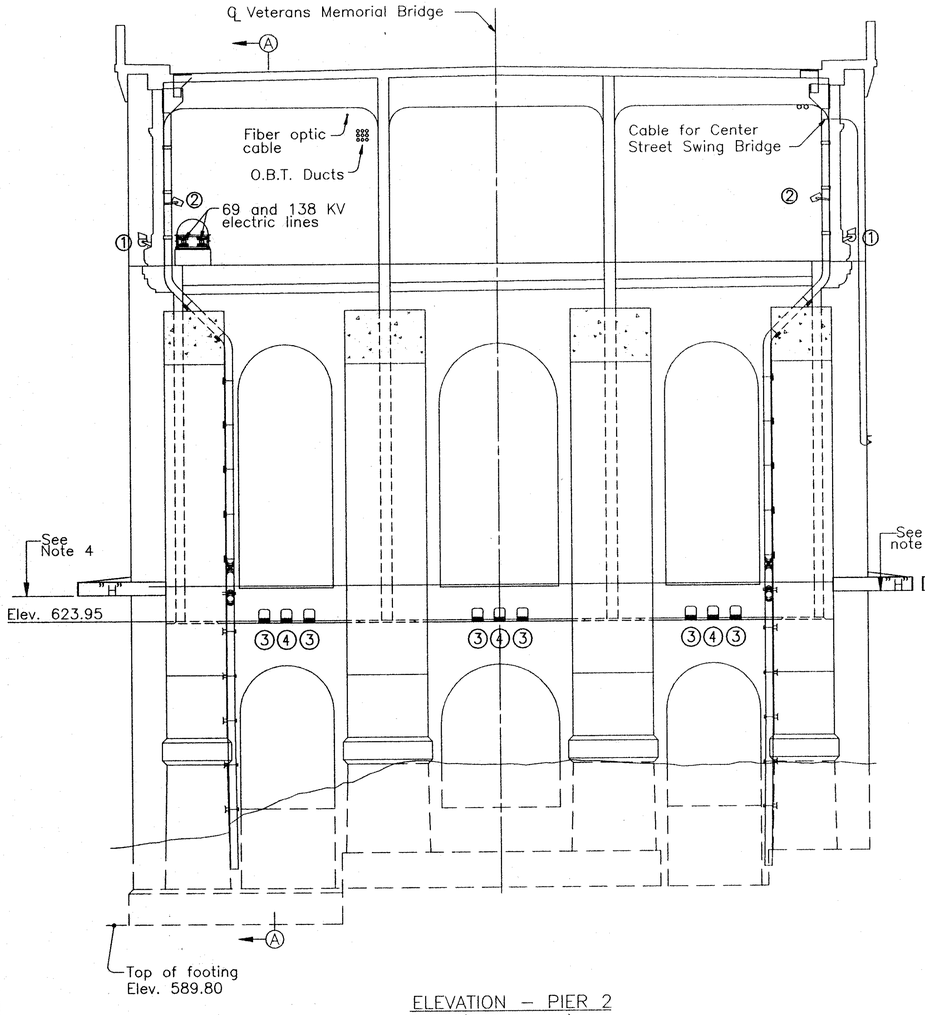

ELEVATION – PIER 2
(Looking West)
(Lower Deck, Columns and Floorbeam 3,1 not shown)
Scale: 1/8" = 1'-0"

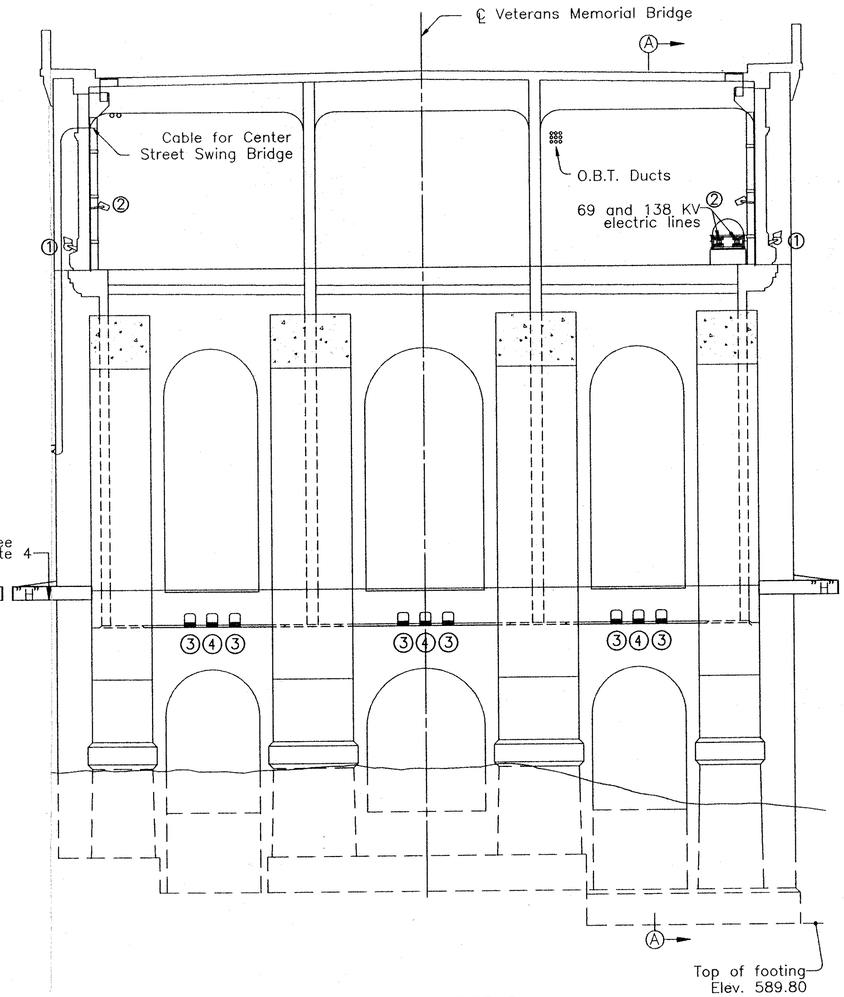

ELEVATION – PIER 2
(Looking East)
(Lower Deck, Columns and Floorbeam 3,1 not shown)
Scale: 1/8" = 1'-0"

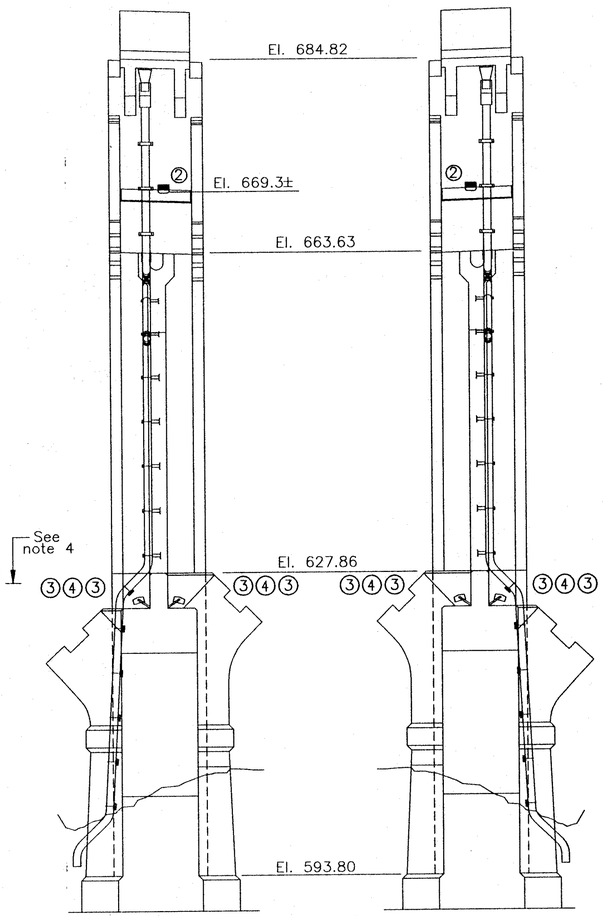

SECTION A–A
(South Bay)
Scale: 1/8" = 1'-0"

SECTION A–A
(North Bay)
Scale: 1/8" = 1'-0"

Notes:
1. For conduit, see Arch Lighting Plan Sheet 105R and 106R.
2. At piers with drains, mount type (2) fixtures an additional 10" out from wall.
3. See Pier Mounting Bracket Details Drawing 103K.
4. Mount bottom bracket at El. 626.9

HOWARD NEEDLES TAMMEN & BERGENDOFF
ARCHITECTS ENGINEERS PLANNERS
HNTB

MADE BY: F.E.G. DATE: 7/17/95
DRAWN BY: L.M.L. DATE: 7/17/95
CHECKED BY: N.C.Y. DATE: 7/17/95
SCALE: 1/8" = 1'-0"
PIER2

PIER 2 LIGHTING ELEVATIONS

FHWA REGION	STATE	PROJECT	
5	OHIO		

119/412

CUYAHOGA COUNTY
CUY-6-14.99

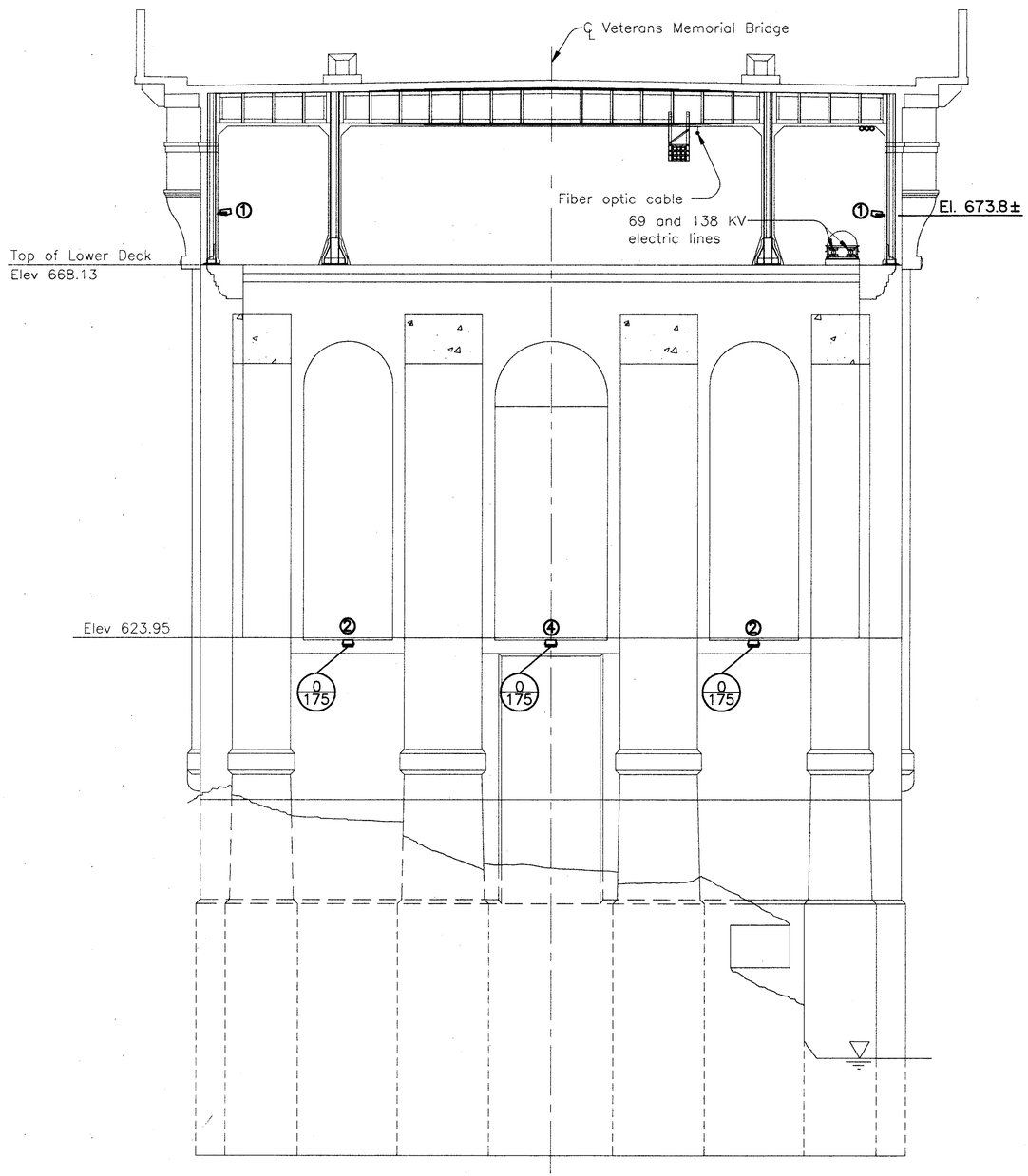

ELEVATION – WEST FACE
(Columns and Floorbeam 3,18 not shown)
Scale: 1/8"=1'-0"

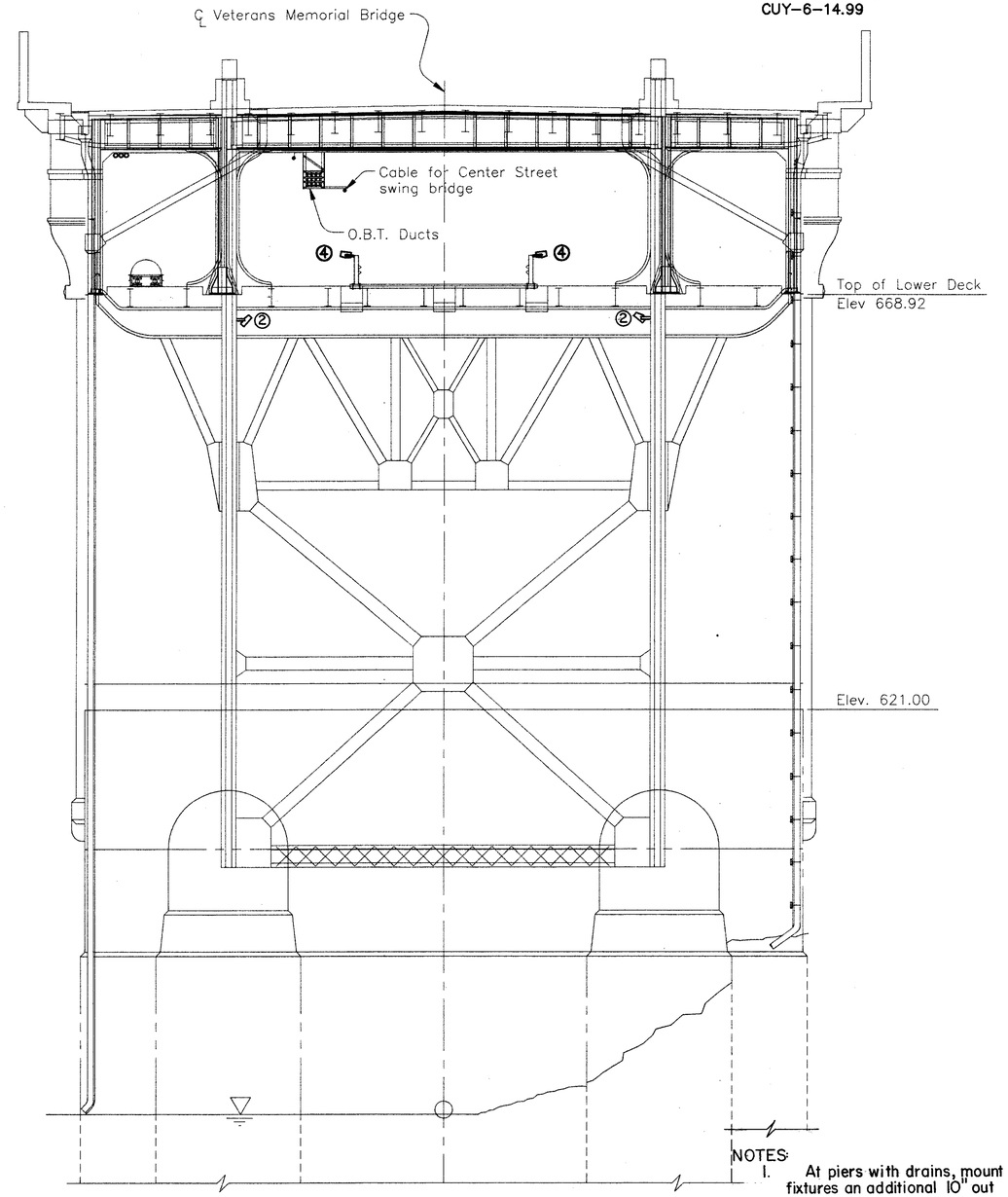

SECTION A/E14

ELEVATION – EAST FACE
(Span 4 panel point 0 not shown)
Scale: 1/8"=1'-0"

NOTES:
1. At piers with drains, mount fixtures an additional 10" out from wall.
2. Install Type ② and ④ luminaires with wire entry away from wall. See Sheet 130.
3. For conduit, see Arch Lighting Plan Sheet 103.

HOWARD NEEDLES TAMMEN & BERGENDOFF
ARCHITECTS ENGINEERS PLANNERS HNTB

MADE BY: F.E.G. DATE: 2/21/94
DRAWN BY: P.J.K. DATE: 2/23/94
CHECKED BY: N.C.Y. DATE:
SCALE: 1/8"=1'-0"

21471/PIER3 1=1

PIER 3 LIGHTING ELEVATIONS

FHWA REGION	STATE	PROJECT	
5	OHIO		

119R
412R

CUYAHOGA COUNTY
CUY-6-14.99

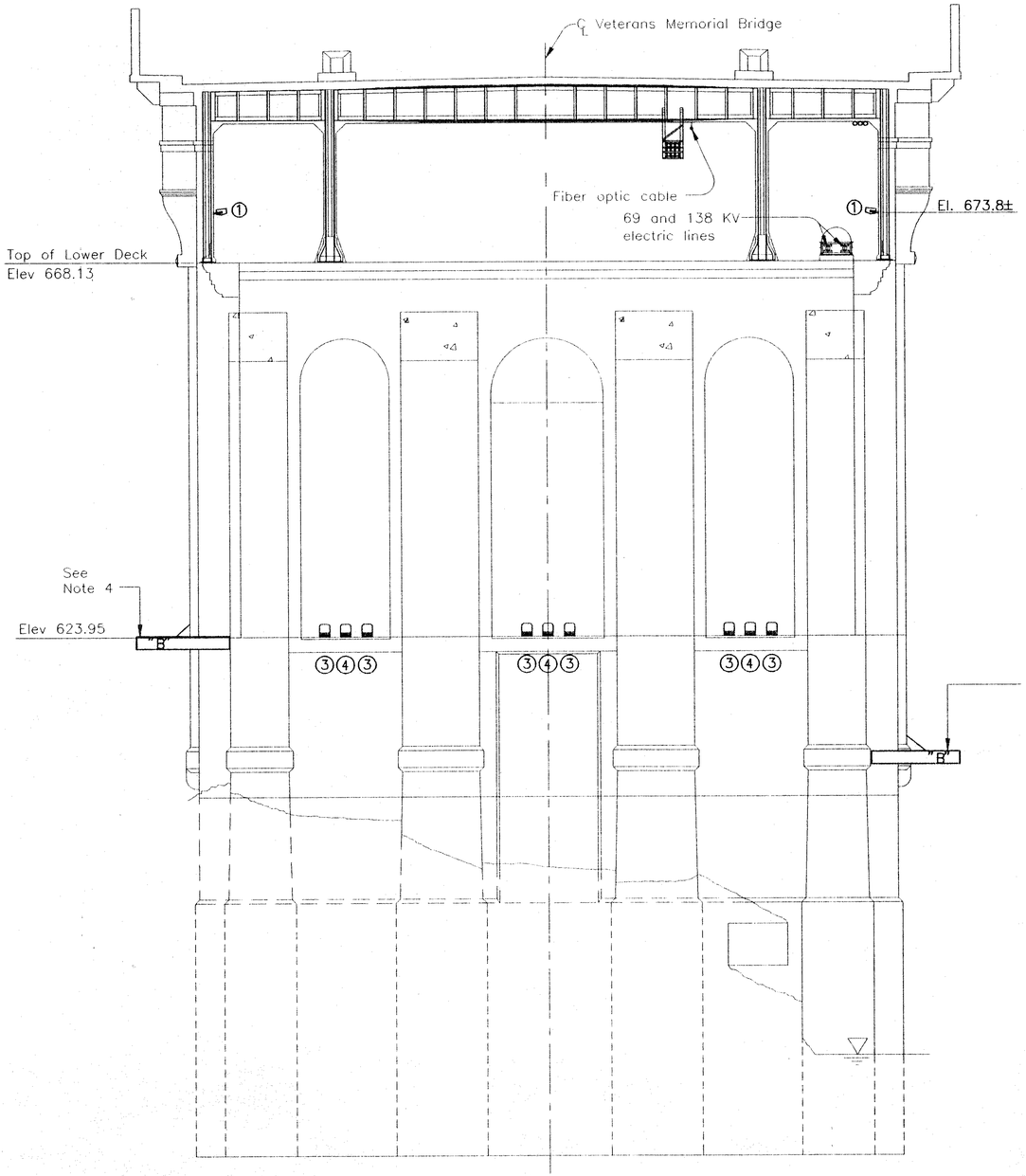

ELEVATION – WEST FACE
(Columns and Floorbeam 3,18 not shown)
Scale: 1/8"=1'-0"

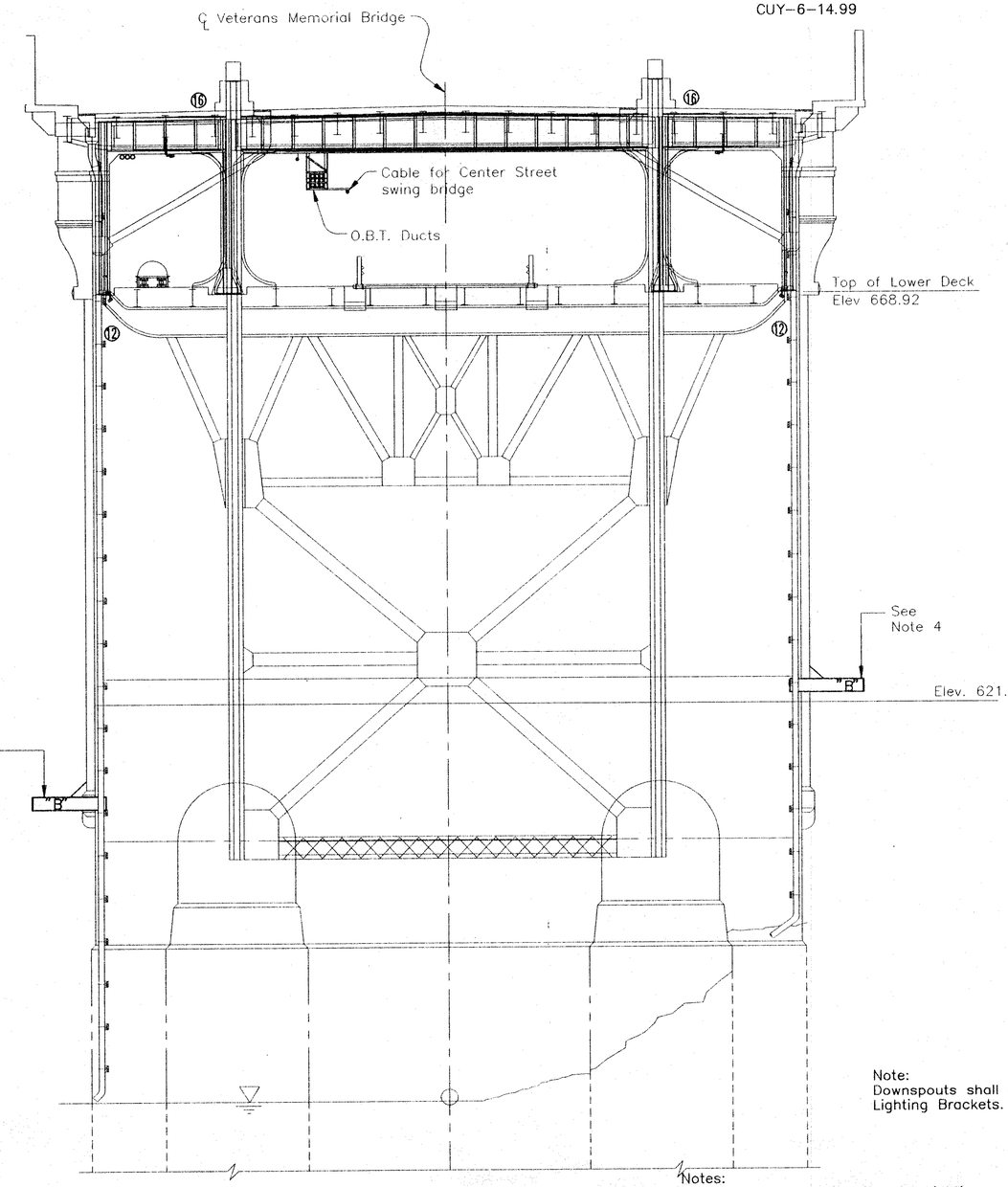

SECTION A/E14

ELEVATION – EAST FACE
(Span 4 panel point 0 not shown)
Scale: 1/8"=1'-0"

Note:
Downspouts shall clear Lighting Brackets.

Notes:
1. For conduit, see Arch Lighting Plan Sheet 105R.
2. At piers with drains, mount fixtures an additional 10" out from wall.
3. See Pier Mounting Bracket Details Drawing 103K.
4. Mount top of bracket at El. 623.70
5. Mount top of bracket at El. 610.05

HOWARD NEEDLES TAMMEN & BERGENDOFF
ARCHITECTS ENGINEERS PLANNERS HNTB

MADE BY: F.E.G. DATE: 7/17/95
DRAWN BY: L.M.L. DATE: 7/17/95
CHECKED BY: N.C.Y. DATE: 7/17/95
SCALE: 1/8"=1'-0"
PIER3

G:\23318\VETMEM\PIER3

PIER 3 LIGHTING ELEVATIONS

FHWA REGION	STATE	PROJECT	
5	OHIO		

120/412

CUYAHOGA COUNTY
CUY-6-14.99

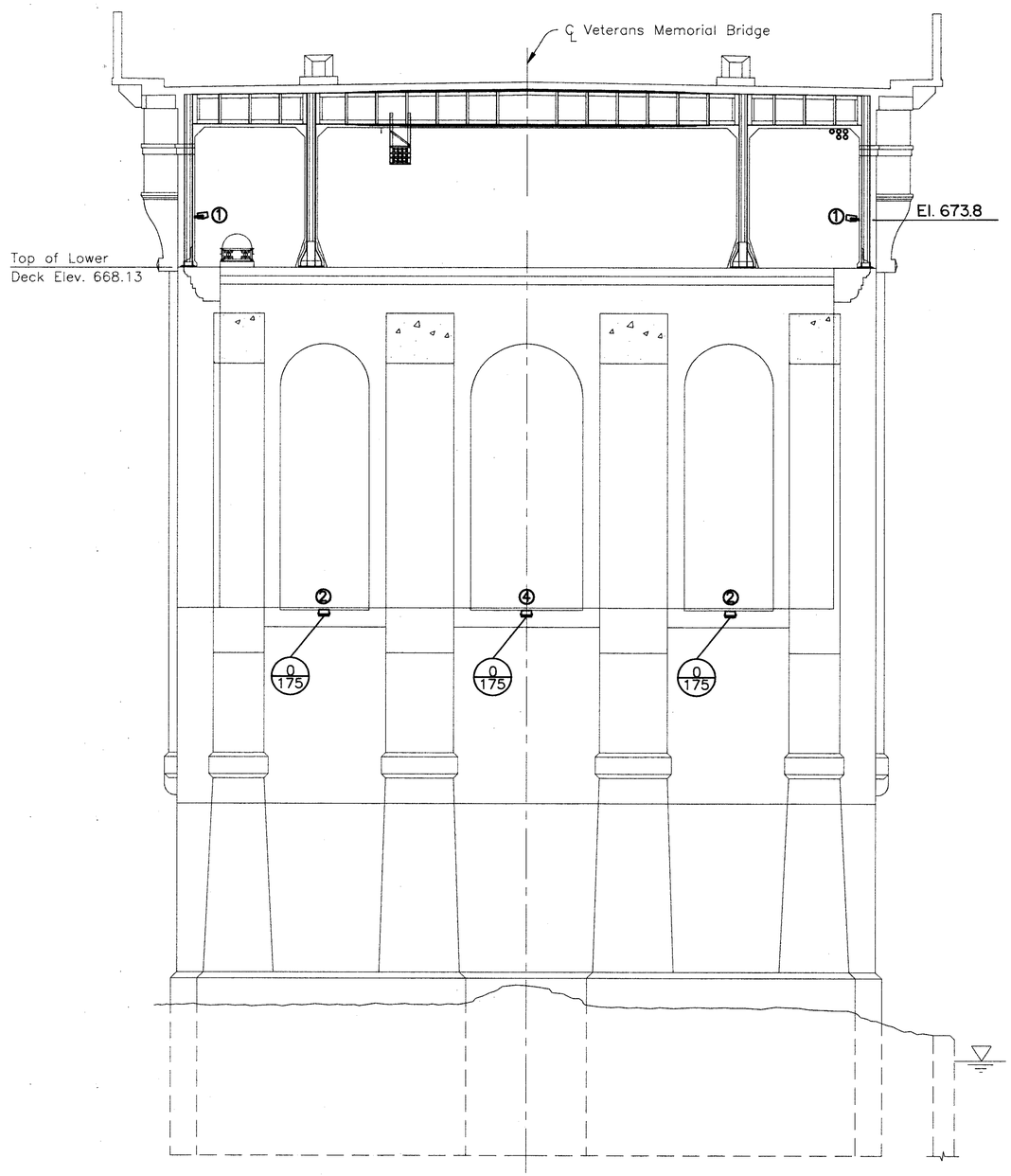

ELEVATION – EAST FACE
(Columns and Floorbeam 5,1 not shown)
Scale: 1/8"=1'-0"

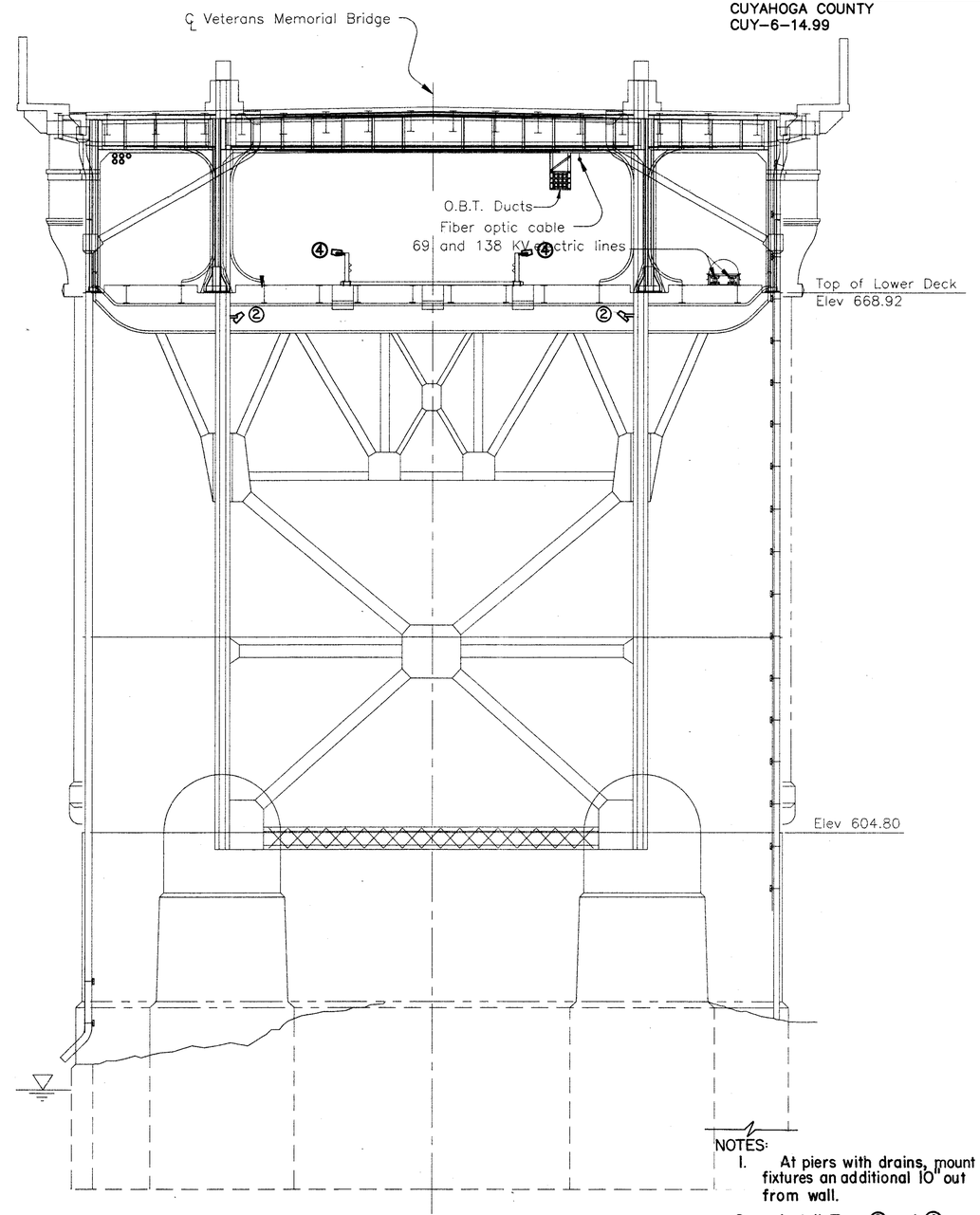

ELEVATION – WEST FACE
(Span 4 panel point 0' not shown)
Scale: 1/8"=1'-0"

NOTES:
1. At piers with drains, mount fixtures an additional 10" out from wall.
2. Install Type ② and ④ luminaires with wire entry away from wall. See Sheet 130.
3. For conduit, see Arch Lighting Plan Sheet 105.

HOWARD NEEDLES TAMMEN & BERGENDOFF
ARCHITECTS ENGINEERS PLANNERS HNTB

MADE BY: F.E.G. DATE: 2/21/94
DRAWN BY: P.J.K. DATE: 2/23/94
CHECKED BY: N.C.Y. DATE:
SCALE: 1/8"=1'-0"

21471/PB214 1of1

PIER 4 LIGHTING ELEVATIONS

FHWA REGION	STATE	PROJECT	
5	OHIO		

120R
412R

CUYAHOGA COUNTY
CUY-6-14.99

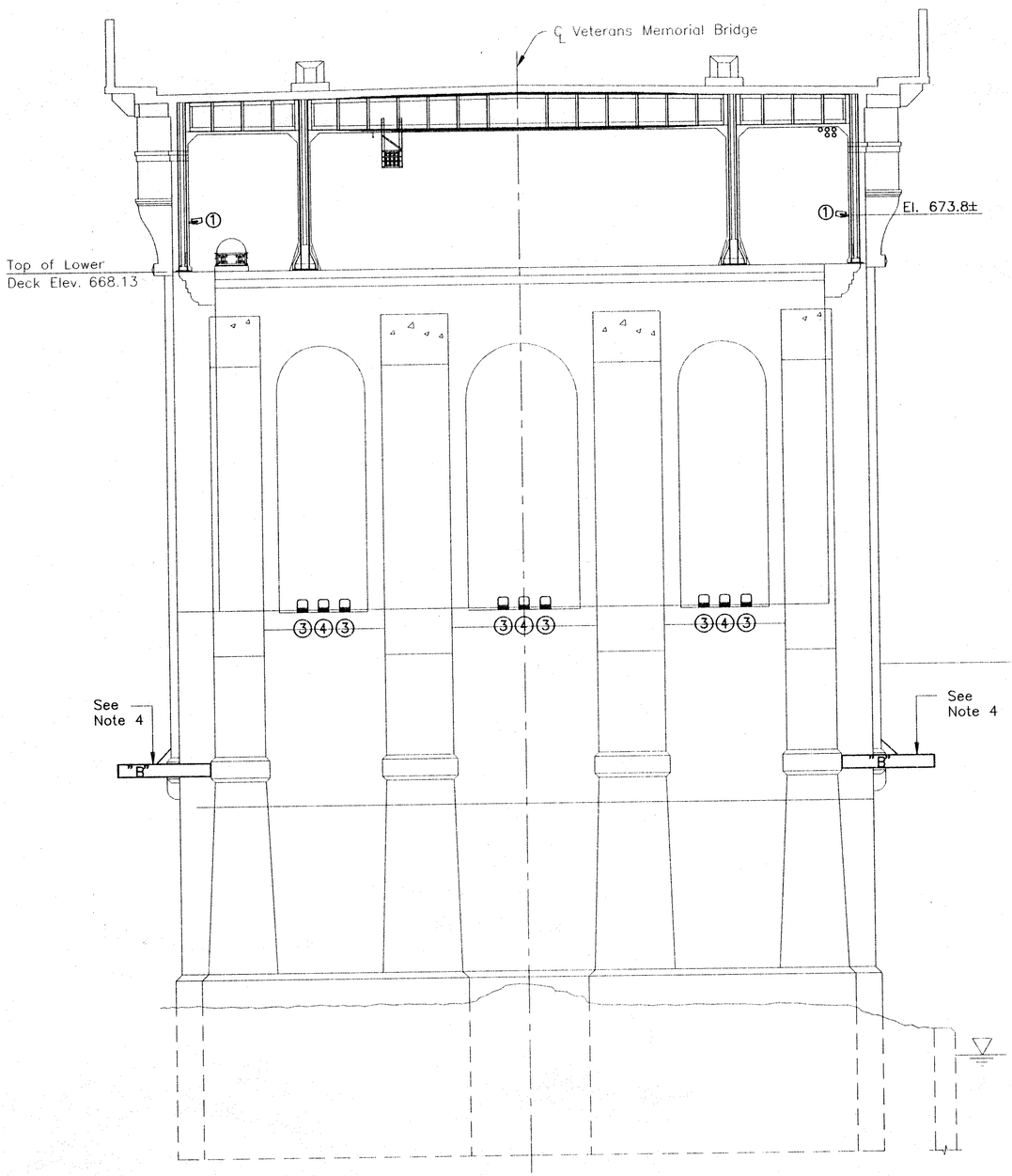

ELEVATION – EAST FACE
(Columns and Floorbeam 5,1 not shown)
Scale: 1/8"=1'-0"

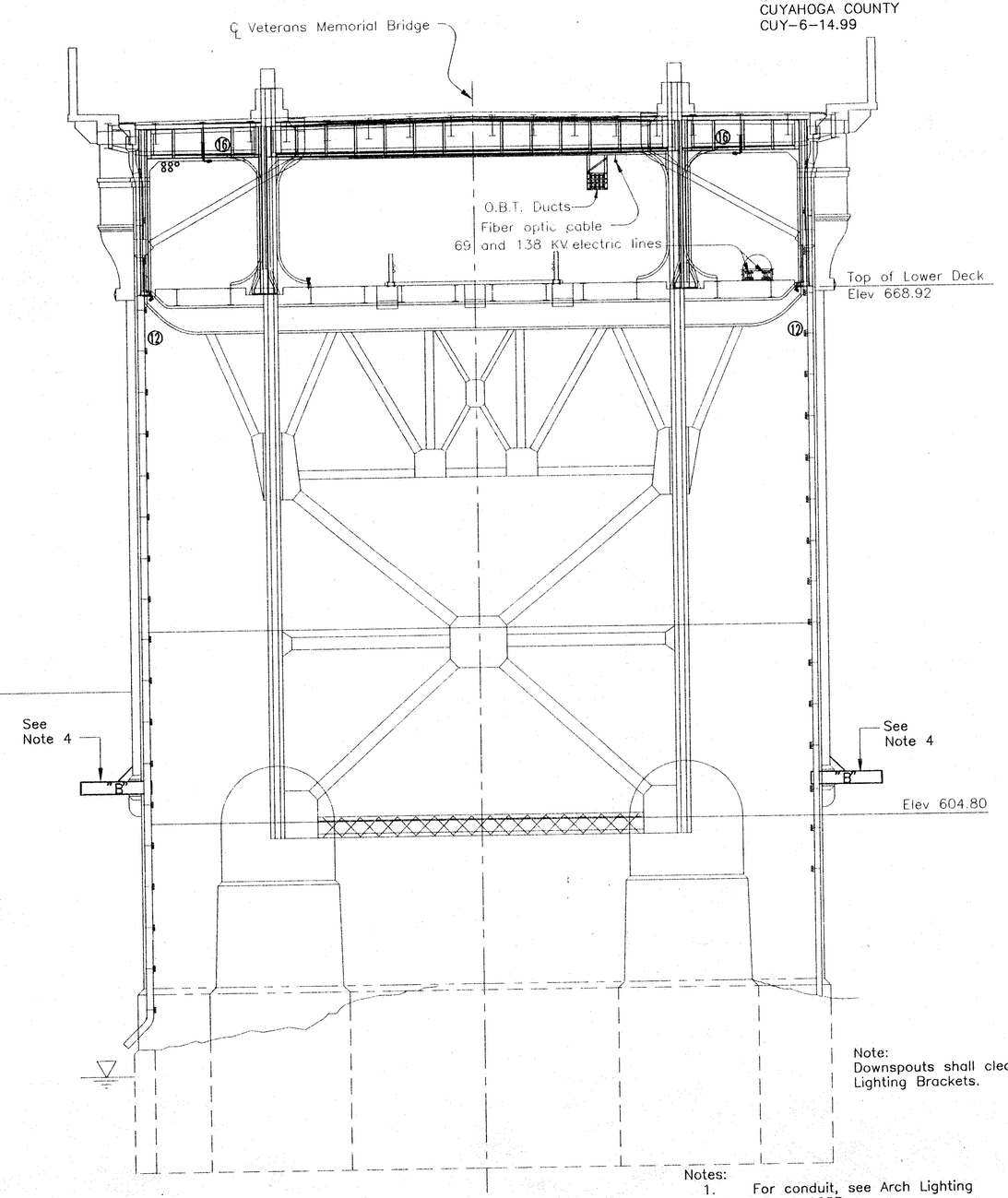

ELEVATION – WEST FACE
(Span 4 panel point 0' not shown)
Scale: 1/8"=1'-0"

Note:
Downspouts shall clear Lighting Brackets.

Notes:
1. For conduit, see Arch Lighting Plan Sheet 105R.
2. At piers with drains, mount fixtures an additional 10" out from wall.
3. See Pier Mounting Bracket Details Drawing 103K.
4. Mount top Edge of Bracket at El. 610.05

HOWARD NEEDLES TAMMEN & BERGENDOFF
ARCHITECTS ENGINEERS PLANNERS
HNTB

MADE BY F.E.G. DATE 7/17/95
DRAWN BY P.J.K. DATE 7/17/95
CHECKED BY N.C.Y. DATE 7/17/95
SCALE 1/8"=1'-0"
PIER4

G:\23318\VETMEM\PIER4

PIER 4 LIGHTING ELEVATIONS

FHWA REGION	STATE	PROJECT	
5	OHIO		

121/412

CUYAHOGA COUNTY
CUY-6-14.99

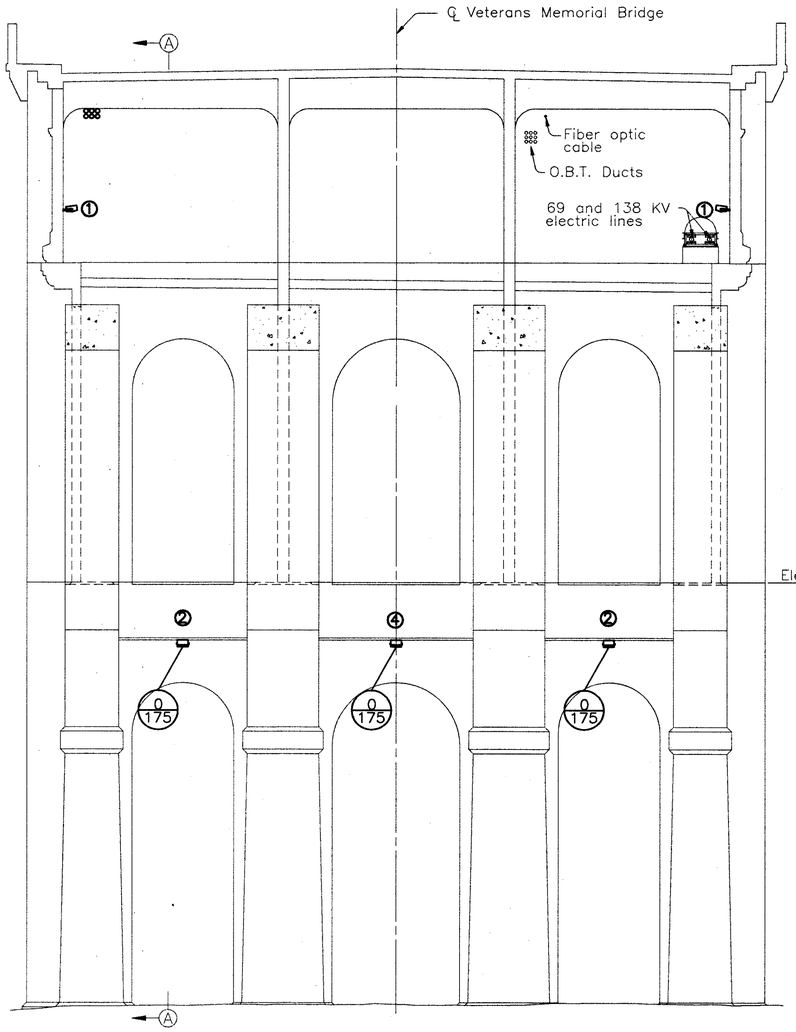

ELEVATION – PIER 5
(Looking East)
(Lower Deck, Columns and Floorbeam 5,15 not shown)
Scale: 1/8"=1'-0"

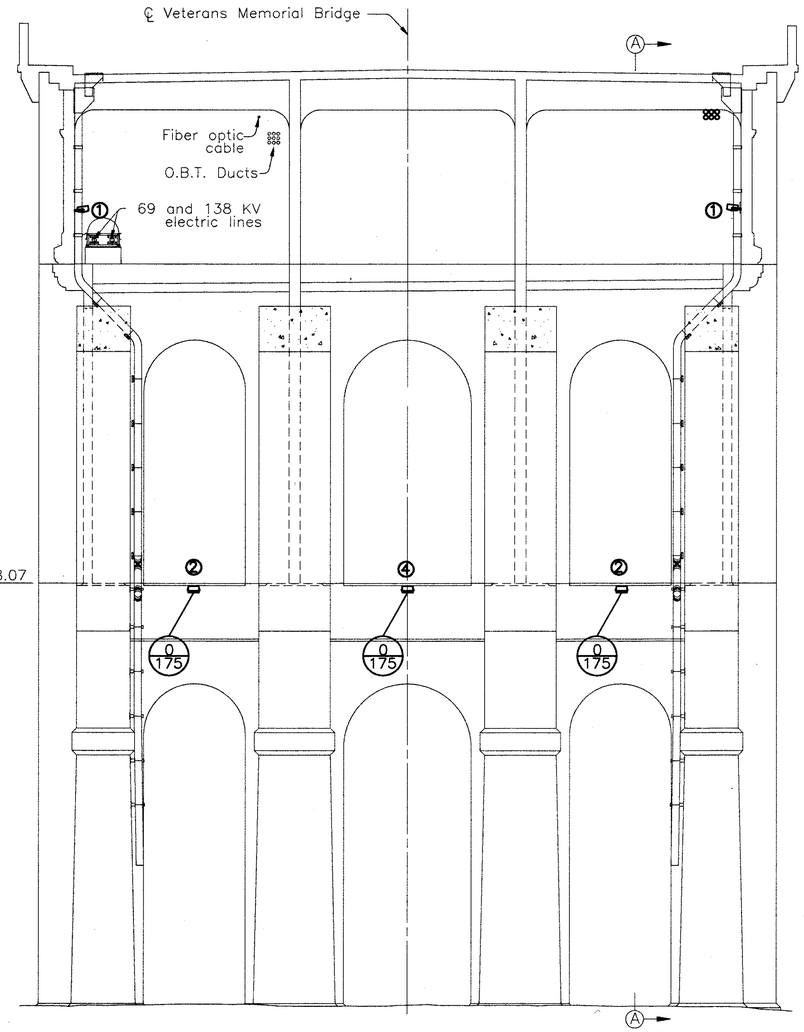

ELEVATION – PIER 5
(Looking West)
(Lower Deck, Columns and Floorbeam 5,15 not shown)
Scale: 1/8"=1'-0"

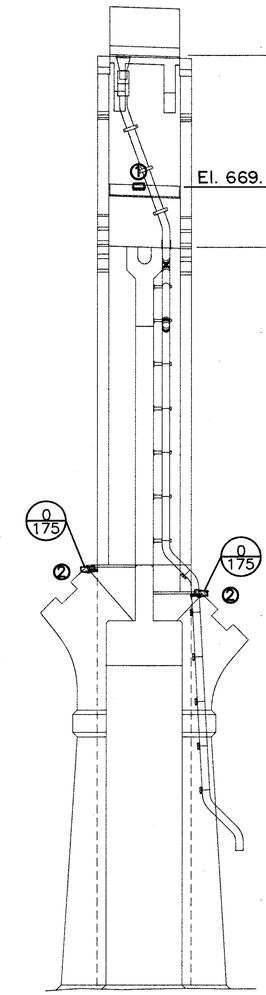

SECTION A–A
(North Bay)
(Railing not shown)
Scale: 1/8"=1'-0"

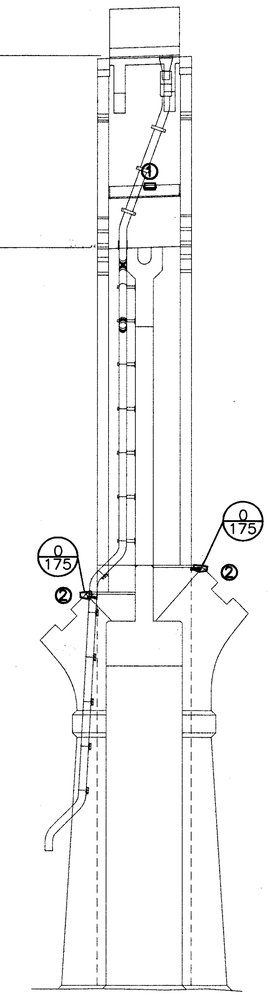

SECTION A–A
(South Bay)
(Railing not shown)
Scale: 1/8"=1'-0"

NOTES:

1. At piers with drains, mount fixtures an additional 10" out from wall.
2. Install Type ② and ④ luminaire with wire entry away from wall. See Sheet 130.
3. For conduit, see Arch Lighting Plan Sheets 105 and 106.

HOWARD NEEDLES TAMMEN & BERGENDOFF HNTB
ARCHITECTS ENGINEERS PLANNERS

MADE BY: F.E.G. DATE: 2/21/94
DRAWN BY: P.J.K. DATE: 2/23/94
CHECKED BY: N.C.Y. DATE:
SCALE: 1/8"=1'-0"

21471/PIERS 1-1

PIER 5 LIGHTING ELEVATIONS

FHWA REGION	STATE	PROJECT	
5	OHIO		

121R
412R

CUYAHOGA COUNTY
CUY-6-14.99

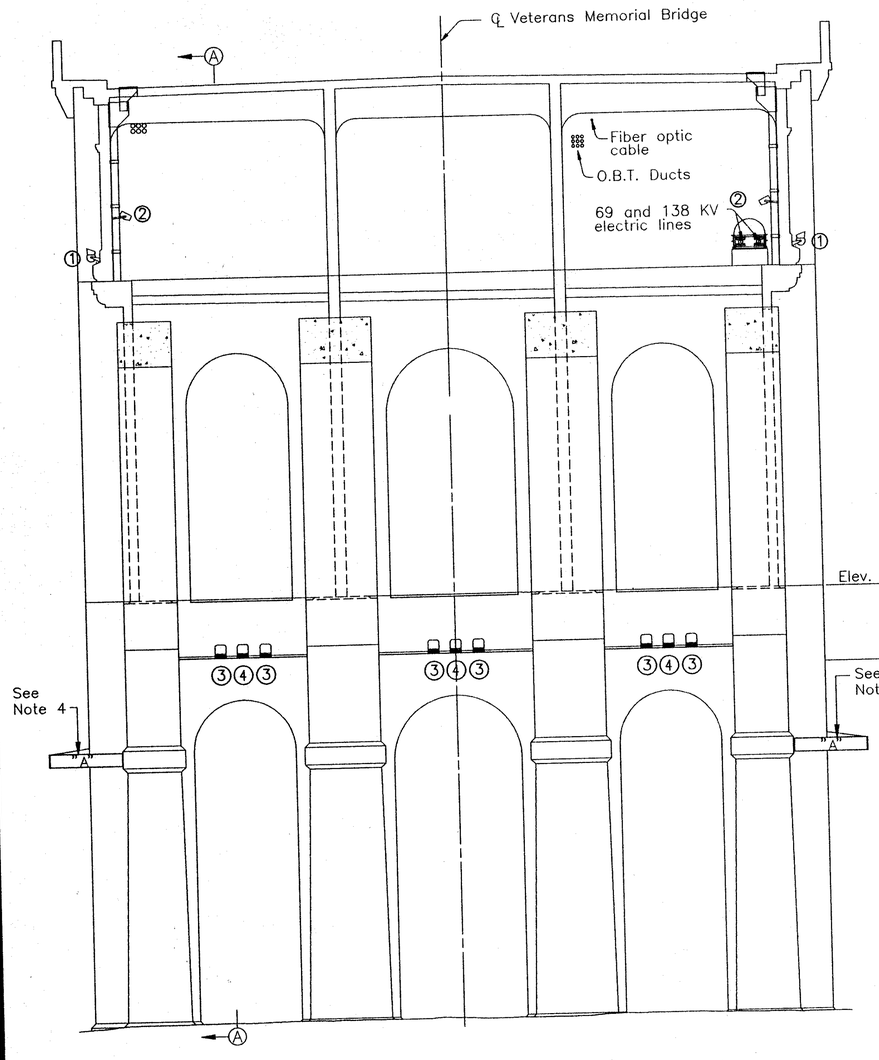

ELEVATION – PIER 5
(Looking East)
(Lower Deck, Columns and Floorbeam 5,15 not shown)
Scale: 1/8"=1'-0"

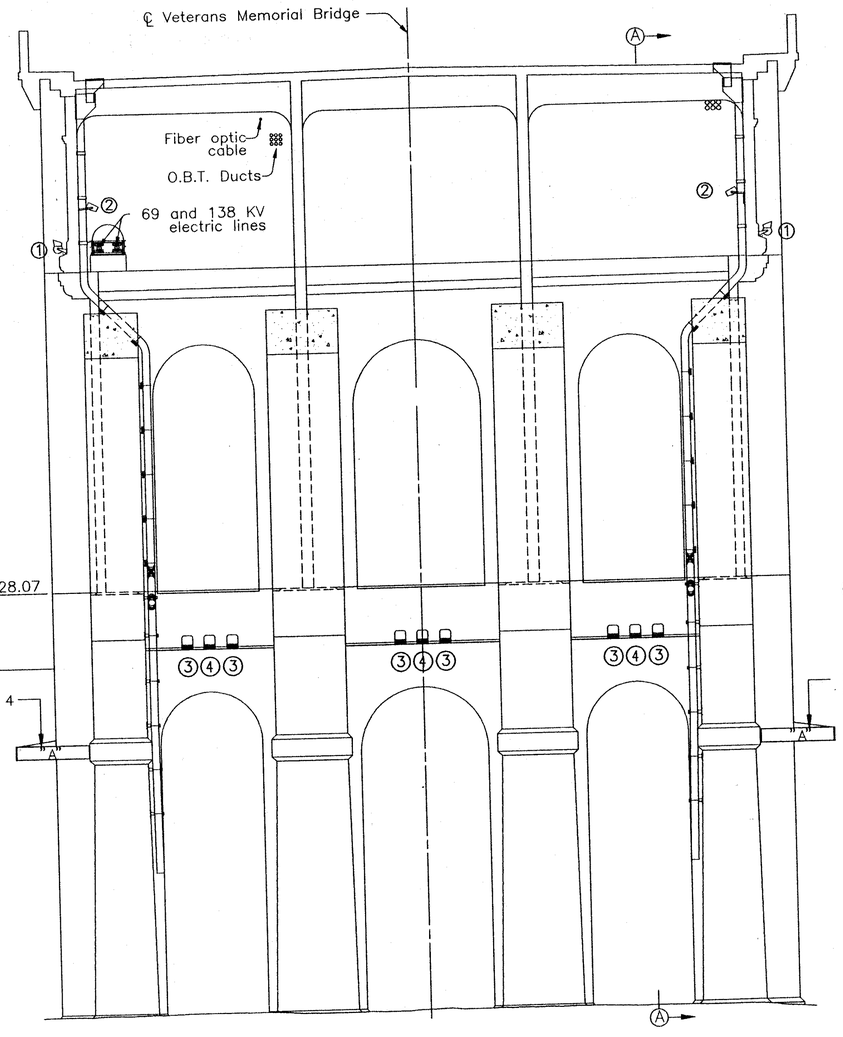

ELEVATION – PIER 5
(Looking West)
(Lower Deck, Columns and Floorbeam 5,15 not shown)
Scale: 1/8"=1'-0"

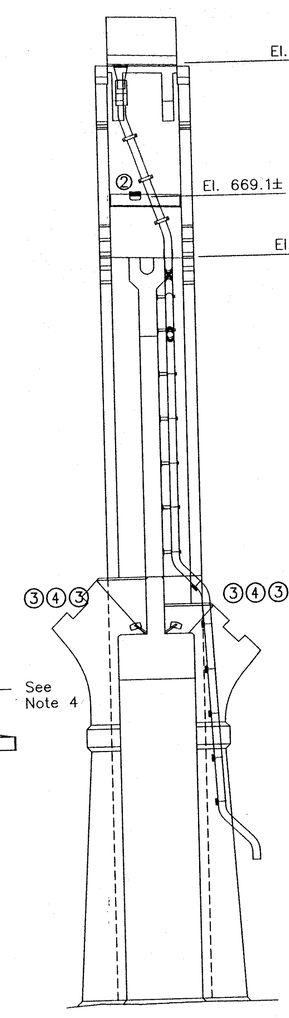

SECTION A–A
(North Bay)
(Railing not shown)
Scale: 1/8"=1'-0"

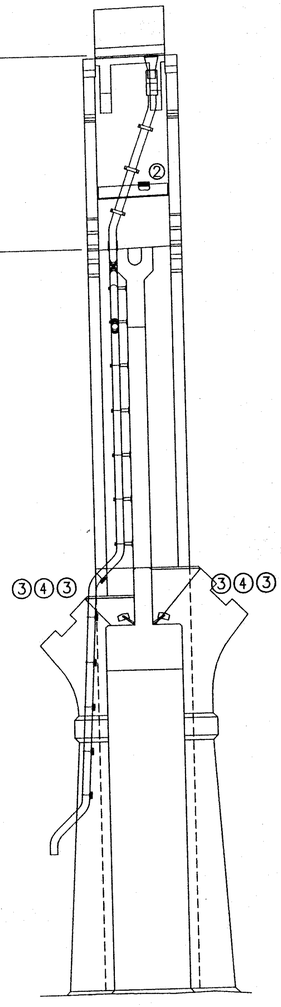

SECTION A–A
(South Bay)
(Railing not shown)
Scale: 1/8"=1'-0"

Notes:
1. For conduit, see Arch Lighting Plan Sheets 105R and 106R.
2. At piers with drains, mount fixtures an additional 10" out from wall.
3. See Pier Mounting Bracket Details Drawing 103K.
4. Mount top Edge of Bracket at El. 611.05

HOWARD NEEDLES TAMMEN & BERGENDOFF
ARCHITECTS ENGINEERS PLANNERS HNTB

MADE BY: F.E.G. DATE: 7/17/95
DRAWN BY: L.M.L. DATE: 7/17/95
CHECKED BY: N.C.Y. DATE: 7/17/27
SCALE: 1/8"=1'-0"
PIER5

PIER 5 LIGHTING ELEVATIONS

FHWA REGION	STATE	PROJECT	
5	OHIO		

122/412

CUYAHOGA COUNTY
CUY-6-14.99

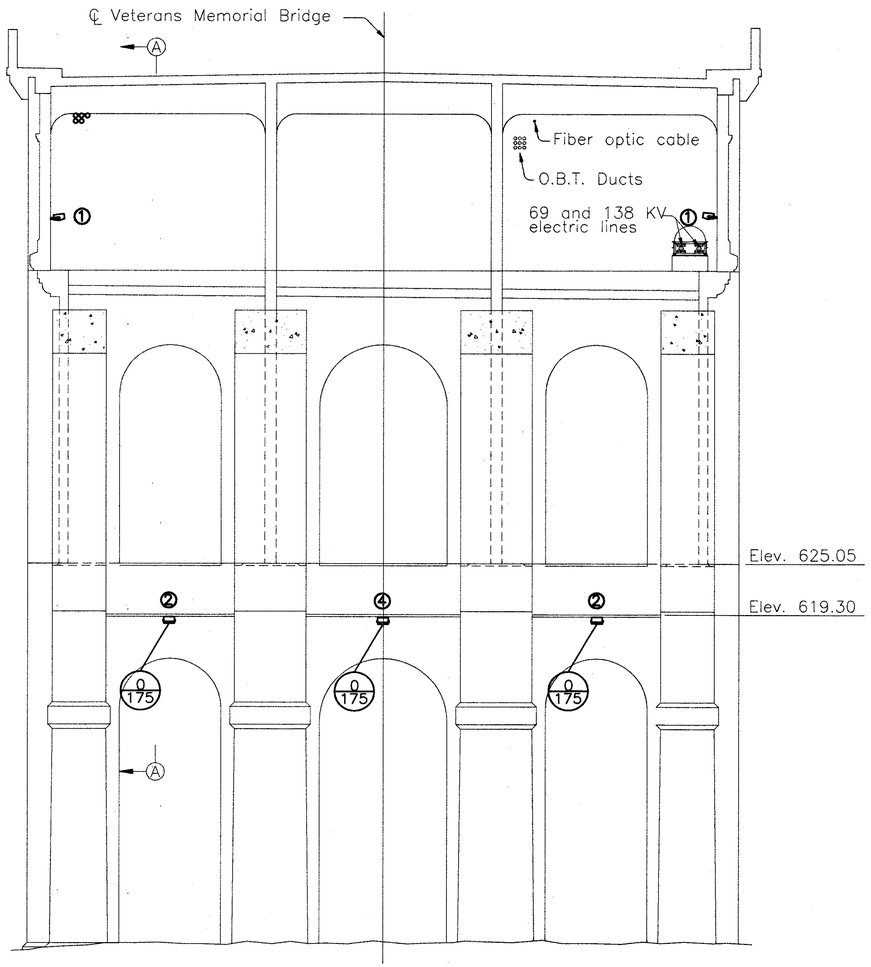

ELEVATION – PIER 6
(Looking East)
(Lower Deck, Columns and Floorbeam 6,15 not shown)
Scale: 1/8"=1'-0"

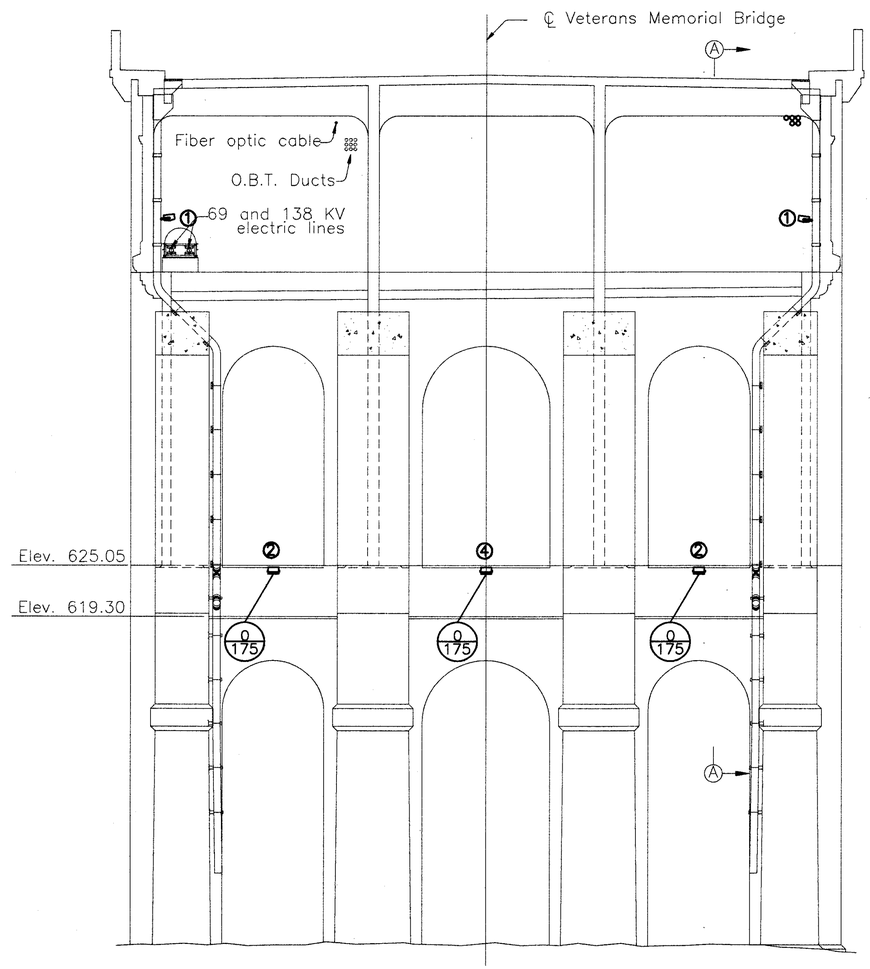

ELEVATION – PIER 6
(Looking West)
(Lower Deck, Columns and Floorbeam 6,15 not shown)
Scale: 1/8"=1'-0"

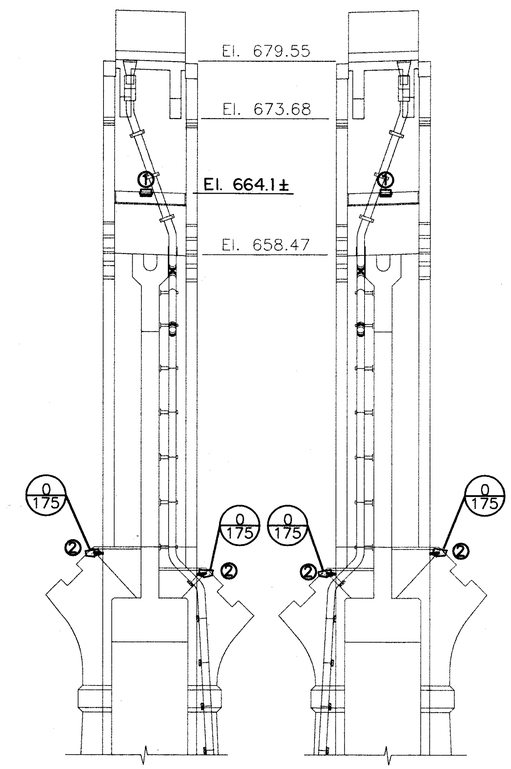

SECTION A–A
(North Bay)
(Railing not shown)
Scale: 1/8"=1'-0"

SECTION A–A
(South Bay)
(Railing not shown)
Scale: 1/8"=1'-0"

NOTES:

1. At piers with drains, mount fixtures an additional 10" out from wall.
2. Install Type 2 and 4 luminaires with wire entry away from wall. See Sheet 130.
3. For conduit, see Arch Lighting Plan Sheet 106.

HOWARD NEEDLES TAMMEN & BERGENDOFF
ARCHITECTS ENGINEERS PLANNERS
HNTB

MADE BY: F.E.G. DATE: 2/21/94
DRAWN BY: P.J.K. DATE: 2/23/94
CHECKED BY: N.C.Y. DATE:
SCALE: 1/8"=1'-0"

2141/PIER6 1=1

PIER 6 LIGHTING ELEVATIONS

FHWA REGION	STATE	PROJECT	
5	OHIO		

122R
412R

CUYAHOGA COUNTY
CUY-6-14.99

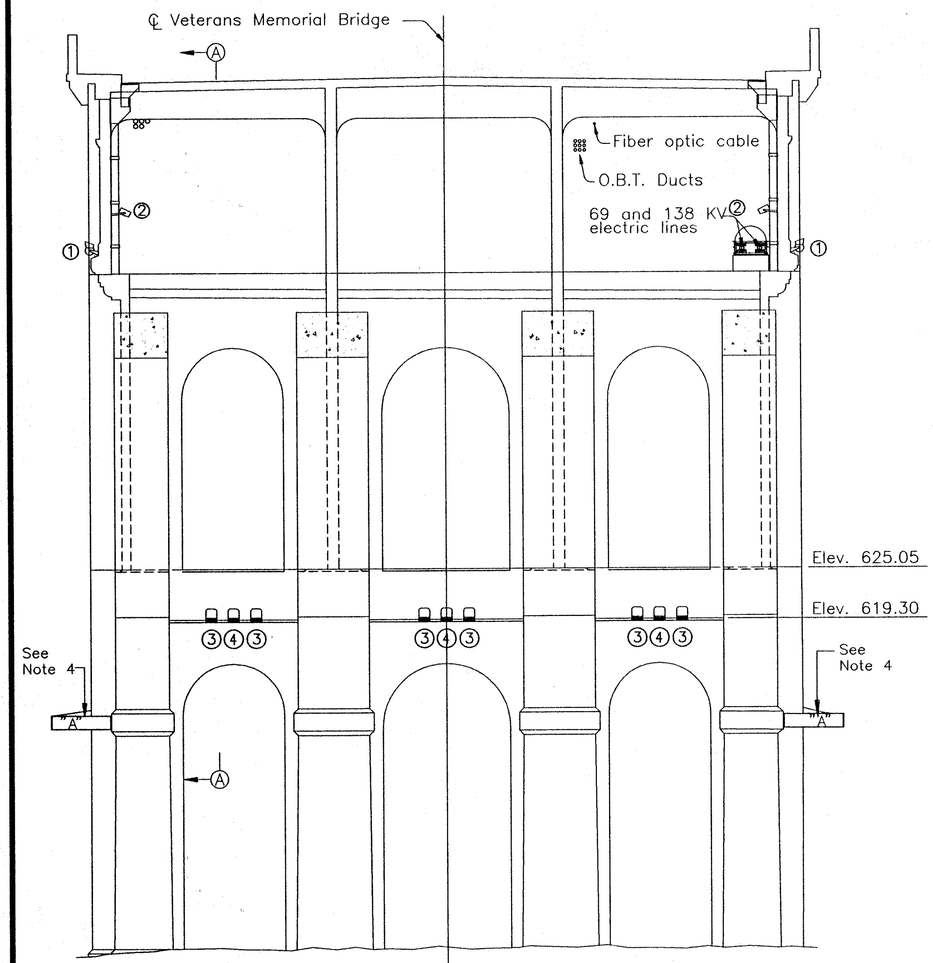

ELEVATION – PIER 6
(Looking East)
(Lower Deck, Columns and Floorbeam 6,15 not shown)
Scale: 1/8"=1'-0"

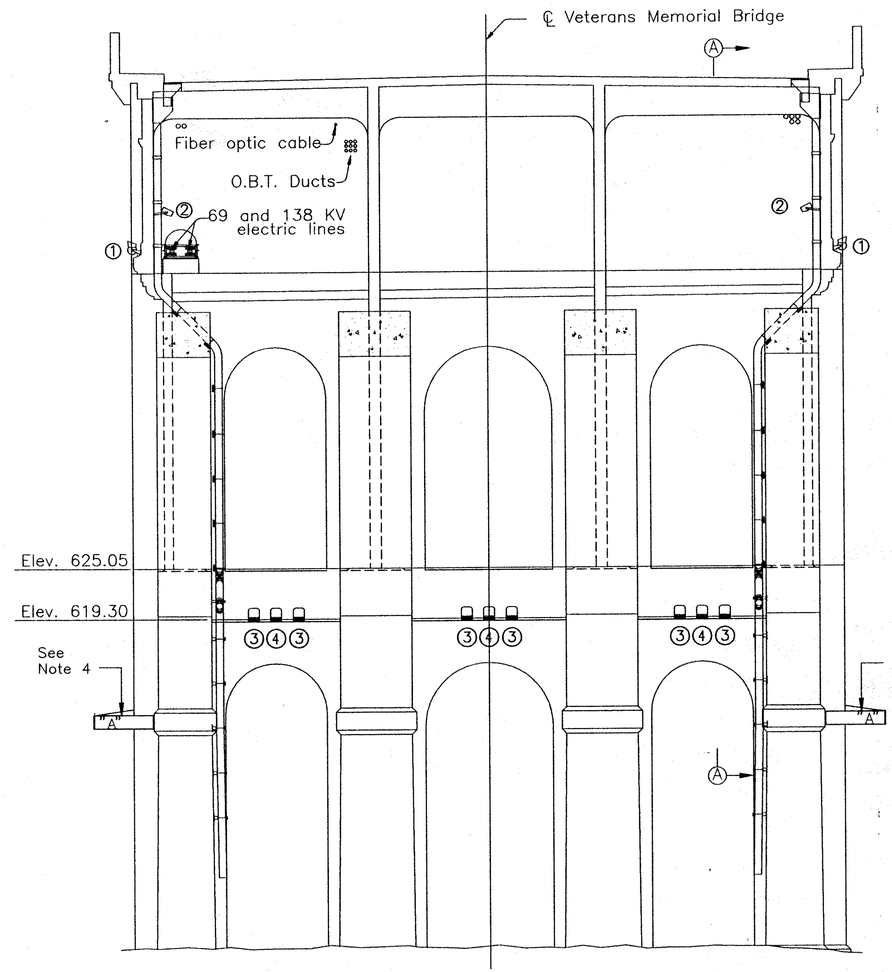

ELEVATION – PIER 6
(Looking West)
(Lower Deck, Columns and Floorbeam 6,15 not shown)
Scale: 1/8"=1'-0"

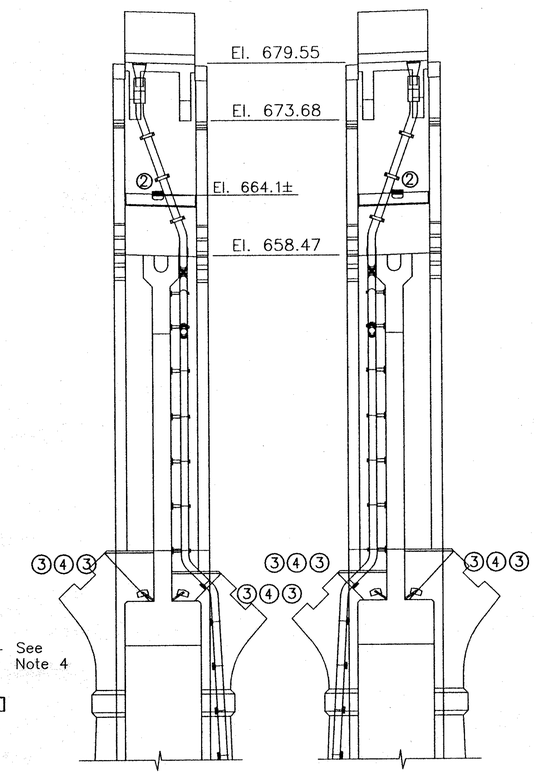

SECTION A–A
(North Bay)
(Railing not shown)
Scale: 1/8"=1'-0"

SECTION A–A
(South Bay)
(Railing not shown)
Scale: 1/8"=1'-0"

Notes:
1. For conduit, see Arch Lighting Plan Sheet 106R.
2. At piers with drains, mount fixtures an additional 10" out from wall.
3. See Pier Mounting Bracket Details Drawing 103K.
4. Mount top Edge of Bracket at El. 608.6

HOWARD NEEDLES TAMMEN & BERGENDOFF
ARCHITECTS ENGINEERS PLANNERS
HNTB

MADE BY: F.E.G. DATE: 7/17/95
DRAWN BY: L.M.L. DATE: 7/17/95
CHECKED BY: N.C.Y. DATE: 7/17/95
SCALE: 1/8"=1'-0"
PIER6

PIER 6 LIGHTING ELEVATIONS

FHWA REGION	STATE	PROJECT	
5	OHIO		

123/412

CUYAHOGA COUNTY
CUY-6-14.99

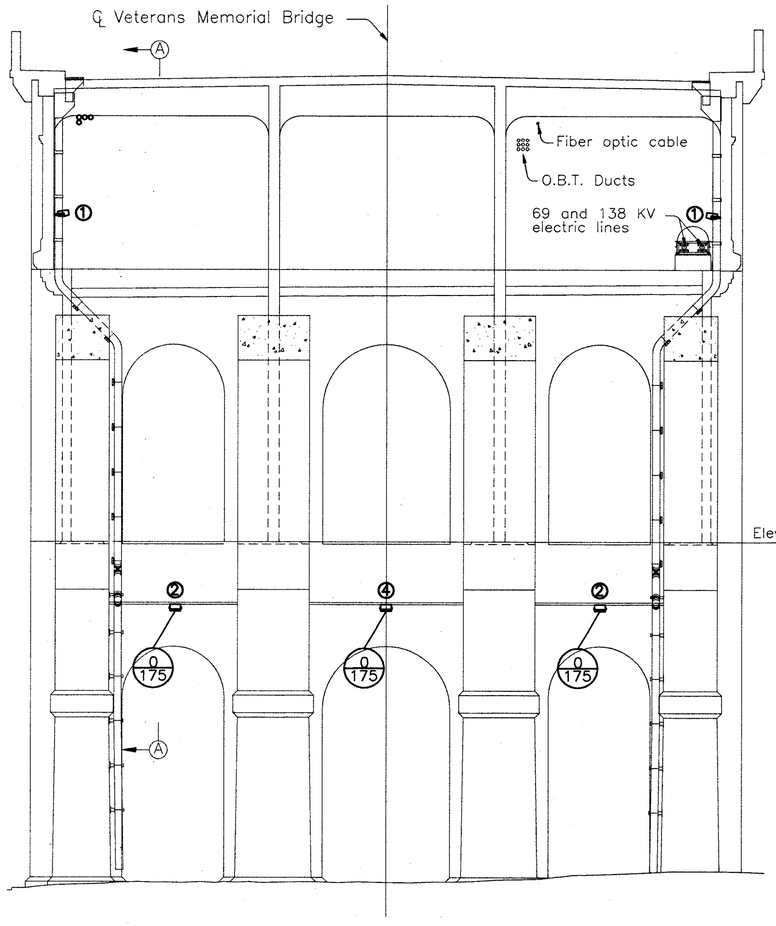

ELEVATION – PIER 7
(Looking East)
(Lower Deck, Columns and Floorbeam 7,15 not shown)
Scale: 1/8"=1'-0"

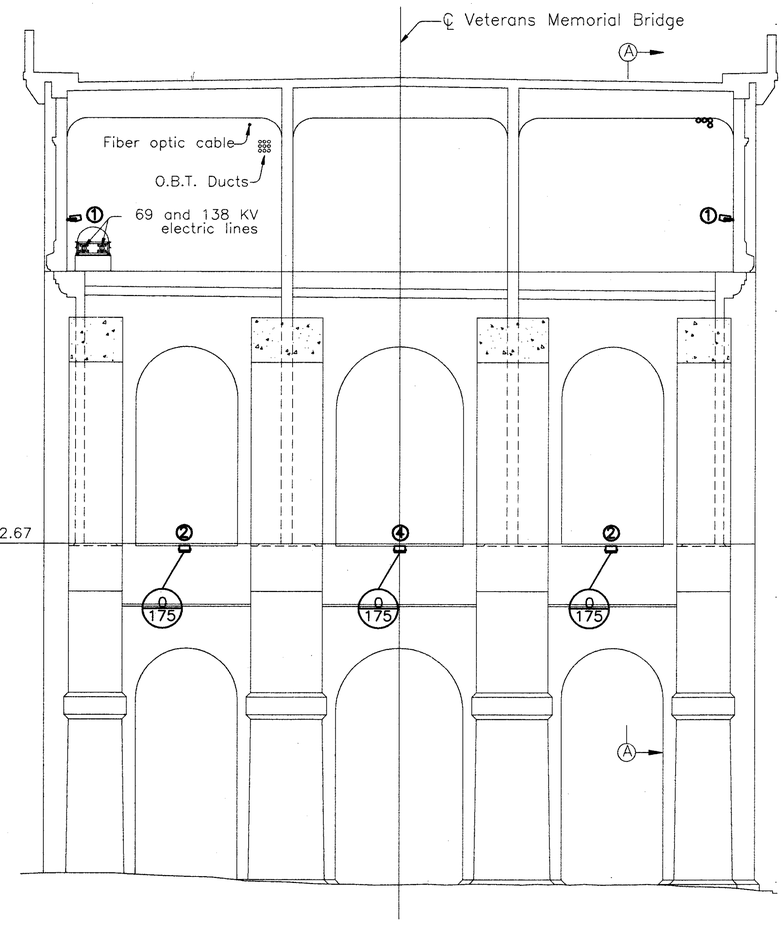

ELEVATION – PIER 7
(Looking West)
(Lower Deck, Columns and Floorbeam 7,15 not shown)
Scale: 1/8"=1'-0"

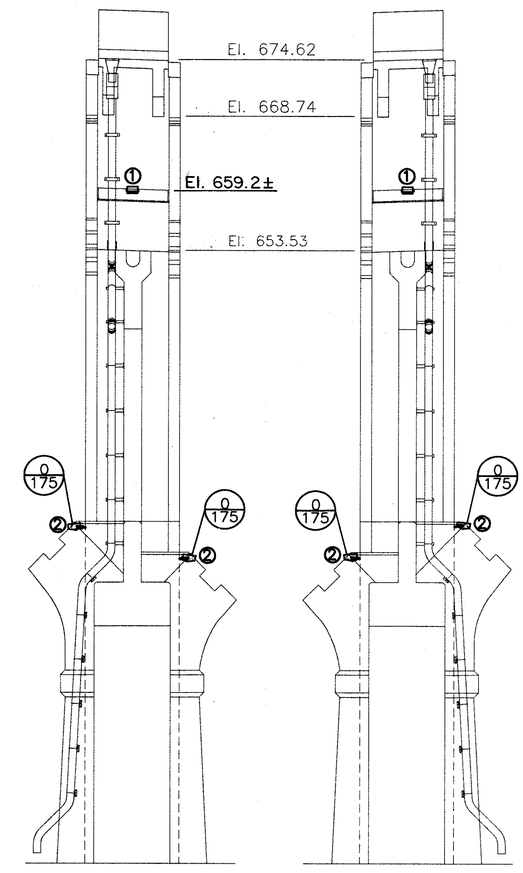

SECTION A–A
(North Bay)
(Railing not shown)
Scale: 1/8"=1'-0"

SECTION A–A
(South Bay)
(Railing not shown)
Scale: 1/8"=1'-0"

NOTES:

1. At piers with drains, mount fixtures an additional 10" out from wall.
2. Install Type ② and ④ luminaires with wire entry away from wall. See Sheet 130.
3. For conduit, see Arch Lighting Plan Sheets 106 and 107.

HOWARD NEEDLES TAMMEN & BERGENDOFF
ARCHITECTS ENGINEERS PLANNERS
HNTB

MADE BY: F.E.G. DATE: 2/21/94
DRAWN BY: P.J.K. DATE: 2/23/94
CHECKED BY: N.C.Y. DATE:
SCALE: 1/8"=1'-0"

21471/PIER7 1=1

PIER 7 LIGHTING ELEVATIONS

FHWA REGION	STATE	PROJECT	
5	OHIO		

123R
412R

CUYAHOGA COUNTY
CUY-6-14.99

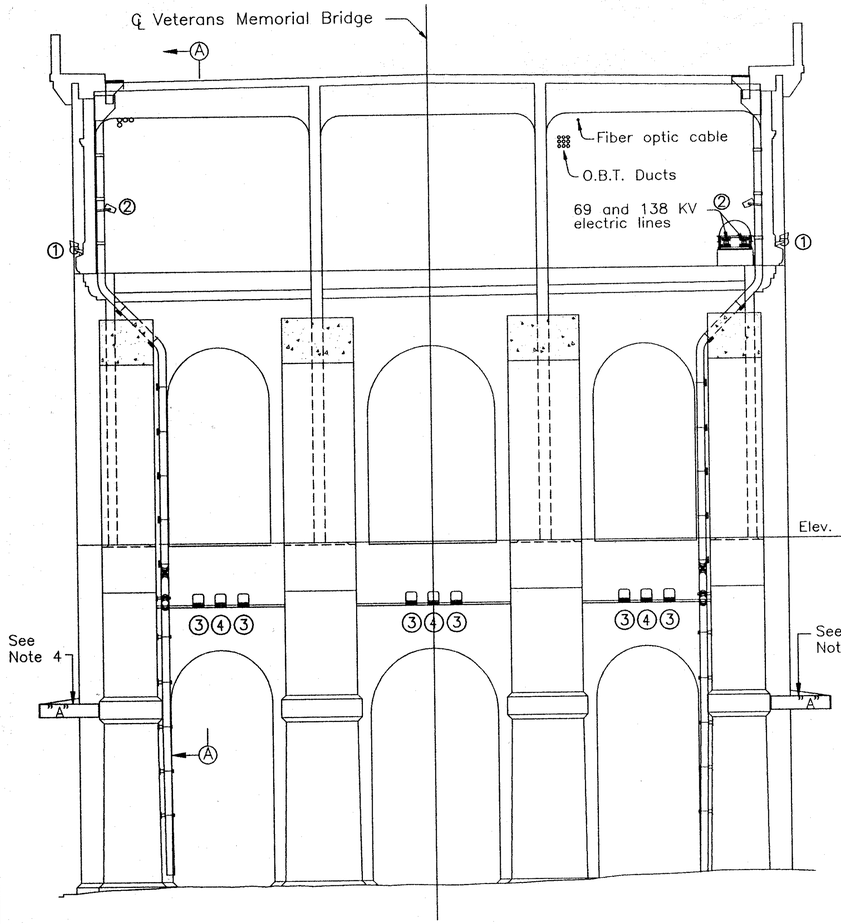

ELEVATION – PIER 7
(Looking East)
(Lower Deck, Columns and Floorbeam 7,15 not shown)
Scale: 1/8"=1'-0"

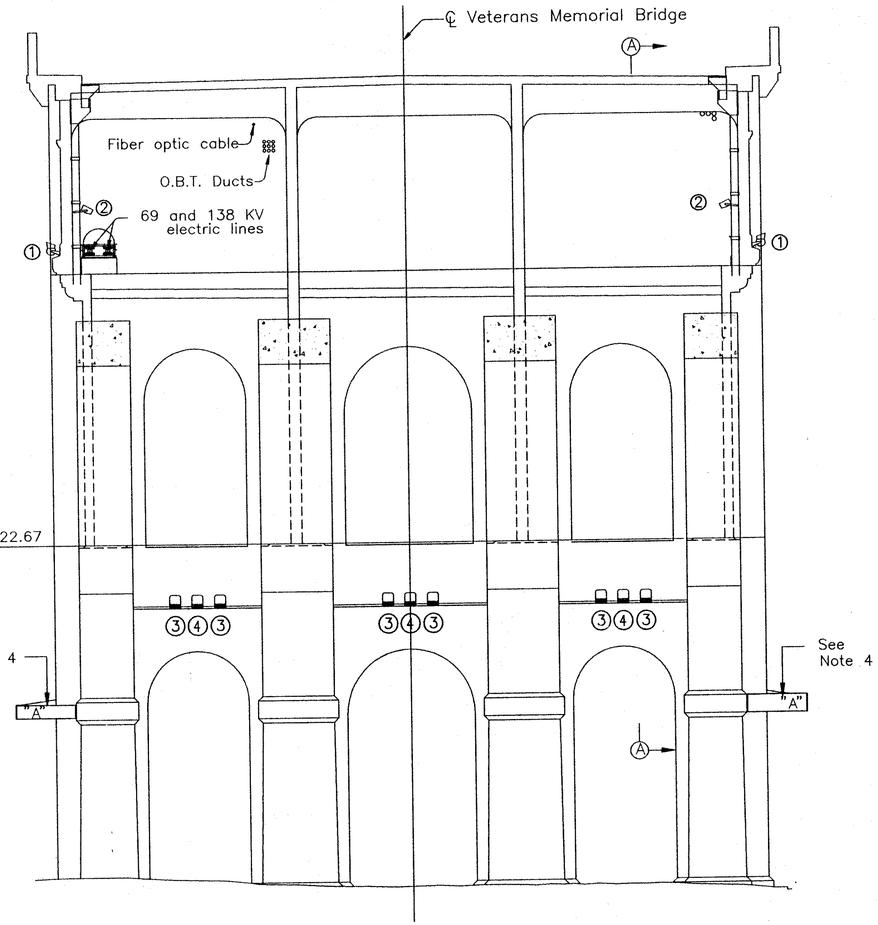

ELEVATION – PIER 7
(Looking West)
(Lower Deck, Columns and Floorbeam 7,15 not shown)
Scale: 1/8"=1'-0"

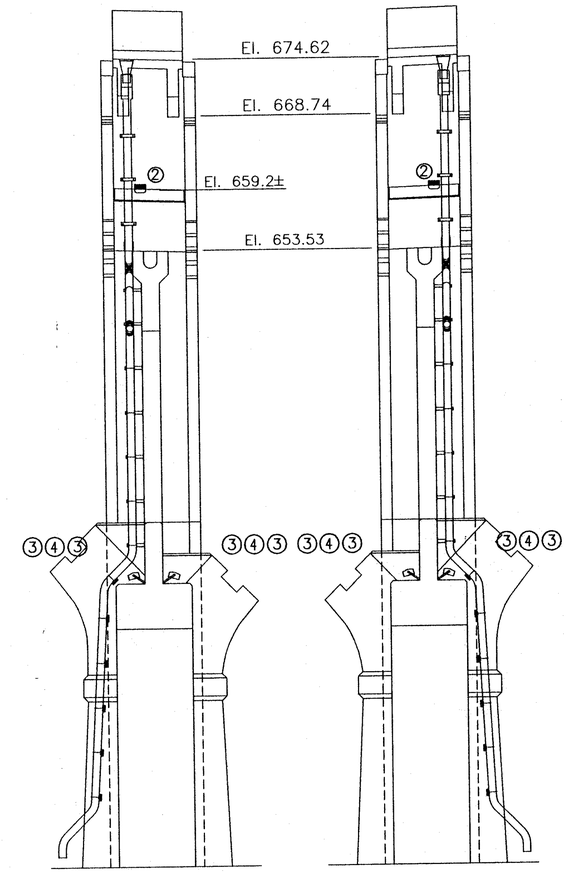

SECTION A–A
(North Bay)
(Railing not shown)
Scale: 1/8"=1'-0"

SECTION A–A
(South Bay)
(Railing not shown)
Scale: 1/8"=1'-0"

Notes:
1. For conduit, see Arch Lighting Plan Sheets 106R.
2. At piers with drains, mount fixtures an additional 10" out from wall.
3. See Pier Mounting Bracket Details Drawing 103K.
4. Mount top Edge of Bracket at El. 605.05

HOWARD NEEDLES TAMMEN & BERGENDOFF
ARCHITECTS ENGINEERS PLANNERS
HNTB

MADE BY: F.E.G. DATE: 7/17/95
DRAWN BY: L.M.L. DATE: 7/17/95
CHECKED BY: N.C.Y. DATE: 7/17/95
SCALE: 1/8"=1'-0"
PIER7

PIER 7 LIGHTING ELEVATIONS

FHWA REGION	STATE	PROJECT	
5	OHIO		

124/214

CUYAHOGA COUNTY
CUY-6-14.99

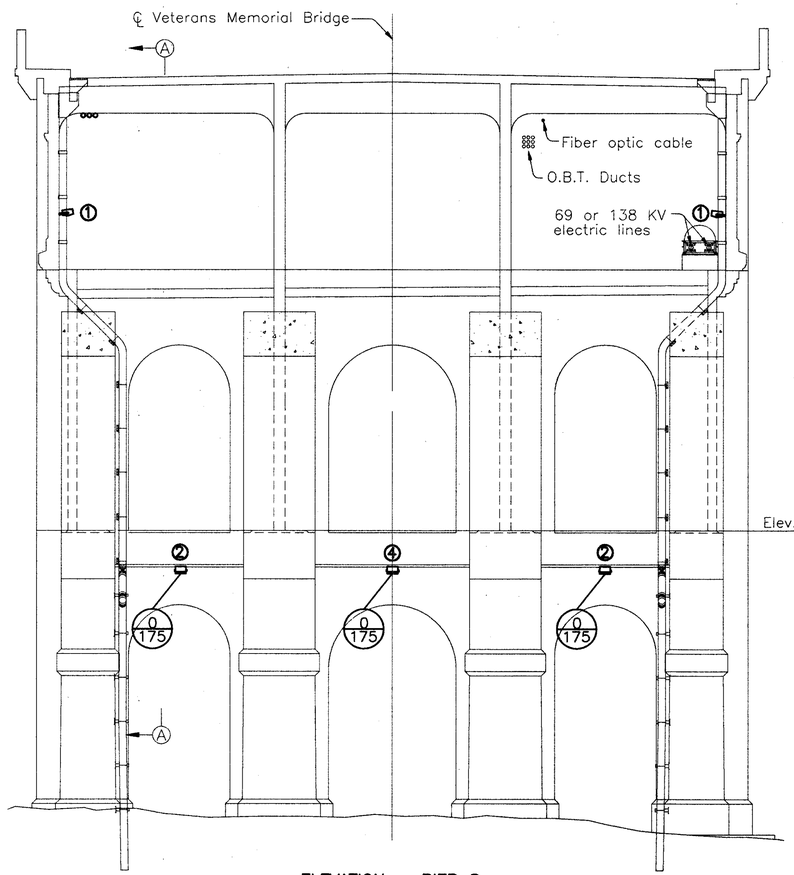

ELEVATION – PIER 8
(Looking East)
(Lower Deck, Columns and Floorbeam 8,15 not shown)
Scale: 1/8"=1'-0"

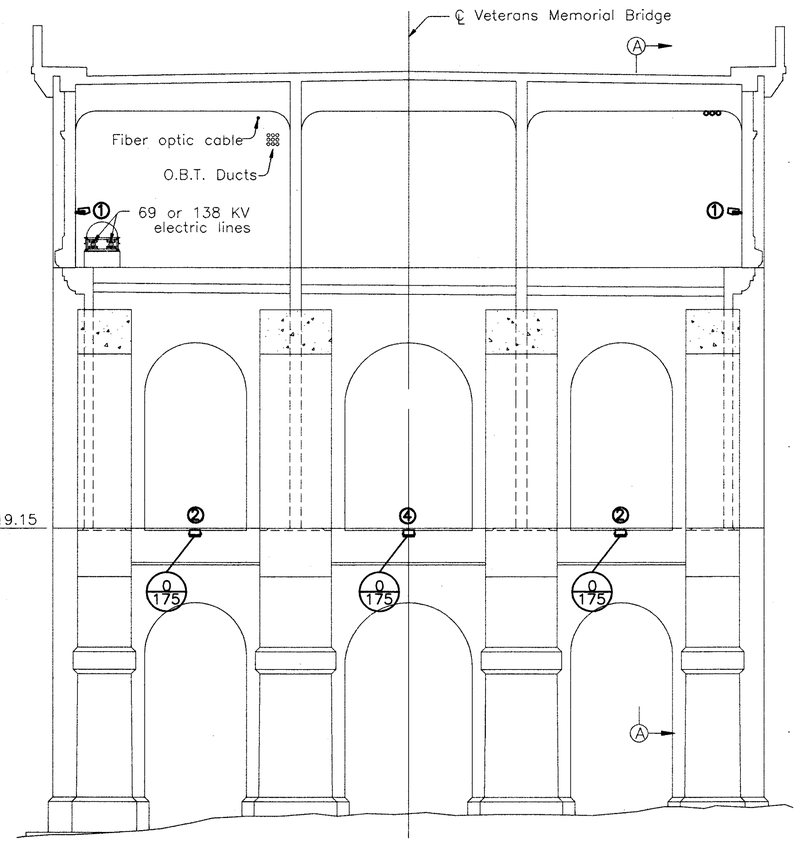

ELEVATION – PIER 8
(Looking West)
(Lower Deck, Columns and Floorbeam 8,15 not shown)
Scale: 1/8"=1'-0"

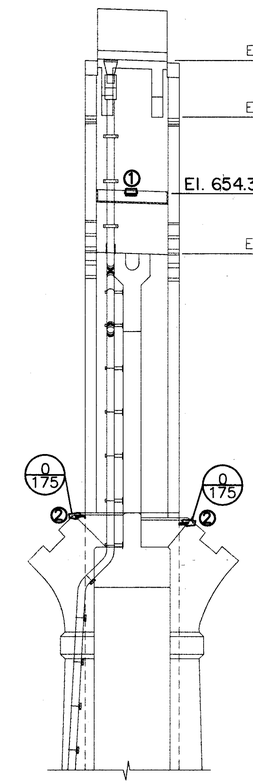

SECTION A–A
(North Bay)
(Railing not shown)
Scale: 1/8"=1'-0"

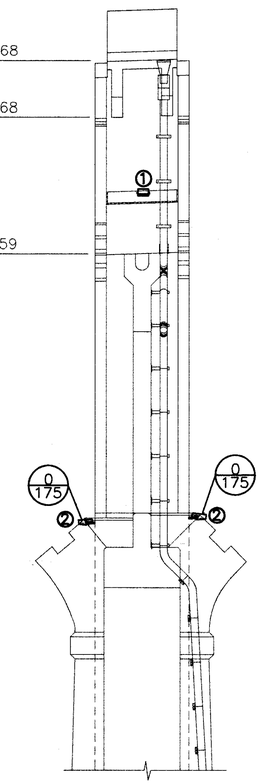

SECTION A–A
(South Bay)
(Railing not shown)
Scale: 1/8"=1'-0"

NOTES:

1. At piers with drains, mount fixtures an additional 10" out from wall.
2. Install Type 2 and 4 luminaires with wire entry away from wall. See Sheet 130.
3. For conduit, see Arch Lighting Plan Sheet 107.

HOWARD NEEDLES TAMMEN & BERGENDOFF
ARCHITECTS ENGINEERS PLANNERS HNTB

MADE BY: F.E.G. DATE: 2/21/94
DRAWN BY: P.J.K. DATE: 2/23/94
CHECKED BY: N.C.J. DATE:
SCALE: 1/8"=1'-0"

2:\01/\NB08 1=1

PIER 8 LIGHTING ELEVATIONS

FHWA REGION	STATE	PROJECT	
5	OHIO		

124R
214R

CUYAHOGA COUNTY
CUY-6-14.99

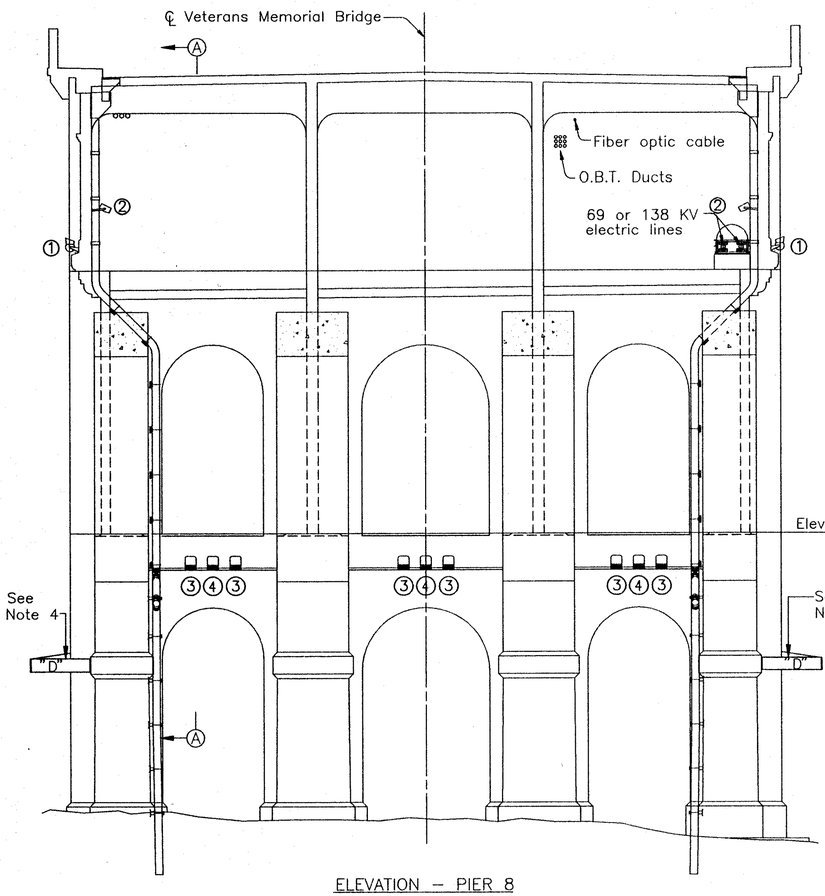

ELEVATION – PIER 8
(Looking East)
(Lower Deck, Columns and Floorbeam 8,15 not shown)
Scale: 1/8"=1'-0"

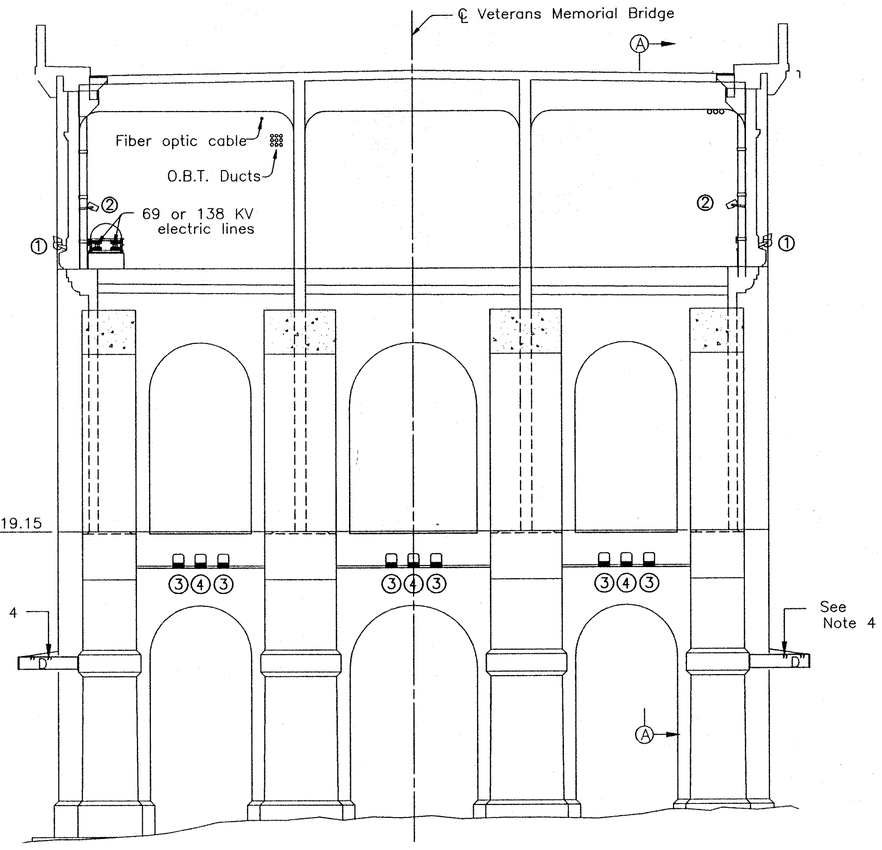

ELEVATION – PIER 8
(Looking West)
(Lower Deck, Columns and Floorbeam 8,15 not shown)
Scale: 1/8"=1'-0"

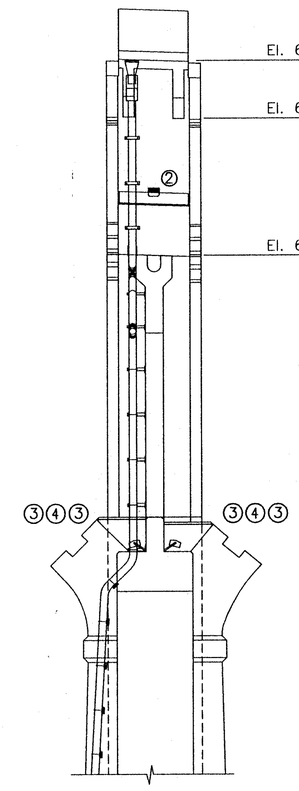

SECTION A–A
(North Bay)
(Railing not shown)
Scale: 1/8"=1'-0"

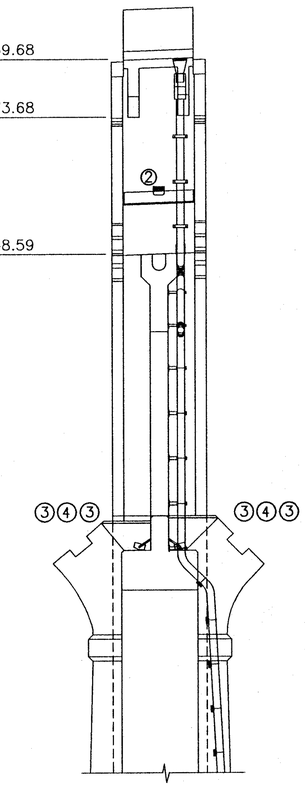

SECTION A–A
(South Bay)
(Railing not shown)
Scale: 1/8"=1'-0"

Notes:
1. For conduit, see Arch Lighting Plan Sheet 106R.
2. At piers with drains, mount fixtures an additional 10" out from wall.
3. See Pier Mounting Bracket Details Drawing 103K.
4. Mount top Edge of Bracket at El. 605.05

HOWARD NEEDLES TAMMEN & BERGENDOFF
ARCHITECTS ENGINEERS PLANNERS
HNTB

MADE BY: F.E.G. DATE: 7/17/95
DRAWN BY: L.M.L. DATE: 7/17/95
CHECKED BY: N.C.Y. DATE: 7/17/95
SCALE: 1/8"=1'-0"
PIER8

PIER 8 LIGHTING ELEVATIONS

FHWA REGION	STATE	PROJECT	
5	OHIO		

125/412

CUYAHOGA COUNTY
CUY-6-14.99

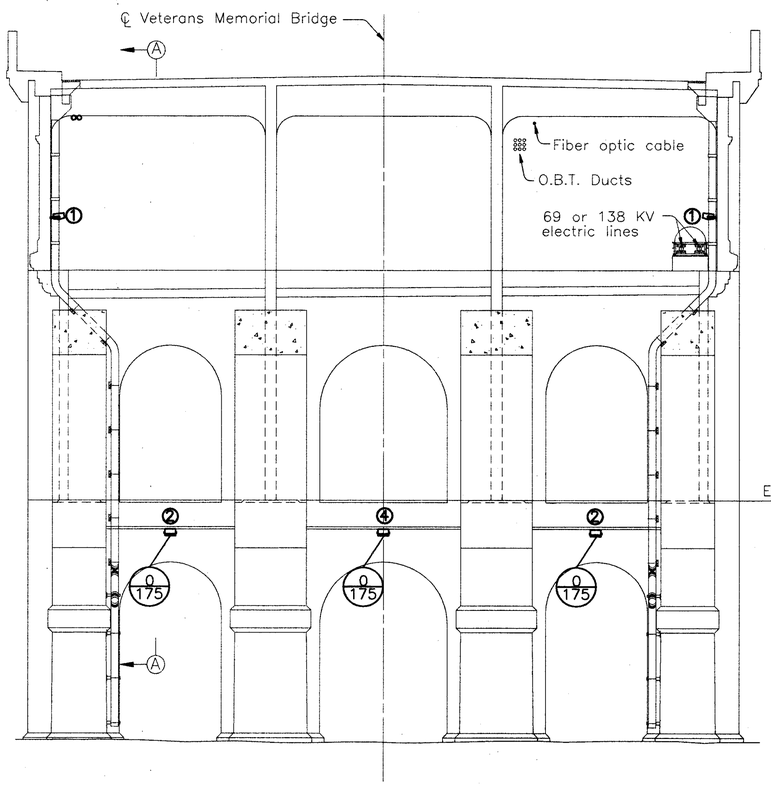

ELEVATION – PIER 9
(Looking East)
(Lower Deck, Columns and Floorbeam 9,13 not shown)
Scale: 1/8"=1'-0"

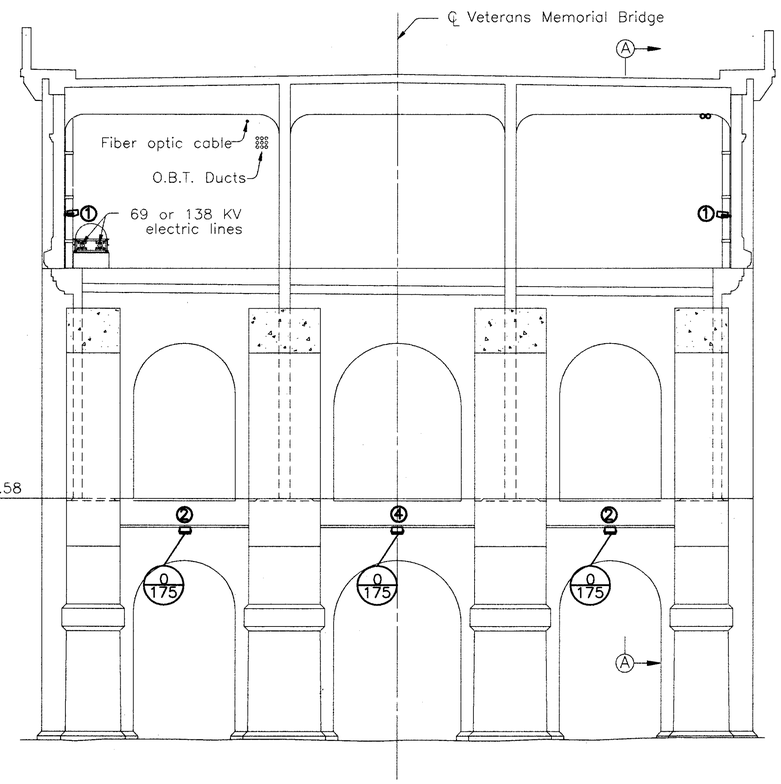

ELEVATION – PIER 9
(Looking West)
(Lower Deck, Columns and Floorbeam 9,13 not shown)
Scale: 1/8"=1'-0"

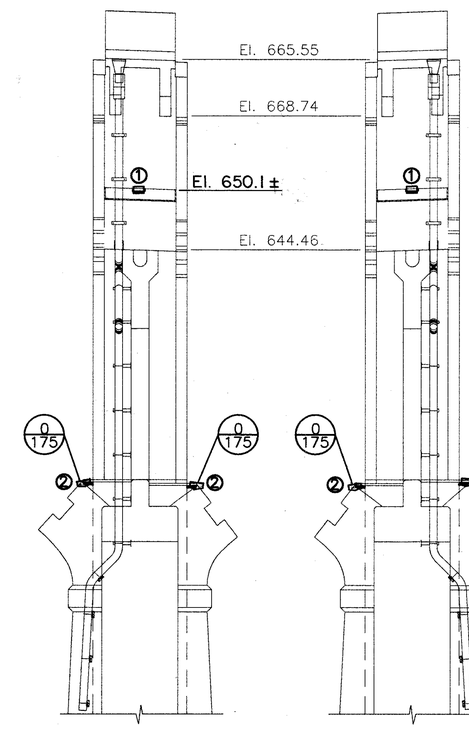

SECTION A–A
(North Bay)
(Railing not shown)
Scale: 1/8"=1'-0"

SECTION A–A
(South Bay)
(Railing not shown)
Scale: 1/8"=1'-0"

NOTES:

1. At piers with drains, mount fixtures an additional 10" out from wall.
2. Install Type 2 and 4 luminaires with wire entry away from wall. See Sheet 130.
3. For conduit, see Arch Lighting Plan Sheets 107 and 108.

HOWARD NEEDLES TAMMEN & BERGENDOFF
ARCHITECTS ENGINEERS PLANNERS HNTB

MADE BY: F.E.G. DATE: 2/21/94
DRAWN BY: P.J.K. DATE: 2/23/94
CHECKED BY: N.C.Y. DATE:
SCALE: 1/8"=1'-0"

21471/PIER9 1=1

PIER 9 LIGHTING ELEVATIONS

FHWA REGION	STATE	PROJECT	
5	OHIO		

125R
412R

CUYAHOGA COUNTY
CUY-6-14.99

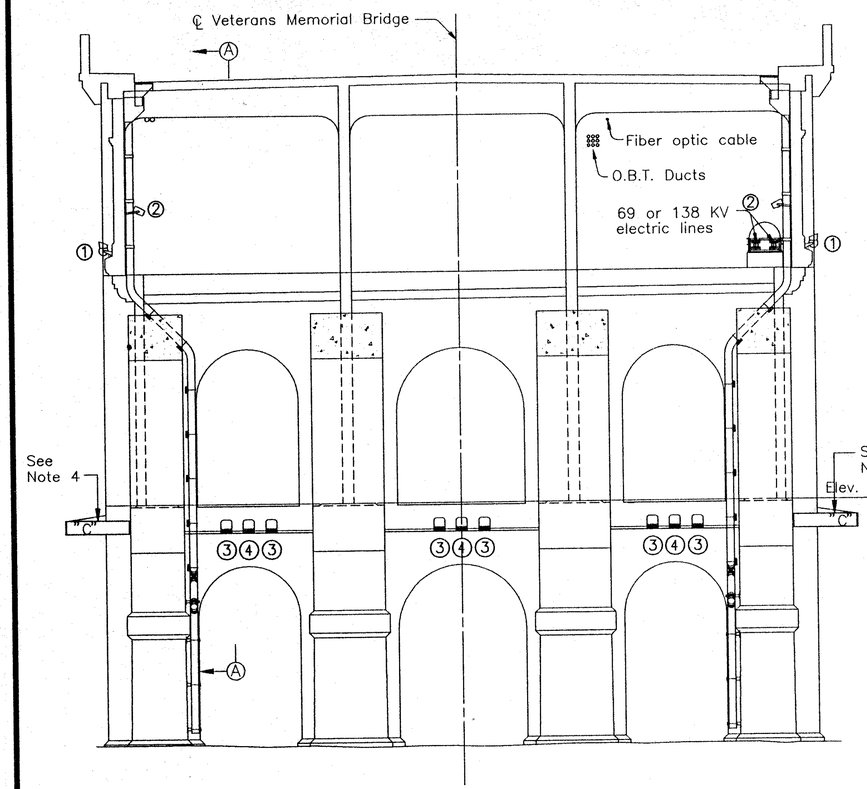

ELEVATION – PIER 9
(Looking East)
(Lower Deck, Columns and Floorbeam 9,13 not shown)
Scale: 1/8"=1'-0"

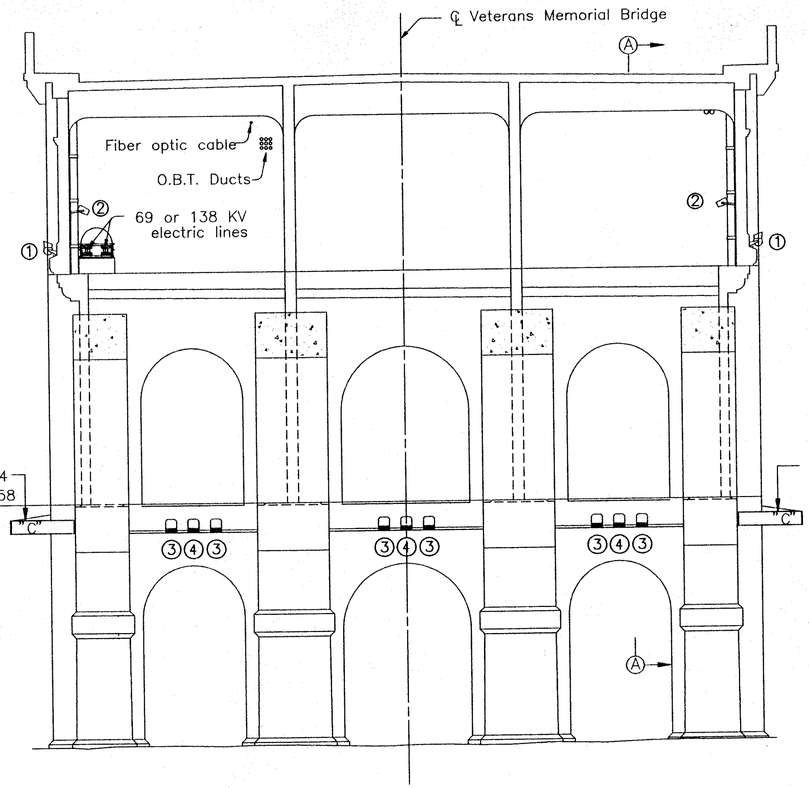

ELEVATION – PIER 9
(Looking West)
(Lower Deck, Columns and Floorbeam 9,13 not shown)
Scale: 1/8"=1'-0"

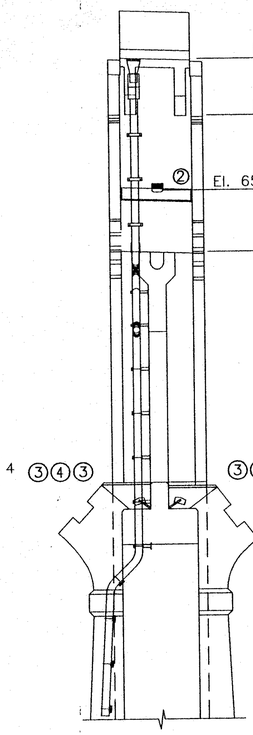

SECTION A–A
(North Bay)
(Railing not shown)
Scale: 1/8"=1'-0"

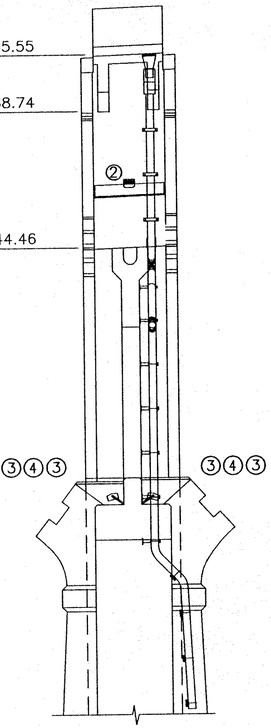

SECTION A–A
(South Bay)
(Railing not shown)
Scale: 1/8"=1'-0"

Notes:
1. For conduit, see Arch Lighting Plan Sheets 106R.
2. At piers with drains, mount fixtures an additional 10" out from wall.
3. See Pier Mounting Bracket Details Drawing 103K.
4. Mount top Edge of Bracket at El. 616.85

HOWARD NEEDLES TAMMEN & BERGENDOFF
ARCHITECTS ENGINEERS PLANNERS
HNTB

MADE BY: F.E.G. DATE: 7/17/95
DRAWN BY: L.M.L. DATE: 7/17/95
CHECKED BY: N.C.Y. DATE: 7/17/95
SCALE: 1/8"=1'-0"
PIER9

PIER 9 LIGHTING ELEVATIONS

FHWA REGION	STATE	PROJECT	
5	OHIO		

126/412

CUYAHOGA COUNTY
CUY-6-14.99

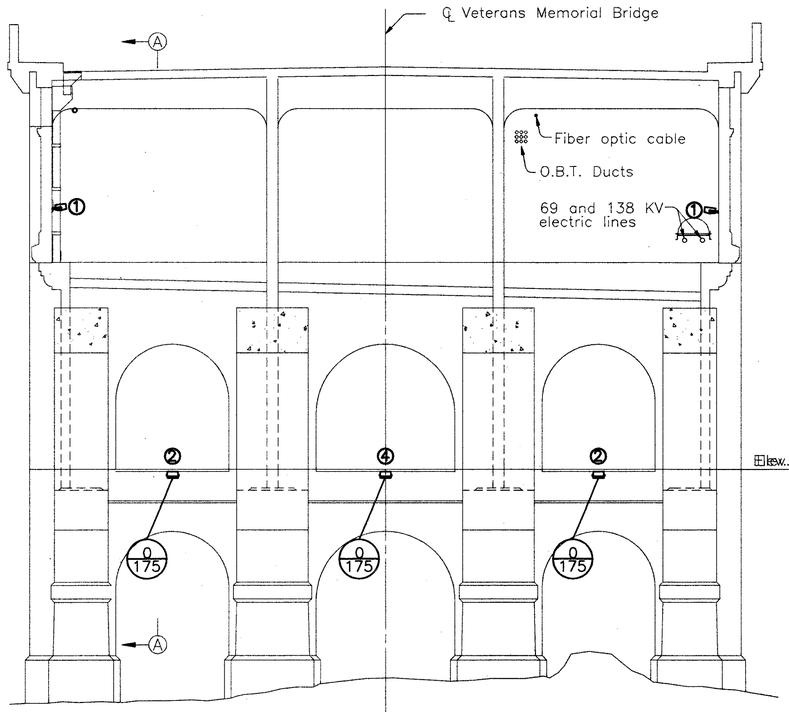

ELEVATION – PIER 10
(Looking East)
(Lower Deck, Columns and Floorbeam 10,12 not shown)
Scale: 1/8"=1'-0"

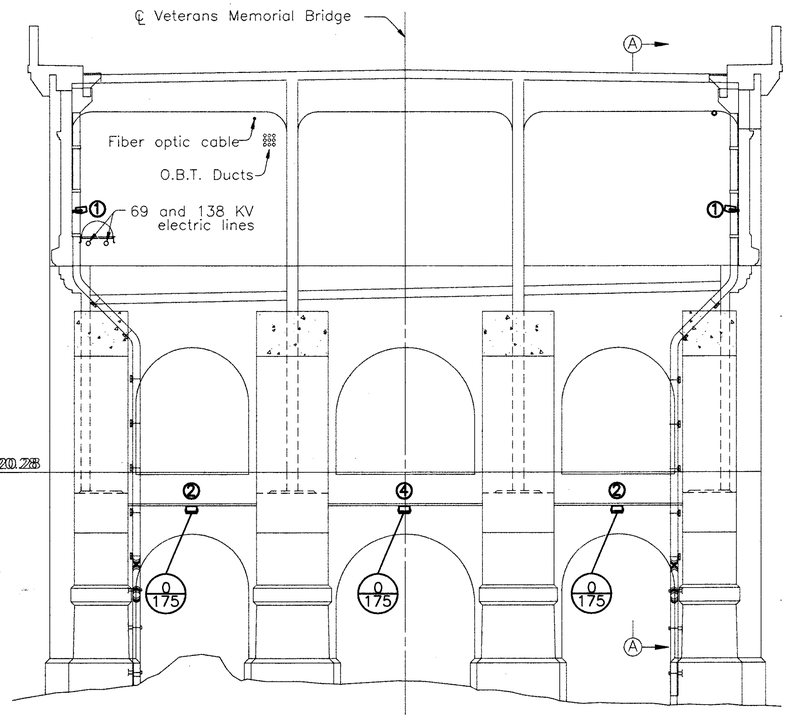

ELEVATION – PIER 10
(Looking West)
(Lower Deck, Columns and Floorbeam 10,12 not shown)
Scale: 1/8"=1'-0"

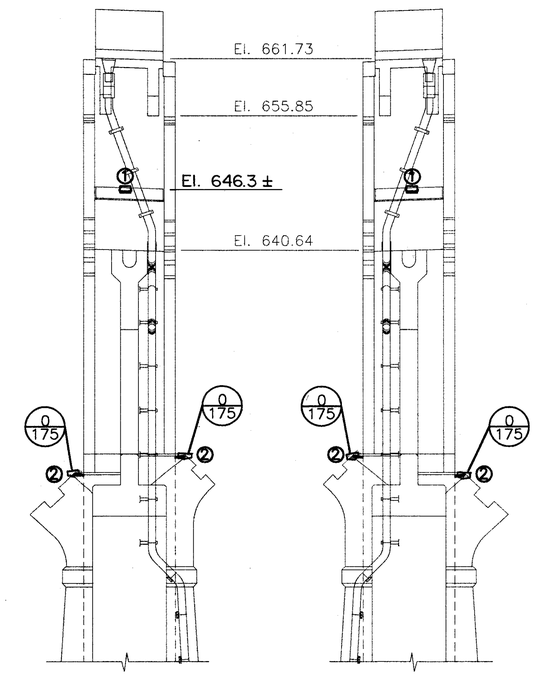

SECTION A–A
(North Bay)
(Railing not shown)
Scale: 1/8"=1'-0"

SECTION A–A
(South Bay)
(Railing not shown)
Scale: 1/8"=1'-0"

NOTES:

1. At piers with drains, mount fixtures an additional 10" out from wall.
2. Install Type 2 and 4 luminaires with wire entry away from wall. See Sheet 130.
3. For conduit, see Arch Lighting Plan Sheet 108.

HOWARD NEEDLES TAMMEN & BERGENDOFF
ARCHITECTS ENGINEERS PLANNERS HNTB

MADE BY: F.E.G. DATE: 2/21/94
DRAWN BY: P.J.K. DATE: 2/23/94
CHECKED BY: N.G.Y. DATE:
SCALE: 1/8"=1'-0"

21471/PIER10 1=1

PIER 10 LIGHTING ELEVATIONS

FHWA REGION	STATE	PROJECT	
5	OHIO		

126R
412R

CUYAHOGA COUNTY
CUY-6-14.99

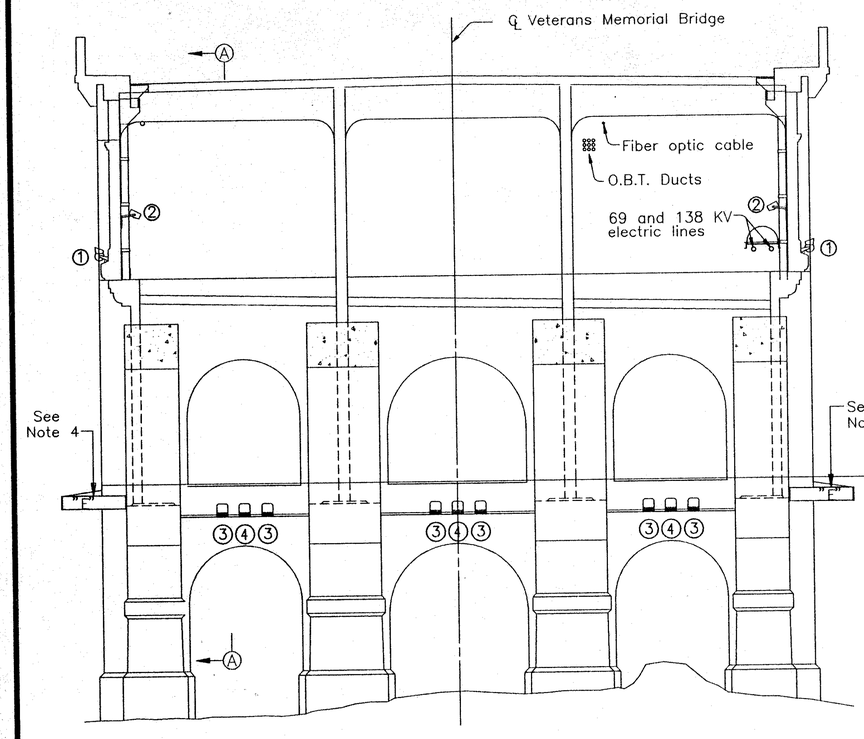

ELEVATION – PIER 10
(Looking East)
(Lower Deck, Columns and Floorbeam 10,12 not shown)
Scale: 1/8"=1'-0"

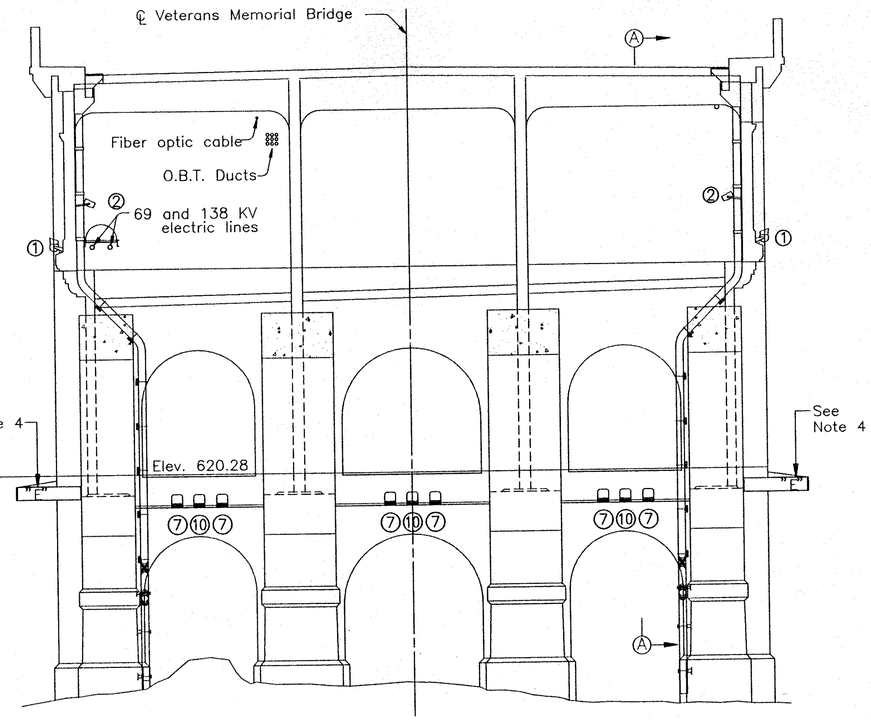

ELEVATION – PIER 10
(Looking West)
(Lower Deck, Columns and Floorbeam 10,12 not shown)
Scale: 1/8"=1'-0"

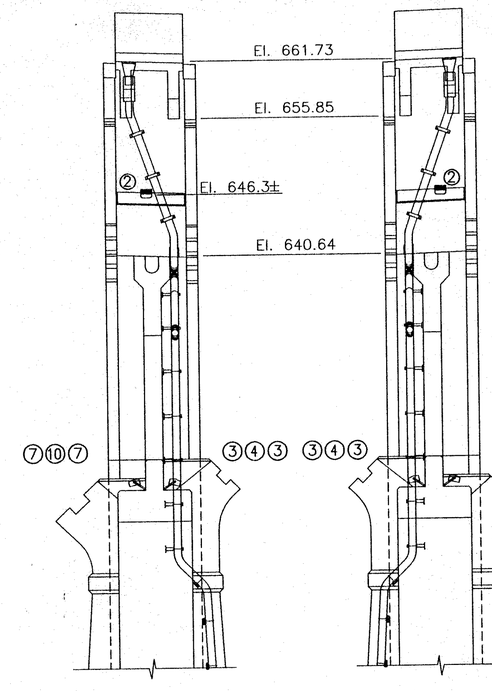

SECTION A–A
(North Bay)
(Railing not shown)
Scale: 1/8"=1'-0"

SECTION A–A
(South Bay)
(Railing not shown)
Scale: 1/8"=1'-0"

Notes:
1. For conduit, see Arch Lighting Plan Sheet 106R.
2. At piers with drains, mount fixtures an additional 10" out from wall.
3. See Pier Mounting Bracket Details Drawing 103K.
4. Mount top edge of bracket at El. 619.05

HOWARD NEEDLES TAMMEN & BERGENDOFF
ARCHITECTS ENGINEERS PLANNERS HNTB

MADE BY: F.E.G. DATE: 7/17/95
DRAWN BY: L.M.L. DATE: 7/17/95
CHECKED BY: N.C.Y. DATE: 7/17/95
SCALE: 1/8"=1'-0"
PIER10

PIER 10 LIGHTING ELEVATIONS

FHWA REGION	STATE	PROJECT	
5	OHIO		

127/412

CUYAHOGA COUNTY
CUY-6-14.99

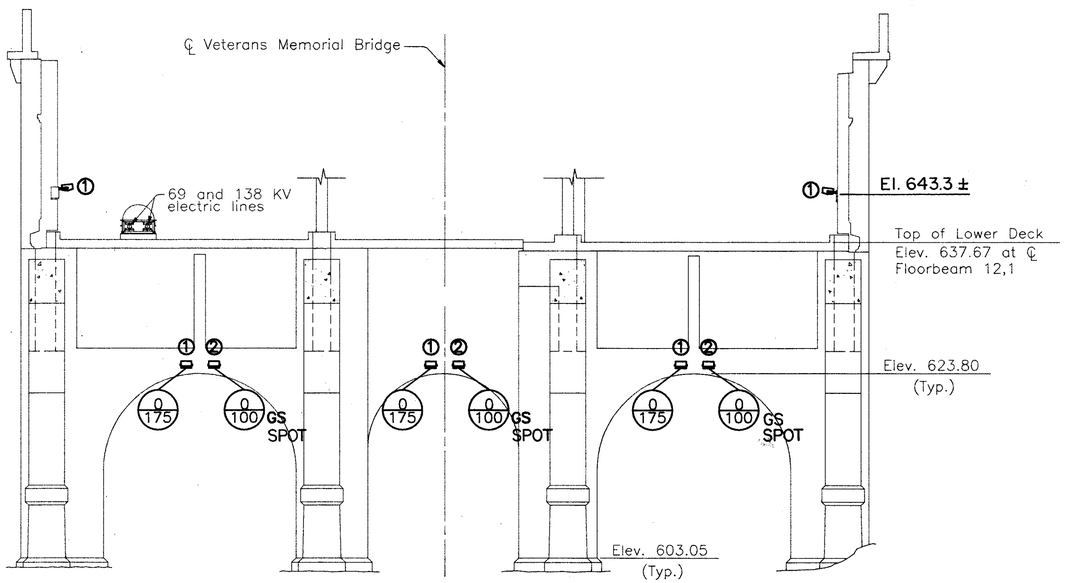

ELEVATION – PIER 11
(Looking West)
(Floorbeams 12,1 and 12,2 not shown)

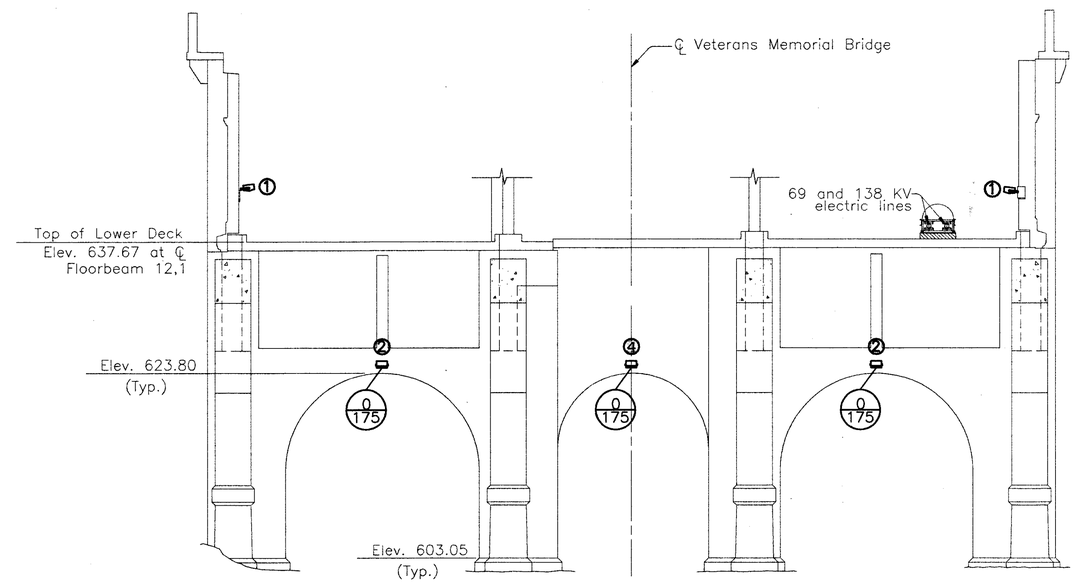

ELEVATION – PIER 11
(Looking East)
(Floorbeams 12,1 and 12,2 not shown)

NOTES:

1. At piers with drains, mount fixtures an additional 10" out from wall.
2. Install Type ② and ④ luminaires with wire entry away from wall. See Sheet 130.

   For conduit, see Arch Lighting Plan Sheets 108 and 109.

HOWARD NEEDLES TAMMEN & BERGENDOFF
ARCHITECTS ENGINEERS PLANNERS
HNTB

MADE BY: F.E.G. DATE: 2/21/94
DRAWN BY: P.J.K. DATE: 2/23/94
CHECKED BY: N.C.Y. DATE:
SCALE: 1/8"=1'-0"

21471/PIER11 1=1

PIER 11 LIGHTING ELEVATIONS

FHWA REGION	STATE	PROJECT	
5	OHIO		

127R
412R

CUYAHOGA COUNTY
CUY-6-14.99

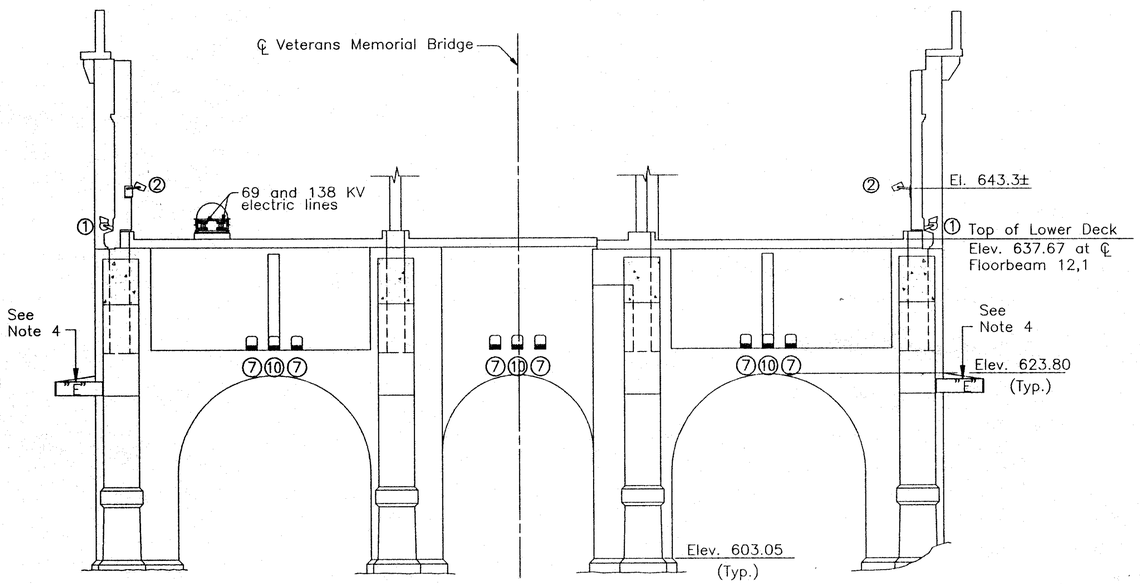

ELEVATION – PIER 11
(Looking West)
(Floorbeams 12,1 and 12,2 not shown)

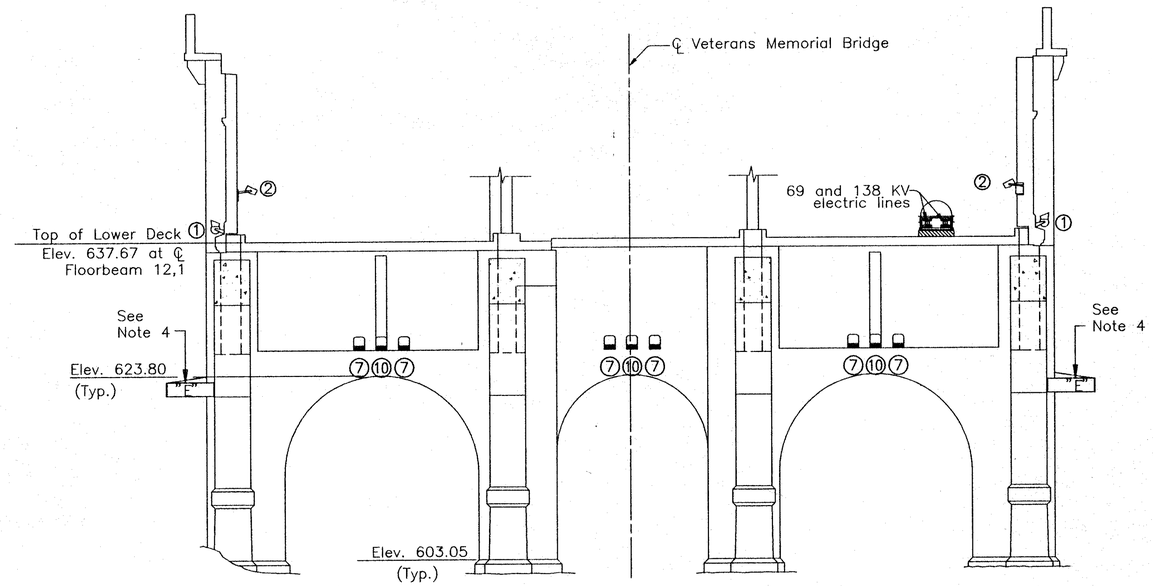

ELEVATION – PIER 11
(Looking East)
(Floorbeams 12,1 and 12,2 not shown)

Notes:
1. For conduit, see Arch Lighting Plan Sheets 106R.
2. At piers with drains, mount fixtures an additional 10" out from wall.
3. See Pier Mounting Bracket Details Drawing 103K.
4. Mount top edge of bracket at El. 622.08

HOWARD NEEDLES TAMMEN & BERGENDOFF
ARCHITECTS ENGINEERS PLANNERS
HNTB

MADE BY: F.E.G. DATE: 7/17/95
DRAWN BY: L.M.L. DATE: 7/17/95
CHECKED BY: N.C.Y. DATE: 7/17/95
SCALE: 1/8"=1'-0"
PIER11

PIER 11 LIGHTING ELEVATIONS

FHWA REGION	STATE	PROJECT	
5	OHIO		

128/412

CUYAHOGA COUNTY
CUY-6-14.99

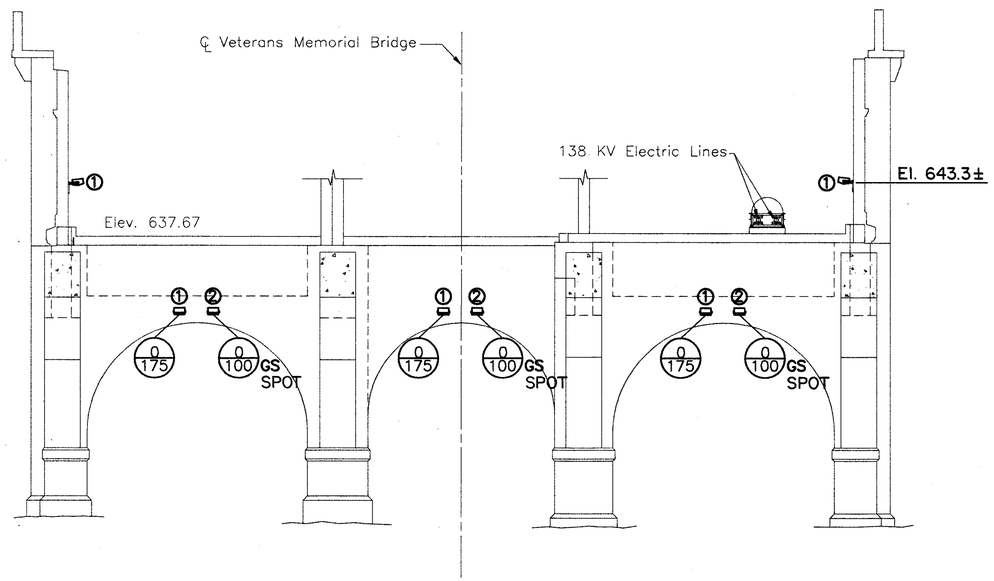

WEST ELEVATION – PIER 12
(Floorbeams 12–12 and 13–1 not shown)
Scale: 1/8"=1'-0"

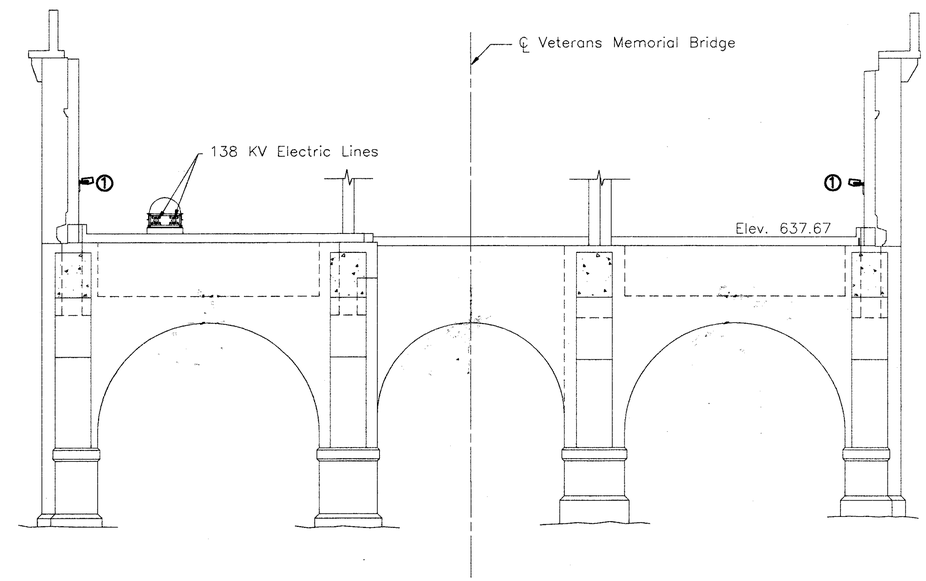

EAST ELEVATION – PIER 12
(Floorbeams 12–12 and 13–1 not shown)
Scale: 1/8"=1'-0"

NOTES:

1. At piers with drains, mount fixtures an additional 10" out from wall.
2. Install Type ② and ④ luminaires with wire entry away from wall. See Sheet 130.
3. For conduit, see Arch Lighting Plan Sheet 109.

HOWARD NEEDLES TAMMEN & BERGENDOFF
ARCHITECTS ENGINEERS PLANNERS HNTB

MADE BY: F.E.G. DATE: 2/21/94
DRAWN BY: P.J.K. DATE: 2/23/94
CHECKED BY: N.C.Y. DATE:
SCALE: 1/8"=1'-0"

21471/PIER12 1=1

PIER 12 LIGHTING ELEVATIONS

FHWA REGION	STATE	PROJECT	
5	OHIO		

128R
412R

CUYAHOGA COUNTY
CUY-6-14.99

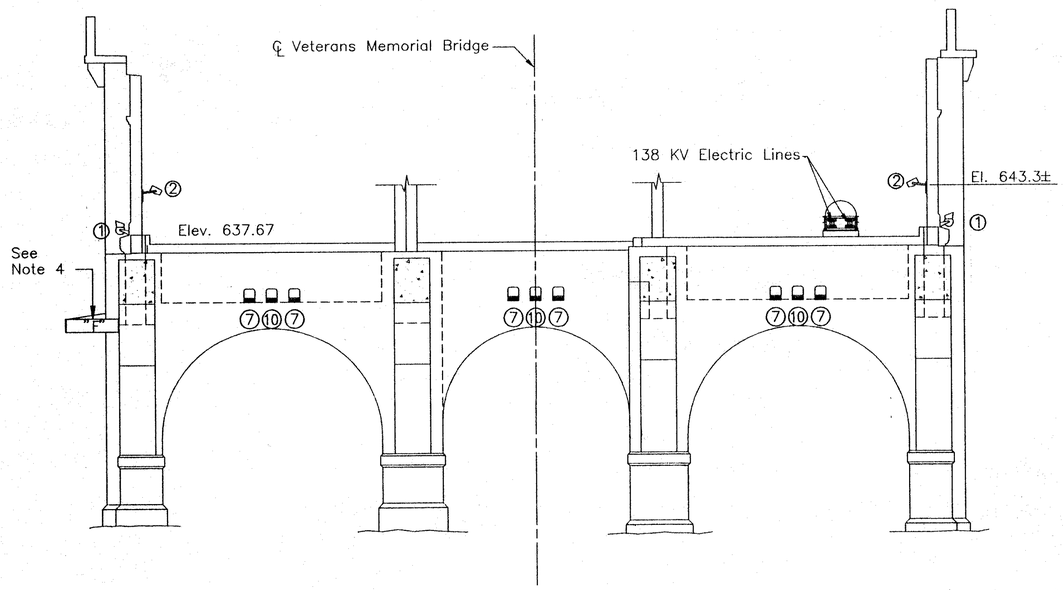

WEST ELEVATION – PIER 12
(Floorbeams 12–12 and 13–1 not shown)
Scale: 1/8"=1'-0"

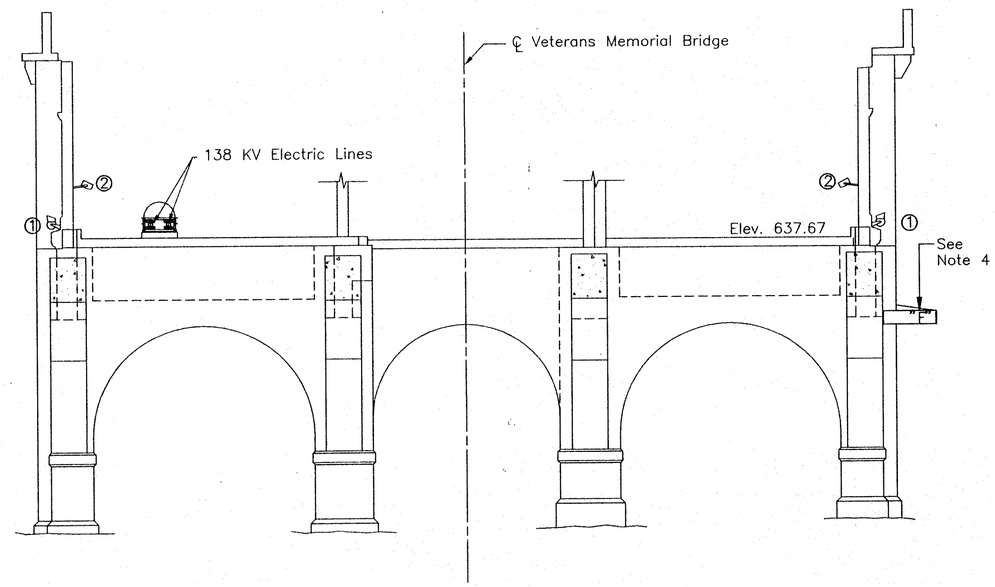

EAST ELEVATION – PIER 12
(Floorbeams 12–12 and 13–1 not shown)
Scale: 1/8"=1'-0"

Note:
For conduit, see Arch Lighting Plan Sheet 106R.
2. At piers with drains, mount fixtures an additional 10" out from wall.
3. See Pier Mounting Bracket Details Drawing 103K.
4. Mount top edge of bracket at El. 625.05

HOWARD NEEDLES TAMMEN & BERGENDOFF
ARCHITECTS ENGINEERS PLANNERS
HNTB

MADE BY: F.E.G. DATE: 7/17/95
DRAWN BY: L.M.L. DATE: 7/17/95
CHECKED BY: N.C.T. DATE: 7/17/95
SCALE: 1/8"=1'-0"
PIER12

PIER 12 LIGHTING ELEVATIONS

FHWA REGION	STATE	PROJECT	
5	OHIO		

129/412

CUYAHOGA COUNTY
CUY-6-14.99

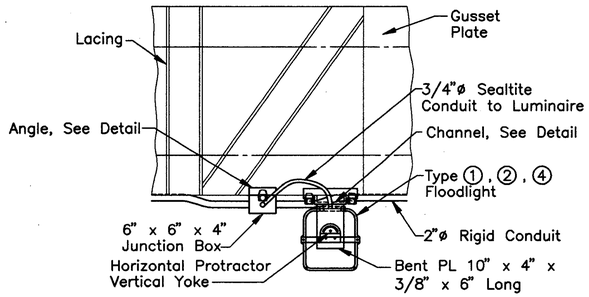

PLAN

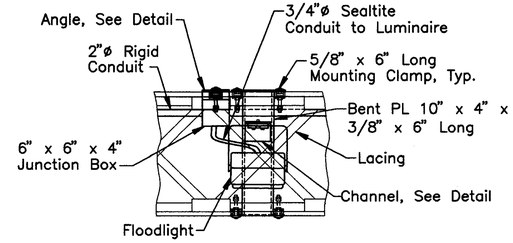

FRONT

MOUNTED ON WIND BRACE

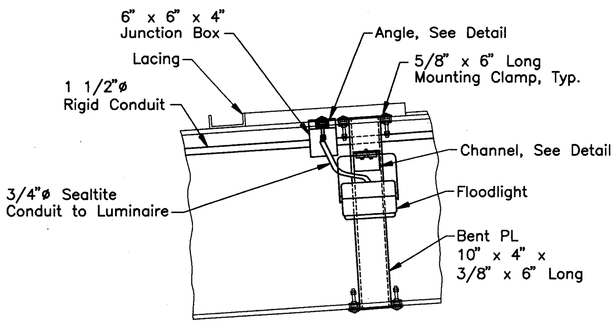

FRONT

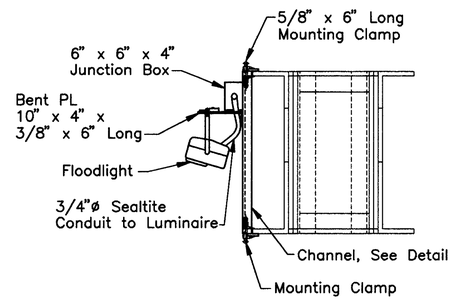

SIDE

MOUNTED ON UPPER CHORD

MOUNTING STYLE 1 (MS1)
(Mounting at Lower Chord Similar)
(Rivets Not Shown)
Scale: 3/4"=1'-0"

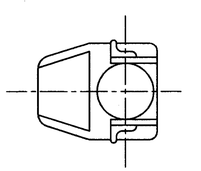

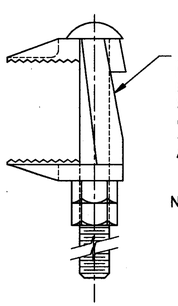

Note:
A similar type clamp may be used for mounting junction box.

LUMINAIRE BRACKET MOUNTING CLAMP
Not to Scale

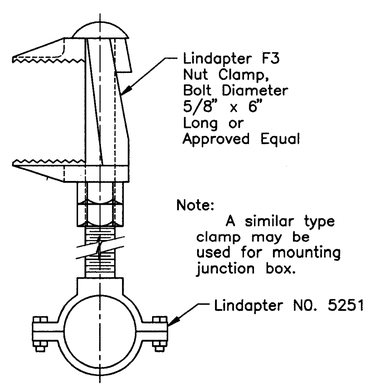

Note:
A similar type clamp may be used for mounting junction box.

CONDUIT MOUNTING CLAMP
Not to Scale

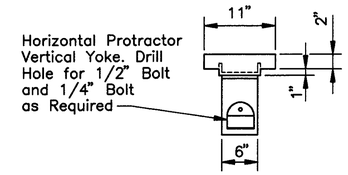

Note:
Paint to match steel.

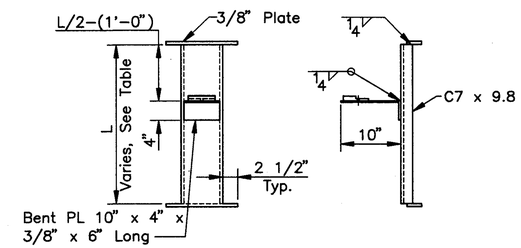

CHANNEL DETAIL
MOUNTING STYLE 1 (MS1)
Not to Scale

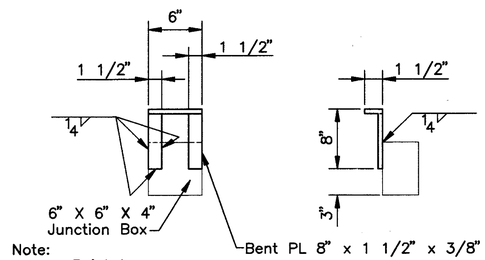

Note:
Paint to match steel.

ANGLE DETAIL
MOUNTING STYLE 1 (MS1)
Not to Scale

CHANNEL TABLE

MOUNTING STYLE 1		MOUNTING STYLE 1		MOUNTING STYLE 1	
LOCATION	L	LOCATION	L	LOCATION	L
U0U2	2'-5 3/4"	L5L6	3'-6 3/4"	AB14	2'-3 1/4"
U2U4	2'-4 1/4"	L6L7	3'-6 3/4"	AB16	2'-3 1/4"
U4U5	2'-4 1/4"	L7L8	3'-6 3/4"	AB18	2'-3 1/4"
U5U6	2'-4 1/4"	L9L10	3'-6 3/4"	AB21	2'-3 1/4"
U6U7	2'-4 1/4"	L10L11	3'-6 3/4"	AB22	3'-5 1/4"
U7U8	2'-4 1/4"	L11L12	3'-6 3/4"	AB26	3'-5 1/4"
U8U9	2'-4 1/4"	PORTAL:	——	AB30	3'-5 1/4"
U9U10	2'-4 1/4"	U2U2 (TOP)	1'-0 1/4"	AB34	3'-5 1/4"
U10U11	2'-4 1/4"	U2U2 (BOT.)	1'-0 1/4"	AB35	3'-5 1/4"
U11U12	2'-4 1/4"	AB2	2'-3 1/4"	AB37	3'-5 1/4"
L0L1	3'-6 3/4"	AB4	2'-3 1/4"	AB39	3'-5 1/4"
L1L2	3'-6 3/4"	AB6	2'-3 1/4"	AB41	3'-5 1/4"
L2L3	3'-6 3/4"	AB8	2'-4 1/4"	AB43	3'-5 1/4"
L3L4	3'-6 3/4"	AB10	2'-3 1/4"	AB104	3'-5 1/4"
L4L5	3'-6 3/4"	AB12	2'-3 1/4"		

Note:
All mounting hardware to be hot dipped galvanized A36 steel unless otherwise specified.

HOWARD NEEDLES TAMMEN & BERGENDOFF
ARCHITECTS ENGINEERS PLANNERS HNTB

MADE BY: P.J.K. DATE: 4/18/94
DRAWN BY: P.J.K. DATE: 4/20/94
CHECKED BY: N.C.Y. DATE:
SCALE: As Shown

21471/ATMTS4 1=1

LUMINAIRE MOUNTING DETAILS

FHWA REGION	STATE	PROJECT	
5	OHIO		

130/412

CUYAHOGA COUNTY
CUY-6-14.99

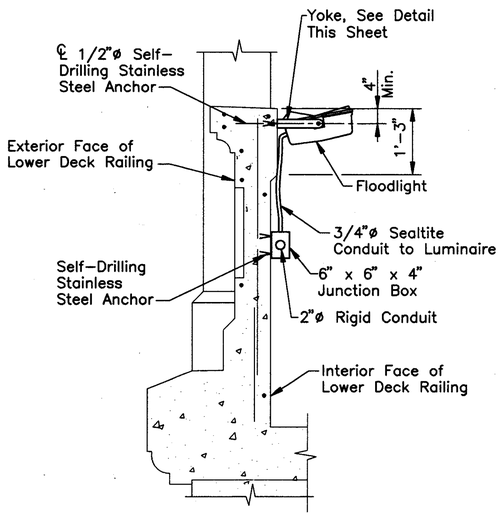

LOWER DECK RAILING

SECTION B/101

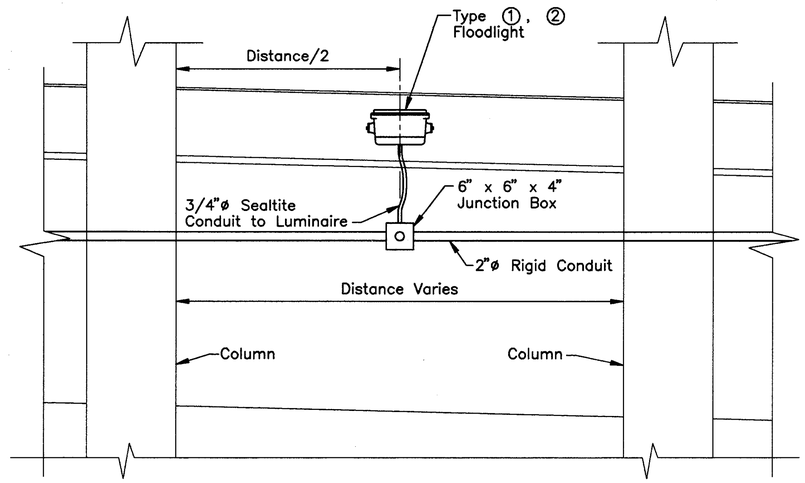

ELEVATION-INTERIOR FACE OF LOWER DECK RAILING

LUMINAIRE MOUNTED ON CONCRETE

Scale: 3/4" = 1'-0"

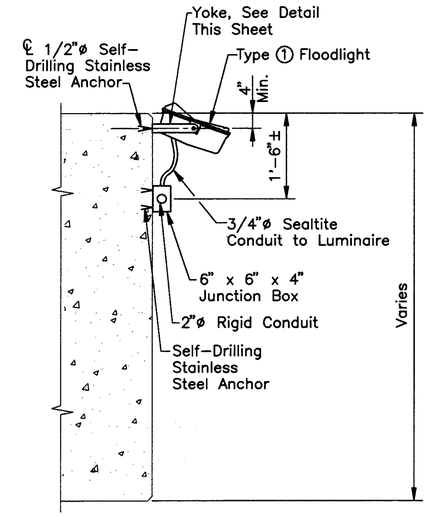

TYPE ① FLOODLIGHT

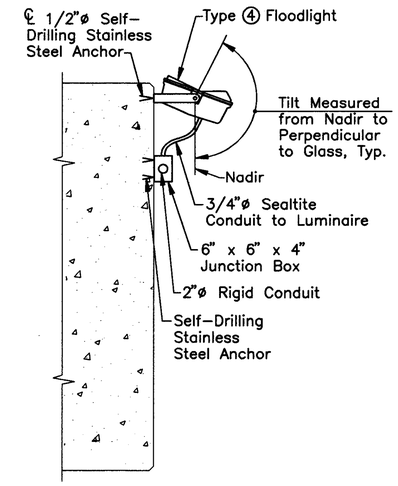

TYPE ④ FLOODLIGHT

SECTION THRU TYPICAL LOWER ARCH

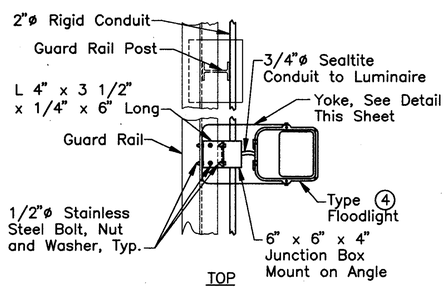

TOP

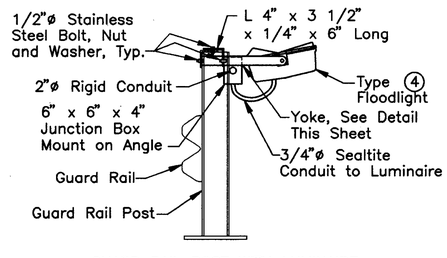

GUARD RAIL POST WITH LUMINAIRE

LUMINIAIRE MOUNTED ON LOWER DECK GUARD RAIL

Scale: 3/4" = 1'-0"

Note:
All mounting hardware to be hot dipped galvanized A36 steel unless otherwise specified.

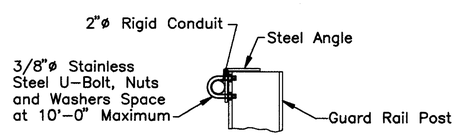

CONDUIT MOUNTING ON GUARD RAIL

Scale: 3/8" = 1'-0"

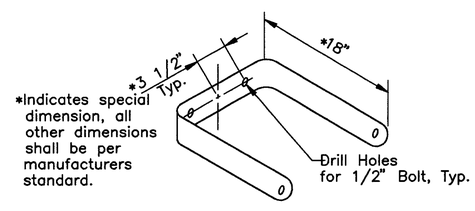

FOR MOUNTING ON GUARD RAIL ANGLE

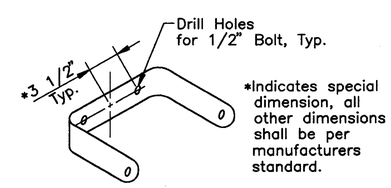

FOR MOUNTING ON CONCRETE

YOKE DETAIL

Not to Scale

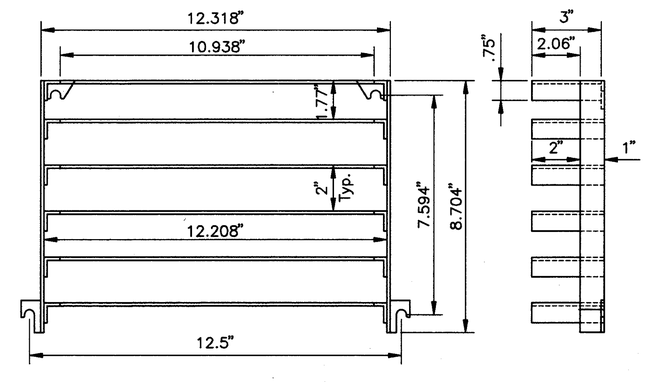

GLARE SHIELD

Not to Scale

NOTE: Dimensions shown may vary as required for this project.

HOWARD NEEDLES TAMMEN & BERGENDOFF
ARCHITECTS ENGINEERS PLANNERS HNTB

MADE BY: P.J.K. DATE: 5/2/94
DRAWN BY: P.J.K. DATE: 5/4/94
CHECKED BY: N.C.Y. DATE:
SCALE: As Shown

21471/LTMTSP4 1=1

LUMINAIRE MOUNTING DETAILS

FHWA REGION	STATE	PROJECT	
5	OHIO		

130A
412

CUYAHOGA COUNTY
CUY-6-14.99

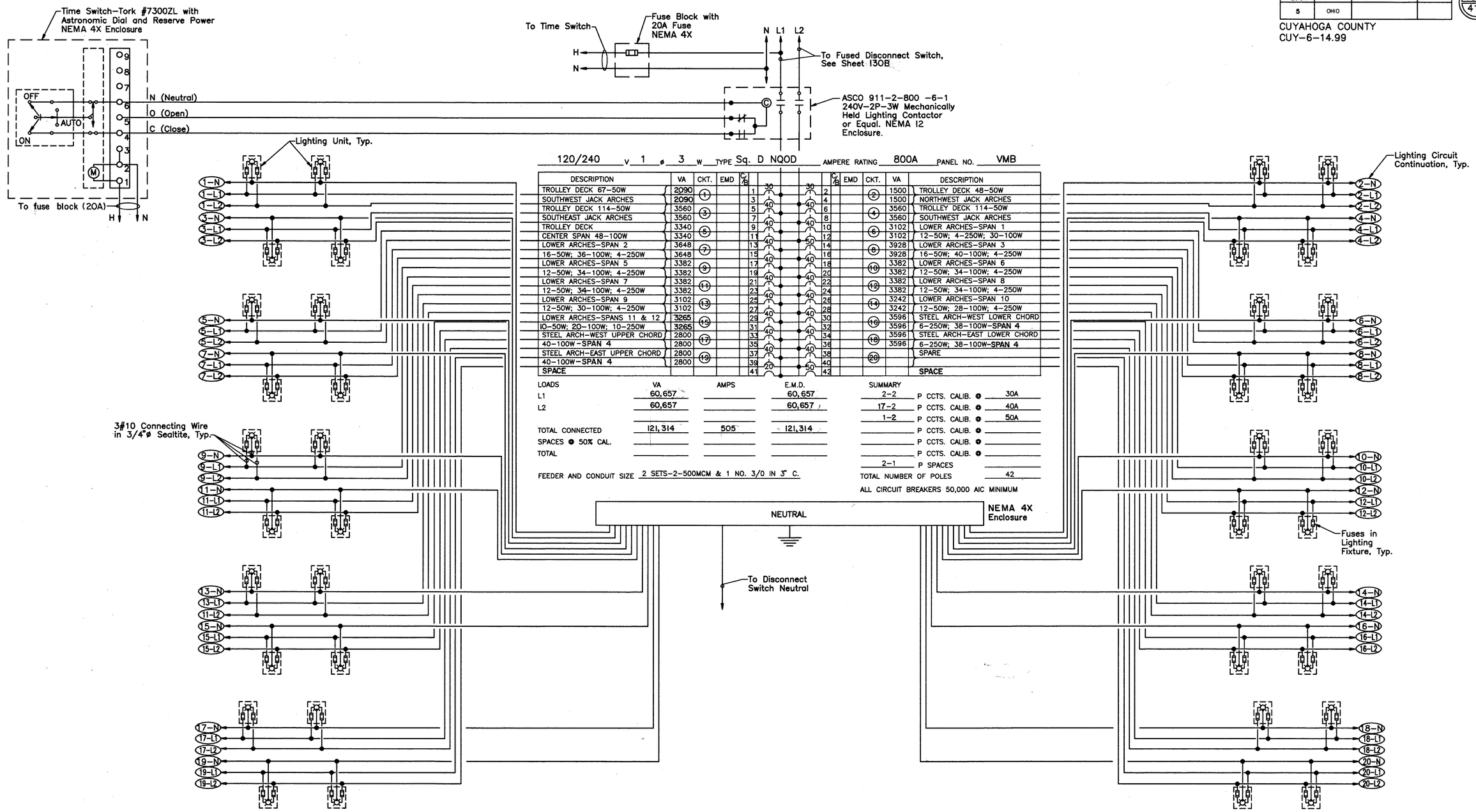

120/240 V 1 ø 3 W TYPE Sq. D NQOD AMPERE RATING 800A PANEL NO. VMB

DESCRIPTION	VA	CKT.	EMD	C/B				C/B	EMD	CKT.	VA	DESCRIPTION
TROLLEY DECK 67-50W	2090	1		1	30		30	2		2	1500	TROLLEY DECK 48-50W
SOUTHWEST JACK ARCHES	2090			3		40		4			1500	NORTHWEST JACK ARCHES
TROLLEY DECK 114-50W	3560	3		5			40	6		4	3560	TROLLEY DECK 114-50W
SOUTHEAST JACK ARCHES	3560			7		40		8			3560	SOUTHWEST JACK ARCHES
TROLLEY DECK	3340	5		9			40	10		6	3102	LOWER ARCHES-SPAN 1
CENTER SPAN 48-100W	3340			11		40		12			3102	12-50W; 4-250W; 30-100W
LOWER ARCHES-SPAN 2	3648	7		13			50	14		8	3928	LOWER ARCHES-SPAN 3
16-50W; 36-100W; 4-250W	3648			15		40		16			3928	16-50W; 40-100W; 4-250W
LOWER ARCHES-SPAN 5	3382	9		17			40	18		10	3382	LOWER ARCHES-SPAN 6
12-50W; 34-100W; 4-250W	3382			19		40		20			3382	12-50W; 34-100W; 4-250W
LOWER ARCHES-SPAN 7	3382	11		21			40	22		12	3382	LOWER ARCHES-SPAN 8
12-50W; 34-100W; 4-250W	3382			23		40		24			3382	12-50W; 34-100W; 4-250W
LOWER ARCHES-SPAN 9	3102	13		25			40	26		14	3242	LOWER ARCHES-SPAN 10
12-50W; 30-100W; 4-250W	3102			27		40		28			3242	12-50W; 28-100W; 4-250W
LOWER ARCHES-SPANS 11 & 12	3265	15		29			40	30		16	3596	STEEL ARCH-WEST LOWER CHORD
10-50W; 20-100W; 10-250W	3265			31		40		32			3596	6-250W; 38-100W-SPAN 4
STEEL ARCH-WEST UPPER CHORD	2800	17		33			40	34		18	3596	STEEL ARCH-EAST LOWER CHORD
40-100W-SPAN 4	2800			35		40		36			3596	6-250W; 38-100W-SPAN 4
STEEL ARCH-EAST UPPER CHORD	2800	19		37			40	38		20		SPARE
40-100W-SPAN 4	2800			39		20		40				
SPACE				41			50	42				SPACE

LOADS	VA	AMPS	E.M.D.
L1	60,657		60,657
L2	60,657		60,657
TOTAL CONNECTED	121,314	505	121,314
SPACES @ 50% CAL.			
TOTAL			

FEEDER AND CONDUIT SIZE 2 SETS-2-500MCM & 1 NO. 3/0 IN 3" C.

SUMMARY

2-2	P CCTS. CALIB. @	30A
17-2	P CCTS. CALIB. @	40A
1-2	P CCTS. CALIB. @	50A
	P CCTS. CALIB. @	
	P CCTS. CALIB. @	
	P CCTS. CALIB. @	
2-1	P SPACES	

TOTAL NUMBER OF POLES 42

ALL CIRCUIT BREAKERS 50,000 AIC MINIMUM

HOWARD NEEDLES TAMMEN & BERGENDOFF
ARCHITECTS ENGINEERS PLANNERS
HNTB

MADE BY: F.E.G. DATE: 5/25/94
DRAWN BY: P.J.K. DATE: 5/26/94
CHECKED BY: N.C.Y. DATE:
SCALE: As Shown

21471/DETAIL 1=1

DECORATIVE LIGHTING WIRING DIAGRAM

FHWA REGION	STATE	PROJECT	
5	OHIO		

130A
412AR

CUYAHOGA COUNTY
CUY-6-14.99

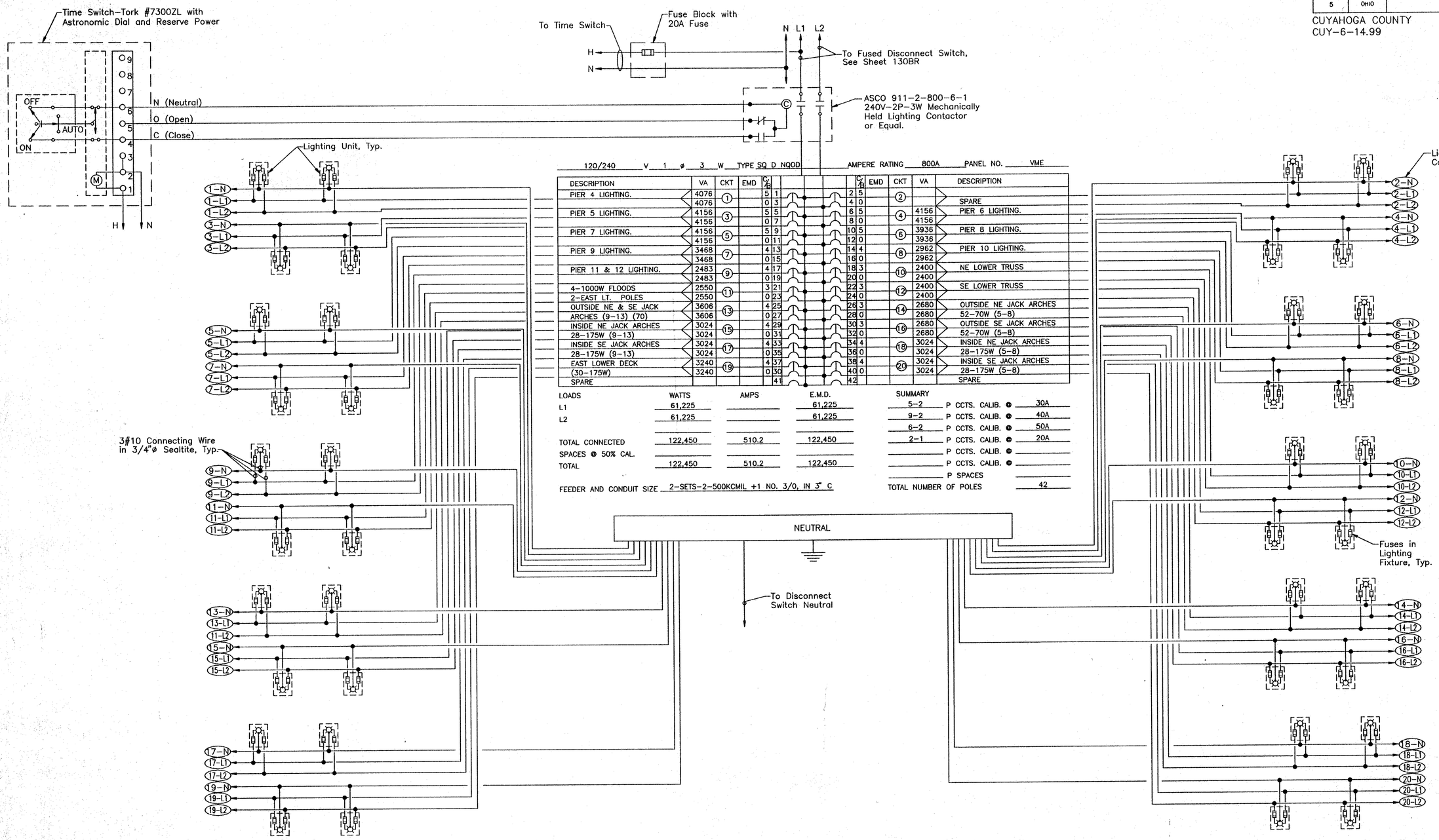

120/240 V 1 ø 3 W TYPE SQ D NQOD AMPERE RATING 800A PANEL NO. VME

DESCRIPTION	VA	CKT	EMD	C/B					C/B	EMD	CKT	VA	DESCRIPTION
PIER 4 LIGHTING.	4076	1		5	1				2 5		2		
	4076			0	3				4 0				SPARE
PIER 5 LIGHTING.	4156	3		5	5				6 5		4	4156	PIER 6 LIGHTING.
	4156			0	7				8 0			4156	
PIER 7 LIGHTING.	4156	5		5	9				10 5		6	3936	PIER 8 LIGHTING.
	4156			0	11				12 0			3936	
PIER 9 LIGHTING.	3468	7		4	13				14 4		8	2962	PIER 10 LIGHTING.
	3468			0	15				16 0			2962	
PIER 11 & 12 LIGHTING.	2483	9		4	17				18 3		10	2400	NE LOWER TRUSS
	2483			0	19				20 0			2400	
4-1000W FLOODS	2550	11		3	21				22 3		12	2400	SE LOWER TRUSS
2-EAST LT. POLES	2550			0	23				24 0			2400	
OUTSIDE NE & SE JACK	3606	13		4	25				26 3		14	2680	OUTSIDE NE JACK ARCHES
ARCHES (9-13) (70)	3606			0	27				28 0			2680	52-70W (5-8)
INSIDE NE JACK ARCHES	3024	15		4	29				30 3		16	2680	OUTSIDE SE JACK ARCHES
28-175W (9-13)	3024			0	31				32 0			2680	52-70W (5-8)
INSIDE SE JACK ARCHES	3024	17		4	33				34 4		18	3024	INSIDE NE JACK ARCHES
28-175W (9-13)	3024			0	35				36 0			3024	28-175W (5-8)
EAST LOWER DECK	3240	19		4	37				38 4		20	3024	INSIDE SE JACK ARCHES
(30-175W)	3240			0	30				40 0			3024	28-175W (5-8)
SPARE					41				42				SPARE

LOADS	WATTS	AMPS	E.M.D.
L1	61,225		61,225
L2	61,225		61,225
TOTAL CONNECTED	122,450	510.2	122,450
SPACES @ 50% CAL.			
TOTAL	122,450	510.2	122,450

FEEDER AND CONDUIT SIZE 2-SETS-2-500KCMIL +1 NO. 3/0, IN 3" C

SUMMARY		
5-2	P CCTS. CALIB. @	30A
9-2	P CCTS. CALIB. @	40A
6-2	P CCTS. CALIB. @	50A
2-1	P CCTS. CALIB. @	20A
	P CCTS. CALIB. @	
	P CCTS. CALIB. @	
	P SPACES	
TOTAL NUMBER OF POLES		42

HOWARD NEEDLES TAMMEN & BERGENDOFF
ARCHITECTS ENGINEERS PLANNERS HNTB

MADE BY: F.E.G. DATE 07/17/95
DRAWN BY: P.J.K. DATE 07/17/95
CHECKED BY: N.C.Y. DATE 07/17/95
SCALE: As Shown

2147/DETAIL 1=1

EAST END DECORATIVE LIGHTING WIRING DIAGRAM

FHWA REGION	STATE	PROJECT	
5	OHIO		

130B
412

CUYAHOGA COUNTY
CUY-6-14.99

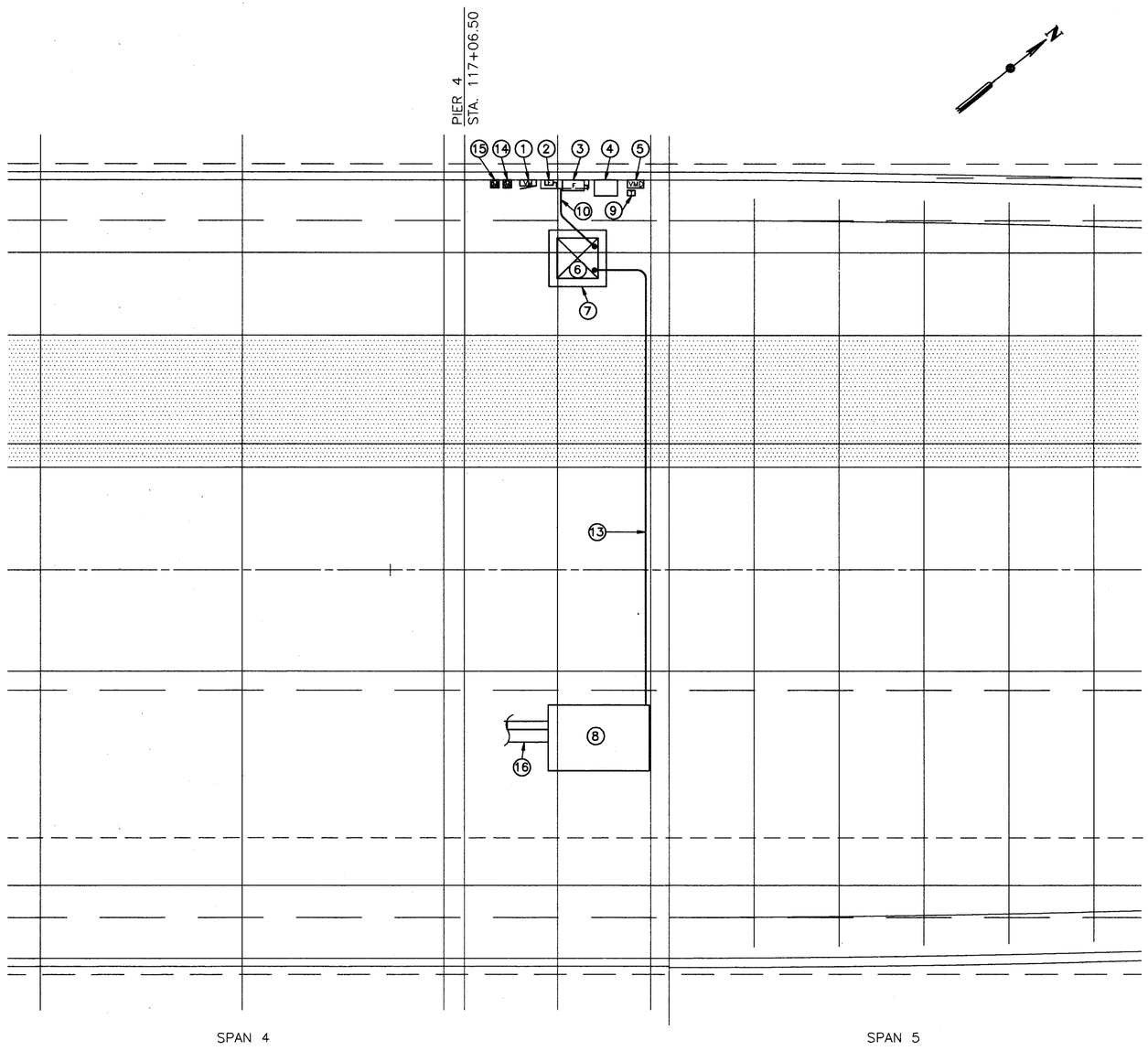

LIGHTING EQUIPMENT PLAN
Scale: 1/8" = 1'-0"

KEYED NOTES

1. "VM" VETERAN'S MEMORIAL BRIDGE ROADWAY LIGHTING CONTROL CENTER. SEE SHEET 95 "LIGHTING DETAILS".
2. 240V-200A-3P FUSED DISCONNECT SWITCH-NEMA 4X ENCLOSURE.
3. 240V-800A-2P-3W FUSED DISCONNECT SWITCH-NEMA 12 ENCLOSURE.
4. 240V-800A-2P MECHANICALLY HELD LIGHTING CONTACTOR, ASCO 911-2-800-6-1 OR EQUAL. NEMA 4X ENCLOSURE.
5. "VMD" VETERAN'S MEMORIAL BRIDGE DECORATIVE LIGHTING POWER DISTRIBUTION PANEL. 240V-2P-3W-800A. SEE PANEL SCHEDULE ON SHEET 130A FOR DETAILS.
6. PAD MOUNTED SERVICE TRANSFORMER BY CPP.
7. SUPPORT STRUCTURE FOR TRANSFORMER TO MAINTAIN TRANSFORMER 4'-0" ABOVE LOWER DECK.
8. CPP PULLING CHAMBER. SEE DETAILS ON SHEETS 130C THRU 130J.
9. TIME SWITCH, SEE SHEET 130A FOR DETAILS.
10. 2-SETS OF 2-500MCM (XHHW CU) AND 1 #3/0 IN 3" CONDUIT.
11. 12" X 12" X 6' WIREWAY NEMA 4X.
12. 3 #3/0, 2" C.
13. 2-5" PRIMARY DUCTS-GRC.
14. METERING FOR DECORATIVE LIGHTING PER CPP STANDARDS.
15. METERING FOR ROADWAY LIGHTING PER CPP STANDARDS.
16. CPP PRIMARY DUCT BANK (11KV). SEE DETAILS ON SHEETS 130C THRU 130J.
17. #4/0 COPPER GROUND IN 2" GRC - CONNECT TO BRIDGE GROUND SYSTEM.

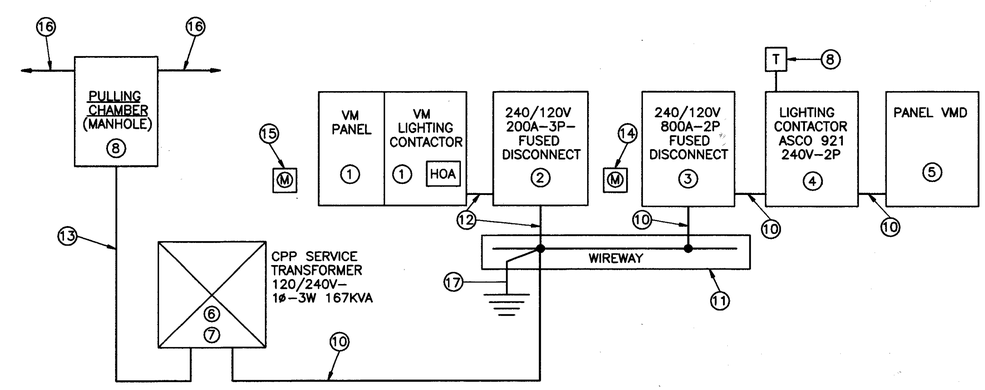

SINGLE LINE DIAGRAM
Not to Scale

LEGEND
OPEN TO BELOW

HOWARD NEEDLES TAMMEN & BERGENDOFF
ARCHITECTS ENGINEERS PLANNERS HNTB

MADE BY: F.E.G. DATE: 5/9/94
DRAWN BY: P.J.K. DATE: 5/10/94
CHECKED BY: N.C.Y. DATE:
SCALE: As Shown

21471/EQUIP 1=1

DECORATIVE LIGHTING EQUIPMENT PLAN

FHWA REGION	STATE	PROJECT	
5	OHIO		

130BR
412R

CUYAHOGA COUNTY
CUY-6-14.99

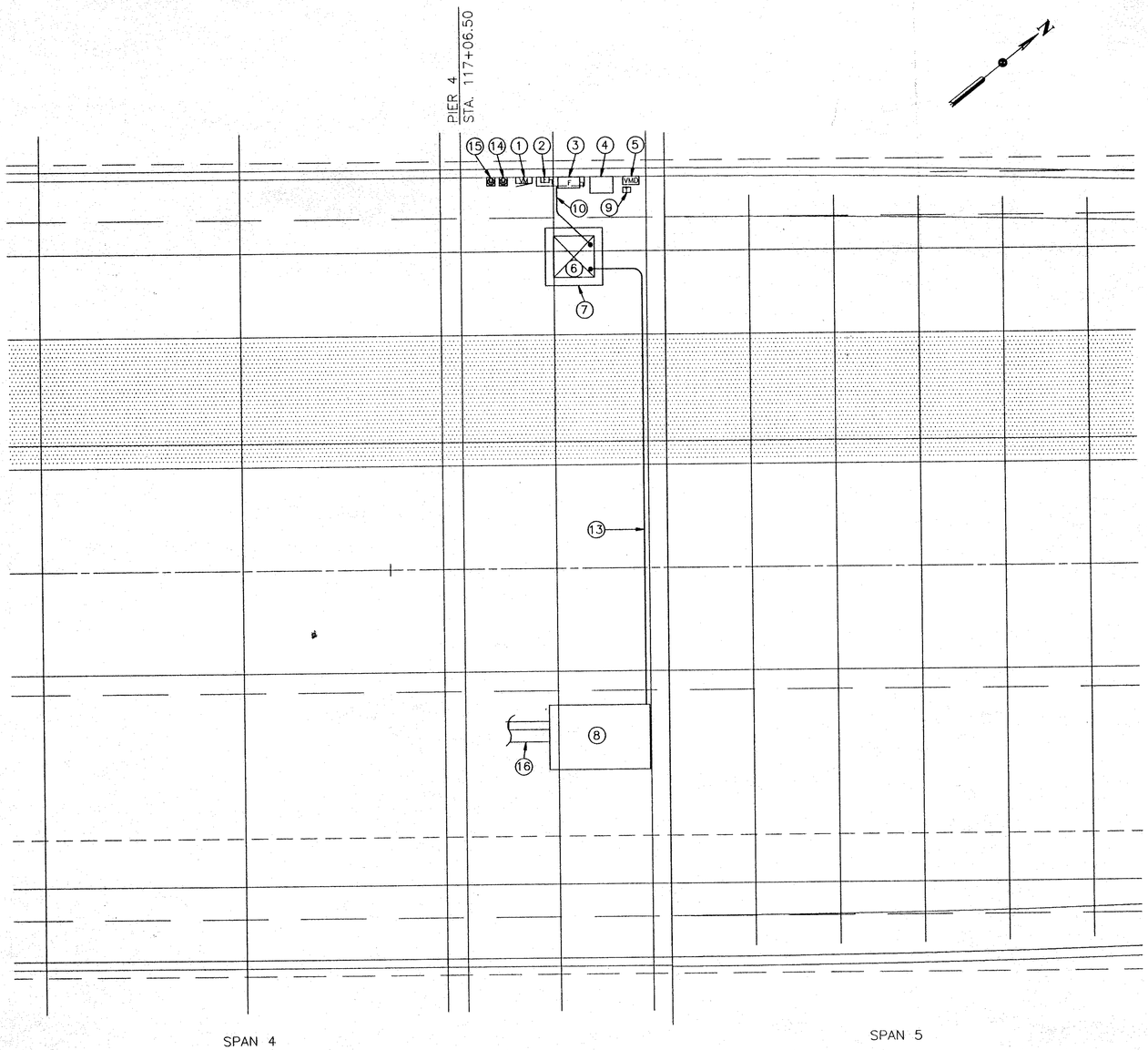

LIGHTING EQUIPMENT PLAN
Scale: 1/8" = 1'-0"

KEYED NOTES

1. "VM" VETERAN'S MEMORIAL BRIDGE ROADWAY LIGHTING CONTROL CENTER. SEE SHEET 95 "LIGHTING DETAILS".
2. 240V-200A-3P FUSED DISCONNECT SWITCH W/200A CL FUSES-NEMA 4X ENCLOSURE.
3. 240V-800A-2P-3W FUSED DISCONNECT SWITCH W/800A CL FUSES-NEMA 12 ENCLOSURE.
4. 240V-800A-2P MECHANICALLY HELD LIGHTING CONTACTOR, ASCO 911-2-800-6-1 OR EQUAL. NEMA 4X ENCLOSURE.
5. "VMD" VETERAN'S MEMORIAL BRIDGE DECORATIVE LIGHTING POWER DISTRIBUTION PANEL. 240V-2P-3W-800A. SEE PANEL SCHEDULE ON SHEET 130A FOR DETAILS.
6. PAD MOUNTED SERVICE TRANSFORMER BY CPP.
7. SUPPORT STRUCTURE FOR TRANSFORMER TO MAINTAIN TRANSFORMER 4'-0" ABOVE LOWER DECK.
8. CPP PULLING CHAMBER. SEE DETAILS ON SHEETS 130C THRU 130J.
9. TIME SWITCH, SEE SHEET 130A FOR DETAILS.
10. 2-SETS OF 2-500MCM (XHHW CU) AND 1 #3/0 IN 3" CONDUIT.
11. 12" X 12" X 6' WIREWAY NEMA 4X.
12. 3 #3/0, 2" C.
13. 2-5" PRIMARY DUCTS-GRC.
14. METERING FOR DECORATIVE LIGHTING PER CPP STANDARDS.
15. METERING FOR ROADWAY LIGHTING PER CPP STANDARDS.
16. CPP PRIMARY DUCT BANK (11KV). SEE DETAILS ON SHEETS 130C THRU 130J.
17. #4/0 COPPER GROUND IN 2" GRC - CONNECT TO BRIDGE GROUND SYSTEM.

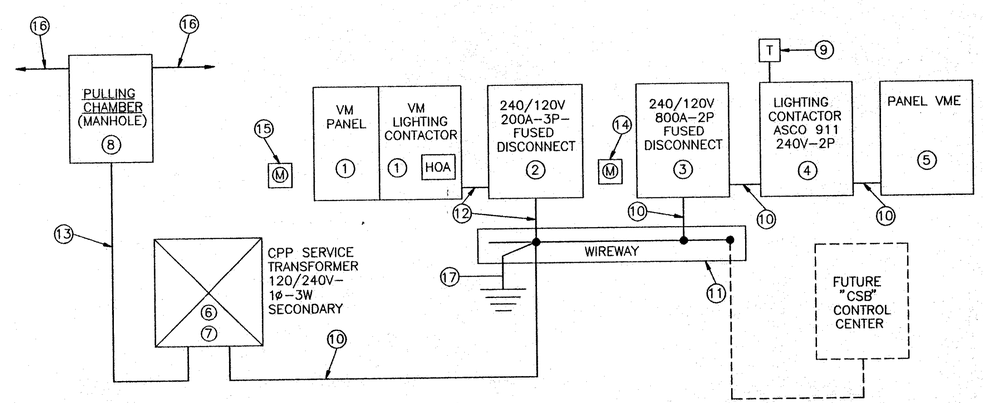

SINGLE LINE DIAGRAM
Not to Scale

LEGEND
OPEN TO BELOW

HOWARD NEEDLES TAMMEN & BERGENDOFF
ARCHITECTS ENGINEERS PLANNERS HNTB

MADE BY: F.E.G. DATE: 7/17/95
DRAWN BY: V.P. DATE: 7/17/95
CHECKED BY: N.C.Y. DATE: 7/17/95
SCALE: As Shown

21471/EQUIPCST 1=1

EAST END DECORATIVE LIGHTING EQUIPMENT PLAN

FHWA REGION	STATE	PROJECT	
5	OHIO		

130C
412

CUYAHOGA COUNTY
CUY – 6 – 14.99

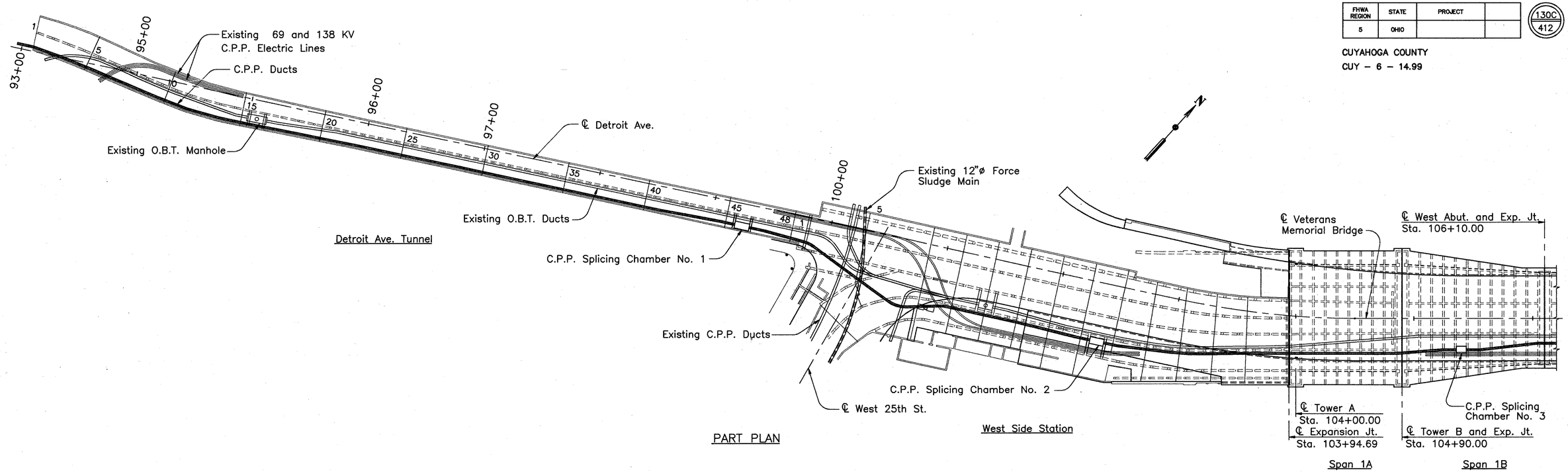

PART PLAN

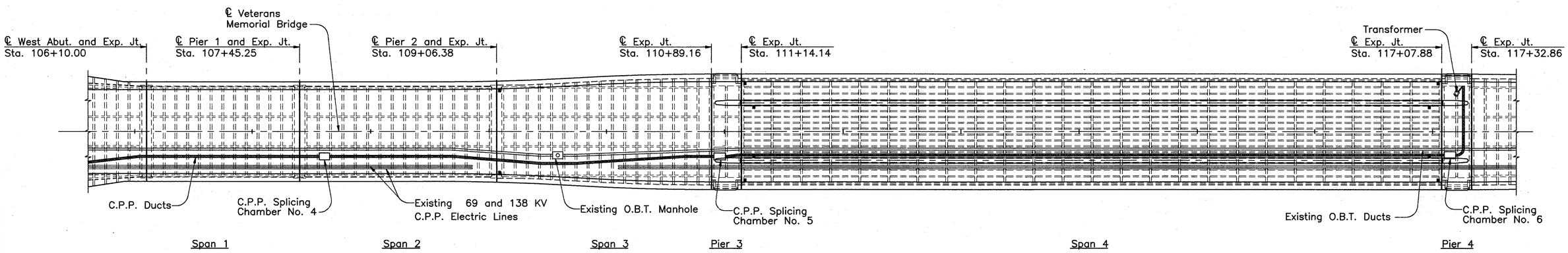

PART PLAN

COUNTY BRIDGE NO. 84

HOWARD NEEDLES TAMMEN & BERGENDOFF
ARCHITECTS ENGINEERS PLANNERS
HNTB

C.P.P. UTILITY PLANS
GENERAL PLAN
BR. NO. CUY – 6 – 1499
REHABILITATION OF
VETERANS MEMORIAL BRIDGE
(U.S. 6, 20, 42 & S.R. 3 OVER CUYAHOGA RIVER)

CLEVELAND CUYAHOGA COUNTY OHIO

DRAWN	TRACED	CHECKED	REVIEWED	REVISED
J.L.V.	J.L.V.	R.A.S.	C.A.B.	
DATE 8/26/94	DATE 8/26/94	DATE 8/27/94	DATE 8/28/94	SHEET

\11646\CONCRETE\CPP480.DWG

FHWA REGION	STATE	PROJECT	
5	OHIO		

130D / 412

CUYAHOGA COUNTY
CUY – 6 – 14.99

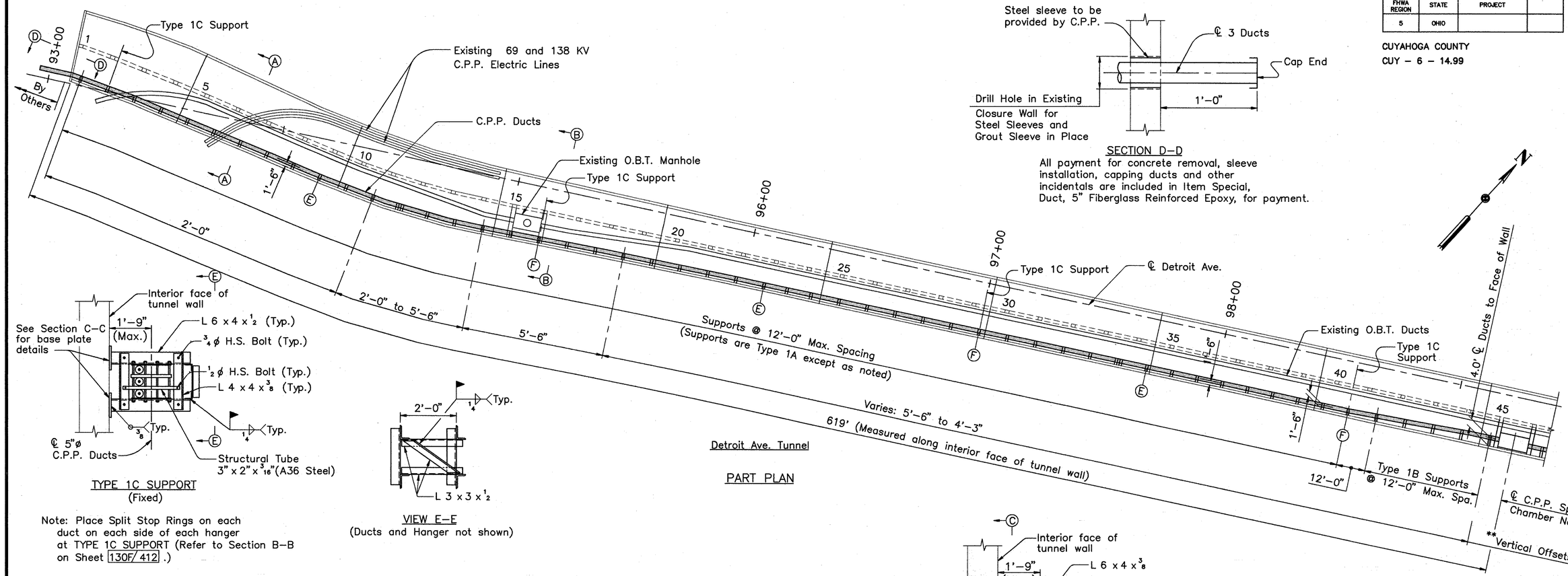

TYPE 1C SUPPORT
(Fixed)

Note: Place Split Stop Rings on each duct on each side of each hanger at TYPE 1C SUPPORT (Refer to Section B–B on Sheet 130F/412.)

VIEW E–E
(Ducts and Hanger not shown)

SECTION D–D
All payment for concrete removal, sleeve installation, capping ducts and other incidentals are included in Item Special, Duct, 5" Fiberglass Reinforced Epoxy, for payment.

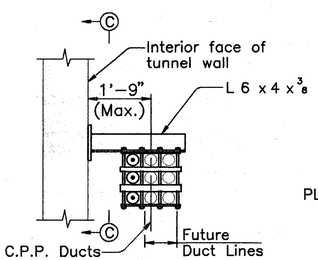

TYPE 1A SUPPORT

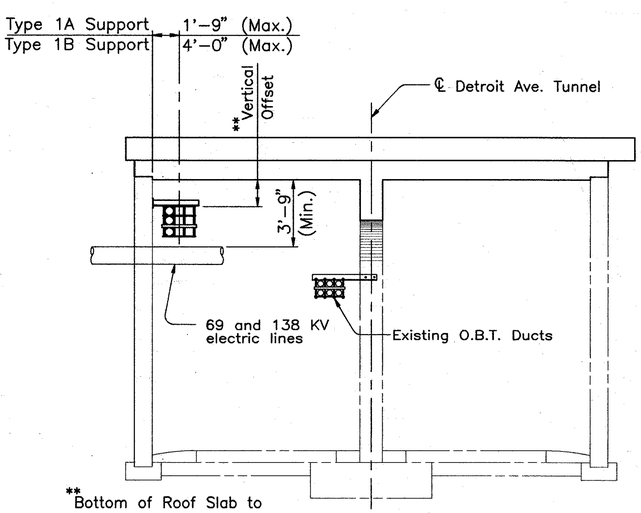

SECTION A–A

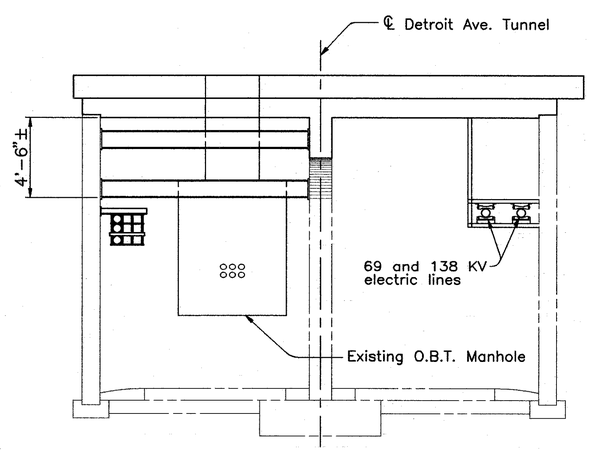

SECTION B–B
(For additional details, see Section A–A)

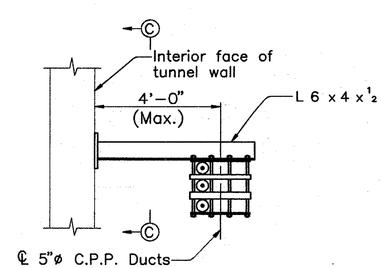

TYPE 1B SUPPORT

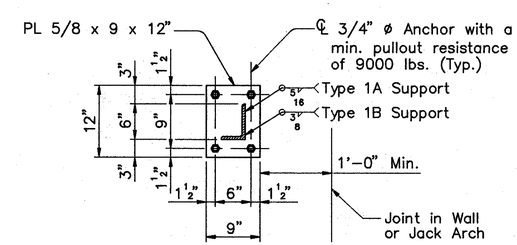

SECTION C–C

Notes:
Ⓔ Denotes Duct Expansion Joint.
Ⓕ Denotes Duct Fixed Joint.
For Expansion Joint Details, Duct Details, and Hanger Details see Sheet 130H/412.

COUNTY BRIDGE NO. 84

HOWARD NEEDLES TAMMEN & BERGENDOFF
ARCHITECTS ENGINEERS PLANNERS
HNTB

C.P.P. UTILITY PLANS
DETROIT AVENUE TUNNEL
BR. NO. CUY – 6 – 1499
REHABILITATION OF
VETERANS MEMORIAL BRIDGE
(U.S. 6, 20, 42 & S.R. 3 OVER CUYAHOGA RIVER)

CLEVELAND CUYAHOGA COUNTY OHIO

DRAWN	TRACED	CHECKED	REVIEWED	REVISED
J.L.V.	J.L.V.	R.A.S.	C.A.B.	
DATE 8/23/94	DATE 8/23/94	DATE 8/25/94	DATE 8/28/94	SHEET

\11646\CONCRETE\CPPDAT.DWG

FHWA REGION	STATE	PROJECT	
5	OHIO		

130E / 412

CUYAHOGA COUNTY
CUY – 6 – 14.99

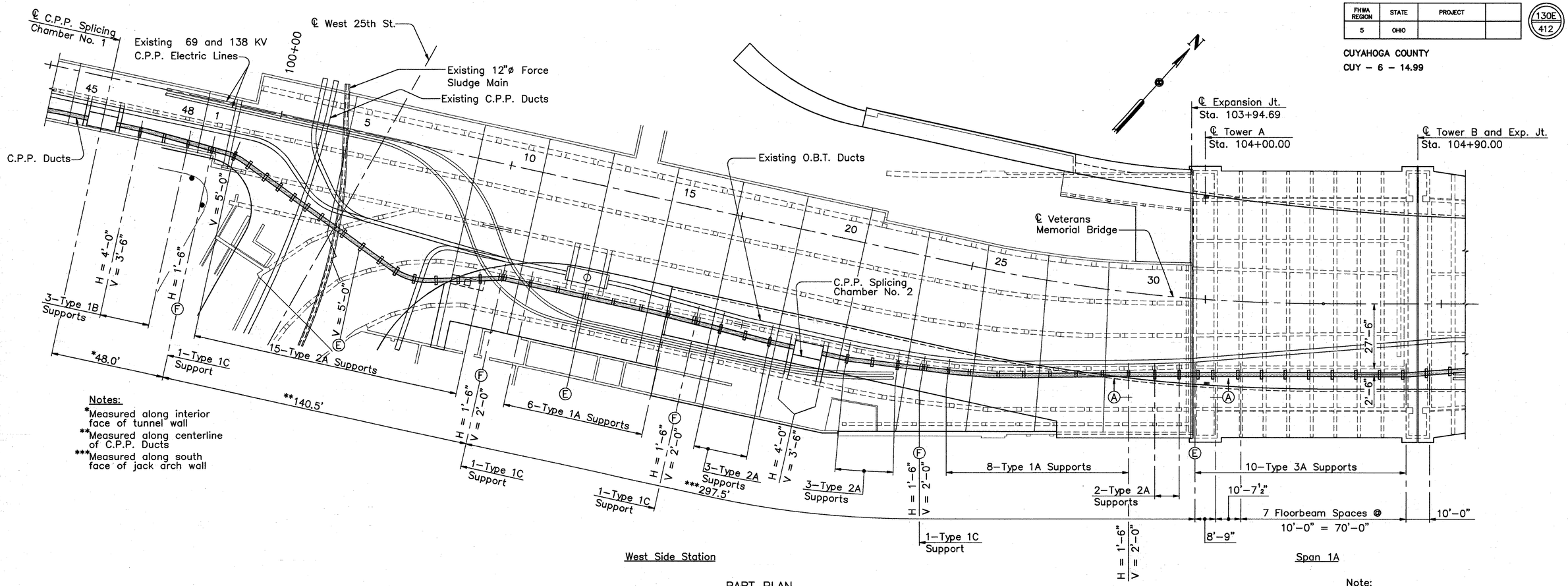

PART PLAN

Notes:
*Measured along interior face of tunnel wall
**Measured along centerline of C.P.P. Ducts
***Measured along south face of jack arch wall

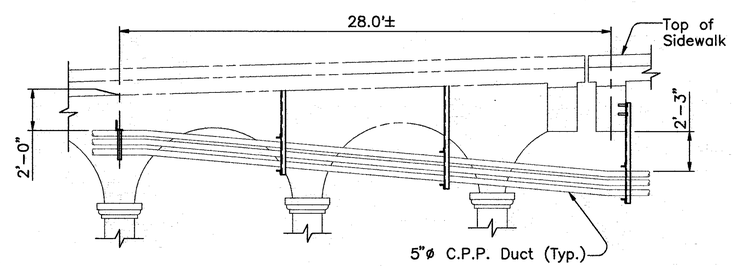

SECTION A–A

Note:
All spaces between supports or between supports and splicing chambers shall be 12'–0" maximum. The Contractor shall set the spaces such that all support connections clear concrete joints by 1'–0" minimum.

Notes:
For Type 1A, 1B, and 1C Support Details, see Sheet 130D/412.
For Type 2A Support Details, see Sheet 130H/412.
For Type 3A and 3B Support Details, see Sheet 130F/412.
For Duct Expansion Joint Details, see Sheet 130H/412.

Legend:
Ⓔ Denotes Duct Expansion Joint.
Ⓕ Denotes Duct Fixed Joint.
H Denotes Horizontal offset from ℄ C.P.P. Duct Bank to face of Tunnel Wall, Column or Jack Arch Wall.
V Denotes Vertical offset from Bottom of Roof Slab to top of first line of C.P.P. Ducts.

COUNTY BRIDGE NO. 84

HOWARD NEEDLES TAMMEN & BERGENDOFF
ARCHITECTS ENGINEERS PLANNERS
HNTB

C.P.P. UTILITY PLANS
WEST SIDE STATION AND SPAN 1A
BR. NO. CUY – 6 – 1499
REHABILITATION OF
VETERANS MEMORIAL BRIDGE
(U.S. 6, 20, 42 & S.R. 3 OVER CUYAHOGA RIVER)

CLEVELAND CUYAHOGA COUNTY OHIO

DRAWN	TRACED	CHECKED	REVIEWED	REVISED
J.L.V.	J.L.V.	R.A.S.	C.A.B.	
DATE 8/26/94	DATE 8/26/94	DATE 8/28/94	DATE 8/28/94	SHEET

\11646\CONCRETE\CPPWSS.DWG

FHWA REGION	STATE	PROJECT	
5	OHIO		

130F / 412

CUYAHOGA COUNTY
CUY – 6 – 14.99

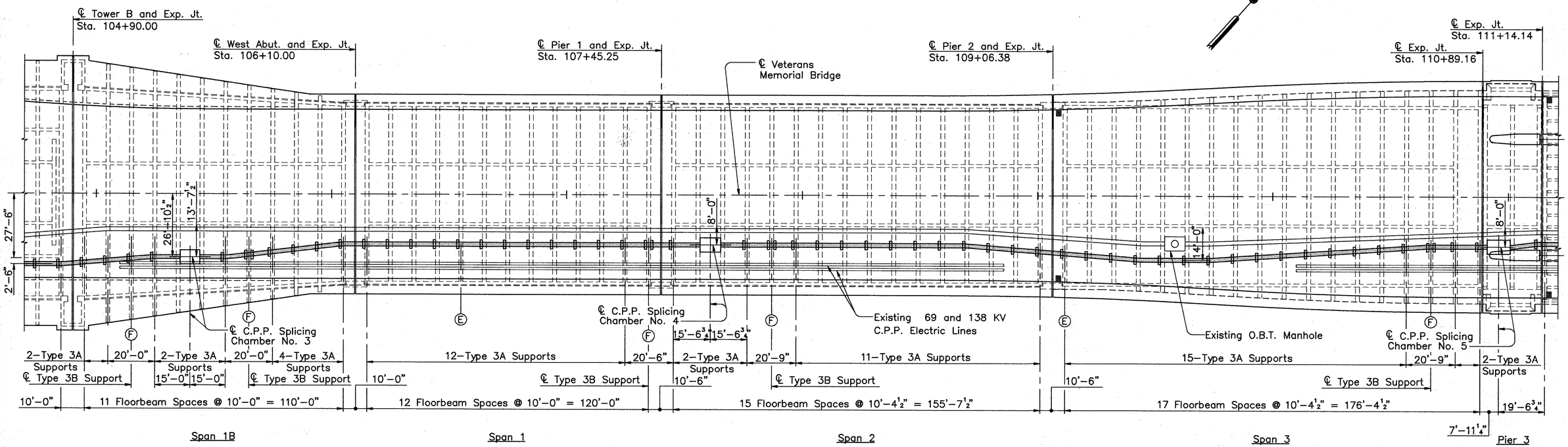

PART PLAN

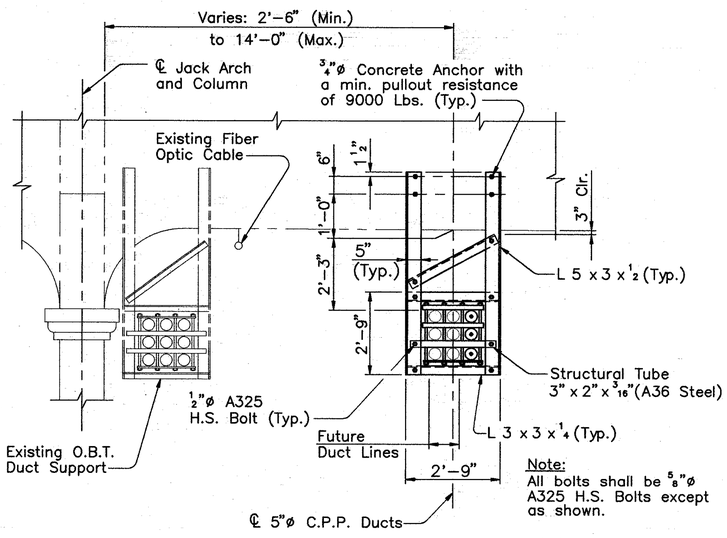

Note:
All bolts shall be ⅝"ø A325 H.S. Bolts except as shown.

TYPE 3A SUPPORT
(Looking East)

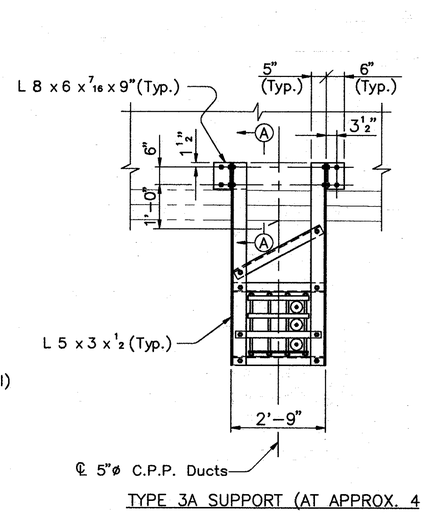

TYPE 3A SUPPORT (AT APPROX. 4 FLOORBEAMS IN SPAN 3)
(Looking East)
(For additional details, see Type 3A Support Detail)

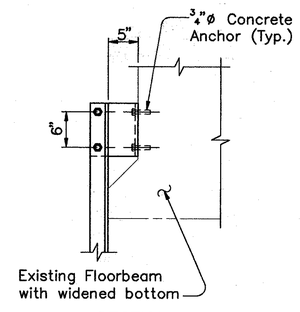

SECTION A–A

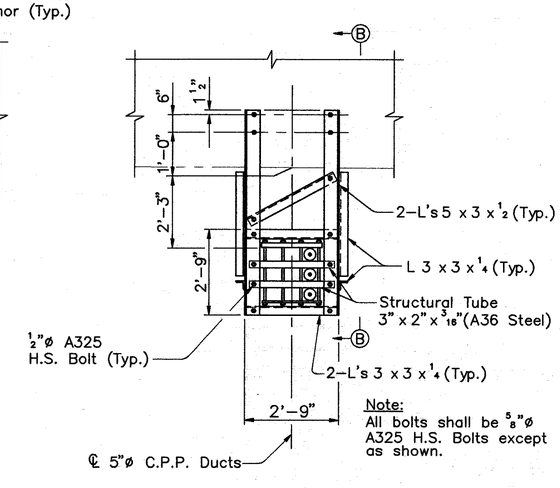

Note:
All bolts shall be ⅝"ø A325 H.S. Bolts except as shown.

TYPE 3B SUPPORT
(Looking East)
(For additional details, see Type 3A Support Detail)

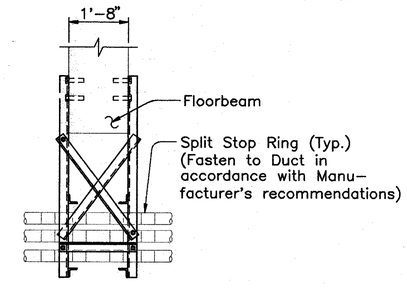

SECTION B–B

Notes:
Ⓔ Denotes Duct Expansion Joint.
Ⓕ Denotes Duct Fixed Joint.
For Expansion Joint Details, see Sheet 130H/412 .

COUNTY BRIDGE NO. 84

HOWARD NEEDLES TAMMEN & BERGENDOFF
ARCHITECTS ENGINEERS PLANNERS
HNTB

C.P.P. UTILITY PLANS
SPAN 1B THRU SPAN 3
BR. NO. CUY – 6 – 1499
REHABILITATION OF
VETERANS MEMORIAL BRIDGE
(U.S. 6, 20, 42 & S.R. 3 OVER CUYAHOGA RIVER)

CLEVELAND CUYAHOGA COUNTY OHIO

DRAWN	TRACED	CHECKED	REVIEWED	REVISED
J.L.V.	J.L.V.	R.A.S.	C.A.B.	
DATE 8/26/94	DATE 8/26/94	DATE 8/27/94	DATE 8/28/94	SHEET

\11646\CONCRETE\CPP1B3.DWG

FHWA REGION	STATE	PROJECT	
5	OHIO		

130G
412

CUYAHOGA COUNTY
CUY – 6 – 14.99

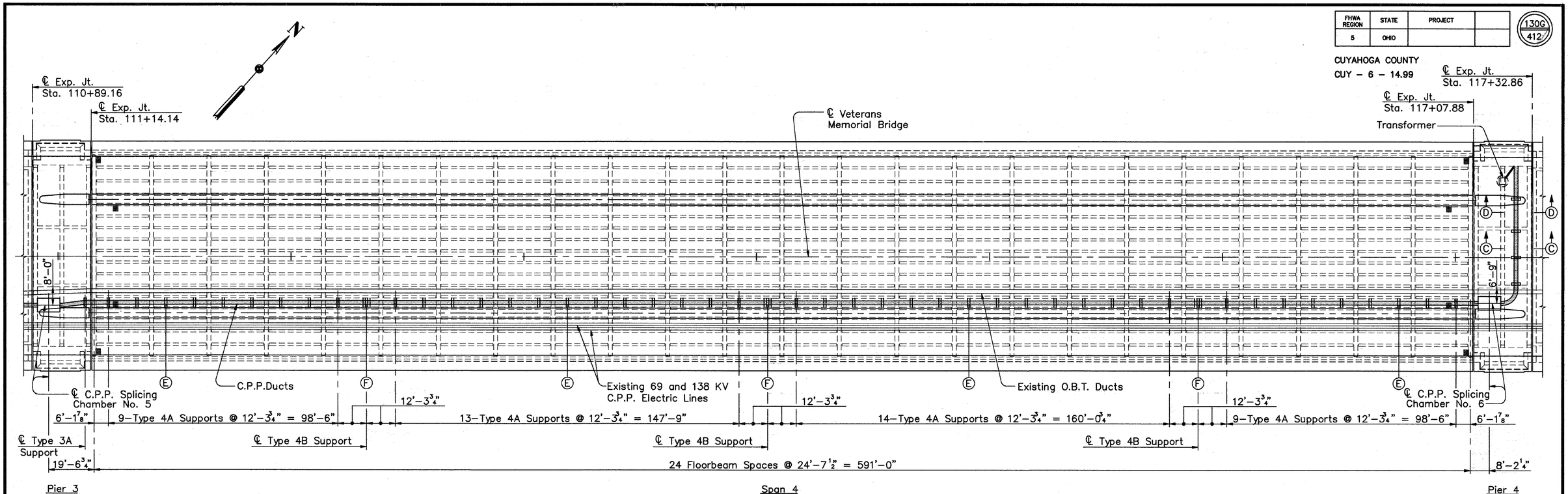

PART PLAN

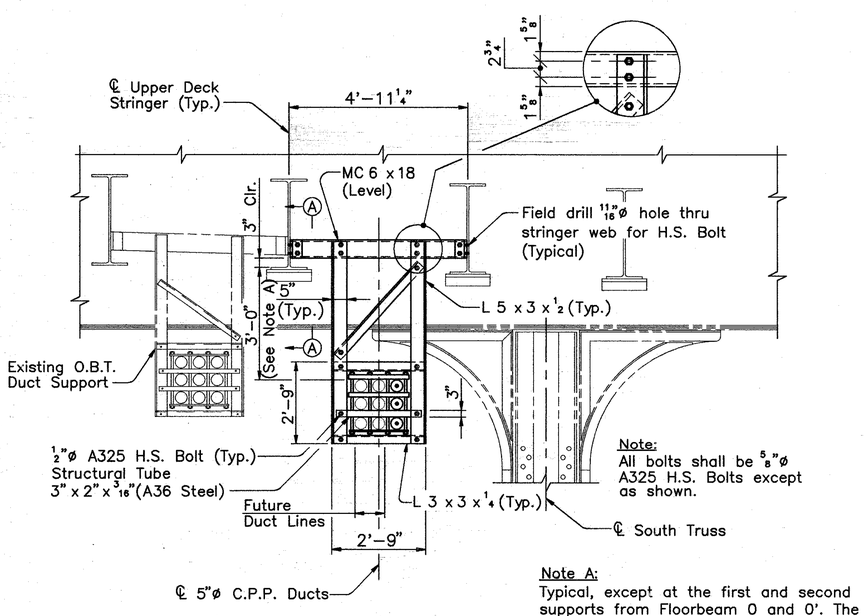

Note:
All bolts shall be ⅝"ø A325 H.S. Bolts except as shown.

Note A:
Typical, except at the first and second supports from Floorbeam 0 and 0'. The first support dimension shall be 4'–0" and the second support dimension shall be 3'–6".

TYPE 4A SUPPORT
(Looking East)

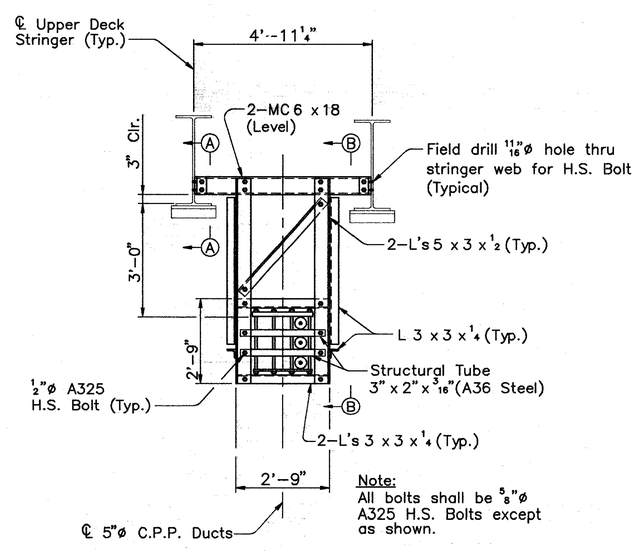

Note:
All bolts shall be ⅝"ø A325 H.S. Bolts except as shown.

TYPE 4B SUPPORT
(Looking East)
(For additional details, see Type 4A Support Detail)

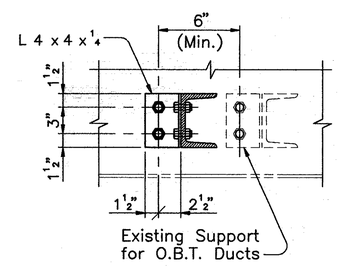

SECTION A–A

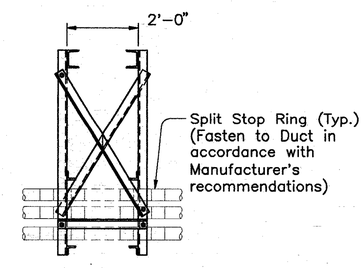

SECTION B–B

Notes:
Ⓔ Denotes Duct Expansion Joint.
Ⓕ Denotes Duct Fixed Joint.
For Type 3A Support Details see, Sheet 130F/412 .
For Expansion Joint Details, see Sheet 130H/412 .
For Sections C–C, D–D and Transformer Base Stand Detail, see Sheet 130H/412 .

COUNTY BRIDGE NO. 84

HOWARD NEEDLES TAMMEN & BERGENDOFF
ARCHITECTS ENGINEERS PLANNERS
HNTB

C.P.P. UTILITY PLAN
PIERS 3 AND 4 AND SPAN 4
BR. NO. CUY – 6 – 1499
REHABILITATION OF
VETERANS MEMORIAL BRIDGE
(U.S. 6, 20, 42 & S.R. 3 OVER CUYAHOGA RIVER)

CLEVELAND CUYAHOGA COUNTY OHIO

DRAWN	TRACED	CHECKED	REVIEWED	REVISED
J.L.V.	J.L.V.	R.A.S.	C.A.B.	
DATE 8/26/94	DATE 8/26/94	DATE 8/27/94	DATE 8/28/94	SHEET

\11646\CONCRETE\CPP344.DWG

FHWA REGION	STATE	PROJECT	
5	OHIO		

130H / 412

CUYAHOGA COUNTY
CUY – 6 – 14.99

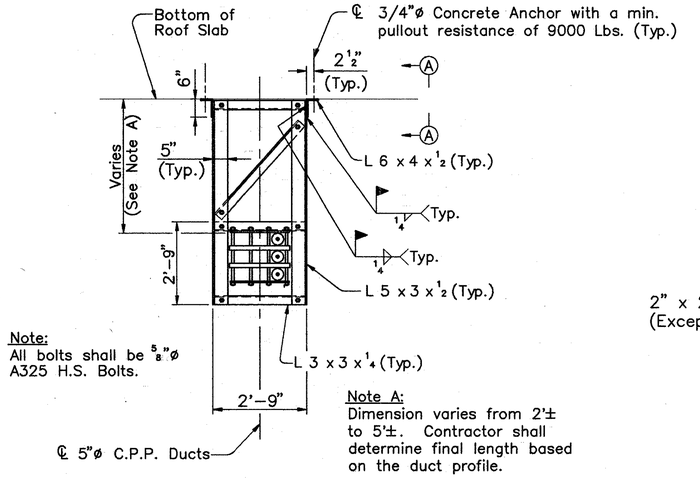

Note:
All bolts shall be 5/8"ø A325 H.S. Bolts.

Note A:
Dimension varies from 2'± to 5'±. Contractor shall determine final length based on the duct profile.

TYPE 2A SUPPORT
(Looking East)

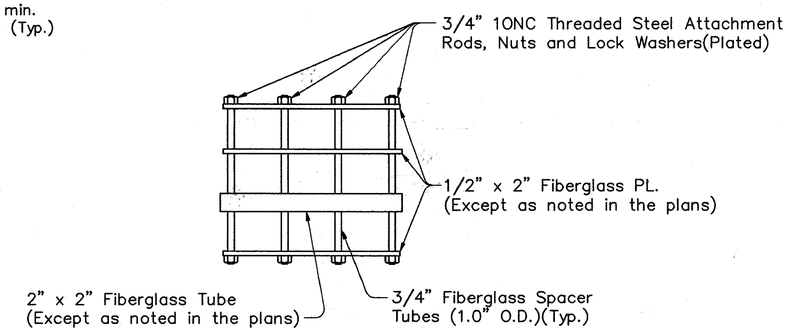

HANGER DETAIL

Notes: Attachment to structural supports varies, see Sheets 103D, E, F and G.

The hangers shall be as manufactured by Condux International, Inc.(P.O. Box 247, 145 Kingswood Road, Mankato, MN), P&C Inc. (4838 E. 355th Street, Willloughby, Ohio), or approved equal.

5" Fiberglass Reinforced Epoxy Duct Notes:

1. Couplings and fittings shall be staggered.
2. Conduit only is to pass through the hangers (not fittings). The conduit must be loose in the hangers.
3. There shall not be any couplings, fittings or joints within 2 feet of the hangers.

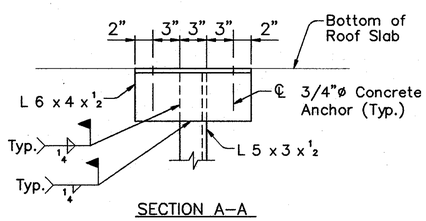

SECTION A–A

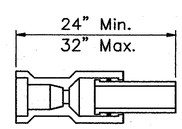

O–RING EXPANSION JOINT
5" DUCT

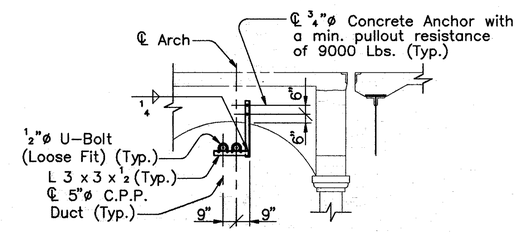

SECTION C–C

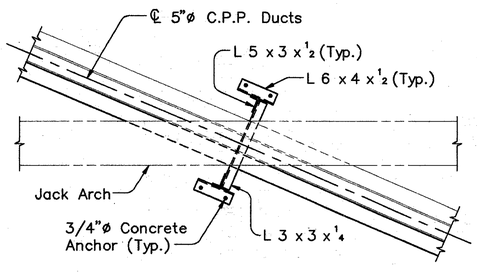

TYPE 2A SUPPORT
PLAN AT JACK ARCH 2–3, C

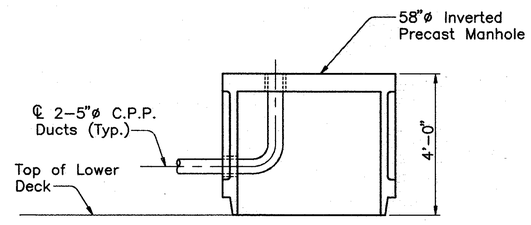

TRANSFORMER STAND DETAIL
(Provide openings in the Manhole as required for Duct Placement)

Note:
For Location of Transformer Base see Sheet 130G/412 .

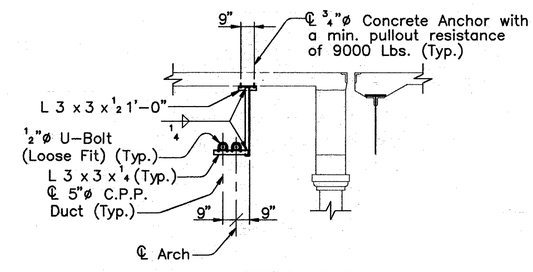

SECTION D–D

Note:
For Location of Section C–C and D–D, see Sheet 130G/412 .

COUNTY BRIDGE NO. 84

HOWARD NEEDLES TAMMEN & BERGENDOFF
ARCHITECTS ENGINEERS PLANNERS
HNTB

C.P.P. UTILITY PLANS
MISCELLANEOUS DETAILS
BR. NO. CUY – 6 – 1499
REHABILITATION OF
VETERANS MEMORIAL BRIDGE
(U.S. 6, 20, 42 & S.R. 3 OVER CUYAHOGA RIVER)
CLEVELAND CUYAHOGA COUNTY OHIO

DRAWN FSJ	TRACED JOL	CHECKED RAS	REVIEWED CAB	REVISED
DATE 8/27/94	DATE 8/27/94	DATE 8/28/94	DATE 8/28/94	SHEET

\11646\CONCRETE\CPPSTDET

FHWA REGION	STATE	PROJECT	
5	OHIO		

1301
412

CUYAHOGA COUNTY
CUY – 6 – 14.99

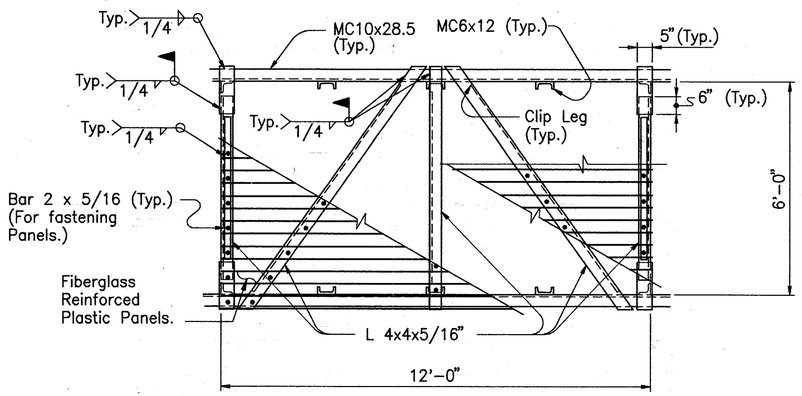

TOP PLAN

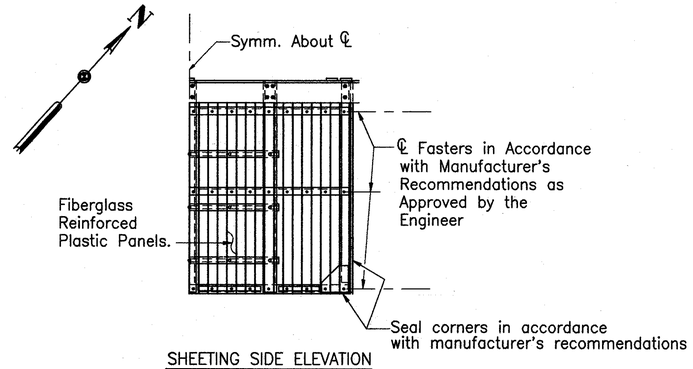

SHEETING SIDE ELEVATION

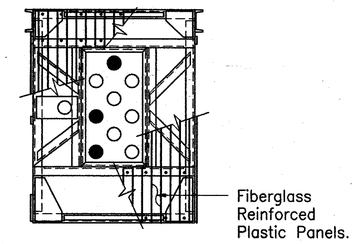

SHEETING END VIEW

See Sheeting Side Elevation for additional notes

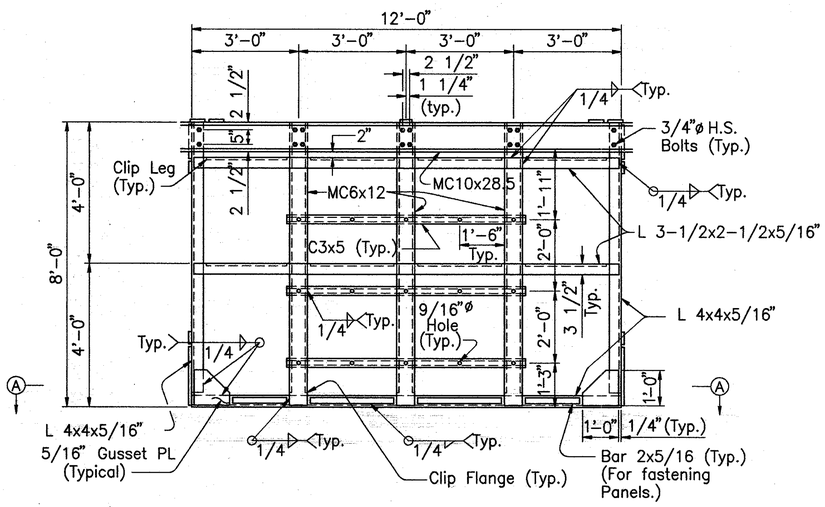

SIDE ELEVATION

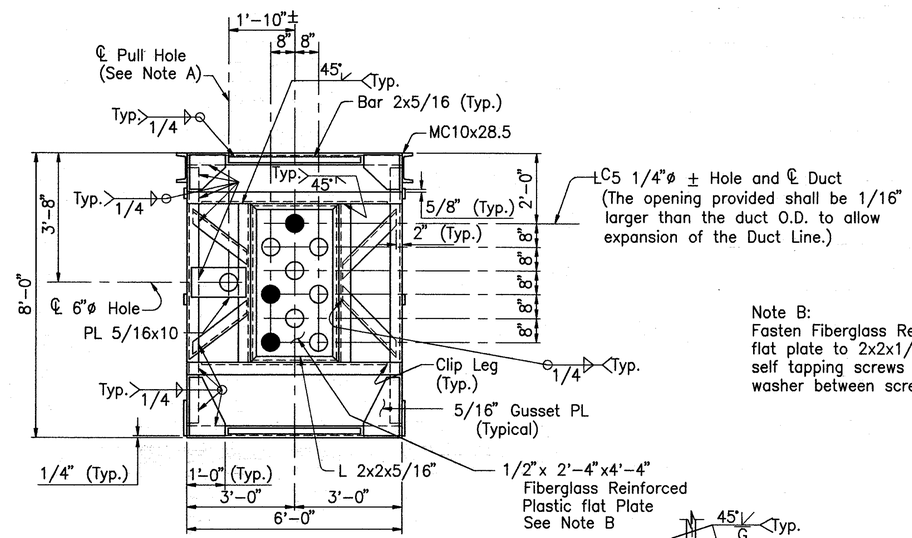

END VIEW

Note A: The pull hole will be placed on the north side of the chamber at both ends.

Note B:
Fasten Fiberglass Reinforced Plastic flat plate to 2x2x1/2 Angles with 1/4" self tapping screws at 8" ctrs. Provide washer between screws and plate.

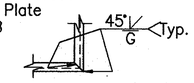

TYP. L 2x2x5/16 CORNER DETAIL

NOTES:
ALL BOLTS ARE 3/4"ø H.S. BOLTS UNLESS OTHEWISE NOTED.

ROOFING AND FLOOR PANELING ARE NOT DESIGNED FOR LIVE LOAD.

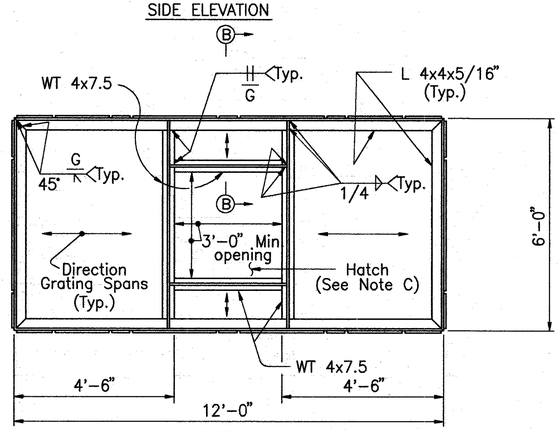

SECTION A–A

NOTE C:
The Access Hatch shall be Bilco type K–4, Halliday Series S1R, or approved Equal. The Top of the hatch shall be set level with the Top of the fiberglass grating . The Contractor shall modify the structural framing as required to accept the selected hatch. No additional payments will be made for any alterations. Payment is included in the unit price bid for Item Special, C.P.P. Splicing Chamber.

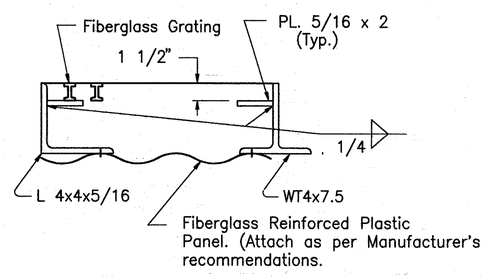

SECTION B–B

COUNTY BRIDGE NO. 84

HOWARD NEEDLES TAMMEN & BERGENDOFF
ARCHITECTS ENGINEERS PLANNERS
HNTB

C.P.P. UTILITY PLAN
SPLICING CHAMBERS
BR. NO. CUY – 6 – 1499
REHABILITATION OF
VETERANS MEMORIAL BRIDGE
(U.S. 6, 20, 42 & S.R. 3 OVER CUYAHOGA RIVER)

CLEVELAND CUYAHOGA COUNTY OHIO

DRAWN V.P.	TRACED V.P.	CHECKED R.A.S.	REVIEWED C.A.B.	REVISED
DATE 8/26/94	DATE 8/26/94	DATE 8/28/94	DATE 8/28/94	SHEET

\11646\CONCRETE\CPPSPLCH.DWG

FHWA REGION	STATE	PROJECT	
5	OHIO		

130J / 412

CUYAHOGA COUNTY
CUY – 6 – 14.99

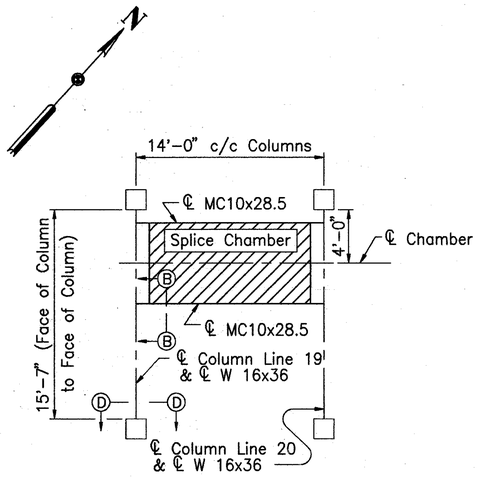

SUPPORT PLAN–CHAMBER 2 (WEST SIDE STATION)

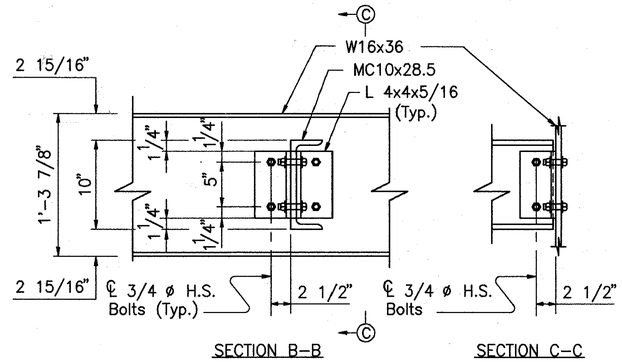

SECTION B–B

SECTION C–C

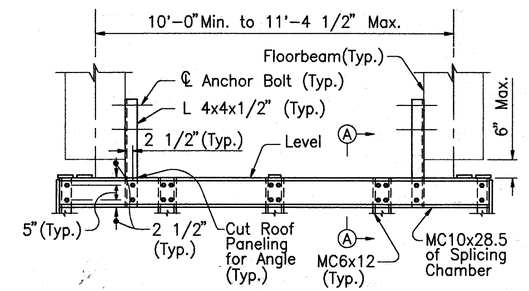

SPLICE CHAMBER SUPPORTS FOR CHAMBERS 3 THRU 6

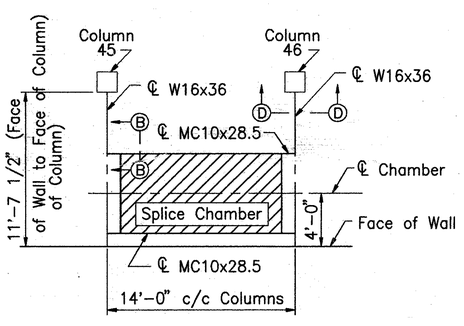

SUPPORT PLAN–CHAMBER 1 (DETROIT TUNNEL)

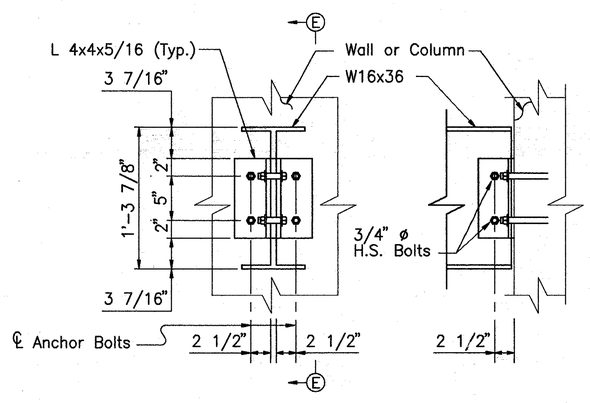

SECTION D–D

SECTION E–E

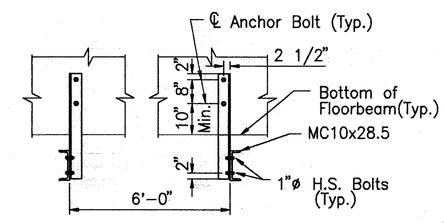

SECTION A–A

NOTES:
ALL BOLTS ARE 3/4"ø H.S. BOLTS UNLESS OTHERWISE NOTED.
ALL ANCHOR BOLTS ARE 1"ø CONCRETE ANCHORS WITH A MINIMUM SAFE WORKING SHEAR OF 6350 LBS.

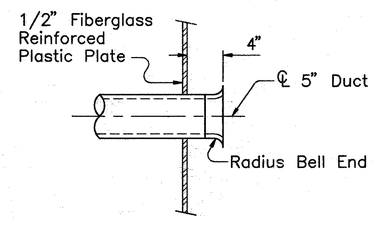

DUCT TERMINUS
(At Splicing Chamber)

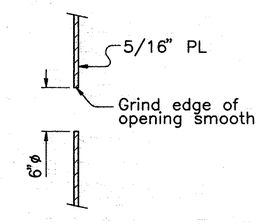

PULL HOLE DETAIL

COUNTY BRIDGE NO. 84

HOWARD NEEDLES TAMMEN & BERGENDOFF
ARCHITECTS ENGINEERS PLANNERS
HNTB

C.P.P. UTILITY PLANS
SPLICING CHAMBER DETAILS
BR. NO. CUY – 6 – 1499
REHABILITATION OF
VETERANS MEMORIAL BRIDGE
(U.S. 6, 20, 42 & S.R. 3 OVER CUYAHOGA RIVER)

CLEVELAND CUYAHOGA COUNTY OHIO

DRAWN V.P.	TRACED V.P.	CHECKED R.A.S.	REVIEWED C.A.B.	REVISED
DATE 8/26/94	DATE 8/26/94	DATE 8/28/94	DATE 8/28/94	SHEET

\11646\CONCRETE\CPPSPCH2.DWG

FHWA REGION	STATE	PROJECT	
5	OHIO		

130K
412R

CUYAHOGA COUNTY
CUY-6-14.99

* FIELD VERIFY WIDTH OF PIERS AND MEASURE INDENTATIONS PRIOR TO FABRICATION OF BRACKETS.

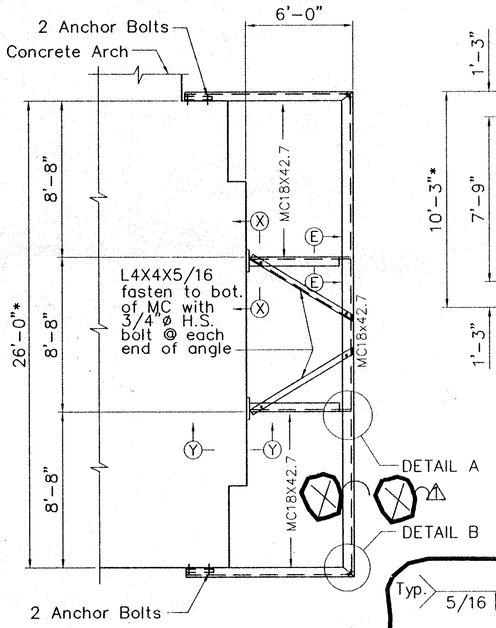

BRACKET DETAIL
Piers 3 and 4

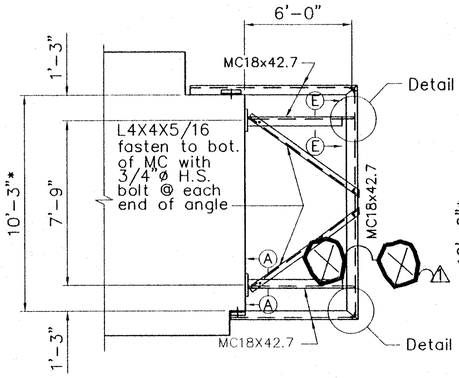

BRACKET DETAIL
Piers 10 and 11

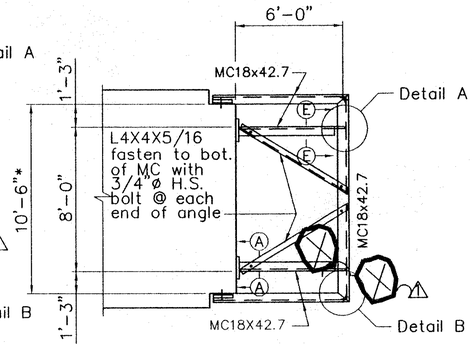

BRACKET DETAIL
Piers 1, 2, 5 Thru 9

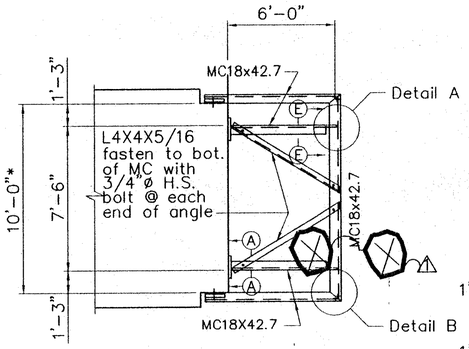

BRACKET DETAIL
Pier 12

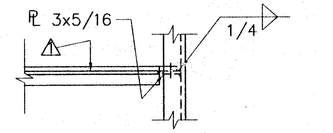

PLAN

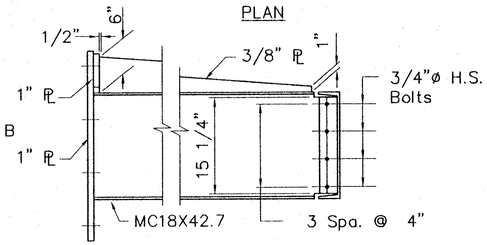

ELEVATION

DETAIL A

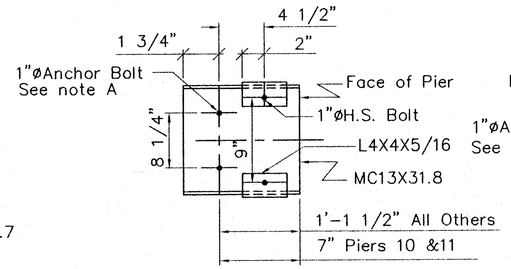

SECTION D-D
(Typical All Piers except Piers 3 & 4)

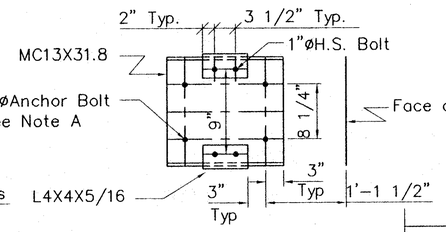

SECTION D-D
(Piers 3 & 4)

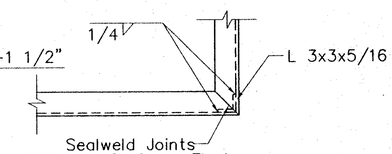

PLAN

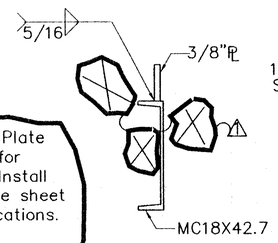

SECTION E-E

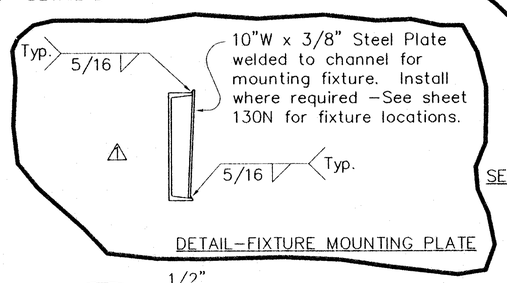

DETAIL-FIXTURE MOUNTING PLATE

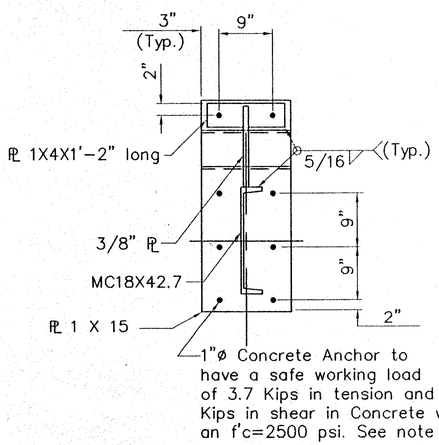

SECTION X-X

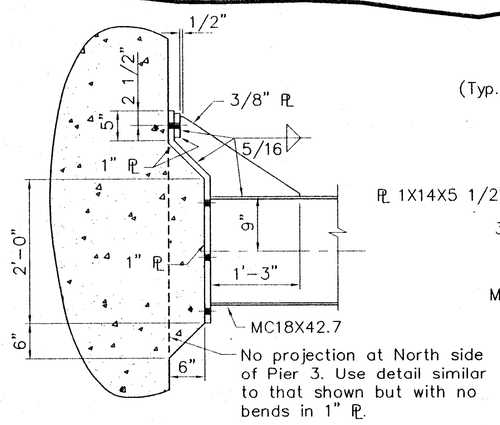

SECTION Y-Y

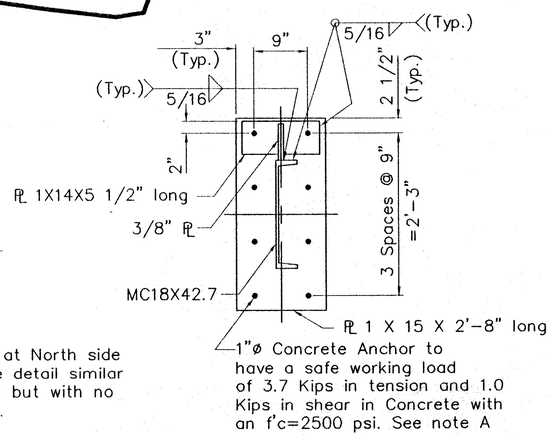

SECTION A-A

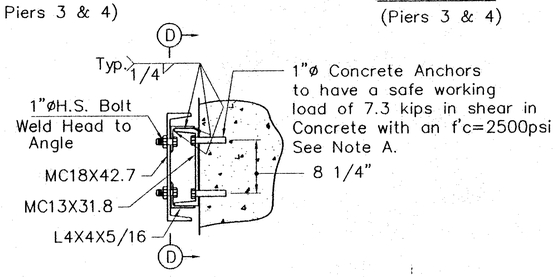

TYPICAL END CONNECTION DETAIL

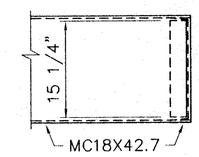

ELEVATION

DETAIL B

Note: To facilitate erection, one corner joint can be field welded.

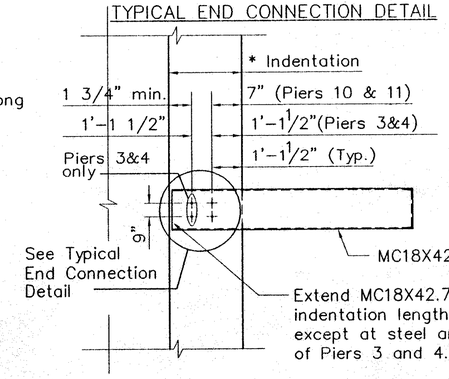

TYPICAL END ELEVATION

Note A: Concrete Anchors shall have a minimum of 4 1/2" embedment into unpatched concrete.

NOTES:

STRUCTURAL STEEL-ASTM-A36.
BOLTS-ASTM A325.

ALL SURFACES OF BRACKETS TO BE PAINTED WHITE, FEDERAL SPEC NO.37722-SYSTEM IZEU.

HOWARD NEEDLES TAMMEN & BERGENDOFF
ARCHITECTS ENGINEERS PLANNERS
HNTB

MADE BY: F.S.J. DATE: 7/17/95
DRAWN BY: VP DATE: 7/17/95
CHECKED BY: N.C.T. DATE: 7/17/95
SCALE: As Shown

REVISED BY FSJ 4-3-96
REV. CHECKED BY JOL 4-8-96

F:\PROJECTS\BRIDGE\233181\VETMEM\LTGBRCKT.DWG

PIER BRACKET MOUNTING DETAILS

FHWA REGION	STATE	PROJECT	
5	OHIO		

(130L) (412R)

CUYAHOGA COUNTY
CUY-6-14.99

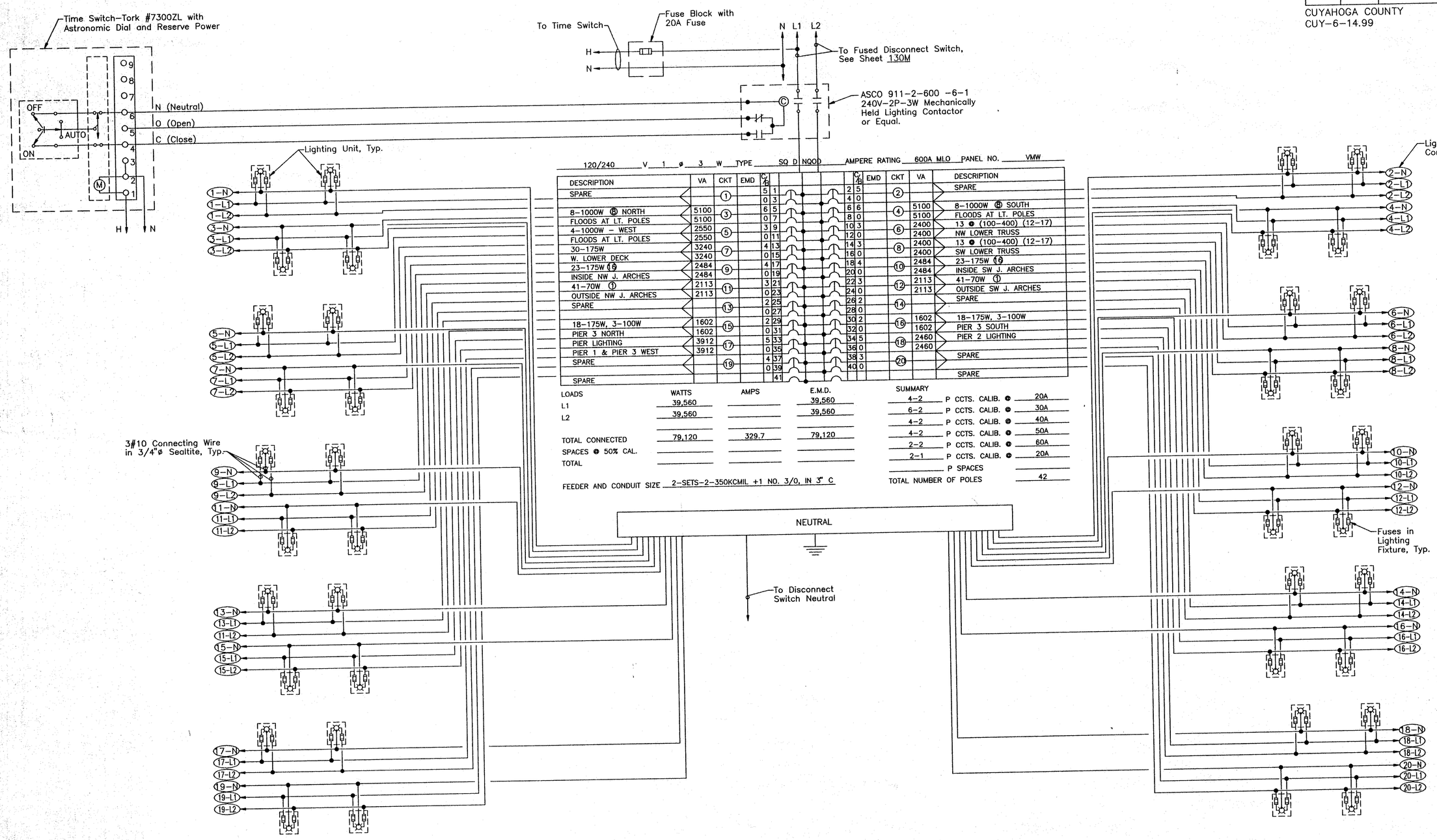

120/240 V 1 ø 3 W TYPE SQ D NQOD AMPERE RATING 600A MLO PANEL NO. VMW

DESCRIPTION	VA	CKT	EMD	C/B					C/B	EMD	CKT	VA	DESCRIPTION
SPARE		1		5	1			2	5		2		SPARE
				0	3			4	0				
8-1000W (B) NORTH	5100	3		6	5			6	6		4	5100	8-1000W (B) SOUTH
FLOODS AT LT. POLES	5100			0	7			8	0			5100	FLOODS AT LT. POLES
4-1000W - WEST	2550	5		3	9			10	3		6	2400	13 ● (100-400) (12-17)
FLOODS AT LT. POLES	2550			0	11			12	0			2400	NW LOWER TRUSS
30-175W	3240	7		4	13			14	3		8	2400	13 ● (100-400) (12-17)
W. LOWER DECK	3240			0	15			16	0			2400	SW LOWER TRUSS
23-175W (16)	2484	9		4	17			18	4		10	2484	23-175W (16)
INSIDE NW J. ARCHES	2484			0	19			20	0			2484	INSIDE SW J. ARCHES
41-70W (1)	2113	11		3	21			22	3		12	2113	41-70W (1)
OUTSIDE NW J. ARCHES	2113			0	23			24	0			2113	OUTSIDE SW J. ARCHES
SPARE		13		2	25			26	2		14		SPARE
				0	27			28	0				
18-175W, 3-100W	1602	15		2	29			30	2		16	1602	18-175W, 3-100W
PIER 3 NORTH	1602			0	31			32	0			1602	PIER 3 SOUTH
PIER LIGHTING	3912	17		5	33			34	5		18	2460	PIER 2 LIGHTING
PIER 1 & PIER 3 WEST	3912			0	35			36	0			2460	
SPARE		19		4	37			38	3		20		SPARE
				0	39			40	0				
SPARE					41								SPARE

LOADS	WATTS	AMPS	E.M.D.
L1	39,560		39,560
L2	39,560		39,560
TOTAL CONNECTED	79,120	329.7	79,120
SPACES ● 50% CAL.			
TOTAL			

FEEDER AND CONDUIT SIZE 2-SETS-2-350KCMIL +1 NO. 3/0, IN 3" C

SUMMARY

4-2	P CCTS. CALIB. ●	20A
6-2	P CCTS. CALIB. ●	30A
4-2	P CCTS. CALIB. ●	40A
4-2	P CCTS. CALIB. ●	50A
2-2	P CCTS. CALIB. ●	60A
2-1	P CCTS. CALIB. ●	20A
	P SPACES	
TOTAL NUMBER OF POLES		42

HOWARD NEEDLES TAMMEN & BERGENDOFF
ARCHITECTS ENGINEERS PLANNERS
HNTB

MADE BY: F.E.G. DATE 07/17/95
DRAWN BY: P.J.K. DATE 07/17/95
CHECKED BY: N.C.Y. DATE 07/17/95
SCALE: As Shown.

21471/SEAL 1=1

WEST END DECORATIVE LIGHTING WIRING DIAGRAM

FHWA REGION	STATE	PROJECT	
5	OHIO		

130M
412R

CUYAHOGA COUNTY
CUY-6-14.99

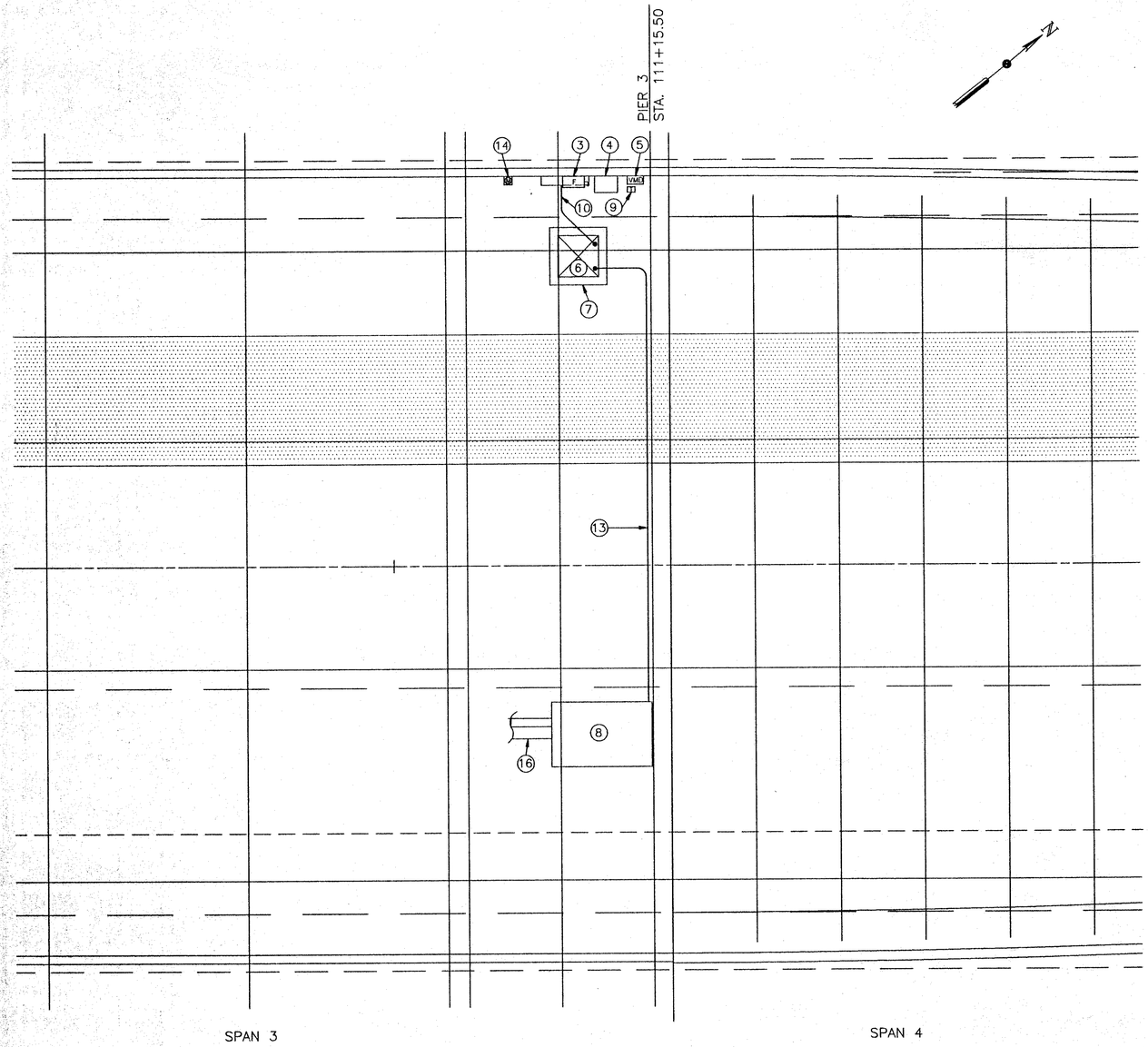

LIGHTING EQUIPMENT PLAN
Scale: 1/8" = 1'-0"

KEYED NOTES

1
2
3 240V-600A-2P-3W FUSED DISCONNECT SWITCH W/600A CL FUSES-NEMA 12 ENCLOSURE.
4 240V-600A-2P MECHANICALLY HELD LIGHTING CONTACTOR, ASCO 911-2-600-6-1 OR EQUAL. NEMA 4X ENCLOSURE.
5 "VMW" VETERAN'S MEMORIAL BRIDGE WEST END DECORATIVE LIGHTING POWER DISTRIBUTION PANEL. 240V-2P-3W-800A. SEE PANEL SCHEDULE ON SHEET 130L FOR DETAILS.
6 PAD MOUNTED SERVICE TRANSFORMER BY CPP.
7 SUPPORT STRUCTURE FOR TRANSFORMER TO MAINTAIN TRANSFORMER 4'-0" ABOVE LOWER DECK.
8 CPP SPLICING CHAMBER. SEE DETAILS ON SHEETS 130C THRU 130J.
9 TIME SWITCH, SEE SHEET 130A FOR DETAILS.
10 2-SETS OF 2-350KCMIL (XHHW CU) AND 1 #3/0 IN 3" CONDUIT.
11
12
13 2-5" PRIMARY DUCTS-GRC.
14 METERING FOR DECORATIVE LIGHTING PER CPP STANDARDS.
15
16 CPP PRIMARY DUCT BANK (11KV). SEE DETAILS ON SHEETS 130C THRU 130J.
17 #4/0 COPPER GROUND IN 2" GRC - CONNECT TO BRIDGE GROUND SYSTEM.

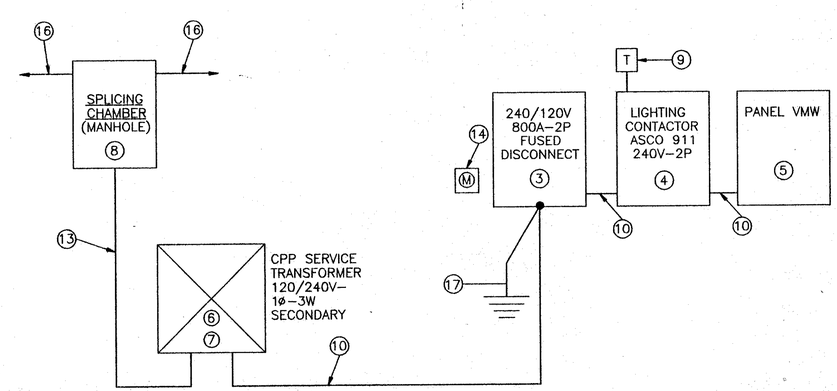

SINGLE LINE DIAGRAM
Not to Scale

LEGEND
OPEN TO BELOW

HOWARD NEEDLES TAMMEN & BERGENDOFF
ARCHITECTS ENGINEERS PLANNERS
HNTB

MADE BY: F.E.G. DATE 07/17/95
DRAWN BY: P.J.K. DATE 07/17/95
CHECKED BY: N.C.Y. DATE 07/17/95
SCALE: As Shown

21471/EQUIPWST 1of1

WEST END DECORATIVE LIGHTING EQUIPMENT PLAN

FHWA REGION	STATE	PROJECT	
5	OHIO		

130N
412R

CUYAHOGA COUNTY
CUY-6-14.99

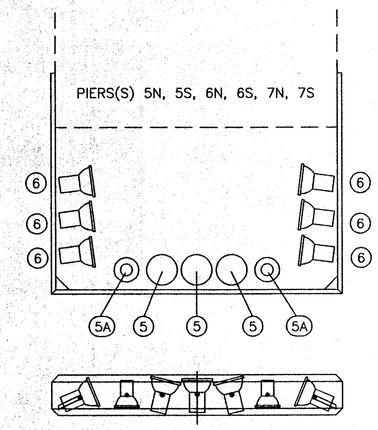

PIER BRACKET TYPE "A"
SCALE: 3/8" = 1'-0"

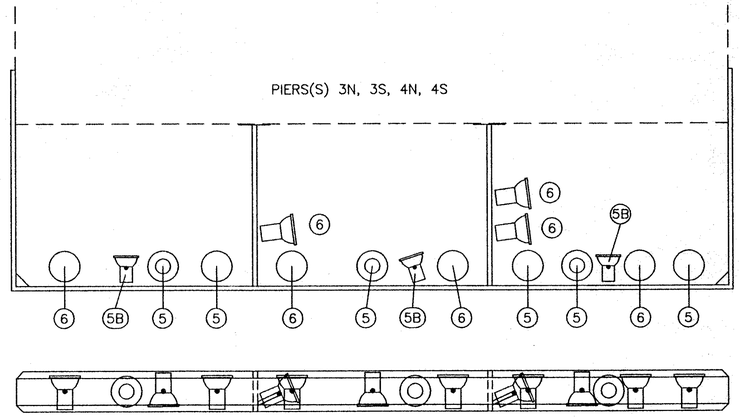

PIER BRACKET TYPE "B"
SCALE: 3/8" = 1'-0"

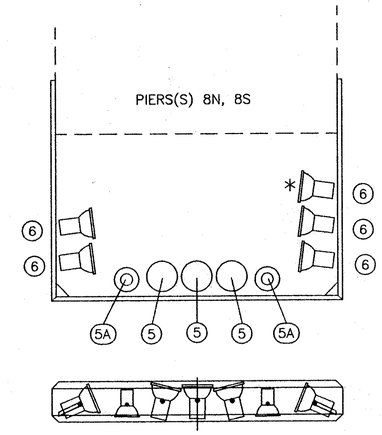

PIER BRACKET TYPE "D"
SCALE: 3/8" = 1'-0"

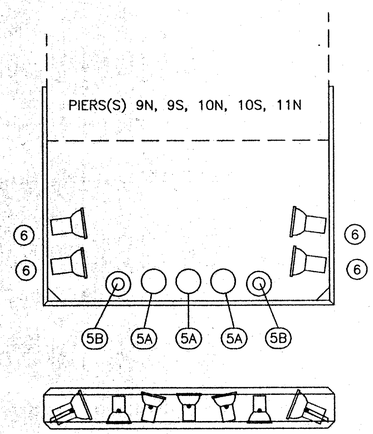

PIER BRACKET TYPE "E"
SCALE: 3/8" = 1'-0"

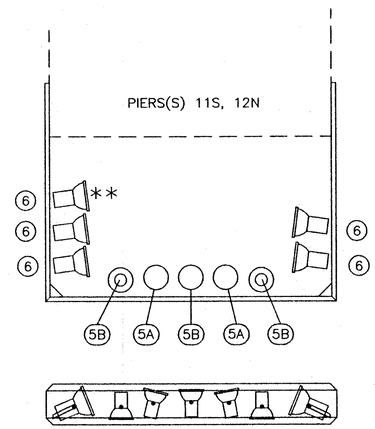

PIER BRACKET TYPE "F"
SCALE: 3/8" = 1'-0"

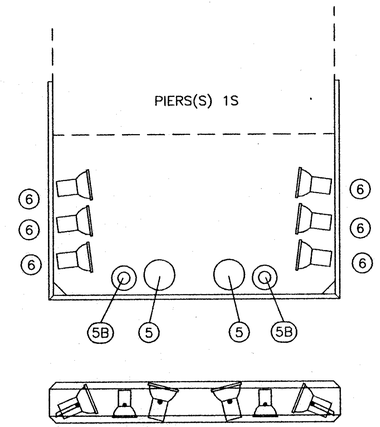

PIER BRACKET TYPE "G"
SCALE: 3/8" = 1'-0"

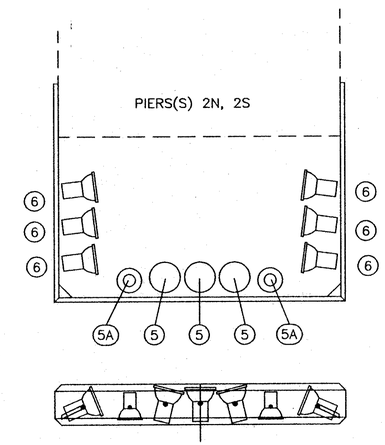

PIER BRACKET TYPE "H"
SCALE: 3/8" = 1'-0"

NOTES:

* PIERS TO BE A MIRROR OF EACH OTHER WITH EXTRA ⑥ FIXTURE TO AIM TOWARD SPAN 4

** EXTRA ⑥ FIXTURE TO AIM TOWARD EAST ABUTMENT.

THIS DRAWING IS FOR APPROXIMATE LAYOUT AND POSITIONING OF LIGHT FIXTURES ONLY. SEE DWG. 130K FOR BRACKET DETAILS AND DECORATIVE LIGHTING NOTES FOR AIMING.

HOWARD NEEDLES TAMMEN & BERGENDOFF
ARCHITECTS ENGINEERS PLANNERS HNTB

MADE BY: F.E.G. DATE: 7/17/95
DRAWN BY: V.P. DATE: 7/17/95
CHECKED BY: N.C.Y. DATE: 7/17/95
SCALE: 3/8"=1'-0"
BRACKET1

F:\PROJECTS\BRIDGE\23316\VENDEA\BRACKET

PIER BRACKET LAYOUT

FHWA REGION	STATE	PROJECT	
5	OHIO		

130R
412R

CUYAHOGA COUNTY
CUY-6-14.99

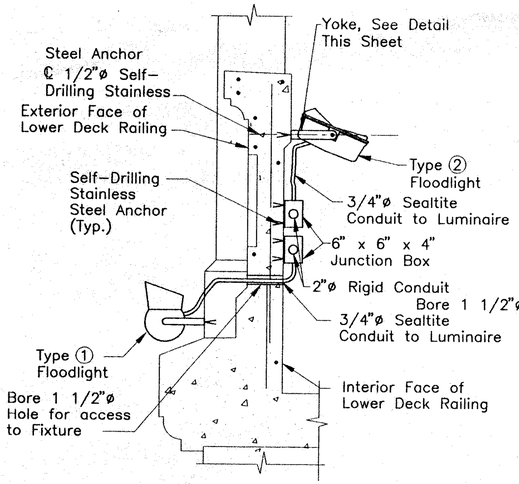

SECTION A-A
Scale 3/4" = 1'-0"

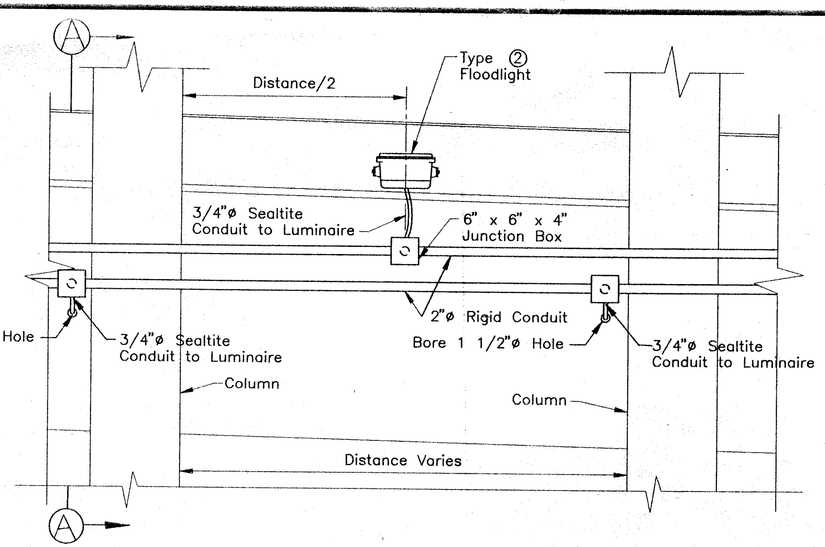

ELEVATION-INTERIOR FACE OF LOWER DECK RAILING
LUMINAIRE MOUNTED ON CONCRETE
Scale: 3/4" = 1'-0"

Note:
All mounting hardware to be hot dipped galvanized A36 steel unless otherwise specified.

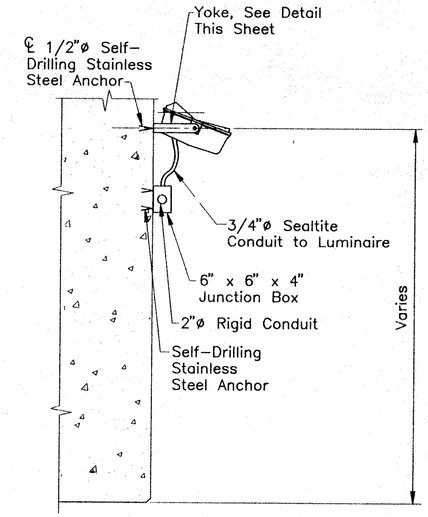

TYPICAL MOUNTING TYPES ③, ④, ⑦, ⑩

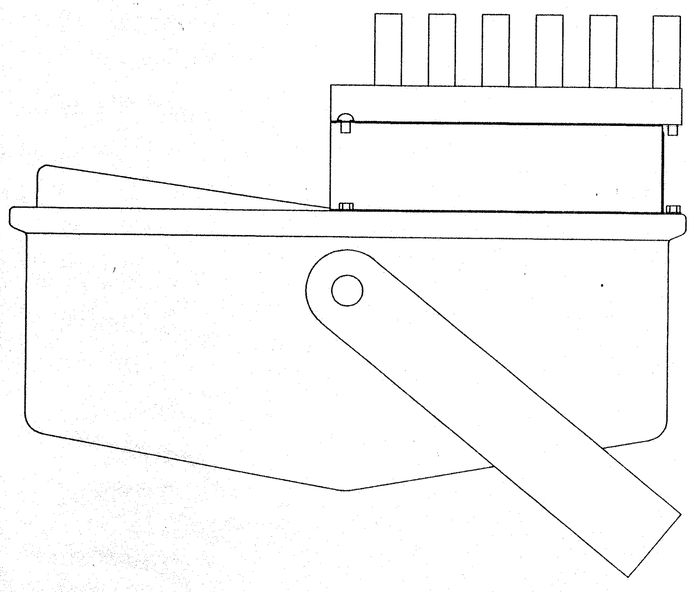

SIDE VIEW

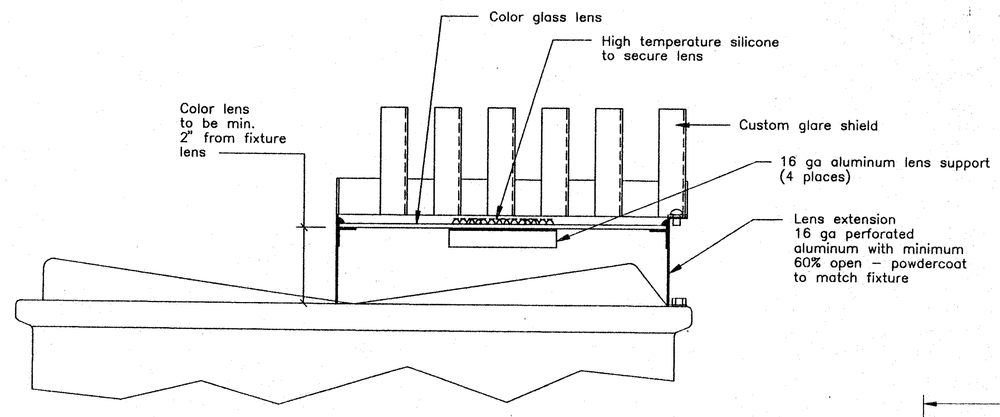

CUTAWAY VIEW

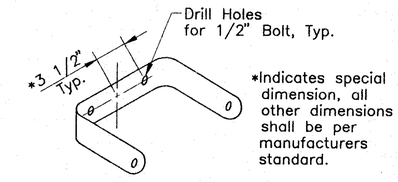

FOR MOUNTING ON CONCRETE

YOKE DETAIL
Not to Scale

TYPICAL LENS HOLDER
SCALE : 1/2" = 1"

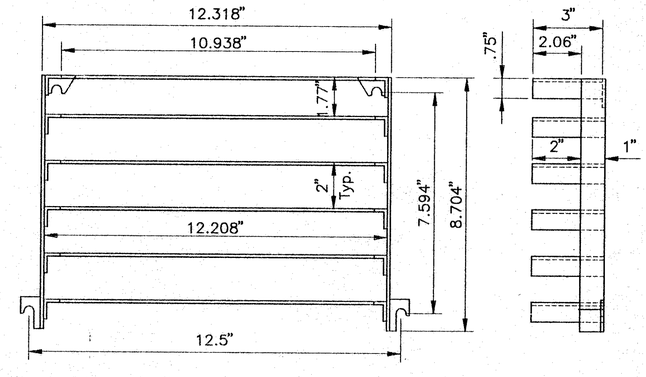

GLARE SHIELD
Not to Scale

NOTE: Dimensions shown may vary as required for this project.

HOWARD NEEDLES TAMMEN & BERGENDOFF
ARCHITECTS ENGINEERS PLANNERS
HNTB

MADE BY: P.J.K. DATE: 5/2/94
DRAWN BY: P.J.K. DATE: 5/4/94
CHECKED BY: N.C.Y. DATE:
SCALE: As Shown

G:\23315\VETMEM\LTMTSP4 1=1

LUMINAIRE MOUNTING DETAILS

FHWA REGION	STATE	PROJECT	
5	OHIO		

131
412

CUYAHOGA COUNTY
CUY – 6 – 14.99

STRUCTURE PLANS INDEX

SHEET NO.	DESCRIPTION	SHEET NO.	DESCRIPTION
1	STRUCTURE PLANS INDEX	138–141	REPLACEMENT END FRAME AT 0 AND 0'
1A	SITE PLAN	142	REPLACEMENT SWAY FRAME AT 1 AND 1'
2–18B	GENERAL NOTES	143	REPLACEMENT SWAY FRAME AT 2 AND 2'
19	ESTIMATED QUANTITIES	144	TRUSS CHORD REPAIR DETAILS
20–21	GEOMETRICS	145–148	REPAIR OF VERTICAL MEMBERS AT FLOORBEAMS
22–23	MEMBER IDENTIFICATION AND REMOVAL PLAN	149–151	REPLACEMENT ARCH BRACES
24–40	ESTIMATED REPAIR QUANTITIES	152–160	LOWER CHORD LATERAL STRUT DETAILS
41	CONSTRUCTION REQUIREMENTS	161–167	LOWER CHORD LATERAL BRACING DETAILS
42	REMOVAL – DETROIT AVE. / W.25 ST. TUNNELS	168–175	LOWER DECK STRUT DETAILS
43–45	REMOVAL DETAILS – WEST SIDE STATION	176–179	LOWER DECK GUSSET PLATE DETAILS
46	REMOVAL DETAILS – TOWER A	180	LOWER DECK LATERAL BRACING DETAILS
47	REMOVAL DETAILS – SPANS 1A AND 1B	181–185	UPPER DECK STRUT DETAILS
48	DECK REMOVAL DETAILS – SPANS 1 THRU 3 AND 5 THRU 11	186–189	UPPER DECK LATERAL BRACING DETAILS
49	DECK REMOVAL DETAILS – SPANS 4,12 AND 13	190	UPPER DECK GUSSET PLATE DETAILS
50	FLOORBEAM REMOVAL DETAILS	191	UPPER CHORD LATERAL BRACING DETAILS
51	JACK ARCH REMOVAL DETAILS	192	MISCELLANEOUS STRUCTURAL STEEL DETAILS
52	COLUMN AND LOWER DECK RAILING REMOVAL DETAILS	192A	NAME PLATE DETAILS–SPAN 4
53	REMOVAL DETAILS – WEST ABUTMENT AND PIER 1	193	UPPER DECK PLAN – SPANS 1A AND 1B
54	REMOVAL DETAILS – PIERS 2 AND 5	194	UPPER DECK DETAILS – SPANS 1A AND 1B
55	REMOVAL DETAILS – PIER 3	195	UPPER DECK PLAN – SPANS 1 AND 9
56	REMOVAL DETAILS – PIER 4	196	UPPER DECK PLAN – SPAN 2
57	REMOVAL DETAILS – PIERS 6 AND 7	197	UPPER DECK PLAN – SPAN 3
58	REMOVAL DETAILS – PIERS 8 AND 9	198	UPPER DECK PLAN – PIERS 3 AND 4
59	REMOVAL DETAILS – PIERS 10 AND 11	199	UPPER DECK PLAN – SPAN 4
60	REMOVAL DETAILS – PIER 12 AND EAST ABUTMENT	200	UPPER DECK PLAN – SPAN 5
61–62	REMOVAL DETAILS – EAST SIDE STATION	201	UPPER DECK PLAN – SPAN 6
63	REMOVAL DETAILS – EAST SIDE SUBWAY	202	UPPER DECK PLAN – SPANS 7 AND 8
64	REPLACEMENT DETAILS – W.25 ST. TUNNEL	203	UPPER DECK PLAN – SPAN 10
65	REPLACEMENT DETAILS – DETROIT AVE. TUNNEL	204	UPPER DECK PLAN – SPANS 11 AND 12
66–70	REPLACEMENT DETAILS – WEST SIDE STATION	205	UPPER DECK PLAN – SPAN 13
71–72	WEST SIDE STATION SIDEWALK AND ROADWAY SLAB DETAILS	206	UPPER DECK DETAILS – SPANS 11, 12 AND 13
73–74	REPLACEMENT DETAILS – TOWER A	207	UPPER DECK PLAN – EAST SIDE STATION
75	REPLACEMENT DETAILS – TOWER B	208–209	DECK SLAB DETAILS – EAST SIDE STATION
76	REPLACEMENT DETAILS – WEST ABUTMENT	210	MISCELLANEOUS DETAILS – EAST SIDE STATION
77	REPLACEMENT DETAILS – PIER 1	211	UPPER DECK PLAN – EAST SIDE SUBWAY
78	REPLACEMENT DETAILS – PIER 2	212	UPPER DECK RAILING – WEST SIDE STATION
79	REPLACEMENT DETAILS – PIER 3	213	UPPER DECK RAILING – SPANS 1A AND 1B
80	REPLACEMENT DETAILS – PIER 4	214	UPPER DECK RAILING – SPANS 1–3 AND 5–10
81	REPLACEMENT DETAILS – PIER 5	215	UPPER DECK RAILING – PIERS 3 AND 4 AND SPAN 4
82	REPLACEMENT DETAILS – PIER 6	216–217	UPPER DECK RAILING – SPANS 11, 12 AND 13
83	REPLACEMENT DETAILS – PIER 7	218–219	UPPER DECK RAILING – EAST SIDE STATION
84	REPLACEMENT DETAILS – PIER 8	220–221	UPPER DECK RAILING –EAST SIDE STATION AND FENCE DETAILS
85	REPLACEMENT DETAILS – PIER 9	222	LIGHT STANDARD DETAILS
86	REPLACEMENT DETAILS – PIER 10	223	SEALING OF CONCRETE SURFACES
87–88	REPLACEMENT DETAILS – PIER 11	224	DECK EXPANSION JOINT DETAILS
89–90	REPLACEMENT DETAILS – PIER 12	225	SIDEWALK EXPANSION JOINT AND CURB PLATE DETAILS
91–92	UPPER PIER AND ABUTMENT SHAFT DETAILS	226–227	DECK OPENING DETAILS – SPAN 4
93–94	LOWER DECK FLOORBEAMS AND CORBELS	228	TOP OF PAVEMENT ELEVATIONS – WEST APPROACH
95–97	LOWER DECK DETAILS – SPANS 1 THRU 3 AND 5 THRU 10	229	TOP OF PAVEMENT ELEVATIONS – EAST APPROACH
98	LOWER DECK DETAILS – PIERS 3 AND 4	230	TOP OF PAVEMENT ELEVATIONS
99–101	LOWER DECK DETAILS – SPAN 4	231	IMPACT ATTENUATOR AND GUARDRAIL DETAILS
102–104	LOWER DECK DETAILS – SPAN 11	231A	SIGN SUPPORT DETAILS
105–107	LOWER DECK DETAILS – SPAN 12	232	UTILITY SUPPORT DETAILS
108–110	LOWER DECK DETAILS – SPAN 13	233–233A	O.B.T. SUPPORT DETAILS
111–112	LOWER DECK RAILING DETAILS	234–240	DRAINAGE DETAILS
113	LOWER DECK RAILING AND RETAINING WALL RAILING DETAIL	241–242A	REINFORCEMENT SCHEDULE – WEST SIDE STATION/TUNNELS
114–115	COLUMN REPLACEMENT DETAILS	243	REINFORCEMENT SCHEDULE – TOWERS A AND B
116	JACK ARCH REPLACEMENT DETAILS	244	REINFORCEMENT SCHEDULE – WEST ABUTMENT/PIERS 1–3
117	UPPER DECK FLOORBEAMS – PIERS AND ABUTMENTS	245	REINFORCEMENT SCHEDULE – PIERS 3, 4, 5 AND 6
118	UPPER DECK FLOORBEAMS – SPANS 1A THRU 2 AND 6 THRU 8	246	REINFORCEMENT SCHEDULE – PIERS 7, 8, 9 AND 10
119	UPPER DECK FLOORBEAMS – SPANS 3 AND 5	247	REINFORCEMENT SCHEDULE – PIERS 11, 12 AND EAST ABUTMENT
120	UPPER DECK FLOORBEAMS – SPANS 11, 12 AND 13	248	REINFORCEMENT SCHEDULE – COLUMNS
121–122	UPPER DECK FLOORBEAMS – EAST SIDE STATION	249	REINFORCEMENT SCHEDULE – COLUMNS AND JACK ARCHES
123	FRAMING PLAN – SPAN 4 UPPER AND LOWER DECKS	250–251	REINFORCEMENT SCHEDULE – JACK ARCHES
124	FRAMING PLAN – SPAN 4 CROSS SECTIONS	252	REINFORCEMENT SCHEDULE – LOWER DECK FLOORBEAMS
125	LOWER DECK STEEL REMOVAL DETAILS	253–257A	REINFORCEMENT SCHEDULE – UPPER DECK FLOORBEAMS
126	REPLACEMENT PINS AND HANGERS	258–259	REINFORCEMENT SCHEDULE – LOWER DECK SLABS
127	FLOORBEAM REPAIR DETAILS	260	REINFORCEMENT SCHEDULE – LOWER DECK SLABS/RAILINGS
128–132	REPLACEMENT AT PANEL POINTS 5 AND 5'	261–266	REINFORCEMENT SCHEDULE – UPPER DECK SLABS
133–135	REPLACEMENT UPPER DECK STRINGERS	266A	REINFORCEMENT SCHEDULE – UPPER DECK SLABS/LIGHTING
136–137	REPLACEMENT LOWER DECK STRINGERS	267–270	REINFORCEMENT SCHEDULE – UPPER DECK RAILINGS

COUNTY BRIDGE NO. 84

HOWARD NEEDLES TAMMEN & BERGENDOFF
ARCHITECTS ENGINEERS PLANNERS
HNTB

STRUCTURE PLANS
INDEX
BR. NO. CUY – 6 – 1499
REHABILITATION OF
VETERANS MEMORIAL BRIDGE
(U.S. 6, 20, 42 & S.R. 3 OVER CUYAHOGA RIVER)
CLEVELAND CUYAHOGA COUNTY OHIO

DRAWN B.E.B.	TRACED B.E.B.	CHECKED A.D.Y.	REVIEWED C.A.B.	REVISED
DATE 6/1/94	DATE 6/1/94	DATE 6/1/94	DATE 6/8/94	SHEET 1 /270

\11646\INDEX

FHWA REGION	STATE	PROJECT	
5	OHIO		

132/412

CUYAHOGA COUNTY

CUY – 6 – 14.99

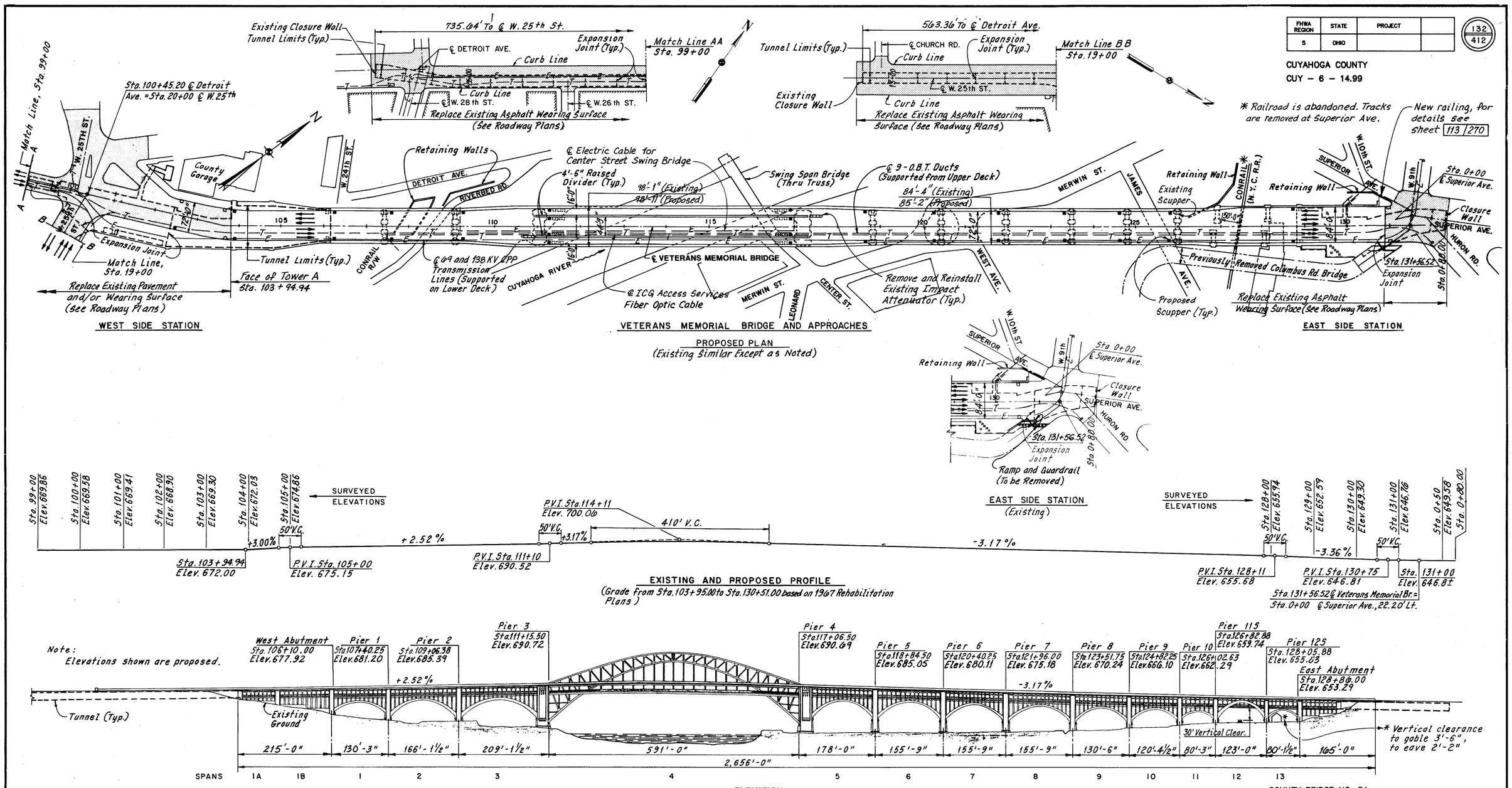

COUNTY BRIDGE NO. 84

EXISTING STRUCTURE

Superstructure Type:

Main Span: Three hinged steel arch supporting a double deck roadway consisting of steel columns, floorbeams, stringers and a reinforced concrete upper deck.

Approach Spans: Concrete arch spans supporting a double deck roadway consisting of reinforced concrete columns, floobeams and decks.

Tunnels: Reinforced concrete slabs and walls.

Substructure Type:

Piers: Reinforced concrete piers with arch ribs, walls and columns.

Abutments: Reinforced deep concrete abutments with arch ribs, walls and columns.

Spans:

Main: 591'-0"

West Approach: 130'-3", 166'-1-1/2" and 209'- 1-1/2"

East Approach: 178'-0", 3 @ 155'-9", 130-'6", 120'-4-1/2", 80'-3", 123'-0" and 80'-1-1/2"

Roadway:

Main: 44'-5" F/F of 4'-6" medians with two adjacent roadways 16'-0" F/F of curbs, and two 5'-0" sidewalks.

Approaches: Varies 72'-0" min. to 85'-9" max. F/F of curbs and two 5'-0" sidewalks.

Skew: None

Alignment: Tangent

Loadings:

Upper Deck: Slab: CF2000. Other Members: S-20-60 (lower chord overstressed 14.8% max.).

Lower Deck: 6 tracks each with two 60 ton cars.

Wearing Course: 2-1/2" asphaltic wearing surface.

Approach Slabs: None

Superelevation: Normal crown - 3/16" per ft.

Year Built: 1917 (Rehabilitated 1967)

Structure File Number: 1800932

PROPOSED STRUCTURE

The existing structure data shall be maintained except as follows:

Loadings:

Upper Deck: HS20-44 Case II (Span 4 Truss lower chord overstressed 6.3% maximum with 30 psf future wearing surface)

Lower Deck: One 8 ton vehicle with 10% impact, 100 psf, or a 6 ton manlift with a 136.5% increase in allowable stress, whichever controls.

Wearing Course: 1" monolithic concrete wearing surface

Year Built: 1917 (Rehabilitated 1967, 1994)

HOWARD NEEDLES TAMMEN & BERGENDOFF
ARCHITECTS ENGINEERS PLANNERS
HNTB

SITE PLAN

BR. NO. CUY – 6 – 1499

REHABILITATION OF VETERANS MEMORIAL BRIDGE

(U.S. 6, 20, 42 & S.R. 3 OVER CUYAHOGA RIVER)

CLEVELAND CUYAHOGA COUNTY OHIO

DRAWN F.S.J.	TRACED C.P.	CHECKED R.A.S.	REVIEWED C.A.B.	REVISED
DATE 5/20/88	DATE 5/31/88	DATE 9/21/88	DATE 9/23/88	SHEET 1A/270

GENERAL NOTES - STRUCTURES OVER 20-FT SPAN

FHWA REGION	STATE	PROJECT	
5	OHIO		

133/412

CUYAHOGA COUNTY
CUY - 6 - 14.99

1. PROPOSED WORK

THE VETERANS MEMORIAL BRIDGE OVER THE CUYAHOGA RIVER SHALL BE REHABILITATED UNDER THIS CONTRACT. MAJOR ITEMS OF WORK CONTAINED IN THE STRUCTURE PLANS ARE SUMMARIZED BELOW. DETAILS OF ALL WORK ARE SHOWN IN THE PLANS.

A. CONCRETE SPANS

1. REMOVE AND REPLACE THE ENTIRE UPPER DECK, DECK JOINTS, DRAINAGE SYSTEM, SIDEWALKS AND RAILING.

2. REMOVE THE ENTIRE LOWER DECK AND PLACE NEW DECKING AS SPECIFIED.

3. REPLACE PORTIONS OF ALL PIERS AND ABUTMENTS.

4. AT PIERS AND ABUTMENTS WITH DOUBLE UPPER DECK EXPANSION JOINTS REMOVE AND REPLACE FLOORBEAMS AND COLUMNS AND MODIFY UPPER DECK FRAMING TO ELIMINATE ONE OF THE TWO UPPER DECK EXPANSION JOINTS.

5. REMOVE AND REPLACE OR REPAIR DETERIORATED CONCRETE STRUCTURAL ELEMENTS.

6. PROVIDE A CONCRETE COATING TO THE SURFACES OF CONCRETE ELEMENTS AS SPECIFIED.

B. STEEL SPAN

1. REMOVE AND REPLACE THE ENTIRE UPPER DECK, DECK JOINTS, DRAINAGE SYSTEM, SIDEWALKS AND RAILING.

2. REMOVE LOWER DECK TIMBERS AND INSTALL NEW CATWALKS AND STEEL GRID DECKING.

3. REMOVE AND REPLACE TWO (2) UPPER AND LOWER DECK FLOORBEAMS.

4. REMOVE AND REPLACE ALL PIN AND HANGER ASSEMBLIES.

5. REMOVE AND REPLACE OR REPAIR DETERIORATED STRUCTURAL STEEL MEMBERS.

6. PAINT ALL STRUCTURAL STEEL.

C. WEST APPROACH TUNNELS AND STATION

1. REMOVE AND REPLACE WEST STATION SIDEWALKS, CURBS, RAILINGS AND DRAINAGE SYSTEM.

2. REMOVE AND REPLACE DETERIORATED ROOF SLAB AT EXPANSION AND CONSTRUCTION JOINTS AND AT OTHER SPECIFIED AREAS.

3. WATERPROOF WEST STATION ROOF SLAB AS SPECIFIED.

4. REMOVE AND REPLACE OR REPAIR DETERIORATED OR DAMAGED CONCRETE STRUCTURAL ELEMENTS AS SPECIFIED.

D. EAST APPROACH TUNNEL

1. FILL EASTERNMOST END OF EAST SUBWAY.

2. REMOVE AND REPLACE THE ENTIRE ROOF SLAB.

3. REMOVE AND REPLACE OR REPAIR DETERIORATED CONCRETE STRUCTURAL ELEMENTS.

UNLESS OTHERWISE SPECIFIED IN THE GENERAL NOTES REFERRAL TO THE STRUCTURE WILL INCLUDE THE APPROACH TUNNELS AND STATION AREAS AS WELL AS THE BRIDGE.

2. DESIGN SPECIFICATIONS

THIS STRUCTURE CONFORMS TO THE "STANDARD SPECIFICATIONS FOR HIGHWAY BRIDGES ADOPTED BY THE AMERICAN ASSOCIATION OF STATE HIGHWAY AND TRANSPORTATION OFFICIALS, 1992, INCLUDING THE 1993 INTERIM SPECIFICATIONS AND THE ODOT BRIDGE DESIGN MANUAL.

3. DESIGN LOADING

UPPER DECK:

HS20-44, CASE II (SPAN 4 TRUSS LOWER CHORD OVERSTRESSED 6.3% MAXIMUM WITH 30 PSF FUTURE WEARING SURFACE.)

LOWER DECK:

ONE 8-TON VEHICLE WITH 10% IMPACT, 100 PSF, OR A 6-TON MANLIFT WITH A 136.5% INCREASE IN ALLOWABLE STRESS, WHICHEVER IS GREATER.

4. DESIGN STRESSES (FOR NEW CONSTRUCTION)

CONCRETE CLASS S - UNIT STRESS 1,500 PSI, COMPRESSIVE STRENGTH 4,500 PSI (SUPERSTRUCTURE)

LIGHTWEIGHT CONCRETE CLASS S - COMPRESSIVE STRENGTH 4,500 PSI (SUPERSTRUCTURE)

CONCRETE CLASS C - UNIT STRESS 1,333 PSI (SUBSTRUCTURE)

REINFORCING STEEL - ASTM A615, A616 OR A617
GRADE 60 - UNIT STRESS 24,000 PSI

STRUCTURAL STEEL - ASTM A36 - UNIT STRESS 20,000 PSI
HANGERS - ASTM A572 - UNIT STRESS 27,000 PSI

5. REFERENCE DRAWINGS

REFERENCE SHALL BE MADE TO STANDARD DRAWINGS:

EXJ-4-87 DATED 1-20-94 (SHEETS 1 THRU 5 OF 5)
GR-1.1 DATED 5-6-91
GR-1.2 REVISED 10-30-92
BP-2.2 DATED 2-21-92
TC-21.20 REVISED 9-1-92
TC-83.20 REVISED 1-20-84

6. SUPPLEMENTAL SPECIFICATIONS

REFERENCE SHALL BE MADE TO SUPPLEMENTAL SPECIFICATIONS:

852 DATED 6-10-87	1001 DATED 10-2-89
910 DATED 5-20-91	1002 DATED 9-26-86
927 DATED 10-19-81	1011 DATED 1-17-89
933 DATED 2-10-87	1042 DATED 2-10-87
944 DATED 3-18-92	

7. DECK PROTECTION METHOD

EPOXY COATED REINFORCING STEEL, 2-1/2" CONCRETE COVER FOR TOP MAT OF UPPER DECK. MONOLITHIC WEARING SURFACE ON UPPER DECK IS ASSUMED, FOR DESIGN PURPOSES, TO BE 1" THICK. PENETRATING SEALER APPLIED TO UPPER DECK.

8. UTILITIES

INFORMATION SHOWN IN THE PLANS CONCERNING TYPE AND LOCATION OF UNDERGROUND UTILITIES IS NOT GUARANTEED TO BE ACCURATE OR ALL INCLUSIVE. THE CONTRACTOR IS RESPONSIBLE FOR MAKING HIS OWN DETERMINATION AS TO THE TYPE AND LOCATION OF UNDERGROUND UTILITIES AS MAY BE NECESSARY TO AVOID DAMAGE THERETO.

ANY EXISTING, PRIVATELY-OWNED UTILITY FACILITIES ENCOUNTERED AT THE SITE OF THE WORK WHICH WILL INTERFERE WITH PORTIONS OF THE FINISHED ROADWAYS OR STRUCTURES SHALL BE REMOVED OR RELOCATED BY THE OWNER, EXCEPT AS OTHERWISE SPECIFIED IN THE PLANS. ALL EXPENSES INVOLVED IN RELOCATING THE AFFECTED UTILITY LINES SHALL BE BORNE BY THE OWNER. THE CONTRACTOR AND OWNER ARE REQUESTED TO COOPERATE BY ARRANGING THEIR WORK IN SUCH A MANNER THAT INCONVENIENCE TO EITHER WOULD BE HELD TO A MINIMUM.

AT LEAST TWO WORKING DAYS PRIOR TO COMMENCING CONSTRUCTION OPERATIONS IN AN AREA WHICH MAY INVOLVE UNDERGROUND UTILITY FACILITIES, THE CONTRACTOR SHALL NOTIFY THE PROJECT ENGINEER, THE REGISTERED UTILITY PROTECTION SERVICE AND THE OWNERS OF EACH UNDERGROUND UTILITY FACILITY SHOWN IN THE PLANS (SEE ROADWAY PLANS).

9. DIMENSIONS

DIMENSIONS ARE MEASURED HORIZONTALLY AND AT 60° F UNLESS OTHERWISE SPECIFIED.

10. PLANS OF EXISTING BRIDGE

CONSTRUCTION PLANS OF THE ORIGINAL STRUCTURE (DATED 1914 THROUGH 1917) AND OF THE PREVIOUS REHABILITATION (DATED 1966) ARE ON FILE AT THE CUYAHOGA COUNTY ENGINEER'S OFFICE, 1370 ONTARIO STREET, CLEVELAND, OHIO AND ARE AVAILABLE FOR REFERENCE. STRUCTURAL ELEMENTS REFERRED TO IN THE PLANS AS "PREVIOUSLY REPLACED" REFER TO MEMBERS REPLACED IN THE PREVIOUS REHABILITATION.

11. EXISTING STRUCTURE VERIFICATION

DETAILS AND DIMENSIONS SHOWN ON THESE PLANS PERTAINING TO THE EXISTING STRUCTURE HAVE BEEN OBTAINED FROM PLANS OF THE EXISTING STRUCTURE AND FROM FIELD OBSERVATIONS AND MEASUREMENTS. CONSEQUENTLY, THEY ARE INDICATIVE OF THE EXISTING STRUCTURE AND THE PROPOSED WORK, BUT THEY SHALL BE CONSIDERED TENTATIVE AND APPROXIMATE. THE CONTRACTOR IS REFERRED TO CMS SECTIONS 102.05, 105.02, AND 513.02.

CONTRACT BID PRICES SHALL BE BASED UPON A RECOGNITION OF THE UNCERTAINTIES DESCRIBED ABOVE AND UPON A PREBID EXAMINATION OF THE EXISTING STRUCTURE BY THE CONTRACTOR. HOWEVER, ALL PROJECT WORK SHALL BE BASED UPON ACTUAL DETAILS AND DIMENSIONS WHICH HAVE BEEN VERIFIED BY THE CONTRACTOR IN THE FIELD.

12. MAINTENANCE OF TRAFFIC

THE BRIDGE WILL BE CLOSED TO VEHICULAR AND PEDESTRIAN TRAFFIC. FOR COORDINATION REQUIREMENTS WITH THE RECENTLY ESTABLISHED DETOUR ROUTES AND FOR MAINTENANCE OF TRAFFIC DETAILS OVER THE BRIDGE TUNNEL AREAS AT WEST 25TH STREET, DETROIT AVENUE AND AT THE INTERSECSECTION AT THE EAST END OF THE BRIDGE, REFER TO THE ROADWAY PLANS.

13. WORK IN AND OVER THE CUYAHOGA RIVER

ALL CONSTRUCTION OPERATIONS IN AND OVER THE CUYAHOGA RIVER SHALL CONFORM TO THE REQUIREMENTS OF THE U.S. COAST GUARD.

THE CONTRACTOR SHALL NOTIFY THE COMMANDER, NINTH COAST GUARD DISTRICT, BRIDGE BRANCH, 1240 E. NINTH STREET, CLEVELAND, OHIO 44199 (TELEPHONE, 216-522-3993), TEN DAYS IN ADVANCE OF COMMENCEMENT OF WORK IN AND ABOVE THE RIVER SO THAT NAVIGATION INTERESTS MAY BE NOTIFIED OF THE PRESENCE OF CONSTRUCTION EQUIPMENT. THE CONTRACTOR SHALL NOTIFY THE SAME OFFICE WHEN THE WORK IS COMPLETED. THE CONTRACTOR SHALL PROVIDE AND MAINTAIN NAVIGATION LIGHTS AND OTHER NAVIGATION SIGNALS OR FACILITIES WHICH MAY BE REQUIRED BY THE U.S. COAST GUARD ON TEMPORARY CONSTRUCTION OR VESSELS. NO SEPARATE PAYMENT WILL BE MADE FOR MEETING THE U.S. COAST GUARD REQUIREMENTS. ALL COSTS SHALL BE INCLUDED WITH THE APPROPRIATE BID ITEMS.

14. INSPECTION OF EXISTING STRUCTURE

THE CONTRACTOR SHALL PROVIDE ALL NECESSARY MATERIAL, EQUIPMENT AND LABOR, TO PERMIT, CLOSE-UP INSPECTION OF ALL ELEMENTS (STEEL MEMBERS OR CONCRETE MEMBERS) SCHEDULED TO REMAIN. THE CONTRACTOR SHALL CLEAN EXISTING MEMBERS, AS REQUIRED, TO THE SATISFACTION OF THE ENGINEER TO PERMIT ACCURATE INSPECTION.

14A. CONSTRUCTION PROCEDURES

THE CONTRACTOR SHALL SUBMIT ALL PROPOSED REMOVAL AND REPLACEMENT PROCEDURES TO THE ENGINEER FOR APPROVAL. THE PROCEDURES SHALL INCLUDE PROPOSED METHODS, ORDER OF OPERATION, EQUIPMENT AND DETAILS OF ANY REQUIRED TEMPORARY SHORING. ALL SUBMITTALS SHALL BE SEALED BY A PROFESSIONAL ENGINEER REGISTERED IN THE STATE OF OHIO AND BE SUBMITTED A MINIMUM OF FOUR WEEKS PRIOR TO INTENDED DATE FOR COMMENCEMENT OF WORK. ALL COSTS FOR THIS WORK SHALL BE INCLUDED WITH THE APPROPRIATE BID ITEMS.

COUNTY BRIDGE NO. 84

HOWARD NEEDLES TAMMEN & BERGENDOFF
ARCHITECTS ENGINEERS PLANNERS
HNTB

GENERAL NOTES
BR. NO. CUY - 6 - 1499
REHABILITATION OF
VETERANS MEMORIAL BRIDGE
(U.S. 6, 20, 42 & S.R. 3 OVER CUYAHOGA RIVER)
CLEVELAND CUYAHOGA COUNTY OHIO

DRAWN	TRACED	CHECKED	REVIEWED	REVISED
B.E.B.	B.F.	A.D.Y.	C.A.B.	
DATE 3/22/94	DATE 3/28/94	DATE 3/30/94	DATE 3/31/94	SHEET 2 /270

GENERAL NOTES - STRUCTURES OVER 20-FT SPAN

FHWA REGION	STATE	PROJECT	
5	OHIO		

134/412

CUYAHOGA COUNTY
CUY - 6 - 14.99

THE CONTRACTOR'S SUPERINTENDENT SHALL ACCOMPANY THE ENGINEER IN MAKING A DETAILED INSPECTION AND MARKING THE AREAS OF REPAIRS TO BE MADE. DURING THIS INSPECTION THE CONTRACTOR SHALL SOUND ALL CONCRETE SURFACES. PAINT FOR MARKING OF THE REPAIRS SHALL BE FURNISHED BY THE CONTRACTOR.

THE INSPECTION OF AN ELEMENT SHALL BE PERFORMED A MINIMUM OF ONE WEEK PRIOR TO COMMENCING WORK ON THE ELEMENT. EXTERIOR ABUTMENT AND PIER SHAFTS ABOVE THE LOWER DECK SHALL NOT BE INSPECTED UNTIL THE UPPER DECK COLUMNS AT THESE SHAFTS HAVE BEEN REMOVED TO PERMIT INSPECTION OF AREAS CONCEALED BEHIND THESE COLUMNS. THE MATERIAL, EQUIPMENT AND LABOR SHALL BE FURNISHED FOR WHATEVER LENGTH OF TIME MAY BE NECESSARY TO COMPLETE THE INSPECTION.

INSPECTION OF THE EXISTING STRUCTURE WILL BE PAID FOR AT THE CONTRACT LUMP SUM BID FOR ITEM SPECIAL, INSPECTION OF EXISTING STRUCTURE. THIS PRICE SHALL BE PAYMENT IN FULL FOR ALL MATERIAL, EQUIPMENT AND LABOR NECESSARY TO COMPLETE THE WORK.

14A. SEE SHEET 2/270

15. ITEM 202 - PORTIONS OF STRUCTURES REMOVED, AS PER PLAN

A. DESCRIPTION

THIS ITEM SHALL CONSIST OF FURNISHING THE NECESSARY MATERIAL, EQUIPMENT AND LABOR TO REMOVE AND DISPOSE OF DESIGNATED PORTIONS OF THE EXISTING STRUCTURE TO THE LIMITS SHOWN ON THE PLANS OR TO THE LIMITS DIRECTED BY THE ENGINEER. ALL APPLICABLE PROVISIONS OF ITEM 202 SHALL APPLY EXCEPT AS MODIFIED HEREIN. PORTIONS OF THE STRUCTURE INCLUDED FOR PAYMENT UNDER THIS ITEM INCLUDE:

1. ENTIRE UPPER DECK (FROM EXPANSION JOINT AT TOWER A, STA. 103+95± THROUGH EXPANSION JOINT AT FLOORBEAM E.S., 21 STA. 130+91±) INCLUDING WEARING SURFACE, RAILINGS, SIDEWALKS, PARAPETS, DECK JOINTS, CURBS, HAUNCHES TO THE LIMITS SHOWN IN THE PLANS AND ALL OTHER MISCELLANEOUS ITEMS ASSOCIATED WITH THE DECK.

2. ENTIRE LOWER DECK (FROM CENTERLINE FLOORBEAM 1B, 12 STA. 106+05± TO CENTERLINE FLOORBEAM E.S., 1 STA. 128+91±) INCLUDING ALL CONCRETE CURBS, LOWER DECK OVER PIERS 3 AND 4 AND ALL LOWER DECK TIMBER AND NAVIGATION LIGHT WALKWAYS ON SPAN 4.

3. WEST STATION ROADWAY LEVEL RAILINGS, SIDEWALKS AND CURBS.

4. EARTH FILL, SIDEWALK SUBBASE, AND PAVEMENT ATOP WEST STATION ROOF SLAB.

5. LOWER DECK FILL IN WEST STATION.

6. LOWER DECK SLAB IN WEST STATION ADJACENT TO TOWER A.

7. FOOTING OF WEST STATION SOUTH WALL.

8. ENTIRE BRIDGE DRAINAGE SYSTEM.

9. ENTIRE ROOF SLAB OF EAST SUBWAY.

10. STEEL GRID DECKING AND STEEL BEAMS AND COLUMNS AT THE END OF THE EAST SUBWAY.

11. ALL STEEL OR CONCRETE MEMBERS DESIGNATED TO BE REMOVED BUT NOT REPLACED.

12. ALL EXISTING TEMPORARY DEBRIS CATCHING PLATFORMS LOCATED ON THE STRUCTURE.

13. EXISTING UTILITY PLATFORMS BENEATH THE LOWER DECK OF PIERS 3 AND 4.

14. HANDICAPPED RAMP INCLUDING RAILINGS AND GUARDRAIL AT THE FORMER COLUMBUS ROAD RAMP.

15. REMAINING LOWER DECK FALSEWORK BENEATH SPAN 1A.

16. EAST STATION ROADWAY AND PAVEMENT, SIDEWALK AND BACKFILL.

17. ALL OTHER MISCELLANEOUS ITEMS AS NOTED IN THE PLANS AND NOT INCLUDED ELSEWHERE FOR PAYMENT.

THERE ARE EXISTING TEMPORARY STEEL SUPPORTS AT VARIOUS LOCATIONS THROUGHOUT THE STRUCTURE. THE SUPPORTS SHALL BE REMOVED BY THE CONTRACTOR AND SHALL BECOME THE PROPERTY OF THE COUNTY OF CUYAHOGA. THE CONTRACTOR SHALL STORE THESE SUPPORTS AT THE SITE IN AN AREA AS APPROVED BY THE CUYAHOGA COUNTY ENGINEER WHO SHALL BE RESPONSIBLE FOR REMOVING THEM FROM THE SITE.

B. GENERAL

WHEN NO LONGER NEEDED TO MAINTAIN TRAFFIC, THE CONTRACTOR SHALL REMOVE PORTIONS OF THE EXISTING STRUCTURE IN THE ORDER NOTED ON AN APPROVED CONSTRUCTION SEQUENCE.

THE CONTRACTOR SHALL BE RESPONSIBLE FOR MAINTAINING A COMPLETELY SAFE AND STABLE STRUCTURE AT ALL TIMES. THE REMOVAL SEQUENCE AT THE APPROACH TUNNELS AND AT THE EAST SUBWAY SHALL BE STAGED IN COORDINATION WITH THE MAINTENANCE OF TRAFFIC PLANS. THE REMOVAL SEQUENCE OF THE UPPER AND LOWER DECKS SHALL MEET THE CONSTRUCTION REQUIREMENTS SPECIFIED IN THE PLANS.

REMOVAL OF STRUCTURAL ELEMENTS SHALL BE BY METHODS OF THE CONTRACTOR'S SELECTION EXCEPT AS SPECIFIED HEREIN AND SHALL BE SUBJECT TO APPROVAL BY THE ENGINEER. THE CONTRACTOR SHALL PROTECT ALL EXISTING FACILITIES UNDER THE BRIDGE DURING DEMOLITION. DEBRIS SHALL NOT BE PERMITTED TO DROP TO THE GROUND UNLESS AUTHORIZED BY THE ENGINEER. ALL DAMAGES TO ADJACENT FACILITIES OR TO PORTIONS OF THE STRUCTURE SCHEDULED TO REMAIN SHALL BE REPAIRED AND/OR RESTORED TO THEIR ORIGINAL CONDITION TO THE SATISFACTION OF THE ENGINEER AND AT THE EXPENSE OF THE CONTRACTOR.

C. PROTECTION OF TRAFFIC

PRIOR TO DEMOLITION OF ANY PORTIONS OF THE PROPERTY AND STRUCTURE, THE CONTRACTOR SHALL SUBMIT HIS PLANS FOR THE PROTECTION OF TRAFFIC (VEHICULAR, PEDESTRIAN, BOAT, ETC.) ADJACENT TO AND UNDER THE STRUCTURE TO THE ENGINEER FOR APPROVAL. THESE PLANS SHALL INCLUDE PROVISIONS FOR ANY DEVICES AND STRUCTURES THAT MAY BE NECESSARY TO ENSURE SUCH PROTECTION. TEMPORARY VERTICAL CLEARANCES SPECIFIED ON THE PLANS OR IN THE PROPOSAL SHALL BE MAINTAINED AT ALL TIMES EXCEPT AS OTHERWISE APPROVED BY THE ENGINEER.

D. LOADING LIMITATIONS:

NO PART OF THE STRUCTURE SHALL BE SUBJECTED TO UNIT STRESSES THAT EXCEED 136.5% OF THE ALLOWABLE UNIT STRESSES GIVEN IN THE AASHTO STANDARD SPECIFICATIONS FOR HIGHWAY BRIDGES DUE EITHER TO DEMOLITION, ERECTION OR CONSTRUCTION METHODS, OR TO THE USE OR MOVEMENT OF DEMOLITION OR ERECTION EQUIPMENT ON OR ACROSS THE STRUCTURE. FOR ALL LOADINGS IN EXCESS OF 40 KIPS INCLUDING CARGO WEIGHT, OR LOADINGS TO BE APPLIED TO THE NEW LOWER DECK SLAB IN EXCESS OF THE DESIGN LOADING THE CONTRACTOR SHALL FURNISH STRUCTURAL ANALYSIS COMPUTATIONS, BY A REGISTERED PROFESSIONAL ENGINEER, SHOWING THE ALLOWABLE STRESSES AND THE MAXIMUM STRESSES PRODUCED BY THE CONTRACTOR'S METHODS OR EQUIPMENT SHALL BE SUBMITTED TO THE ENGINEER FOR REVIEW AND APPROVAL AT LEAST TWO WEEKS PRIOR TO THE START OF THE WORK WHICH MIGHT AFFECT THE STRUCTURE.

E. CONCRETE REMOVAL:

DECK CONCRETE SHALL BE REMOVED BY SAWCUTTING AND/OR MEANS OF HAND OPERATED PNEUMATIC HAMMERS EMPLOYING POINTED OR BLUNTED CHISEL TYPE TOOLS. THE USE OF EXPLOSIVES IS PROHIBITED. HEADACHE BALLS AND HOE RAM TYPE OF EQUIPMENT WILL NOT BE PERMITTED FOR DECK REMOVAL. THIS REMOVAL EQUIPMENT CAN BE USED ELSEWHERE AS APPROVED BY THE ENGINEER. THE WEIGHT OF HAMMERS SHALL NOT BE MORE THAN 35 POUNDS FOR REMOVAL WITHIN 18-INCHES OF PORTIONS TO BE PRESERVED. OUTSIDE THE 18-INCH LIMIT, HAMMERS HEAVIER THAN 35 POUNDS, BUT NOT TO EXCEED 90 POUNDS, MAY BE USED AT THE APPROVAL OF THE ENGINEER. PNEUMATIC HAMMERS SHALL NOT BE PLACED IN DIRECT CONTACT WITH REINFORCING STEEL THAT IS TO BE RETAINED IN THE REBUILT STRUCTURE.

FOR REMOVALS ABOVE STEEL STRINGERS, A HAMMER HEAVIER THAN 35 POUNDS, BUT NOT TO EXCEED 90 POUNDS, MAY BE USED AT THE APPROVAL OF THE ENGINEER TO INSURE ADEQUATE DEPTH CONTROL AND TO PREVENT NICKING OR GOUGING THE STRINGERS.

BEFORE DECK SLAB CUTTING IS PERMITTED, THE OUTLINE OF SUPPORTING MEMBERS (FLOORBEAMS, STRINGERS, JACK ARCHES, ETC.) IN CONTACT WITH THE BOTTOM OF THE DECK SHALL BE DRAWN ON THE SURFACE OF THE DECK. SMALL DIAMETER PILOT HOLES SHALL BE DRILLED 2 INCHES OUTSIDE THESE LINES TO CONFIRM THE LOCATION OF MEMBER EDGES. DECK CUTS OVER OR WITHIN 2 INCHES OF STEEL STRINGER FLANGE EDGES SHALL NOT EXTEND LOWER THAN THE BOTTOM LAYER OF DECK SLAB REINFORCING STEEL. DECK CUTS SHALL NOT BE MADE OVER OR WITHIN 2 INCHES OF CONCRETE FLOORBEAMS. DURING THE CUTTING OF THE DECK SLAB, CARE SHALL BE TAKEN NOT TO DAMAGE SUPPORTING MEMBERS THAT ARE TO BE INCORPORATED INTO THE PROPOSED STRUCTURE.

DUE TO THE POSSIBLE PRESENCE OF WELDED ATTACHMENTS TO EXISTING STEEL STRINGERS OF SPAN 4 (FINISHING MACHINE, SCUPPER, BULB ANGLE, AND FORM SUPPORTS, ETC.), CARE SHALL BE TAKEN DURING DECK REMOVAL TO AVOID DAMAGING STRINGERS WHICH ARE TO REMAIN. STRINGERS DAMAGED BY THE CONTRACTOR'S REMOVAL OPERATIONS SHALL, AT NO COST TO THE PROJECT, BE REPLACED OR REPAIRED. PROPOSED REPAIRS, DEVELOPED BY A REGISTERED PROFESSIONAL ENGINEER, SHALL BE SUBMITTED IN WRITING FOR REVIEW AND APPROVAL BY THE ENGINEER. ANY WELDED ATTACHMENTS ENCOUNTERED SHALL BE REMOVED AND THE SURFACE REMAINING SHALL BE GROUND SMOOTH.

F. CONSTRUCTION JOINT PREPARATION

SAW CUT BOUNDARIES OF PROPOSED CONCRETE REMOVALS 1" DEEP, OR TO THE DEPTH OF THE EXISTING REINFORCING STEEL, WHICHEVER IS LESS. REMOVE CONCRETE TO A ROUGH SURFACE. THE EXISTING REINFORCING STEEL WHERE REQUIRED IN THE PLANS OR AS DIRECTED BY THE ENGINEER SHALL BE LEFT IN PLACE. PRIOR TO CONCRETE PLACEMENT, ABRASIVELY CLEAN JOINT SURFACE AND EXPOSED REINFORCEMENT TO REMOVE LOOSE AND DISINTEGRATED CONCRETE AND LOOSE RUST. THEN, THE JOINT SURFACE AND EXPOSED REINFORCEMENT SHALL BE THOROUGHLY CLEANED OF ALL DIRT, DUST, OR OTHER FOREIGN MATERIAL BY THE USE OF WATER, AIR UNDER PRESSURE, OR OTHER METHODS THAT PRODUCE SATISFACTORY RESULTS. CONCRETE BONDING SURFACES SHALL BE WET WITHOUT FREE WATER AS CONCRETE IS PLACED.

REINFORCING STEEL WHICH IS CUT FLUSH TO A CONCRETE REMOVAL SURFACE AND IS NOT TO BE COVERED WITH NEW CONCRETE SHALL BE RECESSED A MINIMUM OF ONE INCH BELOW THE SURFACE OF CONCRETE. THE RESULTING HOLE SHALL BE FILLED WITH A NONSHRINKING EPOXY MORTAR MEETING THE REQUIREMENTS OF 705.20.

AT LOCATIONS WHERE SHEAR KEYS ARE SPECIFIED, THE CONTRACTOR MAY PROPOSE ALTERNATE INTERLOCKING METHODS THAN THE KEYS, SUCH AS DOWELING OR EPOXY INJECTION OF THE CONSTRUCTION JOINTS. ALL PROPOSED METHODS ARE SUBJECT TO APPROVAL OF THE ENGINEER, AND AT NO INCREASE IN PROJECT COST.

G. DUST CONTROL

WHEN SO DIRECTED BY THE ENGINEER, THE CONTRACTOR SHALL WET DOWN CONCRETE THOROUGHLY DURING REMOVAL OPERATIONS TO PREVENT SPREAD OF DUST. ALL NECESSARY LABOR, EQUIPMENT AND MATERIAL SHALL BE PROVIDED BY THE CONTRACTOR.

COUNTY BRIDGE NO. 84

HOWARD NEEDLES TAMMEN & BERGENDOFF
ARCHITECTS ENGINEERS PLANNERS
HNTB

GENERAL NOTES
BR. NO. CUY - 6 - 1499
REHABILITATION OF
VETERANS MEMORIAL BRIDGE
(U.S. 6, 20, 42 & S.R. 3 OVER CUYAHOGA RIVER)
CLEVELAND CUYAHOGA COUNTY OHIO

DRAWN B.E.B.	TRACED B.F.	CHECKED A.D.Y.	REVIEWED C.A.B.	REVISED
DATE 3/22/94	DATE 3/28/94	DATE 3/30/94	DATE 3/31/94	SHEET 3 /270

GENERAL NOTES - STRUCTURES OVER 20-FT SPAN

FHWA REGION	STATE	PROJECT	
5	OHIO		

135/412

CUYAHOGA COUNTY
CUY - 6 - 14.99

H. DRAINAGE AND STRUCTURAL STEEL REMOVAL

THE DRAINAGE SYSTEM AND STRUCTURAL STEEL MEMBERS DESIGNATED TO BE REMOVED AND NOT REPLACED SHALL BE REMOVED IN THEIR ENTIRETY, INCLUDING CONNECTIONS TO THE REMAINING STRUCTURE, UNLESS OTHERWISE SPECIFIED IN THE PLANS. FASTENER REMOVAL SHALL BE IN ACCORDANCE WITH ITEM SPECIAL, REPLACE EXISTING FASTENERS WITH NEW HIGH STRENGTH BOLTS.

I. DISPOSAL OF REMOVED MATERIAL

ALL STRUCTURAL STEEL, CONCRETE, REINFORCING STEEL, PIPES, WOOD, ETC. REMOVED BY THE CONTRACTOR SHALL BECOME HIS PROPERTY, EXCEPT AS NOTED, AND SHALL BE REMOVED BY HIM FROM THE SITE. UNDER NO CIRCUMSTANCES SHALL THE MATERIAL BE PERMITTED TO REMAIN ON THE PREMISES, RIGHT-OF-WAY OR STREETS PENDING DISPOSAL OF SAME OR FOR ANY OTHER PURPOSES, UNLESS APPROVED BY THE ENGINEER.

J. PAYMENT

THIS WORK WILL BE PAID FOR AT THE CONTRACT LUMP SUM PRICE BID, WHICH PRICE AND PAYMENT SHALL BE FULL COMPENSATION FOR ALL LABOR, EQUIPMENT, MATERIALS AND INCIDENTALS NECESSARY TO COMPLETE THE WORK IN CONFORMANCE WITH THESE REQUIREMENTS, WITH PERTINENT PROVISIONS OF 202, AND TO THE SATISFACTION OF THE ENGINEER.

16. ITEM SPECIAL - TEMPORARY SHORING, BRACING AND PROTECTIVE STRUCTURES

A. GENERAL

THIS WORK SHALL CONSIST OF CONSTRUCTING, MAINTAINING AND REMOVING TEMPORARY CONSTRUCTIONS AS NOTED IN THE PLANS, REQUIRED TO COMPLETE THE PERMANENT WORK EXCLUSIVE OF FORMWORK, SHORING FOR PIN AND HANGER REPLACEMENTS AND SHORING FOR CONCRETE OR STEEL MEMBER REPLACEMENTS WHICH ARE SPECIFICALLY INCLUDED ELSEWHERE. THE WORK ALSO INCLUDES TEMPORARY PLATFORMS OR OTHER MEANS TO PREVENT LOOSE MATERIALS FROM FALLING DURING DEMOLITION OR RECONSTRUCTION OF THE STRUCTURE OVER ACTIVE AREAS BELOW.

B. REQUIREMENTS

THE CONTRACTOR SHALL FURNISH ALL LABOR, EQUIPMENT AND MATERIALS TO PROVIDE ALL TEMPORARY SHORING, AS REQUIRED IN THE PLANS. IN ADDITION, THE CONTRACTOR SHALL BE RESPONSIBLE FOR PROVIDING TEMPORARY PROTECTIVE STRUCTURES AS REQUIRED TO PROTECT ACTIVE AREAS BELOW AND EXISTING FACILITIES SCHEDULED TO REMAIN.

THE DETAILS OF THE TEMPORARY SHORING, BRACING AND PROTECTIVE STRUCTURES SHALL BE SEALED BY A REGISTERED PROFESSIONAL ENGINEER AND SUBMITTED TO THE ENGINEER FOR APPROVAL.

AFTER THE TEMPORARY CONSTRUCTION AND PROTECTIVE STRUCTURES HAVE SERVED THEIR PURPOSE AND WHEN SO DIRECTED BY THE ENGINEER, THEY SHALL BE REMOVED. ALL MATERIAL SHALL BECOME THE PROPERTY OF THE CONTRACTOR AND SHALL BE REMOVED FROM THE SITE AND DISPOSED OF BY THE CONTRACTOR.

C. PAYMENT

THIS WORK WILL BE PAID FOR AT THE CONTRACT LUMP SUM PRICE BID WHICH PRICE AND PAYMENT SHALL BE FULL COMPENSATION FOR ALL LABOR, EQUIPMENT, MATERIALS AND INCIDENTALS NECESSARY TO COMPLETE THE WORK IN CONFORMANCE WITH THESE REQUIREMENTS, AND TO THE SATISFACTION OF THE ENGINEER.

17. REPLACEMENT OF EXISTING REINFORCING STEEL

ANY EXISTING REINFORCING BARS WHICH ARE TO BE INCORPORATED INTO THE NEW WORK AND WHICH ARE MADE UNUSABLE BY THE CONTRACTOR'S CONCRETE REMOVAL OPERATIONS SHALL BE REPLACED WITH NEW STEEL AT NO COST TO THE STATE. ANY EXISTING REINFORCING BARS DEEMED BY THE ENGINEER TO BE UNUSABLE BECAUSE OF CORROSION SHALL BE REPLACED WITH NEW STEEL. AN ALLOWANCE OF 40,000 POUNDS IS INCLUDED IN ITEM 509 FOR THIS PURPOSE, LISTED IN THE "GENERAL" COLUMN OF THE ESTIMATED QUANTITIES TABLE.

18. ITEM 503 - UNCLASSIFIED EXCAVATION, AS PER PLAN

A CONTINGENCY QUANTITY OF 300 CU. YDS IS INCLUDED WITH THIS ITEM TO BE USED AS DIRECTED BY THE ENGINEER FOR EXCAVATION ADJACENT TO EXISTING PIERS, ABUTMENTS AND WALLS AS REQUIRED FOR SOUNDING OF EXISTING CONCRETE AND PATCHING. PAYMENT FOR THIS WORK SHALL BE BASED ON THE DEPTH OF EXCAVATION AS DIRECTED BY THE ENGINEER AND THE LIMITS SHOWN ON SHEET 19/270. THIS QUANTITY IS LISTED IN THE "GENERAL" COLUMN OF THE ESTIMATED QUANTITIES TABLE.

19. ITEM 510 - DOWEL HOLES, AS PER PLAN

THIS ITEM SHALL INCLUDE THE DRILLING OF HOLES INTO CONCRETE OR MASONRY AND THE FURNISHING AND PLACING OF GROUT INTO HOLES. NONSHRINKING EPOXY GROUT AND ANCHORING SHALL BE USED IN ACCORDANCE WITH SUPPLEMENTAL SPECIFICATION 852 AND CMS 705.20. PAYMENT SHALL BE INCLUDED WITH ITEM 510.

A CONTINGENCY QUANTITY OF 500 EA. IS INCLUDED WITH ITEM 510, DOWEL HOLES, AS PER PLAN, TO BE USED AS DIRECTED BY THE ENGINEER. THIS QUANTITY IS LISTED IN THE "GENERAL" COLUMN OF THE ESTIMATED QUANTITIES TABLE.

20. ITEM 511 - CLASS C CONCRETE, PIERS AND ABUTMENTS, AS PER PLAN

IN ADDITION TO ALL REQUIREMENTS SET FORTH IN ITEM 511, THIS ITEM SHALL INCLUDE THE COMPLETE REMOVAL OF DESIGNATED PORTIONS OF PIERS AND ABUTMENTS TO THE LIMITS SHOWN ON THE PLANS OR TO THE LIMITS DIRECTED BY THE ENGINEER. REMOVAL SHALL BE IN ACCORDANCE WITH APPLICABLE PROVISIONS OF ITEM 202, PORTIONS OF STRUCTURES REMOVED, AS PER PLAN, BUT INCLUDED WITH ITEM 511 FOR PAYMENT. DURING REPLACEMENT OF PORTIONS OF PIERS AND ABUTMENTS THE CONTRACTOR SHALL PROVIDE ANY REQUIRED TEMPORARY SHORING OF EXISTING MEMBERS.

PAYMENT SHALL BE BASED ON NOMINAL DIMENSIONS OF THE NEW MEMBERS. ANY ADDITIONAL EXISTING PORTIONS OF PIERS AND ABUTMENTS DETERMINED BY THE ENGINEER TO BE EXCESSIVELY DETERIORATED SHALL BE REPLACED. AN ALLOWANCE OF 200 CU. YDS. IS INCLUDED WITH ITEM 511, CLASS C CONCRETE, PIERS AND ABUTMENTS, AS PER PLAN, FOR THIS PURPOSE, LISTED IN THE "GENERAL" COLUMN OF THE ESTIMATED QUANTITIES TABLE.

21. ITEM 511 - CLASS S CONCRETE, COLUMNS, AS PER PLAN

IN ADDITION TO ALL REQUIREMENTS SET FORTH IN ITEM 511, THIS ITEM SHALL INCLUDE THE COMPLETE REMOVAL OF DESIGNATED PORTIONS OF COLUMNS TO THE LIMITS SHOWN ON THE PLANS OR TO THE LIMITS DIRECTED BY THE ENGINEER. REMOVAL SHALL BE IN ACCORDANCE WITH APPLICABLE PROVISIONS OF ITEM 202, PORTIONS OF STRUCTURES REMOVED, AS PER PLAN, BUT INCLUDED WITH ITEM 511 FOR PAYMENT. DURING REPLACEMENT OF COLUMNS THE CONTRACTOR SHALL PROVIDE ANY REQUIRED TEMPORARY SHORING OF EXISTING MEMBERS.

PAYMENT SHALL BE BASED ON NOMINAL DIMENSIONS OF THE NEW MEMBERS. ANY ADDITIONAL EXISTING PORTIONS OF COLUMNS DETERMINED BY THE ENGINEER TO BE EXCESSIVELY DETERIORATED SHALL BE REPLACED. AN ALLOWANCE OF 50 CU. YDS. IS INCLUDED WITH ITEM 511, CLASS S CONCRETE, COLUMNS, AS PER PLAN, FOR THIS PURPOSE, LISTED IN THE "GENERAL" COLUMN OF THE ESTIMATED QUANTITIES TABLE.

22. ITEM 511 - CLASS S CONCRETE, FLOORBEAMS, AS PER PLAN

IN ADDITION TO ALL REQUIREMENTS SET FORTH IN ITEM 511, THIS ITEM SHALL INCLUDE THE COMPLETE REMOVAL OF DESIGNATED PORTIONS OF FLOORBEAMS TO THE LIMITS SHOWN ON THE PLANS OR TO THE LIMITS DIRECTED BY THE ENGINEER. REMOVAL SHALL BE IN ACCORDANCE WITH APPLICABLE PROVISIONS OF ITEM 202, PORTIONS OF STRUCTURES REMOVED, AS PER PLAN, BUT INCLUDED WITH ITEM 511 FOR PAYMENT. DURING REPLACEMENT OF FLOORBEAMS, THE CONTRACTOR SHALL PROVIDE ANY REQUIRED TEMPORARY SHORING OF EXISTING MEMBERS.

PAYMENT SHALL BE BASED ON NOMINAL DIMENSIONS OF THE NEW MEMBERS. ANY ADDITIONAL EXISTING PORTIONS OF FLOORBEAMS DETERMINED BY THE ENGINEER TO BE EXCESSIVELY DETERIORATED SHALL BE REPLACED. AN ALLOWANCE OF 100 CU. YDS. IS INCLUDED WITH ITEM 511, CLASS S CONCRETE FLOORBEAMS, AS PER PLAN, FOR THIS PURPOSE, LISTED IN THE "GENERAL" COLUMN OF THE ESTIMATED QUANTITIES TABLE.

23. ITEM 511 - CLASS S CONCRETE, JACK ARCHES, AS PER PLAN

IN ADDITION TO ALL REQUIREMENTS SET FORTH IN ITEM 511, THIS ITEM SHALL INCLUDE THE COMPLETE REMOVAL OF DESIGNATED PORTIONS OF JACK ARCHES TO THE LIMITS SHOWN ON THE PLANS OR TO THE LIMITS DIRECTED BY THE ENGINEER. REMOVAL SHALL BE IN ACCORDANCE WITH APPLICABLE PROVISIONS OF ITEM 202, PORTIONS OF STRUCTURES REMOVED, AS PER PLAN, BUT INCLUDED WITH ITEM 511 FOR PAYMENT.

PAYMENT SHALL BE BASED ON NOMINAL DIMENSIONS OF THE NEW MEMBERS. ANY ADDITIONAL EXISTING PORTIONS OF JACK ARCHES DETERMINED BY THE ENGINEER TO BE EXCESSIVELY DETERIORATED SHALL BE REPLACED. AN ALLOWANCE OF 40 CU. YDS. IS INCLUDED WITH ITEM 511, CLASS S CONCRETE, JACK ARCHES, AS PER PLAN, FOR THIS PURPOSE, LISTED IN THE "GENERAL" COLUMN OF THE ESTIMATED QUANTITIES TABLE.

24. ITEM 511 - CLASS S CONCRETE, LOWER DECK RAILINGS, AS PER PLAN

IN ADDITION TO ALL REQUIREMENTS SET FORTH IN ITEM 511, THIS ITEM SHALL INCLUDE THE COMPLETE REMOVAL OF DESIGNATED PORTIONS OF LOWER DECK RAILINGS TO THE LIMITS SHOWN ON THE PLANS OR TO THE LIMITS DIRECTED BY THE ENGINEER. REMOVAL SHALL BE IN ACCORDANCE WITH APPLICABLE PROVISIONS OF ITEM 202, PORTIONS OF STRUCTURES REMOVED, AS PER PLAN, BUT INCLUDED WITH ITEM 511 FOR PAYMENT. PAYMENT SHALL BE BASED ON PLAN DIMENSIONS FOR THE NEW MEMBERS. ANY ADDITIONAL EXISTING PORTIONS OF LOWER DECK RAILINGS DETERMINED BY THE ENGINEER TO BE EXCESSIVELY DETERIORATED SHALL BE REPLACED. AN ALLOWANCE OF 50 CU. YDS IS INCLUDED WITH ITEM 511, CLASS S CONCRETE, LOWER DECK RAILINGS, AS PER PLAN, FOR THIS PURPOSE, LISTED IN THE "GENERAL" COLUMN OF THE ESTIMATED QUANTITIES TABLE.

25. ITEM SPECIAL - REPLACEMENT OF LOWER DECK FLOORBEAM CORBELS

A. DESCRIPTION

THIS WORK SHALL CONSIST OF THE REMOVAL AND REPLACEMENT OF DETERIORATED LOWER DECK FLOORBEAM CORBELS.

B. REQUIREMENTS

THE CONTRACTOR SHALL FURNISH ALL LABOR, MATERIALS AND EQUIPMENT REQUIRED TO REPLACE EXISTING LOWER DECK FLOORBEAM CORBELS TO THE LIMITS SHOWN ON THE PLANS OR AS DIRECTED BY THE ENGINEER. THE CONTRACTOR SHALL PROVIDE TEMPORARY SHORING OF EXISTING MEMBERS AS REQUIRED TO COMPLETE THIS WORK. REMOVAL SHALL BE IN ACCORDANCE WITH APPLICABLE PROVISIONS OF ITEM 202, PORTIONS OF STRUCTURES REMOVED, AS PER PLAN, BUT INCLUDED WITH ITEM SPECIAL FOR PAYMENT. REPLACEMENT CONCRETE SHALL MEET THE REQUIREMENTS OF ITEM 511, CLASS S CONCRETE. AT LOCATIONS WHERE THE CORBEL IS TO BE REPLACED BENEATH AN EXISTING COLUMN WHICH IS TO REMAIN, THE INTERFACE OF THE NEW CORBEL AND THE EXISTING COLUMN SHALL BE FILLED WITH A NON-SHRINK GROUT. THE GROUT SHALL HAVE A MINIMUM COMPRESSIVE STRENGTH OF 5,000 PSI AT 28 DAYS AND MEET THE REQUIREMENTS OF ASTM 1107, GRADE C.

COUNTY BRIDGE NO. 84

HOWARD NEEDLES TAMMEN & BERGENDOFF
ARCHITECTS ENGINEERS PLANNERS
HNTB

GENERAL NOTES
BR. NO. CUY - 6 - 1499
REHABILITATION OF
VETERANS MEMORIAL BRIDGE
(U.S. 6, 20, 42 & S.R. 3 OVER CUYAHOGA RIVER)
CLEVELAND CUYAHOGA COUNTY OHIO

DRAWN B.E.B.	TRACED B.F.	CHECKED A.D.Y.	REVIEWED C.A.B.	REVISED
DATE 3/22/94	DATE 3/28/94	DATE 3/30/94	DATE 3/31/94	SHEET 4 /270

GENERAL NOTES - STRUCTURES OVER 20-FT SPAN

FHWA REGION	STATE	PROJECT	
5	OHIO		

136/412

CUYAHOGA COUNTY
CUY - 6 - 14.99

C. METHOD OF MEASUREMENT

THE QUANTITY WILL BE MEASURED AS THE ACTUAL NUMBER OF LOWER DECK FLOORBEAM CORBELS REPLACED AS SPECIFIED. THE QUANTITY SO MEASURED SHALL INCLUDE ALL LABOR, MATERIALS, EQUIPMENT, AND INCIDENTALS NECESSARY TO SATISFACTORILY PERFORM THE WORK OF THIS ITEM.

D. BASIS OF PAYMENT

THE PAYMENT WILL BE MADE AT THE CONTRACT UNIT PRICE BID FOR:

ITEM	UNIT	DESCRIPTION
SPECIAL	EACH	REPLACEMENT OF LOWER DECK FLOORBEAM CORBELS

AN ALLOWANCE OF 15 EA. IS INCLUDED WITH ITEM SPECIAL, REPLACEMENT OF LOWER DECK FLOORBEAM CORBELS TO COVER REPLACEMENT OF ADDITIONAL CORBELS AS DIRECTED BY THE ENGINEER. THIS QUANTITY IS LISTED IN THE "GENERAL" COLUMN OF THE ESTIMATED QUANTITIES TABLE.

26. CLASS S CONCRETE, USING SHRINKAGE COMPENSATING CEMENT

A. DESCRIPTION

THIS WORK SHALL CONSIST OF REMOVAL OF DETERIORATED PORTIONS OF THE ROOF SLABS OF THE WEST STATION AND WEST APPROACH TUNNELS AND FURNISHING AND PLACING PORTLAND CEMENT CONCRETE USING SHRINKAGE COMPENSATING CEMENT FOR THE NEW ROOF SLAB SECTIONS AND UPPER AND LOWER BRIDGE DECKS (EXCEPT SPAN 4). THE WORK SHALL BE IN ACCORDANCE WITH THESE SPECIFICATIONS, AND IN REASONABLY CLOSE CONFORMITY WITH THE LINES, GRADES, AND DIMENSIONS SHOWN ON THE PLANS. ALL APPLICABLE PROVISIONS OF ITEM 511 SHALL APPLY EXCEPT AS MODIFIED HEREIN.

B. REMOVAL

ITEM 511, CLASS S CONCRETE, TUNNEL ROOF SLAB, USING SHRINKAGE COMPENSATING CEMENT SHALL INCLUDE THE REMOVAL OF THE DETERIORATED PORTIONS OF ROOF SLAB TO THE LIMITS SHOWN ON THE PLANS OR TO THE LIMITS DIRECTED BY THE ENGINEER. REMOVAL SHALL BE IN ACCORDANCE WITH APPLICABLE PROVISIONS OF ITEM 202, PORTIONS OF STRUCTURES REMOVED, AS PER PLAN, BUT INCLUDED WITH ITEM 511 FOR PAYMENT.

C. MATERIALS

THE CEMENT SHALL BE EXPANSIVE HYDRAULIC CEMENT CONFORMING TO 701.08.

ADMIXTURES USED IN THE CONCRETE MIXTURE MUST BE COMPATIBLE AND SHALL BE DISPENSED IN ACCORDANCE WITH THE MANUFACTURER'S RECOMMENDATIONS. COMPATIBILITY STATEMENT MUST BE IN WRITING FROM ADMIXTURE SUPPLIER PRIOR TO THE CONCRETE PLACEMENT. ADMIXTURES SHALL BE OBTAINED FROM ONLY ONE SOURCE FOR EACH SPECIFIC PLACEMENT LOCATION.

COARSE AGGREGATE STOCKPILES SHALL BE SATURATED. SATURATION SHALL BE COMPLETED A MINIMUM OF 24 HOURS PRIOR TO USE; HOWEVER, THE APPLICATION OF WATER BY SPRINKLING SHALL CONTINUE AS DIRECTED BY THE ENGINEER.

D. PROPORTIONS

THE MAXIMUM WATER/CEMENT RATIO GIVEN FOR CLASS S CONCRETE IN 499.03 SHALL BE REVISED FROM 0.44 TO 0.45. THE ENGINEER SHALL MAKE APPROPRIATE ADJUSTMENTS IN THE AGGREGATE BATCH WEIGHTS TO MAINTAIN THE YIELD IN ACCORDANCE WITH 499.03.

499.031 PROPORTIONING OPTIONS, SHALL NOT APPLY TO THIS ITEM.

E. SLUMP

SLUMP AT THE TIME AND POINT OF CONCRETE PLACEMENT SHALL BE 3 TO 6 INCHES (75 TO 150 MM).

F. ENTRAINED AIR

CONCRETE SHALL CONTAIN 5 TO 8 PERCENT OF ENTRAINED AIR AT THE TIME AND PLACE OF CONCRETE PLACEMENT.

G. MIXING CONCRETE

THE LAST SENTENCE OF THE THIRD PARAGRAPH OF 499.06 MIXING CONCRETE, SHALL BE REVISED TO READ:

IF AN APPROVED SET-RETARDING (705.12, TYPE B) OR A WATER-REDUCING AND SET-RETARDING (705.12, TYPE D) ADMIXTURE IS USED, DISCHARGE SHALL BE COMPLETED WITHIN 75 MINUTES AFTER THE COMBINING OF THE WATER AND THE CEMENT.

H. CONCRETE DELIVERY

WHEN SUPPLYING CONCRETE USING TYPE K SHRINKAGE-COMPENSATING CEMENT, READY-MIX PLANTS IDENTIFIED AS "TRUCK MIX" SHALL PROPORTION THE CONCRETE SUCH THAT THE VOLUME PLACED INTO THE TRUCK IS NO MORE THAN 3/4 OF ITS RATED CAPACITY OR 6 CUBIC YARDS (4.6 CUBIC METERS), WHICHEVER IS THE SMALLER, UNLESS A LARGER SIZE IS APPROVED BY THE ENGINEER. THE COST FOR COMPLYING WITH THE REQUIREMENT SHALL BE INCLUDED IN THE APPROPRIATE CONCRETE BID ITEM.

I. PLACING CONCRETE

MAXIMUM AMBIENT TEMPERATURE AT THE TIME OF PLACEMENT OF CONCRETE SHALL BE 80 F (27 C).

THE DECK FORMWORK, BEAM FLANGES AND REINFORCING SHALL BE THOROUGHLY SPRINKLED WITH WATER PRIOR TO PLACEMENT OF THE CONCRETE. SPRINKLED AREAS SHALL REMAIN DAMP UNTIL PLACEMENT OF CONCRETE, HOWEVER, NO EXCESS STANDING WATER WILL BE ALLOWED.

AT THE CONTRACTOR'S OPTION AN EVAPORATION RETARDANT AND FINISHING AIR MAY BE USED AFTER FINISHING AND PRIOR TO THE TEXTURING OPERATION. ANY PRODUCT USED FOR SUCH PURPOSE SHALL BE SPECIFICALLY MARKETED FOR SUCH USE (PLAIN WATER IS NOT ACCEPTABLE). THE PRODUCT MAY ALSO BE SPRAYED OVER TEXTURED AREAS. THE EVAPORATION RETARDANT AND FINISHING AND SHALL BE APPLIED AS PER THE MANUFACTURER'S RECOMMENDATIONS. THE WET BURLAP CURE SHALL FOLLOW THIS OPERATION AS CLOSELY AS POSSIBLE.

DECKS AND SLABS SHALL BE GIVEN A FOG SPRAY OF WATER WHEN THE RATE OF EVAPORATION EXCEEDS 0.2 LB./SQ. FT./HOUR (1 KG/SGM/HOUR) (SEE FIGURE 1). THE CONTRACTOR SHALL DETERMINE AND DOCUMENT THE ATMOSPHERIC CONDITIONS, SUBJECT TO VERIFICATION BY THE ENGINEER. FOGGING SHALL CONTINUE UNTIL THE WET BURLAP IS PLACED. FOG MISTING IS TO KEEP THE ENVIRONMENT SURROUNDING THE CONCRETE HUMID TO PREVENT EXCESSIVE EVAPORATION FROM THE SURFACE OF UNHARDENED CONCRETE. FOG MISTING SHALL NOT BE USED TO APPLY WATER TO THE SURFACE OF THE CONCRETE TO FACILITATE LUBRICATION FOR FINISHING PURPOSES. FOGGING EQUIPMENT SHALL HAVE WATER PRESSURE SYSTEMS RATED AT 2400 PSI (16.6 MPA) OR GREATER AND DISCHARGE APPROXIMATELY 2 TO 3 GALLONS (7.6 TO 11.4L) PER MINUTE. WIDE ANGLE AND SHARP ANGLE NOZZLES SHALL BE USED FOR LOW WIND AND WINDY CONDITIONS, RESPECTIVELY.

J. CURING

AS SOON AS ALL FINISHING OPERATIONS HAVE BEEN COMPLETED THE FINISHED SURFACE SHALL BE COVERED WITH A SINGLE LAYER OF CLEAN WET BURLAP. THE FRESH CONCRETE SURFACE SHALL RECEIVE A WET BURLAP CURE FOR 7 DAYS. FOR THE ENTIRE CURING PERIOD, THE BURLAP SHALL BE KEPT WET BY THE CONTINUOUS APPLICATION OF WATER THROUGH SOAKER HOSES. EITHER A 4-MIL (10 MICROMETER) WHITE OPAQUE POLYETHYLENE FILM OR A WET BURLAP-WHITE OPAQUE POLYETHYLENE SHEET SHALL BE USED TO COVER THE WET BURLAP FOR THE ENTIRE CURING PERIOD. STORAGE TANKS FOR CURING WATER SHALL BE ON-SITE AND FILLED BEFORE A POUR WILL BE PERMITTED TO START. STORAGE TANKS SHALL REMAIN ON-SITE THROUGHOUT THE ENTIRE CURE PERIOD. THEY SHALL BE REPLENISHED, AS REQUIRED, WITH A SHUTTLE TANKER TRUCK OR A LOCAL WATER SOURCE SUCH AS A FIRE HYDRANT.

K. SURFACE FINISH

ALL EXPOSED VERTICAL FACES OF DECK EDGES SHALL HAVE A RUBBED FINISH IN ACCORDANCE WITH 511.15. DEFECTS SHALL BE CORRECTED PRIOR TO RUBBING WITH A TYPE K CEMENT MORTAR OF THE SAME PROPORTIONS AS THE CONCRETE.

L. PRE-POUR TESTING

THE LABORATORY SHALL BE NOTIFIED SEVEN (7) DAYS PRIOR TO THE POUR AND, IF DIRECTED BY THE LABORATORY, THE SUPPLIER SHALL BATCH A MINIMUM OF 3 CUBIC YARDS (2.3 CUBIC METERS) OF CONCRETE USING TYPE K SHRINKAGE-COMPENSATING CEMENT MEETING SPECIFICATION REQUIREMENTS, TO BE USED FOR PRE-POUR LABORATORY TESTING.

THE CONCRETE SHALL BE DELIVERED TO THE JOB SITE OR BATCHED AT THE CONCRETE PLANT TO SIMULATE JOB CONDITIONS, AS DIRECTED BY THE LABORATORY. UPON COMPLETION OF THE LABORATORY TESTING, THE CONCRETE SHALL BE WASTED AND DISPOSED OF BY THE SUPPLIER OFF THE RIGHT-OF-WAY UNLESS OTHERWISE APPROVED BY THE ENGINEER. THE COST FOR COMPLYING WITH THIS REQUIREMENT SHALL BE IN ACCORDANCE WITH "BASIS OF PAYMENT".

M. COLD WEATHER CONCRETING

THE REQUIREMENTS AS SPECIFIED IN GENERAL NOTE 37 FOR ITEM SPECIAL - CLASS S LIGHTWEIGHT CONCRETE, SUPERSTRUCTURE, USING SHRINKAGE COMPENSATING CEMENT SHALL APPLY.

N. METHOD OF MEASUREMENT

THE QUANTITY SHALL BE MEASURED AS PER 511 AND SHALL INCLUDE ALL LABOR, MATERIALS, EQUIPMENT AND INCIDENTALS NECESSARY TO COMPLETE THIS ITEM OF WORK.

O. BASIS OF PAYMENT

THE PAYMENT WILL BE MADE AT THE CONTRACT UNIT PRICE BID FOR THE FOLLOWING:

ITEM	UNIT	DESCRIPTION
511	CU. YD.	CLASS S CONCRETE, SUPERSTRUCTURE, USING SHRINKAGE COMPENSATING CEMENT, AS PER PLAN
511	CU. YD.	CLASS S CONCRETE, TUNNEL ROOF SLAB, USING SHRINKAGE COMPENSATING CEMENT, AS PER PLAN
511	LUMP	CLASS S CONCRETE, USING SHRINKAGE COMPENSATING CEMENT, FOR PRE-PLACEMENT TESTING

COUNTY BRIDGE NO. 84

HOWARD NEEDLES TAMMEN & BERGENDOFF
ARCHITECTS ENGINEERS PLANNERS
HNTB

GENERAL NOTES
BR. NO. CUY - 6 - 1499
REHABILITATION OF
VETERANS MEMORIAL BRIDGE
(U.S. 6, 20, 42 & S.R. 3 OVER CUYAHOGA RIVER)
CLEVELAND CUYAHOGA COUNTY OHIO

DRAWN B.E.B.	TRACED B.F.	CHECKED A.D.Y.	REVIEWED C.A.B.	REVISED
DATE 3/22/94	DATE 3/28/94	DATE 3/30/94	DATE 3/31/94	SHEET 5 /270

GENERAL NOTES - STRUCTURES OVER 20-FT SPAN

FHWA REGION	STATE	PROJECT	
5	OHIO		

137/412

CUYAHOGA COUNTY
CUY - 6 - 14.99

ANY ADDITIONAL PORTIONS OF ROOF SLABS DETERMINED BY THE ENGINEER TO BE EXCESSIVELY DETERIORATED SHALL BE REPLACED. AN ALLOWANCE OF 75 CU. YDS. IS INCLUDED WITH ITEM 511, CLASS S CONCRETE, TUNNEL ROOF SLAB, USING SHRINKAGE COMPENSATING CEMENT FOR THIS PURPOSE LISTED IN THE "GENERAL" COLUMN OF THE ESTIMATED QUANTITIES TABLE.

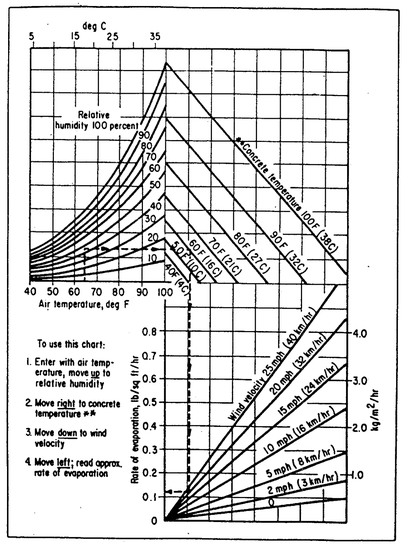

FIGURE 1* - EFFECT OF CONCRETE AND AIR TEMPERATURES, RELATIVE HUMIDITY, AND WIND VELOCITY ON THE RATE OF EVAPORATION OF SURFACE MOISTURE FROM CONCRETE. THIS CHART PROVIDES A GRAPHIC METHOD OF ESTIMATING THE LOSS OF SURFACE MOISTURE FROM CONCRETE. THIS CHART PROVIDES A GRAPHIC METHOD OF ESTIMATING THE LOSS OF SURFACE MOISTURE FOR VARIOUS WEATHER CONDITIONS. TO USE THE CHART, FOLLOW THE FOUR STEPS OUTLINED ABOVE.

* ACI COMMITTEE 308, "STANDARD PRACTICE FOR CURING CONCRETE (ACI 308-81)", AMERICAN CONCRETE INSTITUTE, DETROIT, 1984, 11 PP.

** IN USING THIS FIGURE, THE CONCRETE TEMPERATURE SHALL BE TAKEN AS THE AVERAGE OF THE DECK SURFACE TEMPERATURE AND THE PLASTIC CONCRETE TEMPERATURE.

27. SUPERPLASTICIZED CONCRETE

A. DESCRIPTION

THIS WORK SHALL CONSIST OF REMOVAL OF DETERIORATED PORTIONS OF THE ROOF SLABS OF THE WEST STATION AND WEST APPROACH TUNNELS AND FURNISHING AND PLACING SUPERPLASTICIZED CONCRETE FOR THE NEW ROOF SLAB SECTIONS AND UPPER AND LOWER BRIDGE DECK (EXCEPT SPAN 4).

IT SHALL BE THE CONTRACTOR'S RESPONSIBILITY TO SUPPLY A CONCRETE WHICH MEETS THESE SPECIFICATIONS AND PROVIDES THE NECESSARY WORKABILITY, FINISHABILITY AND IF NEEDED, PUMPABILITY. THE NEED FOR CHEMICAL ADMIXTURE AND/OR AGGREGATES DIFFERENT FROM THE CONTRACTOR'S NORMAL SOURCES IS A DISTINCT POSSIBILITY, ALL COSTS OF WHICH SHALL BE INCLUDED UNDER THIS ITEM OF WORK. ALL APPLICABLE PROVISIONS OF ITEM 511 CLASS S CONCRETE OF THE CONSTRUCTION AND MATERIAL SPECIFICATIONS SHALL APPLY, EXCEPT AS MODIFIED HEREIN.

B. REMOVAL

ITEM SPECIAL, SUPERPLASTICIZED CONCRETE, TUNNEL ROOF SLAB SHALL INCLUDE THE REMOVAL OF THE DETERIORATED PORTIONS OF ROOF SLAB TO THE LIMITS SHOWN ON THE PLANS OR TO THE LIMITS DIRECTED BY THE ENGINEER. REMOVAL SHALL BE IN ACCORDANCE WITH APPLICABLE PROVISIONS OF ITEM 202, PORTIONS OF STRUCTURES REMOVED, AS PER PLAN, BUT INCLUDED WITH ITEM SPECIAL FOR PAYMENT.

C. MATERIALS

THE MAXIMUM SODIUM SULFATE SOUNDNESS LOSS OF COARSE AGGREGATE SHALL BE 10 PERCENT.

D. PROPORTIONS

THE CONTRACTOR MAY MODIFY THE MIXES SHOWN BY ADJUSTING THE COARSE AND FINE AGGREGATES UP TO 200 LB OR BY ADDING AN INTERMEDIATE COARSE AGGREGATE INTO THE MIX, PROVIDED THAT THE CALCULATED BLENDED COARSE AGGREGATE FALLS WITHIN THE GRADATION LIMITS SPECIFIED BY TABLE 703-1 OF THE CONSTRUCTION AND MATERIAL SPECIFICATIONS.

THE PROPORTIONS OF COARSE AND FINE AGGREGATE SHALL BE ADJUSTED TO PROVIDE THE MAXIMUM AMOUNT OF COARSE AGGREGATE POSSIBLE AND STILL PROVIDE A WORKABLE AND FINISHABLE MIX.

THE CONTRACTOR SHALL SUBMIT ANY MIX MODIFICATION TO THE ENGINEER AND RECEIVE APPROVAL IN WRITING BEFORE ANY CONCRETE IS PLACED.

THE FOLLOWING CONCRETE TABLE PROPORTIONS SHALL BE USED AS A STARTING MIX DESIGN, SUBJECT TO PERMITTED MODIFICATIONS AS DISCUSSED ABOVE. THE WEIGHTS SPECIFIED IN THE CONCRETE TABLE WERE CALCULATED FOR AGGREGATE OF THE FOLLOWING BULK SPECIFIC GRAVITIES (SSD): NATURAL SAND AND GRAVEL 2.62, LIMESTONE SAND 2.68, LIMESTONE 2.65, SLAG 2.30, AND FLY ASH 2.30. FOR AGGREGATES OF SPECIFIC GRAVITIES DIFFERING MORE THAN ±.02 FROM THESE, THE WEIGHTS IN THE TABLE SHALL BE CORRECTED.

IF, DURING THE PROGRESS OF WORK, THE SPECIFIC GRAVITY OF ONE OR BOTH OF THE AGGREGATES CHANGES, BATCH WEIGHTS SHALL BE ADJUSTED TO CONFORM TO THE NEW SPECIFIC GRAVITIES.

CONCRETE TABLE
QUANTITIES PER CUBIC YARD

COARSE AGGREGATE GRADUATION	FINE AGGREGATE (LB)	COARSE AGGREGATE (LB)	TOTAL (LB)	CEMENT CONTENT (LB)	MAX. WATER CEMENT RATIO	MAX. AIR CONTENT (± 2%)
#8 LIMESTONE	1185	1630	2815	715	0.38	7
#57 GRAVEL	1230	1600	2830	715	0.36	7
#57 LIMESTONE	1230	1620	2850	715	0.36	7
#57 SLAG	1230	1405	2635	715	0.36	7

SLUMP 8" MAXIMUM
4" MAXIMUM FROM ADDITION OF WATER ONLY

E. PROVISIONS

AN APPROVED HIGH RANGE WATER REDUCER (SUPERPLASTICIZER OR HIGH RANGE WATER REDUCER SET RETARDER) SHALL BE USED. THE DOSAGE RATE SHALL BE IN ACCORDANCE WITH MANUFACTURER'S RECOMMENDATIONS TO ACHIEVE THE DESIRED WORKABILITY LEVEL.

THE CHEMICAL ADMIXTURES SHALL CONFORM TO 705.12 AND ASTM C494 SHALL BE ADDED TO THE CONCRETE AT THE PLANT. THE ADDITION OF THESE ADMIXTURES SHALL SUPERSEDE CONCRETE TEMPERATURE REQUIREMENTS UNDER ITEMS 499.03 AND 511.06.

ALL ADMIXTURES, INCLUDING AIR ENTRAINMENT, SHALL BE CERTIFIED AS COMPATIBLE BY THE MANUFACTURING COMPANIES. THE MANUFACTURER OF TYPE F OR G ADMIXTURES SHALL FURTHER DESIGNATE A TECHNICAL REPRESENTATIVE FROM THE READY-MIX SUPPLIER OR HIS COMPANY TO BE IN CHARGE OF DISPENSING ADMIXTURE PRODUCTS. OPERATIONS AND PROCEDURES WHICH ARE CONSIDERED BY THE DESIGNATED REPRESENTATIVE TO BE DETRIMENTAL TO THE INTEGRITY OF THE CONCRETE SHALL NOT BE PERMITTED.

THE CEMENT CONTENT SHALL BE MAINTAINED AND THE MAXIMUM WATER-CEMENT RATIO SHALL NOT BE EXCEEDED. THE TYPE F OR G ADMIXTURE SHALL BE ADDED AND MIXED IN ACCORDANCE WITH MANUFACTURER'S RECOMMENDATIONS. THE CONTRACTOR SHALL FURNISH A VOLUMETRIC DISPENSER FOR TYPE F OR G ADMIXTURE OR HAVE A GAUGE ON EACH CONCRETE TRUCK'S TYPE F OR G DISPENSING TANK. ALL WASH WATER SHALL BE REMOVED BY REVERSING EACH TRUCK DRUM AT THE PLANT, IN THE PRESENCE OF AN INSPECTOR.

THE TYPE F OR G ADMIXTURE SHALL NOT BE ALLOWED TO COME INTO CONTACT WITH UNHYDRATED CEMENT. SUFFICIENT TYPE A OR D ADMIXTURE SHALL BE ADDED TO THE MIX TO PROVIDE FOR THOROUGH WETTING OF THE CEMENT PRIOR TO ADDING TYPE F OR G ADMIXTURE. THIS MIX SHALL BE MIXED FOR APPROXIMATELY ONE-HALF THE TOTAL MIXING TIME PRIOR TO ADDING THE TYPE F OR G ADMIXTURE.

IF TYPE F OR G ADMIXTURE IS ADDED AT THE JOB SITE, THE LOAD SHALL BE MIXED A MINIMUM OF FIVE MINUTES AT MIXING SPEED.

IF SLUMP LOSS OCCURS BEFORE PLACEMENT OF CONCRETE, CONCRETE MAY BE "REPLASTICIZED" WITH THE ADMIXTURE TO RESTORE PLASTICITY. SLUMP AND AIR CONTENT SHALL BE RECHECKED TO ENSURE CONFORMANCE TO THE SPECIFICATIONS. IF THE CONSISTENCY OF THE CHARGE AFTER "REPLASTICIZING" IS SUCH AS TO CAUSE SEGREGATION OF COMPONENTS, THIS SHALL BE CAUSE FOR REJECTION OF THE LOAD.

DISCHARGE SHALL BE COMPLETE WITHIN 90 MINUTES AFTER COMBINING WATER AND CEMENT.

THE CONTRACTOR SHALL MAKE ALL TESTS NECESSARY TO ENSURE CONFORMANCE WITH THESE SPECIFICATIONS PRIOR TO PLACEMENT OF CONCRETE.

ALL INITIAL TESTS AT THE PLANT AND IN THE FIELD SHALL BE THE CONTRACTOR'S RESPONSIBILITY. THESE TESTS SHALL BE PERFORMED BY A CERTIFIED CONCRETE TECHNICIAN APPROVED BY THE DEPARTMENT. TEST INFORMATION SHALL BE MADE AVAILABLE TO THE ENGINEER DURING CONCRETE PRODUCTION, DOCUMENTED AND SUBMITTED IN WRITING TO THE ENGINEER AFTER CONCRETE PLACEMENT. THIS PROCEDURE SHALL BE CONDUCTED ON THE FIRST FEW LOADS OF CONCRETE, AND THE FIRST FEW LOADS OF CONCRETE AT ANY TIME A MIX ADJUSTMENT IS MADE OR DELIVERY METHOD IS CHANGED. THE ENGINEER WILL BE RESPONSIBLE FOR SUBSEQUENT TESTS AS CONCRETE IS PLACED.

SAMPLING AND TESTING FOR ENTRAINED AIR CONTENT AND SLUMP SHALL BE MEASURED AT THE POINT OF PLACEMENT. FOR DECK CONCRETE, THIS SHALL BE AT THE POINT OF PLACEMENT ON THE DECK.

THE CONTRACTOR SHALL MAKE ONE OR MORE TRIAL BATCHES OF TYPE F OR G ADMIXTURE CONCRETE OF THE BATCH SIZE TO BE HAULED AT LEAST FOUR DAYS BEFORE DECK CONCRETE IS TO BE PLACED. HE SHALL CAST ONE OR MORE TEST SLABS, E.G., 8 FEET BY 4 FEET BY 4 INCH, TEXTURED IN ACCORDANCE WITH THESE PLAN NOTES, EXCEPT THAT THE CONTRACTOR SHALL NOT BE REQUIRED

COUNTY BRIDGE NO. 84

HOWARD NEEDLES TAMMEN & BERGENDOFF
ARCHITECTS ENGINEERS PLANNERS
HNTB

GENERAL NOTES
BR. NO. CUY - 6 - 1499
REHABILITATION OF
VETERANS MEMORIAL BRIDGE
(U.S. 6, 20, 42 & S.R. 3 OVER CUYAHOGA RIVER)
CLEVELAND CUYAHOGA COUNTY OHIO

DRAWN B.E.B.	TRACED B.F.	CHECKED A.D.Y.	REVIEWED C.A.B.	REVISED
DATE 3/22/94	DATE 3/28/94	DATE 3/30/94	DATE 3/31/94	SHEET 6 /270

GENERAL NOTES - STRUCTURES OVER 20-FT SPAN

FHWA REGION	STATE	PROJECT	
5	OHIO		

138/412

CUYAHOGA COUNTY
CUY - 6 - 14.99

TO SAW THE TEXTURE UNLESS THE DECK TEXTURE IS BY SAWING. WHERE MORE THAN ONE PLACEMENT IS BEING MADE, THE ENGINEER MAY REQUIRE ANOTHER TRIAL BATCH. PAYMENT FOR TRIAL BATCHES SHALL BE AT THE LUMP SUM PRICE BID FOR ITEM SPECIAL, SUPERPLASTICIZED CONCRETE, TRIAL MIX.

THE CONTRACTOR SHALL PREPARE OTHER SAMPLES AND SPECIMENS AS DIRECTED BY THE ENGINEER. THE CONTRACTOR SHALL FURNISH THE REQUIRED MATERIALS AND SAMPLES WITHOUT CHARGE TO THE DEPARTMENT AS PER 106.03. THE ENGINEER SHALL BE NOTIFIED SEVEN (7) DAYS IN ADVANCE OF TEST BATCH PREPARATION AND WILL MAKE ALL REQUIRED TESTS.

F. PLACEMENT LIMITATION

CONCRETE DECK PLACEMENTS SHALL BEGIN ONLY WHEN FAVORABLE ATMOSPHERIC CONDITIONS EXIST AND ARE PREDICTED TO STAY FAVORABLE FOR THE DURATION OF THE PLACEMENT.

FAVORABLE ATMOSPHERIC CONDITIONS EXIST WHEN THE SURFACE EVAPORATION RATE AFFECTED BY THE AMBIENT AIR TEMPERATURE, CONCRETE TEMPERATURE, RELATIVE HUMIDITY, AND WIND VELOCITY IS 0.1 POUNDS PER SQUARE FOOT PER HOUR OR LESS. FIGURE 1 SHALL BE USED TO DETERMINE GRAPHICALLY THE SURFACE EVAPORATION RATE. THE SURFACE EVAPORATION RATE SHALL BE MEASURED WITHIN 10 FEET OF THE AREA WHERE CONCRETE IS TO BE PLACED, AT THE PROPOSED FINISHED CONCRETE SURFACE. UNFAVORABLE ATMOSPHERIC CONDITIONS MAY REQUIRE PLACEMENT AT NIGHT AND SMALL BATCHES.

FOR POURED RAILINGS, FIGURE 1 SHALL NOT APPLY.

G. SUPERSTRUCTURE DECK CURING AND TEXTURING

CURING SHALL BE IN ACCORDANCE WITH 511.14 METHOD (A) WATER CURING USING CONTINUOUS SPRINKLING, AND NO METHOD WHICH RETARDS EVAPORATION FROM THE BURLAP WILL BE ALLOWED. THE PROVISIONS OF SUPPLEMENTAL SPECIFICATION 836 SHALL NOT BE USED UNDER THIS ITEM OF WORK. WHEN PLACING CONCRETE UNDER 511.12, METHODS WHICH RETARD EVAPORATION MAY BE USED, BUT THE DECK SHALL BE KEPT CONTINUOUSLY WET WITH SOAKER HOSES AND THE CURING SHALL BE SEVEN (7) DAYS WITH THE SURFACE BEING MAINTAINED BETWEEN 50°F AND 100°F AS SPECIFIED.

AT THE CONTRACTOR'S OPTION THE CONTRACTOR MAY SAW TEXTURE THE DECK INSTEAD OF TEXTURING AS PER 511. IF TEXTURE IS TO BE SAWED, SEE THE PROPOSAL NOTE ON SURFACE GROOVING. IF THE TEXTURE AS REQUIRED BY 511 IS NOT MET, THE CONTRACTOR SHALL SAW TEXTURE THE DECK AT HIS EXPENSE.

THE TEXTURING AND TINNING OPERATION SHALL FOLLOW AS CLOSELY AS POSSIBLE BEHIND THE PLACEMENT OPERATION. IF THE TEXTURING OPERATION CAUSES THE SURFACE TO BE TORN, THEN AN EVAPORATION RETARDANT AND FINISHING AIR (WATER IS NOT ACCEPTABLE) SHALL BE USED BY THE CONTRACTOR BEHIND THE FINISHING MACHINE. THE CONTRACTOR SHALL HAVE AN EVAPORATION RETARDANT AND FINISHING AID ON HAND DURING PLACEMENTS. ONLY PRODUCTS SPECIFICALLY MARKETED FOR SUCH USAGE SHALL BE UTILIZED. APPLICATION RATE SHALL BE IN ACCORDANCE WITH MANUFACTURER'S WRITTEN RECOMMENDATIONS. IMMEDIATELY AFTER THE TEXTURING OPERATION, THE CONTRACTOR SHALL SPRAY AN EVAPORATION RETARDANT (WATER IS NOT ACCEPTABLE) OVER THE TEXTURED AREA. THE APPLICATION RATE SHALL BE AS PER THE MANUFACTURER'S WRITTEN RECOMMENDATIONS. PLACEMENT OF WET BURLAP SHALL FOLLOW THIS OPERATION AS CLOSELY AS POSSIBLE WITHOUT DAMAGE TO THE TEXTURE.

H. METHOD OF MEASUREMENT

THE QUANTITY SHALL BE MEASURED AS PER 511.18 OF THE CONSTRUCTION AND MATERIAL SPECIFICATIONS AND SHALL INCLUDE ALL LABOR, MATERIAL, EQUIPMENT, AND INCIDENTALS NECESSARY TO COMPLETE THIS ITEM OF WORK.

I. BASIS OF PAYMENT

PAYMENT FOR THE ABOVE COMPLETED AND ACCEPTED QUANTITIES WILL BE MADE AT THE CONTRACT BID PRICE FOR:

PRICE BID

ITEM	UNIT	DESCRIPTION
SPECIAL	CU. YD.	SUPERPLASTICIZED CONCRETE, TUNNEL ROOF SLAB
SPECIAL	CU. YD.	SUPERPLASTICIZED CONCRETE, SUPERSTRUCTURE
SPECIAL	LUMP	SUPERPLASTICIZED CONCRETE, TRIAL MIX

ANY ADDITIONAL PORTIONS OF ROOF SLABS DETERMINED BY THE ENGINEER TO BE EXCESSIVELY DETERIORATED SHALL BE REPLACED. AN ALLOWANCE OF 75 CU. YDS. IS INCLUDED WITH ITEM 511, SUPERPLASTICIZED CONCRETE, TUNNEL ROOF SLAB, FOR THIS PURPOSE LISTED IN THE "GENERAL" COLUMN OF THE ESTIMATED QUANTITIES TABLE.

28. SHOP DRAWINGS

UPON COMPLETION OF THE PROJECT, THE CONTRACTOR SHALL, IN ADDITION TO THE REQUIREMENTS SPECIFIED ELSEWHERE, FURNISH A COMPLETE SET OF FULL SIZE SHOP DRAWINGS TO THE OFFICE OF THE CUYAHOGA COUNTY ENGINEER. PAYMENT FOR THIS WORK SHALL BE INCIDENTAL TO THE ITEMS FOR WHICH THE SHOP DRAWINGS ARE USED.

29. ITEM 513 - STRUCTURAL STEEL (AISC CATEGORY I), AS PER PLAN

ALL STRUCTURAL STEEL SHALL BE ASTM A36, UNLESS OTHERWISE SPECIFIED IN THE PLANS. UPPER DECK STRINGERS AND FLOORBEAM ELEMENTS DESIGNATED CVN SHALL MEET NOTCH TOUGHNESS REQUIREMENTS AS SPECIFIED IN 711.01.

ALL PROVISIONS OF ITEM 513 SHALL APPLY EXCEPT AS MODIFIED HEREIN.

513.02 GENERAL. DELETE FIFTH LAST PARAGRAPH IN THE ARTICLE WHICH SAYS:

THE FABRICATOR SHALL NOTIFY THE DIRECTOR AT LEAST TWO WEEKS IN ADVANCE OF THE BEGINNING OF SHOP FABRICATION, AND FURNISH A TENTATIVE FABRICATION SCHEDULE FOR THE WORK. NOTIFICATION OF SCHEDULE CHANGES SHALL BE MADE AS SOON AS PRACTICABLE.

REPLACE WITH THE FOLLOWING:

FABRICATION OF STRUCTURAL STEEL SHALL BE SEQUENCED TO PRODUCE THOSE MEMBERS REQUIRED FOR WORK ON THE CRITICAL PATH AS DETERMINED BY THE FINALIZED DETAILED CPM SCHEDULE. TO FACILITATE SCHEDULING OF DEPARTMENT SHOP INSPECTIONS, ALL SHOP FABRICATION SHALL BE CLEARLY IDENTIFIED IN THE FINALIZED DETAILED CPM SCHEDULE, AND MILESTONE DATES ESTABLISHED FOR TIMES WHEN DEPARTMENT SHOP INSPECTIONS ARE REQUIRED.

ADD THE FOLLOWING:

SHOP INSPECTIONS SHALL BE SCHEDULED BY THE DEPARTMENT WHEN INDICATED ON THE APPROVED FINALIZED DETAILED CPM SCHEDULE. IF REVISION TO THOSE DATES ARE NECESSARY, THE CONTRACTOR SHALL NOTIFY THE ENGINEER A MINIMUM OF 14 DAYS PRIOR TO THE NECESSARY REVISION. IF REVISION OF DATES OCCUR, OR IF REINSPECTION IS NECESSARY DUE TO DEFECTIVE WORK, THE DEPARTMENT WILL MAKE EVERY EFFORT TO RESCHEDULE.

IF REINSPECTION IS REQUIRED DUE TO DEFECTIVE WORK, THE CONTRACTOR SHALL BE RESPONSIBLE FOR ALL DEPARTMENTAL COSTS ASSOCIATED WITH REINSPECTION INCLUDING, BUT NOT LIMITED TO SALARIES, SALARY RELATED OVERHEAD, TRAVEL EXPENSES AND SUBSISTENCE.
SHOULD REINSPECTION COSTS BE ASSESSED, THE DEPARTMENT WILL DOCUMENT THE COSTS AND DEDUCT THE CERTIFIED AMOUNT FROM THE CONTRACT BY CHANGE ORDER.

THIS ITEM SHALL INCLUDE THE COMPLETE REMOVAL OF DESIGNATED STRUCTURAL STEEL MEMBERS OR PORTIONS THEREOF TO THE LIMITS SHOWN ON THE PLANS OR TO THE LIMITS DIRECTED BY THE ENGINEER. REMOVAL SHALL BE IN ACCORDANCE WITH APPLICABLE PROVISIONS OF ITEM 202, PORTIONS OF STRUCTURES REMOVED, AS PER PLAN, BUT INCLUDED WITH ITEM 513 FOR PAYMENT.

FASTENERS CONNECTING NEW STEEL TO EXISTING STEEL SHALL BE REMOVED AND REPLACED IN ACCORDANCE WITH ITEM SPECIAL, REPLACE EXISTING FASTENERS WITH NEW HIGH STRENGTH BOLTS. HOLES IN NEW MATERIAL WHICH MATCH TO EXISTING HOLES SHALL BE LOCATED WITH SUFFICIENT ACCURACY TO MEET THE REQUIREMENTS OF 513.14, AND SHALL BE MADE BY ANY OF THE FOLLOWING METHODS:

(1) ACCURATE FIELD MEASUREMENTS AND EXAMINATION OF EXISTING SHOP DRAWINGS BY THE CONTRACTOR SHALL BE USED FOR LOCATING HOLES IN NEW MATERIAL TO BE SUBPUNCHED OR DRILLED UNDERSIZE IN THE SHOP. THE HOLES SHALL BE REAMED TO PROPER SIZE IN THE FIELD AFTER FIT-UP TO THE EXISTING HOLES.

(2) MAKE TEMPLATES IN THE FIELD OF HOLE PATTERNS AND LOCATION AFTER REMOVAL OF FASTENERS. USE THE FIELD TEMPLATES IN THE SHOP TO PUNCH OR DRILL STANDARD SIZE HOLES.

(3) FURNISH NEW STRUCTURAL STEEL WITHOUT SHOP HOLES FOR CONNECTION TO EXISTING HOLES. HOLES IN NEW MATERIAL TO BE FIELD DRILLED TO MATCH EXISTING HOLES.

FULL SIZE HOLES SHALL NOT BE ENLARGED TO OBTAIN PROPER FIT EXCEPT AS AUTHORIZED BY THE ENGINEER.

THE FOLLOWING SHALL BE CONSIDERED AS INCIDENTAL TO THE PAY WEIGHT OF A MEMBER:

(1) ACCESS FOR REMOVAL AND REPLACEMENT.

(2) ANY REQUIRED TEMPORARY SHORING.

(3) ANY REQUIRED FIELD DRILLING (NEW OR EXISTING STEEL).

(4) CLEANING EXISTING SURFACES OF PAINT, RUST, ETC.

(5) REMOVAL AND REINSTALLATION OF ADJOINING MEMBERS TO BE REUSED.

(6) REMOVAL OF MEMBER BEING REPLACED.

(7) ANY REQUIRED FIELD WELDING.

FIELD WELDING WILL BE PERMITTED ONLY AS SPECIFIED IN THE PLANS OR AS AUTHORIZED BY THE ENGINEER.

ANY ADDITIONAL STEEL MEMBERS NOT COVERED IN THE PLANS TO BE FABRICATED UNDER THIS ITEM WILL NOT REQUIRE SHOP DRAWINGS PRIOR TO FABRICATION. THE CONTRACTOR SHALL MAKE NECESSARY MEASUREMENTS AND PREPARE SKETCHES, DRAWINGS, TABLES, ETC. THE ENGINEER SHALL HAVE AUTHORITY AND RESPONSIBILITY FOR ENSURING THAT THE FABRICATED STEEL IS ACCEPTABLE. TECHNICAL ASSISTANCE WILL BE PROVIDED ON REQUEST BY THE BUREAU OF BRIDGES. MILL TEST REPORTS AND SHIPPING DOCUMENTS SHALL BE SUBMITTED TO THE ENGINEER FOR REVIEW AND APPROVAL PRIOR TO INCORPORATING STEEL ITEMS INTO THE WORK, AS REQUIRED BY 501.07. AFTER FABRICATION, THE CONTRACTOR SHALL SUBMIT SHOP DRAWINGS TO THE ENGINEER FOR REVIEW AND APPROVAL TO ENSURE THAT THE DRAWINGS DEPICT THE STEEL AS ACTUALLY INCORPORATED INTO THE WORK. THE ENGINEER WILL THEN SEND ONE APPROVED SET TO THE BUREAU OF BRIDGES FOR INFORMATION. PAY WEIGHTS SHALL BE SUBMITTED TO THE ENGINEER FOR HIS REVIEW AND APPROVAL. THE FABRICATOR SHALL FURNISH A 35 MILLIMETER MICROFILM COPY OF EACH SHOP DRAWING, WHICH SHALL BE MOUNTED ON AN APERTURE CARD AS SPECIFIED IN 501.05.

COUNTY BRIDGE NO. 84

HOWARD NEEDLES TAMMEN & BERGENDOFF
ARCHITECTS ENGINEERS PLANNERS
HNTB

GENERAL NOTES
BR. NO. CUY - 6 - 1499
REHABILITATION OF
VETERANS MEMORIAL BRIDGE
(U.S. 6, 20, 42 & S.R. 3 OVER CUYAHOGA RIVER)
CLEVELAND CUYAHOGA COUNTY OHIO

DRAWN	TRACED	CHECKED	REVIEWED	REVISED
B.E.B.	B.F.	A.D.Y.	C.A.B.	
DATE 3/22/94	DATE 3/28/94	DATE 3/30/94	DATE 3/31/94	SHEET 7 /270

GENERAL NOTES - STRUCTURES OVER 20-FT SPAN

513.03 MATERIALS. ADD THE FOLLOWING:

EACH SHIPMENT OF HIGH STRENGTH BOLTS, INCLUDING NUTS AND WASHERS SHALL BE ACCOMPANIED BY A NOTARIZED CERTIFICATE ISSUED BY THE MANUFACTURER ATTESTING TO THE FACT THAT THESE FASTENERS ARE MANUFACTURED IN THE U.S.A. AND A COPY OF TEST RESULTS PERFORMED BY THE APPROVED TESTING LABORATORY CONFIRMING THE COMPLIANCE OF THESE FASTENERS TO THE REQUIREMENTS OF 711.09. MATERIALS COVERED BY THE PLANT SAMPLING AND TESTING PLAN (SECTION 106.04) WILL BE CONSIDERED TO HAVE MET THESE REQUIREMENTS.

THE DEPARTMENT RESERVES THE RIGHT TO RANDOMLY SELECT AND TEST HIGH STRENGTH BOLTS, NUTS AND WASHERS FOR COMPLIANCE WITH THE REQUIREMENTS OF THESE SPECIFICATIONS.

513.15 HIGH-STRENGTH STEEL BOLTS, NUTS AND WASHERS. ADD THE FOLLOWING:

HIGH STRENGTH BOLTS SHALL BE ASTM A325, GALVANIZED, OF THE SIZES SPECIFIED IN THE PLANS.

513.23 METHOD OF MEASUREMENT. ADD THE FOLLOWING:

IN CASE OF DIFFERENCE IN WEIGHT BETWEEN A NEW MEMBER AND AN EXISTING MEMBER, THE QUANTITY OF STRUCTURAL STEEL TO BE PAID FOR SHALL BE BASED ON THE APPROVED PAY WEIGHT FOR THE NEW MEMBER.

513.24 BASIS OF PAYMENT. ADD THE FOLLOWING:

AN ALLOWANCE OF 20,000 LBS. IS INCLUDED WITH ITEM 513, STRUCTURAL STEEL (AISC CATEGORY I), AS PER PLAN, TO COVER REMOVAL AND REPLACEMENT OF ADDITIONAL STEEL MEMBERS WITH PAY WEIGHTS GREATER THAN FIFTY (50) POUNDS, AS DIRECTED BY THE ENGINEER. THIS QUANTITY IS LISTED IN THE "GENERAL " COLUMN OF THE ESTIMATED QUANTITIES TABLE.

30. ITEM SPECIAL - STRUCTURAL STEEL (AISC CATEGORY I)

ALL PROVISIONS OF ITEM 513, STRUCTURAL STEEL (AISC CATEGORY I), AS PER PLAN, SHALL APPLY EXCEPT AS MODIFIED HEREIN.

THIS WORK SHALL BE A CONTINGENCY ITEM COVERING ANY ADDITIONAL STRUCTURAL STEEL MEMBER REMOVAL AND REPLACEMENTS NOT COVERED IN THE PLANS AS DIRECTED BY THE ENGINEER FOR MEMBERS WITH PAY WEIGHTS EQUAL TO OR LESS THAN FIFTY (50) POUNDS.

31. ITEM SPECIAL - REPLACE EXISTING FASTENERS WITH NEW HIGH STRENGTH BOLTS

A. DESCRIPTION

THIS WORK SHALL CONSIST OF REMOVING AN EXISTING FASTENER (BOLT OR RIVET) AND REPLACEMENT WITH A NEW A325 HIGH STRENGTH BOLT OF THE SAME SIZE AS THE REMOVED FASTENER. THIS ITEM APPLIES IN THE FOLLOWING SITUATIONS:

1. FASTENERS WHICH CONNECT A NEW STEEL MEMBER TO AN EXISTING STEEL MEMBER, WHERE EXISTING FASTENERS HAVE BEEN REMOVED.

2. ANY EXISTING DETERIORATED FASTENERS TO BE REPLACED AS DIRECTED BY THE ENGINEER.

THE REQUIREMENTS OF THIS ITEM APPLY FOR REMOVAL AND REPLACEMENT OF FASTENERS CONNECTING EXISTING STEEL TO EXISTING STEEL, WHICH IS TO BE REMOVED AND REERECTED FOR CONSTRUCTION PURPOSES, HOWEVER, NO SEPARATE PAYMENT WILL BE MADE FOR THIS WORK.

B. REQUIREMENTS

THE SEQUENCE AND THE METHOD OF WORK SHALL BE DETERMINED BY THE CONTRACTOR AND AS APPROVED BY THE ENGINEER. BURNING THROUGH THE SHANK OF THE FASTENER USING CUTTING TORCHES WILL NOT BE PERMITTED. THE DETAILS OF THE CONTRACTOR'S PROPOSED METHOD SHALL BE SUBMITTED TO THE ENGINEER FOR APPROVAL.

EXISTING STEEL ADJACENT TO A REMOVED FASTENER WHICH IS ROUGH OR UNEVEN SHALL BE CLEANED OF ALL PAINT AND RUST AND GROUND SMOOTH TO PROVIDE FULL BEARING OF THE NEW FASTENER AND/OR WASHER WITH THE EXISTING STEEL. BOLTS SHALL BE FURNISHED AND INSTALLED IN ACCORDANCE WITH ITEM 513, STRUCTURAL STEEL (AISC CATEGORY 1), AS PER PLAN.

THE CONTRACTOR SHALL EXERCISE EXTREME CARE DURING THE REMOVAL OPERATION SO AS NOT TO DAMAGE THE UNDERLYING CONNECTED MATERIALS. ANY DAMAGE TO THE CONNECTED MATERIAL DUE TO THE CONTRACTOR'S REMOVAL OPERATION SHALL BE RECTIFIED TO THE SATISFACTION OF THE ENGINEER AT THE CONTRACTOR'S EXPENSE.

C. METHOD OF MEASUREMENT

THE QUANTITY WILL BE MEASURED AS THE ACTUAL NUMBER OF FASTENERS REMOVED AND REPLACED AS SPECIFIED. THE QUANTITY SO MEASURED SHALL INCLUDE ALL LABOR, MATERIALS, EQUIPMENT AND INCIDENTALS NECESSARY TO SATISFACTORILY PERFORM THIS WORK.

D. BASIS OF PAYMENT

THE PAYMENT WILL BE MADE AT THE CONTRACT UNIT PRICE BID FOR:

ITEM	UNIT	DESCRIPTION
SPECIAL	EACH	REPLACE EXISTING FASTENERS WITH NEW HIGH STRENGTH BOLTS

AN ALLOWANCE OF 2,000 EA. IS INCLUDED WITH ITEM SPECIAL, REPLACE EXISTING FASTENERS WITH NEW HIGH STRENGTH BOLTS TO COVER REMOVAL AND REPLACEMENT OF ADDITIONAL STEEL MEMBERS AND DETERIORATED FASTENERS AS DIRECTED BY THE ENGINEER. THIS QUANTITY IS LISTED IN THE "GENERAL" COLUMN OF THE ESTIMATED QUANTITIES TABLE.

32. ITEM SPECIAL - REPLACEMENT OF STRUCTURAL STEEL PINS AND HANGERS

A. DESCRIPTION

THIS WORK SHALL CONSIST OF TEMPORARY SHORING, REMOVAL AND REPLACEMENT OF ALL PIN AND HANGER ASSEMBLIES ON SPAN 4 FROM PANEL POINT 4 THRU PANEL POINT 4'. ALL PROVISIONS OF ITEM 513, STRUCTURAL STEEL (AISC CATEGORY I), AS PER PLAN, SHALL APPLY EXCEPT AS MODIFIED HEREIN.

B. MATERIALS

PINS SHALL MEET THE REQUIREMENTS OF ASTM A668 CLASS F. HANGERS SHALL MEET THE REQUIREMENTS OF ASTM A572 GRADE 50. ALL MATERIAL SHALL BE CVN, HAVING A CHARPY V NOTCH IMPACT VALUE OF 25 FT-LB @ 20 DEGREES F. PIN NUTS SHALL MEET THE REQUIREMENTS OF ASTM A27.

C. REQUIREMENTS

THE CONTRACTOR SHALL SUBMIT TO THE ENGINEER FOR APPROVAL A PROCEDURE FOR PROVIDING TEMPORARY SHORING OF THE EXISTING FLOORBEAMS AND REMOVAL AND REPLACEMENT OF THE PIN AND HANGER ASSEMBLIES. THE PROPOSED PROCEDURE SHALL BE SEALED BY A REGISTERED PROFESSIONAL ENGINEER. IN ORDER TO REMOVE THE PINS AND HANGERS, PORTIONS OF THE EXISTING STRUCTURE WILL NEED TO BE CUT, AS SHOWN IN THE PLANS. ALL CUT SURFACES SHALL BE GROUND SMOOTH.

THE FINISHED PINS SHALL BE 100 PERCENT ULTRASONICALLY TESTED IN ACCORDANCE WITH ASTM A388 AND 100 PERCENT MAGNETIC PARTICLE TESTED IN ACCORDANCE WITH ASTM A275. NONDESTRUCTIVE ACCEPTANCE CRITERIA SHALL BE BASED ON SECTIONS 9.25.2 AND 9.25.3 OF THE AMERICAN WELDING SOCIETY'S BRIDGE WELDING CODE, AWS D1.5, AND ANY CRACKS FOUND SHALL BE CAUSE FOR AUTOMATIC REJECTION OF THE PINS. ANY ITEMS FAILING THE NONDESTRUCTIVE TESTING SHALL BE REPLACED. THE CONTRACTOR SHALL HAVE ALL NONDESTRUCTIVE TESTING PERFORMED BY PERSONNEL QUALIFIED AT LEVEL II OR III IN ACCORDANCE WITH THE AMERICAN SOCIETY OF NONDESTRUCTIVE TESTING'S (ASNT) RECOMMENDED PRACTICE NO. SNT-TC-1A. DEPARTMENT PERSONNEL SHALL BE PRESENT DURING THE TESTING TO WITNESS THE PROCEDURE AND REVIEW THE RESULTS OF THE TESTING.

THE FINISHED HANGERS SHALL BE 100 PERCENT NONDESTRUCTIVELY TESTED BY THE ULTRASONIC AND MAGNETIC PARTICLE METHODS IN ACCORDANCE WITH THE AMERICAN WELDING SOCIETY'S BRIDGE WELDING CODE, AWS D1.5. NONDESTRUCTIVE ACCEPTANCE CRITERIA SHALL BE BASED ON SECTIONS 3.2.3.7, 9.25.2 AND 9.25.3 BRIDGE WELDING CODE, AWS D1.5, AND ANY CRACKS FOUND SHALL BE CAUSE FOR AUTOMATIC REJECTION OF THE HANGERS. ANY ITEMS FAILING THE NONDESTRUCTIVE TESTING SHALL BE REPLACED. THE CONTRACTOR SHALL HAVE ALL NONDESTRUCTIVE TESTING PERFORMED BY PERSONNEL QUALIFIED AT LEVEL II OR III IN ACCORDANCE WITH THE AMERICAN SOCIETY OF NONDESTRUCTIVE TESTING'S (ASNT) RECOMMENDED PRACTICE NO. SNT-TC-1A. DEPARTMENT PERSONNEL SHALL BE PRESENT DURING THE TESTING TO WITNESS THE PROCEDURE AND REVIEW THE RESULTS OF THE TESTING. THE ESTIMATED HANGER LOAD IN EACH PAIR OF HANGERS AT A PANEL POINT IS AS FOLLOWS:

LOADS WITH UPPER DECK REMOVED, LOWER DECK TIES IN PLACE: (NEGLECTING WEIGHT OF HANGERS)

	NORTH SIDE	SOUTH SIDE
PANEL POINTS 4 AND 4'	34K	48K
PANEL POINTS 5 AND 5'	34K	48K
PANEL POINTS 6 THRU 6'	82K	96K

LOADS WITH NEW UPPER DECK AND LOWER DECK IN PLACE: (INCLUDING SIDEWALKS AND RAILINGS)

	NORTH SIDE	SOUTH SIDE
PANEL POINTS 4 AND 4'	32K	46K
PANEL POINTS 5 AND 5'	32K	46K
PANEL POINTS 6 THRU 6'	221K	235K

THE LENGTHS OF THE NEW HANGER BARS SHALL BE DETERMINED SO THAT THE NEW DECK PROFILE GRADE MATCHES THE EXISTING.

IT IS IMPORTANT THAT AT ANY PARTICULAR PANEL POINT LOCATION THE LOADS IN EACH HANGER BAR MUST BE APPROXIMATELY EQUAL UNDER FINAL DEAD LOAD AT THAT PANEL POINT. THE CONTRACTOR'S PROCEDURE SHALL ADDRESS THIS ITEM.

THE CONTRACTOR SHALL RETAIN THE SERVICES OF A RECOGNIZED TESTING LABORATORY AS APPROVED BY THE ENGINEER FOR THE PURPOSE OF IMPLEMENTING AND MONITORING A STRAIN GAGE MEASUREMENT PROGRAM. THE TESTING LABORATORY MUST HAVE PREVIOUS EXPERIENCE IN THIS TYPE OF WORK.

IMMEDIATELY AFTER INSTALLING THE NEW HANGER IN IT'S NO LOAD POSITION, STRAIN GAGES SHALL BE ATTACHED TO THE HANGER. BEFORE COMMENCING ANY CONSTRUCTION THE LOADS IN EACH HANGER BAR SHALL BE MEASURED AND THE RESULTS FURNISHED TO THE ENGINEER. THE CONTRACTOR WILL BE REQUIRED TO ADJUST THE HANGER BAR TENSIONS AT ANY LOCATION WHERE THE DIFFERENCE IN TENSION BETWEEN THE TWO BARS IS GREATER THAN TEN (10) PERCENT OF THE TOTAL LOAD IN THE TWO BARS. THE PROCEDURE FOR EQUALIZING LOADS MAY BE SIMILAR TO THAT SPECIFIED IN CHAPTER 15, ARTICLE 8.2 OF THE AMERICAN RAILWAY ENGINEERING ASSOCIATION ALTERNATE SPECIFICATIONS, OR BY THE CONTRACTOR'S APPROVED ALTERNATE. IN ORDER TO MINIMIZE THE POSSIBILITY OF LARGE DIFFERENCES IN THE TENSIONS BETWEEN EACH BAR OF A HANGER, IT IS ESSENTIAL THAT THE CENTER TO CENTER HOLE DIMENSIONS FOR EACH PAIR OF BARS BE HELD TO AS TIGHT OF A TOLERANCE AS POSSIBLE IN THE FABRICATION.

GENERAL NOTES - STRUCTURES OVER 20-FT SPAN

FHWA REGION	STATE	PROJECT	
5	OHIO		

140/412

CUYAHOGA COUNTY
CUY - 6 - 14.99

AFTER ALL HANGERS ARE WITHIN TOLERANCE THE UPPER DECK SHALL BE CONSTRUCTED AND THE HANGER BAR TENSIONS RECHECKED. THE ADJUSTMENT PROCEDURE SHALL BE REPEATED FOR ANY PAIRS OF BARS OUT OF TOLERANCE.

THE PINS AND HANGERS SHALL BE LUBRICATED USING CHEVRON ULTRA DUTY TWO GREASE, OR APPROVED EQUAL.

D. METHOD OF MEASUREMENT:

THE QUANTITY WILL BE MEASURED IN ACCORDANCE WITH 513.23. COTTER PINS AND GREASE FITTINGS WILL NOT BE CONSIDERED AS PAY WEIGHT BUT SHALL BE CONSIDERED INCIDENTAL TO THIS ITEM. THE QUANTITY SO MEASURED SHALL INCLUDE ALL LABOR, MATERIALS, EQUIPMENT AND INCIDENTALS NECESSARY TO SATISFACTORILY PERFORM THE WORK OF THIS ITEM.

E. BASIS OF PAYMENT

THE PAYMENT WILL BE MADE AT THE CONTRACT UNIT PRICE BID FOR:

ITEM	UNIT	DESCRIPTION
SPECIAL	POUND	REPLACEMENT OF STRUCTURAL STEEL PINS AND HANGERS

33. ITEM SPECIAL - OPEN GRID STEEL FLOOR

A. DESCRIPTION

THIS ITEM SHALL CONSIST OF FURNISHING AND INSTALLING OPEN GRID STEEL ROADWAY DECK IN ACCORDANCE WITH THESE SPECIFICATIONS AND WITHIN REASONABLY CLOSE CONFORMITY TO THE LINES, GRADES, LOCATIONS, DETAILS AND NOTES SHOWN ON THE PLANS.

THE OPEN GRID STEEL ROADWAY DECK SHALL BE DESIGNED TO SUPPORT A HIGHWAY LOADING OF CLASS HS 20-44 AS DEFINED AND ESTABLISHED IN ACCORDANCE WITH THE REQUIREMENT OF CURRENT AASHTO STANDARD SPECIFICA-SPECIFICATIONS FOR HIGHWAY BRIDGES AND THE OHIO SUPPLEMENT TO AASHTO SPECIFICATIONS.

B. MATERIALS

THE STRUCTURAL STEEL SHALL BE ASTM A588, AND SHALL CONFORM TO ITEM 513 OF THE CONSTRUCTION AND MATERIAL SPECIFICATIONS.

C. FABRICATION

THE FABRICATION AND CONSTRUCTION OF THE OPEN GRID STEEL ROADWAY DECK SHALL BE IN ACCORDANCE WITH SECTION 513 OF THE STANDARD SPECIFICATIONS.

THE MAIN BEARING MEMBERS SHALL BE SPECIAL ROLLED SECTIONS 5 3/16" DEEP WEIGHING AT LEAST 5.5#/L.F. AND BE SPACED AT 8" CENTERS. TWO SUPPLEMENTARY BARS SHALL BE 5/16" x 1" AND SHALL BE EVENLY SPACED BETWEEN THE MAIN MEMBERS. THE CROSS BARS SHALL BE AT LEAST 2" DEEP x 1/4" THICK INTERSECTING PERPENDICULARLY TO THE MAIN BEARING MEMBERS AND SHALL ALSO BE SPACED AT 4" CENTERS. THE MAIN MEMBERS, THE SUPPLEMENTARY BARS, AND THE CROSS BARS SHALL BE SUCH THAT AT LEAST A 5/8" DEPTH OF MATERIAL IS AVAILABLE AT TOP SUPPLEMENTARY BARS, AND CROSS BARS SHALL BE SERRATED AND SHALL BE IN THE SAME PLANE.

THE OPEN GRID STEEL ROADWAY DECK SHALL BE SHOP FABRICATED IN UNITS WHICH ARE SUFFICIENT FOR FULL WIDTH DECK PLACEMENT AS SHOWN ON THE PLANS AND WITHOUT A FIELD JOINT IN THE BRIDGE'S LONGITUDINAL DIRECTION.

ALL SHOP JOINTS SHALL BE MADE USING FULL PENETRATION BUTT WELDS.

D. CONSTRUCTION

THE CONTRACTOR SHALL FURNISH SHOP DRAWINGS IN CONFORMANCE WITH THE REQUIREMENTS OF ITEM 513, STRUCTURAL STEEL (AISC CATEGORY I), AS PER PLAN. THE SHOP DRAWINGS SHALL INDICATE ALL MATERIAL SPECIFICATIONS AND DIMENSIONS AND ANY ADDITIONAL DETAILS NOT SHOWN ON THE PLANS. THE CONTRACTOR SHALL ALSO FURNISH DESIGN CALCULATIONS SHOWING THAT THE OPEN GRID STEEL ROADWAY DECK IS DESIGNED TO SUPPORT A HIGHWAY LOADING OF HS 20-44 AS DESCRIBED PREVIOUSLY IN THIS SPECIFICATION. APPROVAL OF THE DESIGN CALCULATIONS AND SHOP DRAWINGS SHALL BE REQUIRED PRIOR TO FABRICATION AND INSTALLATION OF THE OPEN GRID STEEL ROADWAY DECK.

A REPRESENTATIVE OF THE DECK MANUFACTURER SHALL BE PRESENT PRIOR TO AND DURING THE INITIAL DECK INSTALLATION TO FURNISH TECHNICAL ASSISTANCE AND GUIDANCE TO THE CONTRACTOR AND ENGINEER. HE SHALL REMAIN ON THE PROJECT UNTIL HE IS ASSURED THAT THE INSTALLATION OF THE DECK IS BEING ACCOMPLISHED TO HIS SATISFACTION. WHERE SPECIFIC INSTRUCTIONS ARE NOT CONTAINED HEREIN, DIRECTION FOR THE INSTALLATION SHALL BE ACCORDING TO THE MANUFACTURER'S RECOMMENDATIONS.

THE CONTRACTOR SHALL BE RESPONSIBLE FOR NOTIFYING THE MANUFACTURER'S REPRESENTATIVE OF THE DATE OF THE DECK INSTALLATION AND HE SHALL COORDINATE THE WORK AS NECESSARY TO ENSURE THAT THIS REPRESENTATIVE WILL BE AT THE SITE TO GIVE GUIDANCE FOR THIS PHASE OF THE WORK.

THE NEW DECK SHALL BE PLACED INTO POSITION AND SECURELY WELDED TO THE FLOOR FRAMING MEMBERS AS SHOWN ON THE PLANS. PLACEMENT SHALL BE IN ACCORDANCE WITH DECK REMOVAL AND REPLACEMENT SEQUENCE - SPAN 4, AS SPECIFIED IN GENERAL NOTE 34.

E. METHOD OF MEASUREMENT

THIS WORK WILL BE MEASURED AS THE SQUARE FEET OF OPEN GRID STEEL ROADWAY DECK ACCEPTABLY INSTALLED IN PLACE. THE QUANTITY SO MEASURED SHALL INCLUDE ALL LABOR, MATERIALS, EQUIPMENT AND INCIDENTALS NECESSARY TO SATISFACTORILY PERFORM THIS WORK.

F. PAYMENT

PAYMENT WILL BE MADE AT THE CONTRACT UNIT PRICE BID FOR:

ITEM	UNIT	DESCRIPTION
SPECIAL	SQ. FT.	OPEN GRID STEEL FLOOR

34. DECK REMOVAL AND REPLACEMENT SEQUENCE - SPAN 4

THE EXISTING CONCRETE UPPER DECK AND TIMBER LOWER DECK SHALL BE REMOVED IN A SYMMETRIC SEQUENCE ABOUT THE CENTER OF THE SPAN. IN ADDITION, THE CANTILEVER PORTIONS OF THE UPPER DECK SHALL ALSO BE REMOVED IN A SYMMETRIC SEQUENCE ABOUT THE CENTERLINE OF THE BRIDGE. THE REMOVAL SHALL NOT BE UNBALANCED BY MORE THAN 100 FEET FOR EITHER DECK. BOTH DECKS SHALL NOT BE UNBALANCED SIMULTANEOUSLY.

DECK PLACEMENT SHALL PROGRESS FROM EACH END OF THE SPAN SIMULTANEOUSLY. THE CANTILEVER PORTIONS OF THE DECK MAY BE PLACED IN SEPARATE POURS FROM THE REMAINDER OF THE DECK, HOWEVER THEY SHALL BE PLACED IN A SYMMETRIC SEQUENCE. THE DECK PLACEMENT SHALL NOT BE UNBALANCED BY MORE THAN 125 FEET FOR EITHER DECK. BOTH DECKS SHALL NOT BE UNBALANCED SIMULTANEOUSLY.

THE UPPER DECK OVER PIERS 3 AND 4 AND THE STRIP SEALS AT FLOORBEAMS 0 AND 0' SHALL NOT BE INSTALLED UNTIL THE UPPER DECK, SIDEWALKS AND RAILINGS OF SPAN 4 HAVE BEEN IN PLACE FOR A MINIMUM OF FORTY FIVE (45) DAYS.

35. TOP OF STRINGER ELEVATIONS

IN ORDER TO MEET ROADWAY GRADES, TO PROVIDE THE REQUIRED THICKNESS OF DECK SLABS AND TO ATTAIN THE PROPER LOCATIONS OF THE REINFORCING STEEL IN THE DECK SLAB OF SPAN 4 THE CONTRACTOR SHALL OBTAIN THE ELEVATIONS OF THE TOP OF STRINGER FLANGE AT EACH FLOOBEAM/STRINGER INTERSECTION BEFORE AND AFTER THE COMPLETE REMOVAL OF THE EXISTING CONCRETE DECK. THIS WORK SHALL BE DONE WITH NO LIVE LOAD ON THE SPAN AND THE LOWER DECK SHALL BE EITHER ENTIRELY IN-PLACE OR ENTIRELY REMOVED DURING THE SURVEY. BASED ON THESE ELEVATIONS, THE CONTRACTOR SHALL DETERMINE THE DEFLECTION DUE TO DECK REMOVAL AT EACH FLOORBEAM/STRINGER INTERSECTION.

THE CONTRACTOR SHALL ADJUST THE DEFLECTIONS DUE TO DECK REMOVAL BY A FACTOR OF 0.73 WHICH IS OBTAINED FROM THE DIFFERENCE IN WEIGHT BETWEEN THE EXISTING UPPER AND LOWER DECKS AND THE NEW UPPER AND LOWER DECKS. THIS FACTOR IS BASED ON THE EXISTING LOWER DECK BEING IN-PLACE WHEN THE ELEVATIONS ARE SURVEYED AND THE NEW LOWER DECK IS IN-PLACE WHEN THE UPPER DECK IS PLACED. IF THE CONTRACTOR USES A DIFFERENT PROCEDURE, THE FACTOR MUST BE ADJUSTED ACCORDINGLY. BASED ON THE FINAL FLOORBEAM/STRINGER INTERSECTION DEFLECTIONS, THE CONTRACTOR SHALL DETERMINE THE SCREED ELEVATIONS TO PROVIDE THE FINAL DECK ELEVATIONS AS SHOWN IN THE PLANS. ALL CALCULATIONS TO DETERMINE THE SCREED ELEVATIONS INCLUDING THE SURVEYED ELEVATIONS SHALL BE SUBMITTED TO THE ENGINEER FOR APPROVAL. THE COST OF THE CONTRACTOR'S WORK SHALL BE INCLUDED IN THE LUMP SUM PRICE BID FOR ITEM 623, CONSTRUCTION LAYOUT STAKES, AS PER PLAN.

36. FINISHING MACHINE SUPPORTS

WELDED ATTACHMENT OF SUPPORTS FOR A CONCRETE DECK FINISHING MACHINE MAY BE MADE TO TOP STRINGER FLANGES AND SHALL NOT BE CLOSER THAN 1" FROM EDGE OF FLANGE, NOT MORE THAN 2" LONG, AND NOT BE SMALLER THAN THE MINIMUM SIZE REQUIRED BY AASHTO. SUPPORTS SHALL NOT BE WELDED TO FLOORBEAM FLANGES.

37. ITEM SPECIAL - CLASS S LIGHTWEIGHT CONCRETE, SUPERSTRUCTURE, USING SHRINKAGE COMPENSATING CEMENT

A. DESCRIPTION

THIS ITEM SHALL CONSIST OF FURNISHING AND PLACING PORTLAND CEMENT LIGHTWEIGHT CONCRETE USING SHRINKAGE COMPENSATING CEMENT FOR THE BRIDGE SUPERSTRUCTURE IN ACCORDANCE WITH ALL APPLICABLE PROVISIONS OF ITEM 511 OF THE STANDARD SPECIFICATIONS, EXCEPT AS MODIFIED HEREIN, AND IN REASONABLY CLOSE CONFORMITY WITH LINES, GRADES AND DIMENSIONS SHOWN ON THE PLANS.

B. MATERIALS

MATERIALS SHALL BE:

PORTLAND CEMENT - SHRINKAGE COMPENSATING CEMENT CONFORMING TO ASTM C845, TYPE K

FINE AGGREGATE - NATURAL SAND IN ACCORDANCE WITH 703.02

COARSE AGGREGATE - LIGHTWEIGHT COARSE AGGREGATE SHALL CONSIST ONLY OF PROCESSED AGGREGATES PREPARED FROM NATURAL DEPOSITS OF SHALES OR CLAYS, PRODUCED BY A ROTARY KILN OPERATION, AND MEETING THE REQUIREMENTS OF ASTM C330. THE COARSE AGGREGATE SIZE DESIGNATION SHALL RANGE FROM 3/4 INCH TO NO. 4 ONLY. FURNACE SLAGS OR FLY ASHES WILL NOT BE ACCEPTABLE. THE LIGHTWEIGHT AGGREGATE PILE SHALL BE KEPT IN A STABLE, UNIFORM DAMP CONDITION. SATURATED AGGREGATES SHALL NOT BE USED WHEN THE CONCRETE IS SUBJECT TO FREEZING AND THAWING DURING THE CURING CYCLE, DUE TO DAMAGE WHICH COULD RESULT FROM SUCH EXPOSURE.

WATER - WATER WHICH IS POTABLE IS SATISFACTORY

AIR ENTRAINING ADMIXTURE - IN ACCORDANCE WITH 705.10 AS APPROVED BY THE ENGINEER

CHEMICAL ADMIXTURE - WHEN REQUIRED BY 511.06, SHALL BE LIMITED TO TYPE B.

COUNTY BRIDGE NO. 84

HOWARD NEEDLES TAMMEN & BERGENDOFF
ARCHITECTS ENGINEERS PLANNERS
HNTB

GENERAL NOTES
BR. NO. CUY - 6 - 1499
REHABILITATION OF
VETERANS MEMORIAL BRIDGE
(U.S. 6, 20, 42 & S.R. 3 OVER CUYAHOGA RIVER)
CLEVELAND CUYAHOGA COUNTY OHIO

DRAWN	TRACED	CHECKED	REVIEWED	REVISED
B.E.B.	B.F.	A.D.Y.	C.A.B.	
DATE 3/22/94	DATE 3/28/94	DATE 3/30/94	DATE 3/31/94	SHEET 9 /270

GENERAL NOTES - STRUCTURES OVER 20-FT SPAN

FHWA REGION	STATE	PROJECT	
5	OHIO		

141/412

CUYAHOGA COUNTY
CUY - 6 - 14.99

C. PROPORTIONING

THE CONTRACTOR (ADVISED BY THE LIGHTWEIGHT AGGREGATE SUPPLIER) SHALL BE RESPONSIBLE FOR DESIGNING THE MIXTURE AND DETERMINING THE PROPORTIONS OF CEMENT, FINE AGGREGATE, COARSE AGGREGATE, WATER, AIR-ENTRAINMENT AND CHEMICAL ADMIXTURE IN ACCORDANCE WITH ACI 211.2 WHICH WILL PRODUCE A WORKABLE LIGHTWEIGHT CONCRETE MIX MEETING THE FOLLOWING REQUIREMENTS:

28 DAY AIR DRY UNIT WEIGHT - WITH A DESIGN AVERAGE UNIT WEIGHT OF 115 POUNDS PER CUBIC FOOT AND A PERMISSIBLE RANGE VARYING FROM 113 POUNDS PER CUBIC FOOT TO 117 POUNDS PER CUBIC FOOT. AN ADDITIONAL 3 POUNDS PER CUBIC FOOT SHALL BE PERMITTED FOR CONCRETE WHICH IS PUMPED.

28 DAY COMPRESSIVE STRENGTH - 4,500 PSI (MINIMUM)

CEMENT CONTENT - 715 POUNDS PER CUBIC YARD (MINIMUM)

SLUMP - 5 INCHES PLUS OR MINUS 1 INCH

AIR CONTENT - 7 PERCENT PLUS OR MINUS 2 PERCENT

WATER-CEMENT RATIO - 0.50 TO 0.55 MAXIMUM, USING DAMP LIGHTWEIGHT AGGREGATES; 0.81 TO 0.86 MAXIMUM, TOTAL WATER INCLUDING THE ABSORBED WATER.

ALL LIGHTWEIGHT CONCRETE SHALL HAVE GOOD WORKABILITY AND OTHER PROPERTIES SUCH THAT PROPER PLACEMENT, CONSOLIDATION AND FINISHING IS OBTAINED.

THE LIGHTWEIGHT CONCRETE MIX DESIGN SUBMITTED BY THE CONTRACTOR SHALL BE TESTED BY A RECOGNIZED TESTING LABORATORY WHICH IS REGULARLY INSPECTED BY THE CEMENT AND CONCRETE REFERENCE LABORATORY (CCRL) AND APPROVED BY THE ENGINEER. THE MIX DESIGN SHALL BE TESTED USING THE DAMP LOOSE VOLUMETRIC METHOD AS OUTLINED IN ACI 213R-79 SECTION 3.4.2. THE TESTING LABORATORY SHALL CERTIFY THAT THE LIGHTWEIGHT CONCRETE MEETS THE REQUIREMENTS SPECIFIED ABOVE AND SHALL SUBMIT COPIES OF THE CERTIFIED DESIGN MIX PROPORTIONS ALONG WITH ALL THE TEST RESULTS TO THE ENGINEER FOR APPROVAL, PRIOR TO LIGHTWEIGHT CONCRETE PLACEMENT.

PRIOR TO PLACEMENT OF ANY LIGHTWEIGHT CONCRETE, THE CONTRACTOR SHALL PREPARE TEST BATCHES (4 CUBIC YARDS MINIMUM) REPRESENTING THE MIX DESIGNS FOR BOTH PUMPED AND CONVENTIONALLY PLACED CONCRETE. THE CONCRETE SHALL BE PRODUCED BY THE SAME METHODS AND EQUIPMENT (READY-MIX PLANT, ETC.) THE CONTRACTOR WILL UTILIZE FOR PROJECT WORK. FIELD TESTS SHALL BE PERFORMED ON THE CONCRETE AS STIPULATED IN THE CONTRACTOR'S QUALITY CONTROL SYSTEM, DESCRIBED BELOW. THE MIX DESIGNED FOR PUMPING SHALL BE PUMPED THROUGH THE SAME EQUIPMENT WHICH THE CONTRACTOR PROPOSES TO USE FOR PLACEMENT. FIELD TESTS SHALL BE RUN AND TEST SPECIMENS PREPARED BOTH BEFORE AND AFTER PUMPING FOR COMPARISON. TEST SPECIMENS SHALL BE PREPARED FOR DETERMINATION OF 28 DAY STRENGTH AND 28 DAY AIR DRY UNIT WEIGHT OF THE TEST BATCHES. THE 28 DAY AIR DRY UNIT WEIGHT SHALL BE DETERMINED IN ACCORDANCE WITH ASTM C567. RESULTS OF THE FIELD TESTS AS WELL AS 28 DAY STRENGTH AND AIR DRY UNIT WEIGHT SHALL BE SUBMITTED TO THE ENGINEER FOR REVIEW AND APPROVAL PRIOR TO INCORPORATION OF ANY LIGHTWEIGHT CONCRETE IN THE WORK.

D. CONCRETE DELIVERY

WHEN SUPPLYING CONCRETE USING TYPE K SHRINKAGE COMPENSATING CEMENT, READY-MIX PLANTS IDENTIFIED AS "TRUCK MIX" SHALL PROPORTION THE CONCRETE SUCH THAT THE VOLUME PLACED INTO THE TRUCK IS AT LEAST 2 CUBIC YARDS LESS THAN THE RATED MAXIMUM CAPACITY OF THE MIX TRUCK. THE COST FOR COMPLYING WITH THIS REQUIREMENT SHALL BE INCLUDED IN THE APPROPRIATE CONCRETE BID ITEM.

E. QUALITY CONTROL PLAN

THE CONTRACTOR SHALL BE RESPONSIBLE FOR AND SHALL DEVELOP A QUALITY CONTROL PLAN DETAILING THE PROCESS CONTROL PROCEDURE HE PROPOSES TO FOLLOW IN ORDER TO ASSURE THAT THE CONCRETE MEETS THE REQUIREMENTS OF THIS SPECIFICATION. THIS PLAN SHALL OUTLINE THE METHODS OF TESTING THAT WILL BE EMPLOYED AND FREQUENCY OF TESTING. MINIMUM ACCEPTABLE FREQUENCY WILL BE AS DEFINED UNDER 511.04. PERSONNEL IN CHARGE OF THE CONTRACTOR'S QUALITY CONTROL PROGRAM SHALL BE DESIGNATED BY NAME, SHALL BE PROFICIENT IN LIGHTWEIGHT CONCRETE TECHNOLOGY, AND SHALL BE THOROUGHLY FAMILIAR WITH THE PERTINENT SPECIFICATIONS RELATING TO THE APPROVED MIX DESIGN, TESTING AND PRODUCTION OF LIGHTWEIGHT CONCRETE. THE PERSON IN CHARGE OF QUALITY CONTROL SHALL BE CAPABLE OF DESIGNING AND ADJUSTING LIGHTWEIGHT CONCRETE MIXTURES AND CONDUCTING TESTS ON THE PLASTIC CONCRETE AND COMPONENT MATERIALS IN ACCORDANCE WITH ACI OR ASTM STANDARDS. THIS PLAN SHALL BE SUBMITTED TO THE ENGINEER AT THE PRECONSTRUCTION CONFERENCE FOR APPROVAL.

F. QUALITY CONTROL SYSTEM

THE CONTRACTOR SHALL PROVIDE AND MAINTAIN A QUALITY CONTROL SYSTEM INCLUDING PERFORMANCE OF NECESSARY INSPECTION AND TESTING THAT WILL PROVIDE REASONABLE ASSURANCE THAT THE CONCRETE AND ITS COMPONENT MATERIALS CONFORM TO SPECIFICATION REQUIREMENTS, AS OUTLINED IN HIS QUALITY CONTROL PROGRAM. THE CONTRACTOR SHALL MAINTAIN RECORDS OF ALL INSPECTIONS AND TESTS WHICH SHALL INDICATE THE NATURE OF THE INSPECTIONS, THE AMOUNT AND TYPE OF LABORATORY AND FIELD TESTING, THE RESULTS OF THESE TESTS, AND ACTION TAKEN WHEN DEFICIENCIES WERE ENCOUNTERED OR MATERIAL WAS REJECTED. THE CONTRACTOR'S DOCUMENTATION PROCEDURES SHALL BE SUBJECT TO REVIEW AND APPROVAL BY THE ENGINEER. CERTIFIED RESULTS OF TESTS AND OTHER PERTINENT INFORMATION SHALL BE SUPPLIED TO THE ENGINEER IN A TIMELY MANNER AS THE WORK PROGRESSES. UPON COMPLETION OF THE WORK UNDER THIS ITEM, THE CONTRACTOR SHALL SUBMIT A SUMMARY INCLUDING DATES, QUANTITIES PLACED AND TEST RESULTS, IN A FORMAT ACCEPTABLE TO THE ENGINEER.

AS PART OF THE QUALITY CONTROL SYSTEM, THE CONTRACTOR SHALL HAVE A TESTING LABORATORY (CCRL) PERFORM AT LEAST ONE 28 DAY AIR DRY UNIT WEIGHT TEST FOR EVERY TWO HUNDRED (200) CUBIC YARDS, OR FRACTION THEREOF, OF CONCRETE THAT IS INCORPORATED IN THE WORK EACH DAY.

THE DEPARTMENT RESERVES THE RIGHT TO SAMPLE AND TEST THE COMPONENT MATERIALS AND PERFORM TESTS ON THE PLASTIC CONCRETE AT THE SITE, AND TO OBSERVE ANY AND ALL SAMPLING AND TESTING PERFORMED BY THE CONTRACTOR, AT THE ENGINEER'S DISCRETION. SAMPLING AND TESTING PERFORMED BY THE DEPARTMENT MAY NOT BE SUBSTITUTED FOR ITEMS TO BE PERFORMED UNDER THE CONTRACTOR'S QUALITY CONTROL PROGRAM AND SYSTEM, AND DOES NOT RELIEVE THE CONTRACTOR OF HIS RESPONSIBILITY FOR QUALITY CONTROL.

G. HANDLING OF AGGREGATES

THE HANDLING OF THE LIGHTWEIGHT COARSE AGGREGATE SHALL BE ARRANGED TO PROVIDE A THOROUGH SPRINKLING OF THE MATERIAL DURING STOCKPILING TO PRODUCE DAMP AGGREGATE. SPRINKLING SHALL BE DONE IN SUCH A WAY AS TO OBTAIN UNIFORM DISTRIBUTION OF MOISTURE. AGGREGATE SHALL BE ALLOWED TO DRAIN AS NECESSARY TO PRODUCE A UNIFORM MOISTURE CONTENT, AND SUCH MOISTURE CONTENT SHALL BE MAINTAINED INSOFAR AS PRACTICAL UNTIL THE AGGREGATE IS USED. THE TYPE B ADMIXTURE SHALL BE ADDED TO THE MIX IN STRICT ACCORDANCE WITH THE MANUFACTURER'S RECOMMENDATIONS.

THE SAME SOURCE OF AGGREGATE AND MIX DESIGN, ONCE ESTABLISHED AND CHECKED, SHALL BE USED THROUGHOUT WORK UNDER THIS ITEM. VARIATIONS THAT EXIST IN BATCHING ARRANGEMENTS, READY-MIX PLANT LAYOUTS, WEATHER AND AGGREGATE PROPERTIES MAY REQUIRE DAILY MINOR FIELD ADJUSTMENTS TO THE BATCH WEIGHTS OF THE AGGREGATE. THE CONTRACTOR SHALL PROVIDE A QUALIFIED TECHNICAL REPRESENTATIVE TRAINED BY THE AGGREGATE SUPPLIER, EXPERIENCED IN THE DESIGN AND BATCHING OF LIGHTWEIGHT CONCRETE, AT THE BATCH PLANT DURING THE PRODUCTION OF LIGHTWEIGHT CONCRETE TO INSURE CONSISTENT QUALITY CONTROL. THIS TECHNICAL REPRESENTATIVE WILL DETERMINE THE MINIMUM DOSAGE OF CHEMICAL ADMIXTURES TO BE USED BASED ON FIELD CONDITIONS ON THE DAY USED. ANY COSTS ASSOCIATED WITH PROVIDING THE TECHNICAL REPRESENTATIVE SHALL BE INCLUDED IN THE PRICE BID PER CUBIC YARD FOR THE LIGHTWEIGHT CONCRETE.

H. PLACING AND FINISHING

LIGHTWEIGHT CONCRETE SHALL BE PLACED, TESTED AND FINISHED AS SPECIFIED IN ITEM 511 EXCEPT AS NOTED HEREIN. CARE SHALL BE TAKEN TO PROVIDE UNIFORM CONSOLIDATION WITHOUT OVER-VIBRATION.

MAXIMUM AMBIENT TEMPERATURE AT THE TIME OF PLACEMENT OF CONCRETE SHALL BE 80 DEGREES F. PUMPING OF CONCRETE WILL NOT BE PERMITTED BETWEEN OCTOBER 15 AND MARCH 30.

LIGHTWEIGHT CONCRETE DECK SLABS SHALL BE FINISHED IN ACCORDANCE WITH THE REQUIREMENTS OF 451.09 AND 451.12 EXCEPT THAT CONSTRUCTION JOINTS SHALL NOT BE EDGED.

I. COLD WEATHER CONCRETING
THE REQUIREMENTS OF 511.12 SHALL BE MODIFIED AS FOLLOWS:

THE CONCRETE MUST BE PROTECTED FROM FREEZING UNTIL A MINIMUM STRENGTH OF 4,000 PSI IS ATTAINED. IF THE CONTRACTOR PROPOSES CONCRETE PLACEMENT DURING COLD WEATHER THE CONTRACTOR IS RESPONSIBLE FOR THE MAKING AND TESTING OF CYLINDERS TO ENSURE THAT THIS REQUIREMENT IS MET, AT NO ADDITIONAL COST TO THE PROJECT.

J. CURING

IMMEDIATELY AFTER THE DECK SLAB HAS BEEN SCREEDED, AN APPROVED MONOMOLECULAR FILM OR A FOG SPRAY OF WATER SHALL BE APPLIED TO THE CONCRETE SURFACE.

MONOMOLECULAR FILM - THE FILM MATERIAL SHALL BE MASTER BUILDERS - CONFILM; EUCLID CHEMICAL COMPANY - EUCOBAR; CHEM MASTERS - MONOLUX; OR APPROVED EQUAL. IT SHALL BE APPLIED IN ACCORDANCE WITH THE MANUFACTURER'S PRINTED INSTRUCTIONS. IF THE FILM IS BROKEN, AS BY TEXTURING OF THE SURFACE, OR THE FILM EVAPORATES PRIOR TO PLACEMENT OF THE WET BURLAP, THE FILM SHALL BE REAPPLIED.

FOG SPRAY OF WATER - DECKS AND SLABS SHALL BE GIVEN A FOG SPRAY OF WATER; FOGGING SHALL CONTINUE UNTIL THE WET BURLAP IS PLACED. FOG MISTING IS TO KEEP THE ENVIRONMENT SURROUNDING THE CONCRETE HUMID TO PREVENT EVAPORATION FROM THE SURFACE OF THE UNHARDENED CONCRETE. FOG MISTING SHALL NOT BE USED TO APPLY WATER TO THE SURFACE OF THE CONCRETE TO PROVIDE ADDITIONAL LUBRICATION FOR FINISHING PURPOSES. FOGGING EQUIPMENT SHALL HAVE WATER PRESSURE SYSTEMS RATED AT 2,400 PSI OR GREATER AND DISCHARGE APPROXIMATELY 2 TO 3 GALLONS PER MINUTE. WIDE ANGLE AND SHARP ANGLE NOZZLES SHALL BE USED FOR LOW WIND AND WINDY CONDITIONS, RESPECTIVELY.

CURING SHALL BE IN ACCORDANCE WITH 511.14 METHOD (A) WATER CURING USING CONTINUOUS SPRINKLING, AND NO METHOD WHICH RETARDS EVAPORATION FROM THE BURLAP WILL BE ALLOWED. THE PROVISIONS OF SUPPLEMENTAL SPECIFICATION 836 SHALL NOT BE USED UNDER THIS ITEM OF WORK. (IF 511.12 APPLIES AT THE TIME OF PLACEMENT, METHODS WHICH RETARD EVAPORATION FROM THE BURLAP SHALL BE PERMITTED.) PROVISIONS FOR A CONTINUOUS SUPPLY OF CURING WATER SHALL BE ON SITE AND OPERABLE BEFORE A PLACEMENT WILL BE PERMITTED TO START, AND WILL REMAIN IN PLACE THROUGHOUT THE CURING PERIOD. THEY SHALL BE REPLENISHED, AS REQUIRED, WITH A SHUTTLE TANKER OR A LOCAL WATER SOURCE SUCH AS A FIRE HYDRANT. CARE SHALL BE TAKEN TO AVOID THERMAL SHOCK OR EXCESSIVELY STEEP THERMAL GRADIENTS DUE TO THE USE OF COLD CURING WATER.

COUNTY BRIDGE NO. 84

HOWARD NEEDLES TAMMEN & BERGENDOFF
ARCHITECTS ENGINEERS PLANNERS
HNTB

GENERAL NOTES
BR. NO. CUY - 6 - 1499
REHABILITATION OF
VETERANS MEMORIAL BRIDGE
(U.S. 6, 20, 42 & S.R. 3 OVER CUYAHOGA RIVER)
CLEVELAND CUYAHOGA COUNTY OHIO

DRAWN	TRACED	CHECKED	REVIEWED	REVISED
B.E.B.	B.F.	A.D.Y.	C.A.B.	
DATE 3/22/94	DATE 3/28/94	DATE 3/30/94	DATE 3/31/94	SHEET 10 /270

GENERAL NOTES – STRUCTURES OVER 20-FT SPAN

FHWA REGION	STATE	PROJECT	
5	OHIO		

142/412

CUYAHOGA COUNTY
CUY – 6 – 14.99

CURING WATER SHOULD NOT BE MORE THAN 20 DEGREES F COOLER THAN THE CONCRETE TO AVOID SURFACE TEMPERATURE STRESSES WHICH COULD CAUSE CRACKING.

K. LOADING OF STRUCTURE

TO PERMIT EARLY REMOVAL OF FALSEWORK AND/OR OPENING TO CONSTRUCTION TRAFFIC OF SIX (6) TONS OR LESS, THE REQUIREMENTS OF 511.14 SHALL APPLY. TO PERMIT OPENING TO CONSTRUCTION TRAFFIC OF MORE THAN SIX (6) TONS, IN ADDITION TO THE REQUIREMENTS OF 511.14, THE AVERAGE STRENGTH OF THREE (3) TEST CYLINDERS SHALL BE 3,500 PSI MINIMUM.

THE TESTING REQUIRED ABOVE SHALL BE PERFORMED AS PART OF THE CONTRACTOR'S QUALITY CONTROL SYSTEM. THE THREE (3) TEST CYLINDERS SHALL BE IN ADDITION TO THOSE PREPARED AS PART OF THE NORMAL QUALITY CONTROL. CYLINDER TESTS SHALL BE PERFORMED PER ASTM. BEAM TESTS SHALL BE PERFORMED ACCORDING TO STANDARD METHODS ON FILE IN THE OFFICE OF THE DIRECTOR. CERTIFIED TEST RESULTS SHALL BE FURNISHED TO THE ENGINEER FOR APPROVAL BEFORE ANY SECTION OF DECK IS OPENED TO TRAFFIC.

L. METHOD OF MEASUREMENT

THE QUANTITY SHALL BE MEASURED AS PER 511 AND SHALL INCLUDE ALL LABOR, MATERIALS, EQUIPMENT AND INCIDENTALS NECESSARY TO COMPLETE THIS ITEM OF WORK.

M. BASIS OF PAYMENT

THE PAYMENT WILL BE MADE AT THE CONTRACT UNIT PRICE BID FOR THE FOLLOWING:

ITEM	UNIT	DESCRIPTION
SPECIAL	CU. YD.	CLASS S LIGHTWEIGHT CONCRETE, SUPERSTRUCTURE, USING SHRINKAGE COMPENSATING CEMENT
SPECIAL	LUMP	CLASS S LIGHTWEIGHT CONCRETE, SUPERSTRUCTURE, USING SHRINKAGE COMPENSATING CEMENT FOR PRE-PLACEMENT TESTING.

38. ITEM SPECIAL - COLUMN BASE REPAIRS

A. DESCRIPTION

THIS WORK SHALL INCLUDE THE COMPLETE REMOVAL AND REPLACEMENT OF DESIGNATED PORTIONS OF COLUMN BASES IN THE WEST APPROACH TUNNELS AND STATION TO THE LIMITS SHOWN ON THE PLANS OR TO THE LIMITS DIRECTED BY THE ENGINEER.

B. REQUIREMENTS

TEMPORARY SHORING SHALL BE DESIGNED AND FURNISHED BY THE CONTRACTOR TO SUPPORT THE TUNNEL ROOF SLAB, INCLUDING LIVE LOAD AS APPLICABLE, DURING REPAIR OPERATIONS. THE SHORING DESIGN SHALL BE SEALED BY A REGISTERED PROFESSIONAL ENGINEER AND SUBMITTED TO THE DIRECTOR FOR APPROVAL.

REMOVAL SHALL BE IN ACCORDANCE WITH APPLICABLE PROVISIONS OF ITEM 202 PORTIONS OF STRUCTURES REMOVED, AS PER PLAN, BUT INCLUDED WITH ITEM SPECIAL, COLUMN BASE REPAIRS, FOR PAYMENT. CONCRETE SHALL BE CLASS C IN ACCORDANCE WITH ITEM 511, USING NO. 8 SIZE COARSE AGGREGATE.

THE INTERFACE OF THE NEW COLUMN BASE AND THE EXISTING COLUMN SHALL BE FILLED WITH A NON-SHRINK GROUT. THE GROUT SHALL HAVE MINIMUM COMPRESSIVE STRENGTH OF 5,000 PSI AT 28 DAYS AND MEET THE REQUIREMENTS OF ASTM 1107, GRADE C.

C. METHOD OF MEASUREMENT:

THE QUANTITY WILL BE MEASURED AS THE ACTUAL NUMBER OF COLUMN BASES REPAIRED AS SPECIFIED. THE QUANTITY SO MEASURED SHALL INCLUDE ALL LABOR, MATERIALS, EQUIPMENT AND INCIDENTALS NECESSARY TO SATISFACTORILY PERFORM THE WORK OF THIS ITEM.

D. BASIS OF PAYMENT:

THE PAYMENT WILL BE MADE AT THE CONTRACT UNIT PRICE BID FOR:

ITEM	UNIT	DESCRIPTION
SPECIAL	EACH	COLUMN BASE REPAIRS

ANY ADDITIONAL COLUMN BASES DETERMINED BY THE ENGINEER TO BE EXCESSIVELY DETERIORATED SHALL BE REPAIRED. AN ALLOWANCE OF TEN (10) EA. IS INCLUDED WITH ITEM SPECIAL, COLUMN BASE REPAIRS FOR THIS PURPOSE LISTED IN THE "GENERAL" COLUMN OF THE ESTIMATED QUANTITIES TABLE.

39. ITEM SPECIAL - PATCHING CONCRETE STRUCTURES

A. DESCRIPTION

THIS ITEM CONSISTS OF THE REMOVAL OF ALL LOOSE AND DETERIORATED CONCRETE, SURFACE PREPARATION AND THE MIXING, PLACING, FINISHING AND CURING OF THE PATCHES AS SPECIFIED HEREIN OR AS DIRECTED BY THE ENGINEER. THE PATCHING SHALL BE PERFORMED ON ALL STRUCTURAL MEMBERS AND WALLS SCHEDULED TO REMAIN, AS DIRECTED BY THE ENGINEER, EXCLUSIVE OF MEMBERS SPECIFICALLY COVERED ELSEWHERE. THE WORK SHALL BE PERFORMED IN ACCORDANCE WITH THE MANUFACTURER'S SPECIFICATIONS AND RECOMMENDATIONS FOR THE MATERIAL BEING USED.

B. REQUIREMENTS

THE EDGES OF ALL PATCHES SHALL BE SAW CUT 1" DEEP OR TO THE DEPTH OF THE EXISTING REINFORCING STEEL, WHICHEVER IS LESS. THE MEMBERS SHALL BE PATCHED USING ONE OF THE FOLLOWING METHODS, BASED ON THE REQUIRED DEPTH OF PATCH AND THE APPROVAL OF THE ENGINEER:

1. TROWELABLE MORTAR (PATCHES ≤ 1-1/2" IN DEPTH)

2. CONCRETE (PATCHES ≥ 4" IN DEPTH)

3. SHOTCRETING CONCRETE STRUCTURES (PATCHES 1" ≤ DEPTH ≤ 6"IN DEPTH)

C. TROWELABLE MORTAR

MATERIALS

THE PATCHING MATERIAL SHALL BE:

SIKATOP PLUS 122 AND 123
THERMAL-CHEM PRODUCT NO. 3
POLYCARB MARK 193.4 AND 194
FIVE STAR HIGHWAY PATCH
UPCO BOSTICK 964
EUCLID CHEMICAL EUCO VERTICOAT
MASTER BUILDERS EMACO
DURALTOP AND DURALPATCH GEL
SPECRETE - IP MICROPATCH 850

THE MATERIALS SHALL BE TINTED TO CURE TO THE COLOR OF THE EXISTING CONCRETE. ALL MATERIALS SHALL BE STORED AND INCORPORATED IN THE WORK AS RECOMMENDED BY THE MANUFACTURER. A MANUFACTURER'S REPRESENTATIVE SHALL BE PRESENT AT THE JOB SITE UNTIL SUCH TIME AS HE AND THE ENGINEER ARE SURE THAT THE CONTRACTOR IS QUALIFIED IN ALL ASPECTS OF PATCHING CONCRETE STRUCTURES WITH THE SELECTED MATERIAL.

REMOVAL OF CONCRETE

ALL LOOSE, SOFT, HONEYCOMBED, AND DISINTEGRATED CONCRETE, PLUS ONE-FOURTH OF AN INCH DEPTH OF SOUND CONCRETE SHALL BE REMOVED. WHERE THE BOND BETWEEN THE CONCRETE AND A REINFORCING BAR HAS BEEN DESTROYED, OR WHERE MORE THAN ONE-HALF OF THE PERIPHERY OF SUCH A BAR HAS BEEN EXPOSED, THE ADJACENT CONCRETE SHALL BE REMOVED TO A DEPTH THAT WILL PROVIDE A MINIMUM ONE-HALF OF AN INCH CLEARANCE AROUND THE BAR EXCEPT WHERE OTHER REINFORCING BARS MAKE THIS IMPRACTICAL. AFTER COMPLETION OF THE REMOVAL OPERATION, THE CONTRACTOR SHALL PROVIDE ACCESS AND THE ENGINEER WILL RESOUND THE AREAS TO ENSURE THAT ONLY SOLID CONCRETE REMAINS. ALL WORK SHALL BE DONE IN A MANNER THAT WILL NOT DAMAGE OR SHATTER THE CONCRETE THAT IS TO REMAIN, AND WILL NOT CUT, ELONGATE OR DAMAGE THE REINFORCING STEEL IN ANY WAY. CONCRETE MAY BE REMOVED BY CHIPPING OR HAND DRESSING. CHIPPING HAMMERS SHALL NOT BE HEAVIER THAN THE NOMINAL 35-POUND CLASS. WHERE EXISTING REINFORCING BARS WOULD BE LESS THAN ONE INCH FROM THE PROPOSED FINISHED SURFACE OF CONCRETE, THEY SHALL, IF PRACTICAL, BE DRIVEN BACK INTO RECESSES CUT IN THE MASONRY TO OBTAIN THAT COVERAGE UNLESS OTHERWISE APPROVED BY THE ENGINEER.

SURFACE PREPARATION

CLEANING SHALL PRECEDE APPLICATION OF THE PATCHING MATERIAL BY NOT MORE THAN 24 HOURS. THE SURFACE TO BE PATCHED AND THE EXPOSED REINFORCING STEEL SHALL BE THOROUGHLY CLEANED BY ABRASIVE BLASTING FOLLOWED BY AN AIR BLAST. THE USE OF SILICA SAND IS NOT PERMITTED. IT MAY BE NECESSARY TO USE HAND TOOLS TO REMOVE SCALE FROM THE REINFORCING STEEL. THE SURFACE SHALL BE MADE FREE OF SPALLS, LAITANCE AND ALL TRACES OF FOREIGN MATERIAL. IF NECESSARY, DETERGENT CLEANING SHALL PRECEDE BLAST CLEANING TO ENSURE THE REMOVAL OF CONTAMINANTS THAT ARE DETRIMENTAL TO ACHIEVING AN ADEQUATE BOND. THE PREPARED SURFACE SHALL BE LEFT IN CONDITION AS RECOMMENDED BY THE MANUFACTURER. ANY ADDITIONAL SURFACE PREPARATION SHALL BE IN ACCORDANCE WITH THE MANUFACTURER'S RECOMMENDATIONS FOR THE PATCHING MATERIAL WHICH IS USED. ALL UNCHIPPED SURFACES THAT WILL RECEIVE NEW MATERIAL SHALL BE MECHANICALLY ROUGHENED.

PATCHING

THE MIXING, PROPORTIONING, PLACING AND CURING PROCEDURES AND TOOLS, EQUIPMENT, LABOR AND MATERIALS USED SHALL BE IN ACCORDANCE WITH THE MANUFACTURER'S SPECIFICATIONS AND RECOMMENDATIONS. THE SURFACE OF THE REPAIR AREA SHALL BE FLUSH WITH THE SURROUNDING AREA.

CURING

PATCHES SHALL BE CURED IN ACCORDANCE WITH THE MANUFACTURER'S RECOMMENDATIONS.

D. CONCRETE PATCHING

THIS WORK SHALL BE IN ACCORDANCE WITH ALL PROVISIONS OF ITEM 519, EXCEPT AS MODIFIED HEREIN. COARSE AGGREGATE SHALL MEET THE REQUIREMENTS OF 703.02 AND SHALL BE NO. 8 SIZE. WHERE MINIMUM REINFORCEMENT IS REQUIRED FOR TEMPERATURE AS DETERMINED BY THE ENGINEER #4 BARS AT 12" CENTERS IN BOTH DIRECTIONS SHALL BE PROVIDED BY THE CONTRACTOR AND PAID FOR UNDER ITEM 509. AFTER COMPLETION OF THE REMOVAL OPERATION, THE CONTRACTOR SHALL PROVIDE ACCESS AND THE ENGINEER WILL RESOUND THE AREAS TO ENSURE THAT ONLY SOLID CONCRETE REMAINS. THE CONTRACTOR SHALL FURNISH AND INSTALL DOWELS OR EXPANSION BOLTS AT A DISTANCE NOT TO EXCEED 18-INCH CENTERS IN BOTH DIRECTIONS TO ANCHOR THE REINFORCEMENT. COST OF INSTALLING THE DOWELS OR EXPANSION BOLTS SHALL BE INCLUDED WITH ITEM SPECIAL, PATCHING CONCRETE STRUCTURES.

REVISED D-12 8/29/94

COUNTY BRIDGE NO. 84

HOWARD NEEDLES TAMMEN & BERGENDOFF
ARCHITECTS ENGINEERS PLANNERS
HNTB

GENERAL NOTES
BR. NO. CUY – 6 – 1499
REHABILITATION OF
VETERANS MEMORIAL BRIDGE
(U.S. 6, 20, 42 & S.R. 3 OVER CUYAHOGA RIVER)
CLEVELAND CUYAHOGA COUNTY OHIO

DRAWN	TRACED	CHECKED	REVIEWED	REVISED
B.E.B.	B.F.	A.D.Y.	C.A.B.	
DATE 3/22/94	DATE 3/28/94	DATE 3/30/94	DATE 3/31/94	SHEET 11 /270

GENERAL NOTES - STRUCTURES OVER 20 FT SPAN

E. SHOTCRETING CONCRETE STRUCTURES

All of the provisions of Item 520 of the Construction and Material Specifications shall apply, except as modified herein.

Description:
This item applies to the surface repair of concrete structures using shotcrete applied (pneumatically placed) mortar and includes the removal of concrete, concrete surface preparation, the furnishing and placing of reinforcing steel including wire fabric, dowels, and/or expansion anchor bolts when required, and the preparing and applying of the mortar In the areas shown or noted on the plans or when directed by the Engineer. The thickness of the mortar shall not be less than 1/4 inch.

Surface Preparation:
All surfaces to which the mortar is to bond, including exposed reinforcing steel and the work face of any previously placed mortar, shall be cleaned by abrasive blasting or ultra high pressure water blasting not more than 24 hours prior to the placement of the mortar. Blasting abrasives containing more than 1% free silica will not be allowed. These surfaces shall be made free of spalls, laitance, and all contaminants detrimental to the achievement of an adequate bond. Ultra high hydro-demolition, with capability of 20,000 psi is an acceptable method of total surface preparation.

Materials:
The requirements for 520.06 and 520.08 shall be void. Mortar utilized must meet the following criteria:

A. If the mortar is a pre-packaged, branded entity, preparation in either the wet or dry process shall conform to manufacturers recommendations.

B. If the mix used employs materials batched at the jobsite, batched by the shotcreting contractor himself prior to use on the jobsite, or supplied In a ready mix truck, the ingredients of these mixes must be readily documentable, in both quality and quantity. This applies to both qualification testing prior to jobsite application and for jobsite application.

Shotcrete mortar will meet the following test requirements:

Compressive Strength: (ASTM C-109, 3-inch cubes)

1 DAY.....1800 psi

7 DAY.....5500 psi

28 DAY..... 7500 psi

Flexural Strength: (ASTM C-78)

7 DAY.....1100 psi

28 DAY.....1500 psi

Tensile Strength: (ASTM C-496)

1 DAY..... 550 psi

28 DAY..... 750 psi

Modulus of
Elasticity.....3,400,000 PSI

Bond Strength (ASTM C882 Modified*) ....1700 PSI
* - mortar scrubbed In substrate

Chloride Ion Permeability (AASHTO T-277)
..... 350 coulombs or less.

The mortar may contain microsilica, polymers, water reducing agents or other additives in any combination that will produce the required performance.

Reinforcement:
Wire fabric reinforcement shall not be required except when directed by the Engineer.

All reinforcing bar that is exposed must be thoroughly cleaned.

Placing:
The mortar shall be pneumatically placed.

When wet mix shotcreting is employed, the nozzle operator must be able to demonstrate experience and capability in the shotcrete application process.

When dry mix shotcreting is employed, the nozzle operator must be qualified according to the guidelines presented in ACI 506 R 85.

If the flow of material at the nozzle is not uniform, resulting in slugs, pockets, or sloughing of the shotcrete, the nozzle operator shall direct the nozzle away from the repair area until the faulty conditions are corrected. Such defects shall be replaced as the work progresses.

Shotcreting shall be temporarily suspended if rain occurs which may cause washouts or sloughing of the repair surface. Mortar shall be placed only when the ambient temparature is at least 40 degrees and rising and the temperature of the structure to be repaired is at least 50 degrees.

The contractor shall cool the ingredients or take other appropriate measures when premature stiffening of the mortar occurs in warm weather.

The mortar shall be pneumatically placed continuously on vertical and over head surfaces unless otherwise directed by the engineer.

Preconstruction Testing:
An Investigation shall be made prior to the start of the work to check the operation of the equipment, the qualifications of the application crews, and to ensure that a satisfactory quality of pneumatically placed mortar can be produced.

STATE OF OHIO
DEPARTMENT OF TRANSPORTATION
DISTRICT 12 BRIDGE DEPARTMENT

GENERAL NOTES
BRIDGE NO. CUY-6-1499
REHABILITATION OF VETERANS MEMORIAL BRIDGE
(U.S. 6,20,42 & S.R. 3 OVER CUYAHOGA RIVER)

CLEVELAND CUYAHOGA COUNTY OHIO

DESIGNED	DRAWN	CHECKED	REVIEWED	REVISED
GLC	JJM	BGW	DWL DATE 8/29/94	

SHEET 12 /270

PLOTTED BY:bridges
PLOTTED FROM:c:\bridges\cox\bgenote20.dg
filename.dgn
PLOT SUBMITTED:30-AUG-1994 10:47

GENERAL NOTES - STRUCTURES OVER 20 FT SPAN

Test panels shall be fabricated by shooting mortar onto the plywood bottom of an open box 18 inches square and 4 inches deep. Reinforcement in the larger sizes and tighter spacing found in a bridge shall be incorporated in test panels which are 24 inches square. The boxes shall be mounted vertically or horizontally to simulate the actual job condition. The mortar shall be applied using the personnel, equipment, and procedures proposed for the job until the box is full. The mixing water shall be adjusted to provide mortar of the proper consistency as recommended by the manufacturer. The quantity of mixing water introduced into the mix shall be measureable and shall be documented during any shotcrete application procedure.

Three cores shall be taken from each panel and tested according to ASTM C 42 by an independent testing laboratory approved by the State. A compressive strength of at least 7500 psi at 28 days will be required. In order to preclude a possible delay in starting the work, 5500 psi at 7 days will be accepted.

The panels shall also be broken so that the interior portions can be carefully examined. They shall be substantially free of hollow areas and sand pockets and the mortar shall be well bonded to the reinforcement.

Each crew must fabricate satisfactory panels simulating the actual on site conditions (e.g. vertical or overhead application) before applying the mortar to the structure.

Inspection and Testing:
All patched areas shall be sounded after curing and before final acceptance. All unsound areas and areas exhibiting cracking shall be removed and repatched.

The acceptance of the pneumatically placed mortar will also be based on cores taken from patched areas and tested according to ASTM C 42 in addition to the required sounding of all patches. The location of the cores will be determined by the engineer. One core will be taken for each 200 sq. ft. of pneumatically placed mortar. The cores shall extend completely through the patched area and into the underlying sound concrete at least two inches. The cores will be visually inspected at the site by the engineer for hollow areas, sand pockets, voids around the reinforcing steel and lack of bond to the underlying concrete.

The average 28-day compressive strength of the cores as detemined by an independent laboratory shall be not less than 6500 psi and no core shall test lower than 5500 psi.

All patches determined to be defective by sounding, visible cracks or unacceptable cores shall be removed, replaced and cored. Patch replacement will continue until only acceptable patches remain. Core holes shall be surface prepped as described above and filled by hand packing with a mortar equivalent in ingredients to that employed in the original process.

All test panel, coring, repair of core holes, independent laboratory testing of the cores, and replacement of the rejected areas will be the responsibility of the Contractor and included in the unit bid price for this item.

F. INSPECTION AND SOUNDING OF CONCRETE PATCHED

AFTER CURING AND BEFORE FINAL ACCEPTANCE, ALL PATCHED AREAS SHALL BE SOUNDED BY THE ENGINEER. THE CONTRACTOR SHALL FURNISH ACCESS FOR THE ENGINEER TO PERFORM THIS SOUNDING. ALL UNSOUND AREAS AND AREAS EXHIBITING CRACKING SHALL BE REMOVED AND REPATCHED ACCORDING TO THIS SPECIFICATION. ALL ACCESS FOR SOUNDING, AND REPLACEMENT OF REJECTED AREAS WILL BE THE RESPONSIBILITY OF THE CONTRACTOR AND INCLUDED IN THE UNIT BID PRICE FOR THIS ITEM.

G. METHOD OF MEASUREMENT

THE QUANTITY SHALL BE THE ACTUAL AREA IN SQUARE FEET OF THE EXPOSED SURFACES OF ALL COMPLETED PATCHES IRRESPECTIVE OF THE DEPTH OR THICKNESS OF THE PATCH, COMPLETE, IN PLACE AND ACCEPTED. IF THE PATCH INCLUDES CORNERS OR EDGES OF MEMBERS, ALL OF THE EXPOSED SURFACES SHALL BE INCLUDED, EXCEPT AS NOTED HEREIN. IF THE REPAIR EXTENDS COMPLETELY THROUGH A MEMBER AND EXTENDS OVER MORE THAN TWO FACES OF A MEMBER, THE REPAIR SHALL NOT BE PAID FOR UNDER THIS ITEM, BUT SHALL BE PAID FOR ON A CUBIC YARD BASIS WITH THE APPROPRIATE CONCRETE ITEM. THE QUANTITY SO MEASURED SHALL INCLUDE ALL LABOR, MATERIALS, EQUIPMENT AND INCIDENTALS NECESSARY TO SATISFACTORILY COMPLETE THIS WORK.

PLOTTED BY:bridges
PLOTTED FROM:c:\bridges\bridges\bcox\bgenote20.dgn
filename.dgn
PLOT SUBMITTED:30-AUG-1994 10:46

GENERAL NOTES - STRUCTURES OVER 20-FT SPAN

FHWA REGION	STATE	PROJECT	
5	OHIO		

144/412

CUYAHOGA COUNTY
CUY - 6 - 14.99

H. BASIS OF PAYMENT:

THE PAYMENT WILL BE MADE AT THE CONTRACT UNIT PRICE BID FOR:

ITEM	UNIT	DESCRIPTION
SPECIAL	SQ. FT.	PATCHING CONCRETE STRUCTURES

A CONTINGENCY QUANTITY OF 8,000 SQ. FT. IS INCLUDED WITH ITEM SPECIAL, PATCHING CONCRETE STRUCTURES, TO BE USED AS DIRECTED BY THE ENGINEER. THIS QUANTITY IS LISTED IN THE "GENERAL" COLUMN OF THE ESTIMATED QUANTITIES TABLE.

40. ITEM SPECIAL - REPAIR STRUCTURAL STEEL MEMBERS ENCASED IN CONCRETE.

A. DESCRIPTION

THIS WORK SHALL INCLUDE REMOVING DETERIORATED CONCRETE ENCASEMENT FROM STRUCTURAL STEEL MEMBERS TO THE LIMITS SHOWN IN THE PLANS OR AS DIRECTED BY THE ENGINEER, CLEANING THE STEEL MEMBERS AND REENCASING THE MEMBERS WITH CONCRETE.

B. REQUIREMENTS

STRUCTURAL STEEL MEMBERS ENCASED IN CONCRETE INCLUDE THE FOLLOWING:

1. COLUMNS SUPPORTING CENTER UPPER DECK FLOORBEAMS AT PIERS 3 AND 4.

2. SPAN 12 LOWER DECK FLOOR SYSTEM, ARCH RIBS AND COLUMNS SUSPENDED FROM ARCH RIBS.

ALL DETERIORATED CONCRETE SHALL BE REMOVED IN ACCORDANCE WITH APPLICABLE PROVISIONS OF ITEM 202, PORTIONS OF STRUCTURES REMOVED, AS PER PLAN, AND INCLUDED WITH ITEM SPECIAL, REPAIR STRUCTURAL STEEL MEMBERS ENCASED IN CONCRETE, FOR PAYMENT. THE CONTRACTOR SHALL USE CAUTION NOT TO DAMAGE THE STEEL MEMBERS WHILE REMOVING THE CONCRETE. THE STEEL MEMBERS SHALL BE ABRASIVELY CLEANED OF ALL CONCRETE FRAGMENTS, RUST, ETC. SHEAR STUDS SHALL BE WELDED TO THE MEMBERS IF SPECIFIED AND SHALL BE INCLUDED WITH ITEM 513 FOR PAYMENT. THE MEMBERS SHALL BE GIVEN A LIGHT MIST COAT OF INORGANIC ZINC PRIMER. REINFORCING STEEL SHALL BE INCLUDED WITH ITEM 509 FOR PAYMENT. THE MEMBERS SHALL BE REENCASED WITH CLASS C CONCRETE USING NO. 8 SIZE COARSE AGGREGATE, AS SOON AS PRACTICAL FOLLOWING CLEANING AND COATING OF THE MEMBERS. IF, IN THE OPINION OF THE ENGINEER, A MEMBER HAS EXCESSIVE RUST, THE MEMBER SHALL BE RECLEANED, AT THE CONTRACTOR'S EXPENSE.

C. METHOD OF MEASUREMENT

THE QUANTITY SHALL BE THE ACTUAL AREA IN SQUARE FEET OF THE EXPOSED SURFACE OF ALL COMPLETED REPAIRS, IRRESPECTIVE OF DEPTH OF THICKNESS OF THE REPAIR COMPLETE, IN PLACE, AND ACCEPTED. IF THE REPAIR INCLUDES CORNERS OR EDGES OF MEMBERS, ALL OF THE EXPOSED SURFACES SHALL BE INCLUDED. THE QUANTITY SO MEASURED SHALL INCLUDE ALL LABOR, MATERIALS, EQUIPMENT AND INCIDENTALS NECESSARY TO SATISFACTORILY PERFORM THIS WORK.

D. BASIS OF PAYMENT

THE PAYMENT WILL BE MADE AT THE CONTRACT UNIT PRICE BID FOR:

ITEM	UNIT	DESCRIPTION
SPECIAL	SQ FT	REPAIR STRUCTURAL STEEL MEMBERS ENCASED IN CONCRETE

ANY ADDITIONAL AREAS OF MEMBERS REQUIRING REPAIR IN EXCESS OF THE QUANTITIES SHOWN IN THE PLANS SHALL BE REPAIRED AS DIRECTED BY THE ENGINEER. AN ALLOWANCE OF 1000 SQ. FT. IS INCLUDED WITH ITEM SPECIAL, REPAIR STRUCTURAL STEEL MEMBERS ENCASED IN CONCRETE, FOR THIS PURPOSE, LISTED IN THE "GENERAL" COLUMN OF THE ESTIMATED QUANTITIES TABLE.

41. ITEM SPECIAL - REPAIRING CONCRETE STRUCTURES WITH SOLVENT FREE EPOXY RESIN

A. DESCRIPTION

THIS ITEM SHALL CONSIST OF SURFACE PREPARATION AND THE MIXING AND APPLICATION OF AN EPOXY RESIN COATING, AT LOCATIONS AS DIRECTED BY THE ENGINEER. ALL WORK SHALL BE IN ACCORDANCE WITH THESE SPECIFICATIONS, IN REASONABLY CLOSE CONFORMITY WITH THE PLANS AND THE MANUFACTURER'S SPECIFICATIONS AND RECOMMENDATIONS.

B. THE MATERIAL SHALL BE A TWO-PART, SOLVENT FREE, EPOXY RESIN COATING. THE MATERIAL SHALL BE SIKAGARD 62; EUCLID CHEMICAL EPOXY 452LV; POLY-CARB MARK-65; THERMAL-CHEM PRODUCT NO. 901 OR DURALKOTE. THE CONTRACTOR SHALL ENSURE THAT THE EPOXY RESIN IS CHEMICALLY COMPATIBLE WITH THE EPOXY SEALER (REFER TO GENERAL NOTE 42) TO BE APPLIED TO THE STRUCTURE, AND THAT THE COLOR OF THE RESIN WILL NOT SHOW THROUGH THE EPOXY SEALER.

C. SURFACE PREPARATION

ALL LOOSE AND DISINTEGRATED CONCRETE SHALL BE REMOVED FROM THE AREAS TO BE REPAIRED IN SUCH A MANNER AND TO SUCH AN EXTENT AS TO EXPOSE A SOLID CONCRETE SURFACE. THE ENGINEER WILL SOUND THE AREAS TO ENSURE THAT ONLY SOLID CONCRETE REMAINS. THE CONTRACTOR SHALL LEAVE LADDERS, PLATFORMS OR SCAFFOLDS IN PLACE FOR A SUFFICIENT LENGTH OF TIME AND IN SUCH A MANNER TO PERMIT THE ENGINEER TO SOUND THE CONCRETE.

CONCRETE MAY BE REMOVED BY CHIPPING OR HAND DRESSING,. CHIPPING HAMMERS SHALL NOT BE HEAVIER THAN THE NOMINAL 10-POUND CLASS. CARE SHALL BE USED IN WORKING NEAR REINFORCING STEEL SO AS NOT TO DAMAGE OR DEBOND THE STEEL, OR TO SHATTER THE CONCRETE AROUND IT. WHEN REMOVAL BECOMES EXTENSIVE, THE ENGINEER MAY REQUIRE AN AREA TO BE REPAIRED AND PAID FOR UNDER ITEM SPECIAL - PATCHING CONCRETE STRUCTURES.

THE SURFACE TO BE COATED AND ANY EXPOSED REINFORCING STEEL SHALL BE THOROUGHLY CLEANED BY ABRASIVE BLASTING FOLLOWED BY AN AIR BLAST. THE USE OF SILICA SAND WILL NOT BE PERMITTED. IT MAY BE NECESSARY TO USE HAND TOOLS TO REMOVE SCALE FROM THE REINFORCING STEEL. SURFACES SHALL BE MADE FREE OF SPALL, LAITANCE AND ALL TRACES OF FOREIGN MATERIALS. CLEANING SHALL PRECEDE APPLICATION OF THE COATING BY NOT MORE THAN 24 HOURS.

D. APPLICATION

THE EPOXY SHALL BE APPLIED TO THE CONCRETE SURFACES UNDER CONDITIONS AND IN THE MANNER SPECIFIED BY THE ENGINEER. TWO COATS SHALL BE APPLIED AT A MAXIMUM COVERAGE RATE OF 150 SQUARE FEET PER GALLON FOR EACH COAT. THE FIRST COAT SHALL BE TINTED TO APPEAR DIFFERENT IN COLOR THAN THE SECOND COAT.

E. METHOD OF MEASUREMENT

THE QUANTITY WILL BE MEASURED AS THE ACTUAL SQUARE FEET OF SURFACE REPAIRED AS SPECIFIED. THE QUANTITY SO MEASURED SHALL INCLUDE ALL LABOR, MATERIALS, EQUIPMENT AND INCIDENTALS NECESSARY TO SATISFACTORILY PERFORM THE WORK OF THIS ITEM.

F. BASIS OF PAYMENT

THE PAYMENT WILL BE MADE AT THE CONTRACT UNIT PRICE BID FOR:

ITEM	UNIT	DESCRIPTION
SPECIAL	SQ. FT.	REPAIRING CONCRETE STRUCTURES WITH SOLVENT FREE EPOXY RESIN.

A CONTINGENCY QUANTITY OF 2,000 SQ. FT. IS INCLUDED WITH ITEM SPECIAL, REPAIRING CONCRETE STRUCTURES WITH SOLVENT FREE EPOXY RESIN, TO BE USED AS DIRECTED BY THE ENGINEER. THIS QUANTITY IS LISTED IN THE "GENERAL" COLUMN OF THE ESTIMATED QUANTITIES TABLE.

42. ITEM SPECIAL - SEALING OF CONCRETE SURFACES, WATERPROOFING MISC.: MODIFIED, EPOXY-URETHANE

A. EPOXY-URETHANE SEALER

AN EPOXY-URETHANE SEALER MEETING THE REQUIREMENTS OF THE PROPOSAL NOTE SHALL BE APPLIED TO THE FOLLOWING EXPOSED CONCRETE SURFACES OR AS DIRECTED BY THE ENGINEER:

1. ENTIRE SURFACES OF PIERS 1, 2, AND 5 THRU 10 ABOVE GROUND LINE EXCEPT THE TOPS OF THE LOWER PIER WALLS BENEATH THE LOWER DECK.

2. PORTIONS OF PIERS 3, 4, 11 AND 12 AS SHOWN ON SHEET 223/270.

3. ENTIRE UPPER ABUTMENT SHAFTS ABOVE LOWER DECK AT WEST AND EAST ABUTMENTS. REMAINDER OF OUTSIDE SURFACES AT THE WEST AND EAST ABUTMENTS FROM THE GROUND LINE TO THE LOWER DECK.

4. ALL EXTERIOR SURFACES WEST OF THE WEST ABUTMENT FROM THE GROUNDLINE TO THE UNDERSIDE OF THE UPPER DECK.

5. ALL EXTERIOR SURFACES EAST OF THE EAST ABUTMENT FROM THE GROUNDLINE TO THE UNDERSIDE OF THE UPPER DECK.

6. PORTIONS OF STRUCTURE AS SHOWN ON SHEET 223/270.

THE COLOR SHALL BE WHITE, FEDERAL SPEC. NO. 37722.

ALL EXPOSED PORTIONS OF CORBELS AND COLUMNS WHICH ARE TO BE CONCEALED BEHIND THE EXTERIOR PIER SHAFTS SHALL BE SEALED PRIOR TO INSTALLATION OF NEW CONCRETE ON THE PIER SHAFTS.

PAYMENT FOR THIS WORK SHALL BE INCLUDED WITH ITEM SPECIAL, WATERPROOFING MISC.: SEALING OF CONCRETE SURFACES, MODIFIED EPOXY-URETHANE.

43. PAINTING

THE CONTRACTOR'S LUMP SUM PRICES BID FOR ITEM SPECIAL, FIELD PAINTING OF EXISTING STEEL, INTERMEDIATE COAT, SYSTEM OZEU; ITEM SPECIAL, FIELD PAINTING OF EXISTING STEEL FINISH COAT, SYSTEM OZEU AND ITEM 514, FIELD PAINTING OF NEW STEEL, SYSTEM IZEU TOGETHER SHALL COMPRISE FULL COMPENSATION FOR ALL LABOR, EQUIPMENT, MATERIALS AND INCIDENTALS NECESSARY TO COMPLETE THE INTERMEDIATE AND FINISH PAINTING OF THE FOLLOWING ITEMS:

1. ALL STRUCTURAL STEEL OF SPAN 4, NEW OR EXISTING.

2. ALL STEEL LOWER DECK RAILINGS.

3. RETAINING WALL RAILING.

4. ALL STEEL CURB PLATES INCLUDING PLATES AT DECK OPENINGS OF SPAN 4.

5. ALL EXPANSION JOINT MATERIAL.

SURFACE PREPARATION AND PRIMING OF ALL EXISTING STEEL SHALL BE INCLUDED WITH ITEM SPECIAL, SURFACE PREPARATION OF EXISTING STEEL, SYSTEM OZEU, AND FIELD PAINTING OF EXISTING STEEL, PRIME COAT, SYSTEM OZEU. SURFACE PREPARATION AND

COUNTY BRIDGE NO. 84

HOWARD NEEDLES TAMMEN & BERGENDOFF
ARCHITECTS ENGINEERS PLANNERS
HNTB

GENERAL NOTES
BR. NO. CUY - 6 - 1499
REHABILITATION OF
VETERANS MEMORIAL BRIDGE
(U.S. 6, 20, 42 & S.R. 3 OVER CUYAHOGA RIVER)
CLEVELAND CUYAHOGA COUNTY OHIO

DRAWN	TRACED	CHECKED	REVIEWED	REVISED
B.E.B.	B.F.	A.D.Y.	C.A.B.	
DATE 3/22/94	DATE 3/28/94	DATE 3/30/94	DATE 3/31/94	SHEET 13/270

GENERAL NOTES - STRUCTURES OVER 20-FT SPAN

FHWA REGION	STATE	PROJECT	
5	OHIO		

145/412

CUYAHOGA COUNTY
CUY - 6 - 14.99

PRIMING OF NEW ITEMS SHALL BE INCLUDED WITH THE COST OF THE ITEMS.

NO ADDITIONAL PAYMENT WILL BE MADE FOR PAINTING OF NEW STEEL WHICH REPLACES EXISTING STEEL AS DIRECTED BY THE ENGINEER AND NOT COVERED IN THE PLANS. ALL WORK SHALL BE IN ACCORDANCE WITH THE PROPOSAL NOTES.
ALL STRUCTURAL STEEL AT PANEL POINTS 0 AND 0' ADJACENT TO PIERS 3 AND 4 SHALL BE PAINTED AFTER THE PIER WALLS HAVE BEEN REMOVED AND PRIOR TO INSTALLING THE NEW PIER WALLS. PAINT COLOR SHALL BE IN ACCORDANCE WITH FEDERAL SPEC. NO. 36320 (GRAY), EXCEPT FOR THE RETAINING WALL RAILING WHICH SHALL BE BLACK.

44. ITEM SPECIAL - LOWER DECK RAILING

A. DESCRIPTION

THIS ITEM SHALL CONSIST OF FURNISHING AND INSTALLING STEEL HANDRAIL ON THE LOWER DECK OF THE STRUCTURE, EXCEPT SPAN 4, IN ACCORDANCE WITH THESE SPECIFICATIONS AND IN REASONABLY CLOSE CONFORMANCE WITH THE LINES, GRADES, LOCATIONS, DETAILS, AND NOTES SHOWN ON THE PLANS.

B. MATERIALS

STEEL TUBING FOR POSTS SHALL CONFORM TO THE REQUIREMENTS OF ASTM A501. STEEL MEETING THE REQUIREMENTS OF ASTM A500, GRADE B, MAY BE SUBSTITUTED WHEN A501 IS NOT AVAILABLE. STEEL PIPE FOR HANDRAILS SHALL CONFORM TO THE REQUIREMENTS OF ASTM A53, GRADE B, OR ASTM A501. CEMENT SHALL MEET THE REQUIREMENTS OF 701. SAND SHALL MEET THE REQUIREMENTS OF 703.03.

C. REQUIREMENTS

THE LINE AND GRADE OF THE RAILING SHALL BE TRUE TO THAT SHOWN ON THE PLANS. RAILING POSTS SHALL BE NORMAL TO GRADE LINE. HANDRAILS SHALL BE PARALLEL TO GRADE LINE.

FABRICATION SHALL BE IN ACCORDANCE WITH ALL APPLICABLE PROVISIONS OF ITEM 513. RAILINGS SHALL BE FABRICATED IN AS LONG SECTIONS AS PRACTICABLE, AND JOINTS BETWEEN SECTIONS SHALL BE FULL PENETRATION BUTT WELDED, GROUND SMOOTH.

RAILINGS SHALL BE SHOP PRIME PAINTED IN ACCORDANCE WITH 513.222 AND 514.01 THROUGH 514.04. THIS COATING SHALL CONFORM TO 708.17, INORGANIC ZINC SILICATE PRIMER PAINT. THICKNESS OF THE PRIME COAT AND MEASUREMENT OF THE THICKNESS SHALL CONFORM TO REQUIREMENTS SET FORTH IN ITEM 514, FIELD PAINTING OF NEW STEEL, SYSTEM IZEU. AFTER INSTALLATION ANY ABRADED, CORRODED, AND FIELD WELDED AREAS SHALL BE CLEANED AND TOUCHED UP WITH THE SAME TYPE OF PAINT USED IN SHOP PAINTING. THE RAILINGS SHALL BE FIELD PAINTED USING SYSTEM IZEU, IN ACCORDANCE WITH THE PROPOSAL NOTE. PAYMENT FOR FIELD PAINTING SHALL BE INCLUDED IN THE LUMP SUM PRICE BID FOR ITEM 514, FIELD PAINTING OF NEW STEEL, SYSTEM IZEU.

ALL FASTENERS AND INCIDENTALS USED TO ATTACH THE RAILING SHALL BE GALVANIZED ACCORDING TO 711.02.

D. METHOD OF MEASUREMENT

THE QUANTITY WILL BE MEASURED AS THE ACTUAL LINEAR FEET OF LOWER DECK RAILING INSTALLED AS SPECIFIED. THE QUANTITY SO MEASURED SHALL INCLUDE ALL LABOR, MATERIALS, EQUIPMENT, AND INCIDENTALS NECESSARY TO SATISFACTORILY PERFORM THIS WORK.

E. BASIS OF PAYMENT

THE PAYMENT WILL BE MADE AT THE CONTRACT UNIT PRICE BID FOR:

ITEM	UNIT	DESCRIPTION
SPECIAL	LIN. FT.	LOWER DECK RAILING

45. ITEM SPECIAL - RETAINING WALL RAILING

A. DESCRIPTION

THIS ITEM SHALL CONSIST OF FURNISHING AND INSTALLING STEEL RAILING ON THE TOP OF THE EXISTING RETAINING WALL ADJACENT TO SUPERIOR AVENUE, IN ACCORDANCE WITH THESE SPECIFICATIONS AND IN REASONABLY CLOSE CONFORMANCE WITH THE LINES, GRADES, LOCATIONS, DETAILS, NOTES SHOWN ON THE PLANS, AND THE EXISTING RAILING WHICH ABUTS THE PROPOSED RAILING.

B. MATERIAL

STEEL TUBING SHALL CONFORM TO THE REQUIREMENTS OF ASTM A501. STEEL MEETING THE REQUIREMENTS OF ASTM A500, GRADE B, MAY BE SUBSTITUTED WHEN A501 IS NOT AVAILABLE. ALL OTHER STEEL SHALL BE ASTM A36.

C. REQUIREMENTS

RAILING POSTS SHALL BE NORMAL TO THE TOP OF THE WALL. RAILING PANELS SHALL BE PARALLEL WITH THE TOP OF THE WALL. FABRICATION SHALL BE IN ACCORDANCE WITH ALL APPLICABLE PROVISIONS OF ITEM 513.

RAILINGS SHALL BE SHOP PRIME PAINTED IN ACCORDANCE WITH 513.222 AND 514.01 THROUGH 514.04. THIS COATING SHALL CONFORM TO 708.17, INORGANIC ZINC SILICATE PRIMER PAINT. THICKNESS OF THE PRIME COAT AND MEASUREMENT OF THE THICKNESS SHALL CONFORM TO REQUIREMENTS SET FORTH IN ITEM 514, FIELD PAINTING OF NEW STEEL, SYSTEM IZEU. AFTER INSTALLATION, ANY ABRADED, CORRODED, AND FIELD WELDED AREAS SHALL BE CLEANED AND TOUCHED UP WITH THE SAME TYPE OF PAINT USED IN SHOP PAINTING. THE RAILINGS SHALL BE FIELD PAINTED USING SYSTEM IZEU, IN ACCORDANCE WITH THE PROPOSAL NOTE. PAYMENT FOR FIELD PAINTING SHALL BE INCLUDED IN THE LUMP SUM PRICE BID FOR ITEM 514, FIELD PAINTING OF NEW STEEL, SYSTEM IZEU.

ALL FASTENERS AND INCIDENTALS USED TO CONNECT THE RAILING SHALL BE GALVANIZED ACCORDING TO 711.02.

D. METHOD OF MEASUREMENT

THE QUANTITY WILL BE MEASURED AS THE ACTUAL LINEAR FEET OF RETAINING WALL RAILING INSTALLED AS SPECIFIED. THE QUANTITY SO MEASURED SHALL INCLUDE ALL LABOR, MATERIALS, EQUIPMENT, AND INCIDENTALS NECESSARY TO SATISFACTORILY PERFORM THIS WORK.

E. BASIS OF PAYMENT

THE PAYMENT WILL BE MADE AT THE CONTRACT UNIT PRICE BID FOR:

ITEM	UNIT	DESCRIPTION
SPECIAL	LIN. FT.	RETAINING WALL RAILING

46. ITEM SPECIAL - UPPER DECK RAILING

A. DESCRIPTION

THIS WORK SHALL CONSIST OF CONSTRUCTING CONCRETE UPPER DECK RAILINGS IN ACCORDANCE WITH THESE SPECIFICATIONS AND WITHIN REASONABLY CLOSE CONFORMITY TO THE LINES, GRADES, LOCATIONS, DETAILS, AND NOTES SHOWN ON THE PLANS.

B. GENERAL

THE LINE AND GRADE OF THE RAILING SHALL BE TRUE TO THAT SHOWN ON THE PLANS. RAILING POSTS AND BALUSTERS SHALL BE VERTICAL. TOPS OF RAILINGS SHALL BE PARALLEL TO GRADE LINE. ALL SHORES OR FALSEWORK SUPPORTING THE SUPERSTRUCTURE SHALL BE REMOVED OR RELEASED BEFORE CONSTRUCTING THE RAILING.

C. MATERIALS

COARSE AGGREGATE FOR ALL PORTIONS OF THE RAILING CONCRETE SHALL BE NO. 8 SIZE. CONCRETE FOR THE BALUSTERS SHALL BE IN ACCORDANCE WITH ALL APPLICABLE PROVISIONS OF ITEM SPECIAL, SUPERPLASTICIZED CONCRETE. CONCRETE FOR THE REMAINING PORTIONS OF THE RAILING SHALL BE IN ACCORDANCE WITH ALL APPLICABLE PROVISIONS OF ITEM SPECIAL, SUPERPLASTICIZED CONCRETE, EXCEPT FOR THE RAILINGS OF SPAN 4 WHICH SHALL BE IN ACCORDANCE WITH ITEM SPECIAL, CLASS S LIGHTWEIGHT CONCRETE, SUPERSTRUCTURE.

REINFORCING STEEL SHALL BE EPOXY COATED AND CONFORM TO THE REQUIREMENTS OF 509 AND 709. PREFORMED FILLERS (SPONGE RUBBER OR PVC) SHALL CONFORM TO THE REQUIREMENTS OF 705.03 AND 711.28.

D. BALUSTERS

PLANTS FOR THE MANUFACTURE OF PRECAST CONCRETE BALUSTERS SHALL BE APPROVED BY THE DIRECTOR BEFORE BALUSTERS ARE PRODUCED. REQUESTS FOR SUCH APPROVALS SHALL BE SUBMITTED TO THE DIRECTOR AT LEAST THREE WEEKS PRIOR TO THE DATE OF MANUFACTURE OF BALUSTERS. REQUESTS SHALL INCLUDE DETAILS OF THE PLANT FACILITIES AND THE PRODUCTION METHOD THE MANUFACTURER INTENDS TO USE. SATISFACTORY QUALIFICATION ON PREVIOUS PROJECTS OF SIMILAR TYPE WILL BE ACCEPTED AS PREQUALIFICATION PROVIDED THAT PLANT OPERATIONS CONTINUE TO BE SATISFACTORY.

BALUSTER CONCRETE SHALL BE FIBER REINFORCED. FIBERS SHALL BE IN ACCORDANCE WITH THE FOLLOWING:

1. FIBERS SHALL BE 3/4-INCH LONG MINIMUM, 100% VIRGIN NYLON, 6-8 DENIER PER FILAMENT. FIBERS SHALL BE MANUFACTURED BY EXTRUSION. FIBERS SHALL NOT BE PRODUCED BY SLITTING OR CHOPPING OF SHEET MATERIAL.
2. FIBERS SHALL BE PACKAGED IN SEALED BAGS.
3. DOSE FIBERS AT A RATE OF 8 LB. PER CUBIC YARD OF CONCRETE.
4. FIBERS SHALL MEET THE FOLLOWING PERFORMANCE REQUIREMENTS:
   A. ASTM C1116, "STANDARD SPECIFICATION FOR FIBER-REINFORCED CONCRETE AND SHOTCRETE," DESIGNATION TYPE III, 4.1.3.
   B. MINIMUM PLASTIC SHRINKAGE CRACK REDUCTION OF 70% WHEN TESTED IN ACCORDANCE WITH ICBO ES, APPENDIX B (7-92).
   C. ONE POUND OF FIBERS SHALL CONTAIN NO LESS THAN 34 MILLION INDIVIDUAL FIBERS.
   D. PHYSICAL CHARACTERISTICS

      SPECIFIC GRAVITY = 1.16
      TENSILE STRENGTH = 140 KSI
      ELASTIC MODULUS = 750 KSI
5. USE FIBERS IN STRICT ACCORDANCE WITH THE MANUFACTURER'S RECOMMENDATIONS AND WITHIN TIME AS SPECIFIED IN ASTM C94.

THE BALUSTERS SHALL BE GIVEN AN ACCELERATED CURE BY LOW PRESSURE STEAM OR RADIANT HEAT WITHIN A SUITABLE ENCLOSURE TO CONTAIN THE LIVE STEAM OR HEAT. THE INITIAL APPLICATION OF THE STEAM OR HEAT SHALL BE FROM TWO TO FOUR HOURS AFTER THE FINAL PLACEMENT OF CONCRETE TO ALLOW THE INITIAL SET TO TAKE PLACE. IF RETARDERS ARE USED, THE WAITING PERIOD SHALL BE INCREASED TO FOUR TO SIX HOURS. THE TIME OF INITIAL SET MAY BE DETERMINED BY ASTM C403, AND THE TIME LIMITS DESCRIBED ABOVE MAY THEN BE WAIVED.

COUNTY BRIDGE NO. 84

HOWARD NEEDLES TAMMEN & BERGENDOFF
ARCHITECTS ENGINEERS PLANNERS
HNTB

GENERAL NOTES
BR. NO. CUY - 6 - 1499
REHABILITATION OF
VETERANS MEMORIAL BRIDGE
(U.S. 6, 20, 42 & S.R. 3 OVER CUYAHOGA RIVER)
CLEVELAND CUYAHOGA COUNTY OHIO

DRAWN B.E.B.	TRACED B.F.	CHECKED A.D.Y.	REVIEWED C.A.B.	REVISED
DATE 3/22/94	DATE 3/28/94	DATE 3/30/94	DATE 3/31/94	SHEET 14 /270

GENERAL NOTES - STRUCTURES OVER 20-FT SPAN

FHWA REGION	STATE	PROJECT	
5	OHIO		

146/412

CUYAHOGA COUNTY
CUY - 6 - 14.99

DURING THE WAITING PERIOD THE TEMPERATURE WITHIN THE CURING ENCLOSURE SHALL NOT BE LESS THAN 50F (10C).

DURING THE INITIAL APPLICATION OF LIVE STEAM OR RADIANT HEAT, THE AMBIENT TEMPERATURE WITHIN THE CURING ENCLOSURE SHALL INCREASE AT AN AVERAGE RATE NOT EXCEEDING 40F (4C) PER HOUR UNTIL THE CURING TEMPERATURE IS REACHED. THE MAXIMUM CURING TEMPERATURE SHALL NOT EXCEED 160F (71C). THE MAXIMUM TEMPERATURE SHALL BE HELD UNTIL THE CONCRETE HAS REACHED 4,500 PSI.

(1) CURING WITH LOW PRESSURE STEAM. APPLICATION OF LIVE STEAM SHALL NOT BE DIRECTED ON THE CONCRETE FORMS SO AS TO CAUSE LOCALIZED HIGH TEMPERATURE.

(2) CURING WITH RADIANT HEAT. RADIANT HEAT MAY BE APPLIED BY MEANS OF PIPES CIRCULATING STEAM, NOT OIL OR HOT WATER, OR BY ELECTRIC HEATING ELEMENTS. MOISTURE LOSS SHALL BE MINIMIZED BY COVERING ALL EXPOSED CONCRETE SURFACES WITH PLASTIC SHEETING OR BY APPLYING AN APPROVED LIQUID MEMBRANE CURING COMPOUND TO ALL EXPOSED CONCRETE SURFACES. SURFACES TO WHICH FIELD-CAST CONCRETE OR OTHER MATERIALS WILL BE BONDED IN THE FINISHED STRUCTURE SHALL HAVE THE CURING COMPOUND REMOVED FROM THEM UNLESS TESTS ARE PERFORMED WHICH PROVE THAT THE RESIDUE OF THE MEMBRANE DOES NOT ADVERSELY AFFECT THE BOND STRENGTH.

CAVITIES IN THE SURFACE OF THE BALUSTERS SHALL BE NEATLY FILLED WITH GROUT. BALUSTERS SHALL BE DOWELED AND GROUTED INTO THE BOTTOM PARAPET IN ACCORDANCE WITH SUPPLEMENTAL SPECIFICATION 852 AND CMS 705.20. NO SEPARATE PAYMENT WILL BE MADE FOR DOWEL HOLES.

E. CURING

CURING SHALL BE IN ACCORDANCE WITH ITEM 511, CLASS S CONCRETE, SUPERSTRUCTURE, USING SHRINKAGE COMPENSATING CEMENT.

F. SURFACE FINISH

ALL EXPOSED FACES OF THE RAILING SHALL HAVE A RUBBED FINISH IN ACCORDANCE WITH 511.15. DEFECTS SHALL BE CORRECTED PRIOR TO RUBBING WITH A CEMENT MORTAR OF THE SAME PROPORTIONS AS THE CONCRETE.

G. METHOD OF MEASUREMENT

THE QUANTITY WILL BE MEASURED AS THE ACTUAL LINEAR FEET OF RAILING INCLUDING END TERMINAL POSTS INSTALLED AS SPECIFIED. THE QUANTITY SO MEASURED SHALL INCLUDE ALL LABOR, MATERIALS, EQUIPMENT, AND INCIDENTALS NECESSARY TO SATISFACTORILY PERFORM THIS WORK.

H. BASIS OF PAYMENT

THE PAYMENT WILL BE MADE AT THE CONTRACT UNIT PRICE BID FOR:

ITEM	UNIT	DESCRIPTION
SPECIAL	LIN. FT.	UPPER DECK RAILING

47. ITEM SPECIAL - ALUMINUM FENCE

A. DESCRIPTION

THIS ITEM SHALL CONSIST OF FURNISHING AND INSTALLING ALUMINUM FENCE, IN ACCORDANCE WITH THESE SPECIFICATIONS AND IN REASONABLY CLOSE CONFORMANCE WITH THE LINES, GRADES, LOCATIONS, DETAILS, AND NOTES SHOWN ON THE PLANS.

B. MATERIALS

ALL FENCE POSTS, RAILS, AND PICKETS SHALL BE ALUMINUM IN ACCORDANCE WITH 711.20. ANCHORS SHALL BE AN EPOXY-RESIN ADHESIVE ANCHOR SYSTEM ACCORDING TO SUPPLEMENTAL SPECIFICATION 852 AND CONSTRUCTION AND MATERIALS SPECIFICATION 705.20. ALL BOLTS SHALL BE STAINLESS STEEL AISI, TYPE 304 OR 316.

C. REQUIREMENTS

THE CONTRACTOR SHALL FURNISH SHOP DRAWINGS FOR THE FENCE IN CONFORMANCE WITH THE REQUIREMENTS OF ITEM 513, STRUCTURAL STEEL (AISC CATEGORY I), AS PER PLAN. THE LINE AND GRADE OF THE FENCE SHALL BE TRUE TO THAT SHOWN ON THE PLANS. FENCE POSTS AND PICKETS SHALL BE VERTICAL. TOP AND BOTTOM RAILS SHALL BE PARALLEL TO GRADE LINE. THE FENCE SHALL BE ANODIZED ALUMINUM PEWTER FINISH.

CARE SHALL BE TAKEN TO AVOID SCRATCHES, DENTS, OR OTHER DEFECTS THAT MAY AFFECT THE DURABILITY OR APPEARANCE OF THE FENCE.

ALL BOLTS SHALL BE COATED WITH ALUMINUM-IMPREGNATED CAULKING COMPOUND AND THE SPACE BETWEEN THE BOLTS AND THE ALUMINUM SHALL BE FILLED WITH THE SAME MATERIAL.

WHERE ALUMINUM IS TO BE IN CONTACT WITH CONCRETE, THE CONTACT SURFACES SHALL BE THOROUGHLY COATED WITH AN ALUMINUM-IMPREGNATED CAULKING COMPOUND OR WITH HEAVY BITUMINOUS PAINT, PROVIDED THE EXPOSED PAINT SHALL BE PIGMENTED WITH ALUMINUM POWDER OR PASTE, SO AS TO HAVE AN ALUMINUM APPEARANCE.

WELDING WILL BE PERMITTED ONLY WHERE SPECIFICALLY CALLED FOR ON THE PLANS, AND IT SHALL BE DONE BY THE INERT GAS SHIELDED METAL-ARC OR TUNGSTEN-ARC METHOD WITHOUT FLUX, OR BY OTHER APPROVED METHODS.

D. ALTERNATE DESIGN

A PROPRIETARY FENCE SIMILAR IN APPEARANCE TO THE FENCE DETAILED IN THE PLANS MAY BE USED AT THE CONTRACTOR'S OPTION, SUBJECT TO THE APPROVAL OF THE ENGINEER. THE FENCE MUST MEET THE FOLLOWING DESIGN REQUIREMENTS:

1. PICKET SPACING MUST BE AS DETAILED IN THE PLANS.
2. BOTTOMS OF PICKETS MUST BE NO MORE THAN 1" ABOVE THE TOP OF THE PARAPET.
3. HEIGHT OF FENCE MUST BE AS DETAILED IN THE PLANS.
4. PICKETS SHALL WITHSTAND A SIMULTANEOUS HORIZONTAL AND VERTICAL CONCENTRATED LOAD OF 12.5 POUNDS, EACH PLACED ANYWHERE ALONG THE PICKET.
5. SECTION PROPERTIES OF PROPOSED MEMBERS SHALL NOT BE LESS THAN OF MEMBERS SHOWN IN THE PLANS.
6. TOP RAIL SHALL WITHSTAND A SIMULTANEOUS HORIZONTAL AND VERTICAL UNIFORM LOAD OF 50 POUNDS PER FOOT.
7. BOTTOM RAIL TO BE SAME SIZE AS TOP RAIL.

IF THE CONTRACTOR DESIRES TO USE AN ALTERNATE FENCE, THE CONTRACTOR SHALL SUBMIT DESIGN CALCULATIONS, SEALED BY AN OHIO REGISTERED PROFESSIONAL ENGINEER, VERIFYING THAT THE PROPOSED FENCE MEETS THESE DESIGN REQUIREMENTS.

E. METHOD OF MEASUREMENT

THE QUANTITY WILL BE MEASURED AS THE ACTUAL LINEAR FEET OF ALUMINUM FENCE INSTALLED AS SPECIFIED. THE QUANTITY SO MEASURED SHALL INCLUDE ALL LABOR, MATERIALS, EQUIPMENT, AND INCIDENTALS NECESSARY TO SATISFACTORILY PERFORM THIS WORK.

F. BASIS OF PAYMENT

THE PAYMENT WILL BE MADE AT THE CONTRACT UNIT PRICE BID FOR:

ITEM	UNIT	DESCRIPTION
SPECIAL	LIN. FT.	ALUMINUM FENCE

8. GUARDRAIL

A. DESCRIPTION

ALL PROVISIONS OF ITEM 606 SHALL APPLY EXCEPT AS MODIFIED HEREIN. THIS WORK SHALL CONSIST OF THE CONSTRUCTION OF GUARDRAIL IN ACCORDANCE WITH THESE SPECIFICATIONS AND IN REASONABLY CLOSE CONFORMITY WITH THE LINES, GRADES, AND DETAILS SHOWN ON THE PLANS OR ESTABLISHED BY THE ENGINEER.

B. REQUIREMENTS

GUARDRAIL POST SPACING AND ANCHORAGE DETAILS SHALL BE AS DETAILED IN THE PLANS. GUARDRAILS SHALL BE CONSTRUCTED WITHOUT SPACER BLOCKS.

C. METHOD OF MEASUREMENT

THE QUANTITY WILL BE MEASURED AS THE ACTUAL LINEAR FEET OF GUARDRAIL INSTALLED AS SPECIFIED, TO THE LIMITS SHOWN IN THE PLANS. THE QUANTITY SO MEASURED SHALL INCLUDE ALL LABOR, MATERIALS, EQUIPMENT, AND INCIDENTALS NECESSARY TO SATISFACTORILY PERFORM THIS WORK.

D. BASIS OF PAYMENT

THE PAYMENT WILL BE MADE AT THE CONTRACT UNIT PRICE BID FOR:

ITEM	UNIT	DESCRIPTION
606	LIN. FT.	GUARDRAIL, TYPE 4, AS PER PLAN
606	LIN. FT.	GUARDRAIL, TYPE 5, AS PER PLAN

49. ITEM SPECIAL - REMOVE, STORE, AND REINSTALL IMPACT ATTENUATORS

THE CONTRACTOR SHALL FURNISH ALL LABOR, MATERIALS, AND EQUIPMENT TO REMOVE TWO (2) EXISTING IMPACT ATTENUATORS ADJACENT TO SPAN 4 IN THEIR ENTIRETY, STORE AND REINSTALL THE IMPACT ATTENUATORS.

THE IMPACT ATTENUATORS ARE THE LMA ™ SYSTEM BY ENERGY ABSORPTION SYSTEMS, INC. THE CONTRACTOR SHALL BE RESPONSIBLE TO ENSURE THAT THE ATTENUATORS ARE NOT DAMAGED DURING REMOVAL, STORAGE, OR REINSTALLATION. THE ATTENUATORS SHALL BE INSTALLED WITH STRICT ADHERENCE TO MANUFACTURER'S INSTALLATION INSTRUCTIONS. THIS WORK WILL BE PAID FOR AT THE CONTRACT LUMP SUM PRICE BID WHICH PRICE AND PAYMENT SHALL BE FULL COMPENSATION FOR ALL LABOR, EQUIPMENT, MATERIALS, AND INCIDENTALS NECESSARY TO COMPLETE THE WORK IN CONFORMANCE WITH THESE REQUIREMENTS, AND TO THE SATISFACTION OF THE ENGINEER.

SUPPLIER OF IMPACT ATTENUATORS:

ENERGY ABSORPTION SYSTEMS, INC.
ONE E. WACKER DRIVE
CHICAGO, IL 60601-2076

50. ITEM SPECIAL - FLAGPOLES, MONUMENTS, PLANTERS, AND BENCHES

THE CONTRACTOR SHALL FURNISH ALL LABOR, MATERIALS, AND EQUIPMENT TO REMOVE SIX (6) EXISTING FLAGPOLES AND TWO (2) EXISTING BRONZE PLAQUES AT THE EAST STATION, STORE AND REINSTALL THE SAME AT THE DESIGNATED LOCATIONS IN THE REBUILT STRUCTURE. THE CONTRACTOR SHALL ALSO REMOVE THE EXISTING MONUMENTS, PLANTERS AND BENCHES, AND REPLACE THEM AS SPECIFIED IN THE PLANS.

- REVISED D-12 7/1/94

COUNTY BRIDGE NO. 84

HOWARD NEEDLES TAMMEN & BERGENDOFF
ARCHITECTS ENGINEERS PLANNERS
HNTB

GENERAL NOTES
BR. NO. CUY - 6 - 1499
REHABILITATION OF
VETERANS MEMORIAL BRIDGE
(U.S. 6, 20, 42 & S.R. 3 OVER CUYAHOGA RIVER)
CLEVELAND CUYAHOGA COUNTY OHIO

DESIGNED	DRAWN	TRACED	CHECKED	REVIEWED	REVISED
	B.E.B.	B.F.	A.D.Y.	C.A.B.	
	DATE 3/22/94	DATE 3/28/94	DATE 3/30/94	DATE 3/31/94	SHEET 15 /270

GENERAL NOTES - STRUCTURES OVER 20-FT SPAN

THE CONTRACTOR SHALL PROTECT THE EXISTING CONCRETE MONUMENT INCLUDING STONEWORK AND BRONZE PLAQUE AT THE END OF THE EXISTING RAILING AT THE NORTHEAST CORNER OF THE BRIDGE DURING CONSTRUCTION OPERATIONS. THIS MONUMENT SHALL BE INCORPORATED INTO THE NEW BRIDGE RAILING.

THIS WORK SHALL BE PAID FOR AT THE CONTRACT LUMP SUM PRICE BID, WHICH PRICE AND PAYMENT SHALL BE FULL COMPENSATION FOR ALL LABOR, EQUIPMENT, MATERIALS, AND INCIDENTALS NECESSARY TO COMPLETE THE WORK IN CONFORMANCE WITH THESE REQUIREMENTS, PLAN DETAILS AND TO THE SATISFACTION OF THE ENGINEER.

51. ITEM SPECIAL - BRONZE NAME PLATES

A. DESCRIPTION

THIS WORK SHALL CONSIST OF THE FURNISHING AND INSTALLING THREE (3) NEW BRONZE NAME PLATES AT SPAN 4 TRUSS PANEL POINTS, UO(S) AND UO'(S), TWO (2) NEW PIN HOLE COVERS AT PANEL POINT UO'(S) AND REMOVAL AND RECONDITIONING OF FIVE (5) EXISTING NAME PLATES AT PANEL POINTS UO(N), UO'(N) AND UO(S) IN ACCORDANCE WITH THESE SPECIFICATIONS AND REASONABLY CLOSE CONFORMANCE WITH PLAN DETAILS.

B. REQUIREMENTS

ALL EXISTING PLATES SHALL BE REMOVED AND CLEANED TO BE SIMILAR IN APPEARANCE WITH THE NEW PLATES. THE CONTRACTOR SHALL USE CARE IN REMOVAL NOT TO DAMAGE THE EXISTING PLATES. ANY CONTRACTOR RELATED DAMAGE SHALL BE REPAIRED TO THE SATISFACTION OF THE ENGINEER AT THE CONTRACTOR'S EXPENSE.

THE NEW PIN HOLE COVERS SHALL BE MADE OF CAST STEEL MEETING THE REQUIREMENTS OF ASTM A27, GRADE 65-35. THE NEW NAME PLATES SHALL BE MADE OF CAST BRONZE MEETING THE REQUIREMENTS OF ASTM B22 COPPER ALLOY UNS NO. C91100, OR ASTM B100, AND SHALL BE SIMILAR IN DETAIL TO THE ORIGINAL PLATES. AT THE CONTRACTOR'S OPTION AN EXISTING PLATE MAY BE USED AS A PATTERN FOR THE NEW PLATES. ALL PLATES SHALL BE INSTALLED AFTER CLEANING AND PAINTING OF THE AREAS CONCEALED BEHIND THE PLATES IS COMPLETE.

C. BASIS OF PAYMENT

THE WORK WILL BE PAID FOR AT THE CONTRACT LUMP SUM PRICE BID, WHICH PRICE AND PAYMENT SHALL BE FULL COMPENSATION FOR ALL LABOR, EQUIPMENT, MATERIALS, AND INCIDENTALS NECESSARY TO COMPLETE THE WORK IN CONFORMANCE WITH THESE REQUIREMENTS, PLAN DETAILS, AND TO THE SATISFACTION OF THE ENGINEER.

52. ENGINEERED FILL

A. DESCRIPTION

THIS WORK CONSISTS OF FURNISHING AND PLACING A LOW DENSITY, LIGHTWEIGHT, FLOWABLE, LOW ABSORBABILITY, CEMENTITIOUS FILL MATERIAL, HEREINAFTER REFERRED TO AS ENGINEERED FILL, IN ACCORDANCE WITH THESE SPECIFICATIONS AND IN REASONABLY CLOSE CONFORMITY WITH DETAILS SHOWN ON THE PLANS OR ESTABLISHED BY THE ENGINEER.

B. CONTRACTOR QUALIFICATIONS

IN ADDITION TO BEING PREQUALIFIED, THE SUBCONTRACTOR SHALL BE REGULARLY ENGAGED IN THE PLACEMENT OF ENGINEERED FILL MATERIAL AND SHALL HAVE COMPLETED MASS FILLS HAVING A MINIMUM QUANTITY OF 40,000 TOTAL CUBIC YARDS IN THE PAST FIVE YEARS. THE ENGINEERED FILL MATERIAL SHALL HAVE BEEN SUCCESSFULLY PLACED FOR AT LEAST TEN PROJECTS WHICH HAVE PERFORMED SATISFACTORILY FOR AT LEAST TEN YEARS. THE CONTRACTOR SHALL SUBMIT THESE QUALIFICATIONS TO THE DIRECTOR FOR APPROVAL OF THE SUBCONTRACTOR.

THE PRIME CONTRACTOR IS REQUIRED TO DECLARE WHAT ENGINEERED FILL SHALL BE SUPPLIED BY ONE OF THE FOLLOWING APPROVED MANUFACTURERS:

1. ELASTIZELL
   ELASTIZELL CORPORATION OF AMERICA
   P. O. BOX 1462
   ANN ARBOR, MICHIGAN 48106
   TELEPHONE: (313) 761-6900

2. MEARLCRETE
   THE MEARL CORPORATION
   220 WESTFIELD AVENUE WEST
   ROSELLE PARK, N.J. 07204
   TELEPHONE: (201) 245-9500

C. MATERIALS

THE MATERIALS USED TO PRODUCE THE ENGINEERED FILL SHALL CONFORM TO THE FOLLOWING REQUIREMENTS:

1. CEMENT: THE PORTLAND CEMENT SHALL COMPLY WITH ASTM C150. POZZOLANS AND OTHER CEMENTITIOUS MATERIALS MAY BE USED WHEN SPECIFICALL APPROVED BY THE MANUFACTURER OF THE ENGINEERED FILL.

2. WATER: THE WATER SHALL BE POTABLE AND FREE FROM DELETERIOUS AMOUNTS OF ALKALI, ACID, AND ORGANIC MATERIALS WHICH WOULD ADVERSELY AFFECT THE SETTING TIME OR STRENGTH OF THE ENGINEERED FILL.

3. ADMIXTURES: ADMIXTURES FOR WATER REDUCING, RETARDING, ACCELERATING, IMPROVING THE BOND, AND FOR OTHER SPECIFIC PROPERTIES MAY BE USED WHEN SPECIFICALLY APPROVED BY THE MANUFACTURER OF THE ENGINEERED FILL.

4. PROPERTIES: THE ENGINEERED FILL SHALL HAVE THE FOLLOWING PROPERTIES WHICH SHALL BE VERIFIED BY SUBMISSION OF CERTIFIED TEST DATA:

	CLASS III
(A) MINIMUM CAST DENSITY	36 PCF
(B) MINIMUM COMPRESSIVE STRENGTH	80 PSI
(C) FREEZE-THAW RESISTANCE MIN. CYCLES @ RELATIVE E=70% PER ASTM C666 - MODIFIED	330 CYCLES
(D) COEFFICIENT OF PERMEABILITY (CM/SEC) PER ASTM D2434	
@ 2.5 PSI	4.4×10^{-6}
@ 18 PSI	3.1×10^{-7}

(E) WATER ABSORPTION

	CLASS III
LONG TERM IMMERSION AS % OF CAST DENSITY (120 DAYS) PER ASTM C796	8-14%

D. TESTING

TESTING BY PRIVATE TESTING COMPANY, SHALL BE IN ACCORDANCE WITH THE FOLLOWING PROCEDURES:

1. CAST DENSITY: DURING PLACEMENT OF THE INITIAL BATCHES, CHECK THE DENSITY AND ADJUST THE MIX AS REQUIRED TO OBTAIN THE SPECIFIED CAST DENSITY AT THE POINT OF PLACEMENT. AT HOURLY INTERVALS DURING PLACING, MONITOR THE DENSITY AND ADJUST AS NECESSARY TO MAINTAIN THE SPECIFIED CAST DENSITY.

2. SAMPLING: TAKE AT LEAST FOUR (4) TEST SPECIMENS FOR EACH 300 CUBIC YARDS OF ENGINEERED FILL PLACED OR FOR EACH FOUR (4) HOURS OF PLACING. TEST THE SPECIMENS IN ACCORDANCE WITH ASTM C495 EXCEPT AS FOLLOWS:

   (A) THE SPECIMENS SHALL BE 3" x 6" CYLINDERS UNLESS OTHERWISE APPROVED BY THE ENGINEER. TO PREVENT DAMAGE AND LOSS OF MOISTURE, COVER AND PROTECT SPECIMENS IMMEDIATELY AFTER CASTING.

   (B) MOIST CURE THE SPECIMENS FOR A PERIOD OF UP TO SEVEN (7) DAYS PRIOR TO THE 28-DAY COMPRESSIVE STRENGTH TEST. DO NOT OVEN DRY THE SPECIMENS THAT ARE TO BE LOAD TESTED.

   (C) SPECIMENS MAY BE TESTED AT ANY AGE TO MONITOR THE COMPRESSIVE STRENGTH OF THE ENGINEERED FILL.

E. INSTALLATION

INSTALLATION OF THE ENGINEERED FILL SHALL BE IN ACCORDANCE WITH THE INSTALLATION PROCEDURES PROVIDED BY THE MATERIAL SUPPLIERS REPRESENTATIVE.

1. BEFORE PLACING THE ENGINEERED FILL, THE PLACEMENT AREA SHALL BE CLEANED OF ALL DEBRIS AND DIRT.

2. IMMEDIATELY PRIOR TO PLACEMENT OF THE ENGINEERED FILL THE AREA TO BE COVERED WITH THE ENGINEERED FILL SHALL BE FREE OF STANDING WATER.

3. INSTALLATION RESTRICTIONS WITH REGARD TO WEATHER CONDITIONS ARE AS FOLLOWS:

   (A) THE ENGINEERED FILL SHALL NOT BE PLACED WHEN THE AMBIENT TEMPERATURE IS LESS THAN 32 DEGREES F.

   (B) THE INSTALLATION PROCEDURES SHALL NOT BEGIN IF WEATHER FORECASTS PREDICT THAT TEMPERATURES WHICH ARE LESS THAN 32 DEGREES F MAY OCCUR WITHIN THE FIRST 8 HOUR TIME PERIOD STARTING FROM THE COMPLETION OF THE PLACEMENT OF THE ENGINEERED FILL.

   (C) THE MANUFACTURER SHALL TAKE PRECAUTION AS HE DEEMS APPROPRIATE TO AVOID SUBJECTING THE FRESHLY PLACED ENGINEERED FILL MATERIAL TO FREEZING TEMPERATURES. AT THE PROJECT ENGINEER'S REQUEST, THE MANUFACTURER SHALL SAMPLE THE IN-PLACE ENGINEERED FILL MATERIAL FOR LABORATORY TESTING TO VERIFY THAT FREEZING TEMPERATURES HAVE NOT DAMAGED THE QUALITY OF THE PRODUCT.

4. PLACEMENT

MIXING AND CONVEYING SHALL BE CONDUCTED ACCORDING TO THE FOLLOWING:

(A) THE JOB SITE PLACING EQUIPMENT FOR PROPORTIONING, MIXING AND PLACING THE ENGINEERED FILL SHALL BE APPROVED BY THE MANUFACTURER.

(B) MIXING OF THE MATERIALS SHALL BE IN ACCORDANCE WITH THE MANUFACTURERS MIX DESIGN PROCEDURES AND PROMPTLY AFTER MIXING THE MATERIALS THE ENGINEERED FILL SHALL BE CONVEYED TO THE FINAL POSITION.

(C) THE CONTRACTOR SHALL AVOID EXCESSIVE HANDLING OF THE ENGINEERED FILL.

(D) THE ENGINEERED FILL SHALL BE PLACED IN LIFTS AS RECOMMENDED BY THE MANUFACTURER.

(E) THE FINAL SURFACE FINISH SHALL BE WITHIN PLUS OR MINUS 0.1 FOOT OF PLAN ELEVATION.

(F) ANY LOADINGS TO BE APPLIED TO THE ENGINEERED FILL SHALL NOT BE PERMITTED UNTIL THE ENGINEERED FILL HAS ATTAINED A COMPRESSIVE STRENGTH OF AT LEAST 20 PSI.

GENERAL NOTES - STRUCTURES OVER 20-FT SPAN

F. ENGINEERED FILL REPORT

AFTER THE PLACEMENT OF THE REQUIRED ENGINEERED FILL AND PRIOR TO FINAL PAYMENT FOR THIS ITEM, THE SUBCONTRACTOR OR SUPPLIER SHALL FURNISH TO THE PROJECT ENGINEER SEVEN (7) COPIES OF THE ENGINEERED FILL REPORT. THE REPORT SHALL CONTAIN THE FOLLOWING INFORMATION:

1. A COPY OF THESE NOTES;
2. DOCUMENTATION OF ALL MATERIAL TESTING RESULTS;
3. THE SEQUENCE OF CONSTRUCTION PROCEDURES PRESENTED IN A DIARY FORMAT.
4. A DISCUSSION OF ALL CONSTRUCTION TECHNIQUES AND THE METHOD(S) OF DEALING WITH ANY CONSTRUCTION PROBLEMS THAT OCCURRED; AND
5. A PROJECT SUMMARY DISCUSSING THE PROJECT PLANS AND SPECIFICATIONS WITH REGARD TO THE CONTRACTOR'S RECOMMENDATIONS FOR CHANGES AND/OR IMPROVEMENTS.

THE REPORT SHALL BE PREPARED UNDER THE DIRECTION OF, AND SIGNED BY A REGISTERED PROFESSIONAL ENGINEER. THE SEVEN (7) REPORT COPIES SHALL BE DISTRIBUTED AS FOLLOWS: DISTRICT, CENTRAL OFFICE TEST LAB, CENTRAL OFFICE BUREAU OF BRIDGES, CENTRAL OFFICE PAVEMENT AND SOILS SECTION, FHWA, CENTRAL OFFICE BUREAU OF CONSTRUCTION, AND CUYAHOGA COUNTY ENGINEER.

G. METHOD OF MEASUREMENT

THE QUANTITY OF ENGINEERED FILL TO BE PAID FOR SHALL BE THE SATISFACTORILY INSTALLED CUBIC YARD VOLUME MEASURED IN PLACE AS DEFINED BY THE PLAN LIMITS UNLESS OTHERWISE APPROVED BY THE ENGINEER. THE QUANTITY SO MEASURED SHALL INCLUDE ALL LABOR MATERIALS, EQUIPMENT, AND INCIDENTALS NECESSARY TO COMPLETE THIS ITEM OF WORK.

H. BASIS OF PAYMENT

THE PAYMENT WILL BE MADE AT THE CONTRACT UNIT PRICE BID FOR:

ITEM	UNIT	DESCRIPTION
SPECIAL	CU. YD.	ENGINEERED FILL

53. ITEM SPECIAL - PROTECTION AND SUPPORT MODIFICATIONS FOR EXISTING CPP ELECTRIC LINES

A. DESCRIPTION

THIS WORK SHALL INCLUDE THE COMPLETE PROTECTION, TEMPORARY SHORING, REMOVING EXISTING SUPPORTS, AND PROVIDING PERMANENT SUPPORTS FOR THE EXISTING PRESSURIZED OIL FILLED 69 AND 138 KV CPP ELECTRIC LINES.

B. MATERIALS

CONCRETE - CLASS C IN ACCORDANCE WITH ITEM 511

REINFORCING STEEL - EPOXY COATED IN ACCORDANCE WITH ITEM 509.

STRUCTURAL STEEL - ASTM A36

C. REQUIREMENTS

THE ELECTRIC LINES MUST BE MAINTAINED IN SERVICE AT ALL TIMES. IF A LEAK OCCURS IN A LINE DUE TO A NON-CONSTRUCTION RELATED PROBLEM, CPP MUST BE NOTIFIED IMMEDIATELY AND THE CONTRACTOR SHALL PROVIDE SAFE ACCESS FOR CPP PERSONNEL AND EQUIPMENT FOR A DISTANCE OF FIFTEEN (15) FEET EITHER SIDE OF THE LEAK. THIS ACCESS MUST BE PROVIDED WITHIN TWENTY-FOUR (24) HOURS FROM THE TIME OF DISCOVERY OF THE LEAK. THE CONTRACTOR SHALL PROVIDE ALL LABOR, MATERIALS AND EQUIPMENT NECESSARY TO COMPLETELY PROTECT THE ELECTRIC LINES AGAINST DAMAGE FROM CONSTRUCTION OPERATIONS. THE CONTRACTOR SHALL ASSUME FULL RESPONSIBILITY FOR ANY CONSTRUCTION RELATED DAMAGE TO THE ELECTRIC LINES OR FOR DAMAGES RESULTING FROM DAMAGE TO THESE LINES.

PRIOR TO COMMENCING ANY CONSTRUCTION OPERATIONS WHICH WOULD AFFECT THE LINES, THE CONTRACTOR SHALL OBTAIN AND FURNISH TO THE ENGINEER SURVEY ELEVATIONS AND HORIZONTAL ALIGNMENT OF THE LINES AT ALL EXISTING POINTS OF SUPPORT.

THE CONTRACTOR SHALL PROVIDE TEMPORARY SUPPORTS FOR THE LINES IN CLOSE PROXIMITY WITH ALL EXISTING SUPPORTS WHICH MUST BE TEMPORARILY DISCONNECTED OR REMOVED FOR PATCHING OR REPLACEMENT OPERATIONS. EXISTING SHEET METAL COVERS SHALL BE REMOVED AND REINSTALLED AS REQUIRED. THE TEMPORARY SUPPORTS MUST MAINTAIN THE RELATIVE ALIGNMENT AND PROFILE OF THE LINES WITHIN PLUS OR MINUS 1/4 INCH OF THE ORIGINAL RELATIVE DIMENSIONS BETWEEN SUPPORTS. THE ENGINEER MAY REQUEST THAT THE CONTRACTOR CHECK THE ALIGNMENT AND PROFILE AT ANY TIME TO ENSURE THAT THIS REQUIREMENT IS BEING MET. IF THE GEOMETRY IS OUT OF TOLERANCE, THE CONTRACTOR SHALL ADJUST THE TEMPORARY SUPPORT(S) IMMEDIATELY TO BE WITHIN TOLERANCE.

AFTER TEMPORARY SUPPORTS HAVE BEEN INSTALLED TO THE SATISFACTION OF THE ENGINEER, THE EXISTING SUPPORTS SHALL BE REMOVED IN ACCORDANCE WITH 202. EXISTING STEEL HANGER SUPPORTS WHICH ARE TO BE REINSTALLED SHALL BE STORED AND PROTECTED FROM DAMAGE DURING CONSTRUCTION.

NEW PERMANENT SUPPORTS FOR THE LINES SHALL BE CONSTRUCTED IN THE SAME RELATIVE POSITIONS AS THE SUPPORTS WHICH WERE REMOVED. THE SUPPORTS SHALL BE IN ACCORDANCE WITH PLAN DETAILS AND AS SPECIFIED HEREIN, AND SHALL BE CONSTRUCTED SUCH THAT THE RELATIVE GEOMETRY OF THE LINES IN THE FINAL POSITION IS WITHIN THE TOLERANCE SPECIFIED HEREIN.

AFTER ALL CONSTRUCTION IS COMPLETED WHICH WOULD AFFECT THE LINES, THE CONTRACTOR SHALL RESURVEY THE ALIGNMENT AND PROFILE AT THE SAME POINTS SURVEYED PRIOR TO CONSTRUCTION AND FURNISH THE NEW DATA TO THE ENGINEER. ANY LOCATIONS WHICH ARE DETERMINED TO BE OUT OF TOLERANCE SHALL BE REPAIRED TO THE SATISFACTION OF THE ENGINEER.

D. PAYMENT

THIS WORK WILL BE PAID FOR AT THE CONTRACT LUMP SUM PRICE BID, WHICH PRICE AND PAYMENT SHALL BE FULL COMPENSATION FOR ALL LABOR, EQUIPMENT, MATERIALS AND INCIDENTALS NECESSARY TO COMPLETE THE WORK IN CONFORMANCE WITH THESE REQUIREMENTS, PLAN DETAILS AND TO THE SATISFACTION OF THE ENGINEER.

54. ITEM SPECIAL - PROTECTION AND SUPPORT MODIFICATIONS FOR EXISTING CENTER STREET SWING BRIDGE ELECTRIC CABLE

A. DESCRIPTION

THIS WORK SHALL INCLUDE THE COMPLETE PROTECTION, TEMPORARY SUPPORTING, REMOVING EXISTING SUPPORTS AND PROVIDING PERMANENT SUPPORTS FOR THE EXISTING CENTER STREET SWING BRIDGE ELECTRIC CABLE IN SPANS 3 AND 4.

B. REQUIREMENTS

THE ELECTRIC CABLE MUST BE MAINTAINED IN SERVICE AT ALL TIMES. THE CITY OF CLEVELAND SHALL BE PROVIDED SAFE ACCESS FOR REPAIRING THE CABLE IN THE EVENT OF A NON-CONSTRUCTION RELATED PROBLEM. THE ACCESS MUST BE PROVIDED WITHIN TWENTY-FOUR (24) HOURS FROM THE TIME OF THE CONTRACTOR'S NOTIFICATION OF THE PROBLEM.

THE CONTRACTOR SHALL PROVIDE ALL LABOR, MATERIALS AND EQUIPMENT NECESSARY TO COMPLETELY PROTECT THE ELECTRIC CABLE AGAINST DAMAGE FROM CONSTRUCTION OPERATIONS. THE CONTRACTOR SHALL ASSUME FULL RESPONSIBILITY FOR ANY CONSTRUCTION RELATED DAMAGE TO THE ELECTRIC LINE, OR FOR DAMAGES RESULTING FROM DAMAGE TO THE LINE. ANY CONSTRUCTION RELATED DAMAGE SHALL BE REPAIRED TO THE SATISFACTION OF THE ENGINEER IMMEDIATELY, AT THE CONTRACTOR'S EXPENSE.

THE CONTRACTOR SHALL TEMPORARILY SUPPORT THE AERIAL CABLE DURING RECONSTRUCTION OF PIER 2 AND FLOORBEAM 3, 1, AND REPLACEMENT OF THE ARCH BRACES AND STRINGERS ADJACENT TO TRUSS PANEL POINT 0'. NEW PERMANENT SUPPORTS SHALL BE CONSTRUCTED AT THE SAME RELATIVE POSITIONS AS THE SUPPORTS WHICH WERE REMOVED. THE SUPPORTS SHALL BE IN ACCORDANCE WITH PLAN DETAILS AND AS SPECIFIED HEREIN.

C. PAYMENT

THIS WORK WILL BE PAID FOR AT THE CONTRACT LUMP SUM PRICE BID, WHICH PRICE AND PAYMENT SHALL BE FULL COMPENSATION FOR ALL LABOR, EQUIPMENT, MATERIALS AND INCIDENTALS NECESSARY TO COMPLETE THE WORK IN CONFORMANCE WITH THESE REQUIREMENTS, PLAN DETAILS AND TO THE SATISFACTION OF THE ENGINEER.

55. CONSTRUCTION JOINT WATERPROOFING SYSTEM

A. DESCRIPTION

THE CONTRACTOR SHALL FURNISH, INSTALL, AND INJECT PERMEABLE GROUT TUBES AT CONSTRUCTION JOINTS IN THE ROOF SLABS OF THE WEST APPROACH TUNNELS AND STATION, AND THE ROOF SLAB OF THE EAST SUBWAY, TO PREVENT LEAKAGE THROUGH THE JOINTS.

B. QUALITY ASSURANCE

COMPONENTS AND INSTALLATION PROCEDURES SHALL BE IN ACCORDANCE WITH MANUFACTURER'S PRINTED SPECIFICATIONS AND RECOMMENDATIONS. INITIAL INSTALLATION OF GROUT TUBES SHALL BE DONE UNDER SUPERVISION OF AN APPROVED MANUFACTURER'S REPRESENTATIVE. INJECTION OF SEALING MATERIAL SHALL BE DONE BY A MANUFACTURER'S LICENSED APPLICATOR.

C. DELIVERY, STORAGE, AND HANDLING

DELIVER MATERIALS IN ORIGINAL, TIGHTLY SEALED CONTAINERS, OR UNOPENED PACKAGES WITH MANUFACTURER'S NAME, LABELS, AND PRODUCT IDENTIFICATION. STORE ALL MATERIALS IN A SECURE, DRY AREA UNTIL INSTALLED.

A SUFFICIENT QUANTITY OF GROUT TUBES AND SEALING MATERIAL SHALL BE STORED ON SITE OR BE READILY AVAILABLE PRIOR TO STARTING THE WORK TO INSURE THAT THE WORK WILL BE CONTINUOUS FROM START TO COMPLETION WITHOUT DELAY DUE TO MATERIAL SHORTAGE OR UNAVAILABILITY.

D. MATERIALS

PERMEABLE GROUT TUBES SHALL BE INJECTO® SYSTEM AS AVAILABLE FROM DE NEEF CONSTRUCTION CHEMICALS (US) INC. OF WALLER, TX, PHONE NO. (409) 372-9185 OR FUKO® INJECTION SYSTEM AS AVAILABLE FROM ABSOLUTE WATERPROOFING SYSTEMS, INC. OF GREENWICH, CT, PHONE NO. (203) 622-7333. SEALING MATERIAL SHALL BE A HYDROPHOBIC POLYMER OF THE ISOCYANATE TYPE WHICH IS INSTALLED BY INJECTION. THE UNCURED POLYURETHANE GROUT SHALL HAVE A VISCOSITY OF 650 + 200 CPS (AT 68°F) AND BE 100% SOLIDS. WHEN THE SEALING MATERIAL IS MIXED WITH APPROXIMATELY 10% WATER, THE SEALING MATERIAL SHALL EXPAND AND CURE TO A CLOSED CELL FOAM WITH A TENSILE STRENGTH OF 150 (ASTM D-412) PSI AND 250% ELONGATION (ASTM-3574).

GENERAL NOTES - STRUCTURES OVER 20-FT SPAN

THE SEALING MATERIAL SHALL HAVE THE ABILITY TO REACT IN MOVING WATER AND THE VISCOSITY WILL REMAIN THE SAME UNTIL GELATION OCCURS.

THE CURED SEALING MATERIAL WILL BE RESISTANT TO MOST ORGANIC CHEMICALS, MILD ACIDS, ALKALI, MICRO - ORGANISMS AND BE ESSENTIALLY NON-TOXIC.

E. SURFACE PREPARATION

CLEAN CONCRETE SURFACE OF DIRT, LAITANCE, CORROSION, OR OTHER CONTAMINATION PRIOR TO INSTALLATION OF THE GROUT TUBES TO INSURE DIRECT CONTACT OF THE GROUT TUBES WITH THE CONCRETE SURFACE.

F. INSTALLATION OF GROUT TUBES

GROUT TUBES SHALL BE FASTENED TO CLEAN CONCRETE SURFACE EVERY 12 INCHES (SEE DRAWING FOR LOCATION IN CONSTRUCTION JOINT). THE PLASTIC ENDS WILL BE BENT SO THAT THEY WILL PROTRUDE THROUGH OR UNDER THE FORMS. EACH END OF THE GROUT TUBE SHALL CROSS THE NEXT ONE SO THAT THERE WILL BE NO DEFAULT IN THE INJECTED ZONE.

G. AFTER THE CONCRETE HAS CURED, THE GROUT TUBES SHALL BE INJECTED WITH THE SEALING MATERIAL TO FILL THE CONSTRUCTION JOINT AND ANY HONEYCOMBS.

PRIOR TO INJECTION OF THE SEALING MATERIAL, WATER SHALL BE INJECTED INTO ONE END IN ORDER TO PROVIDE WATER FOR THE REACTION PROCESS AND TO VERIFY CONTINUITY BETWEEN ENDS. WATER SHALL BE INJECTED INTO ONE END UNTIL IT BEGINS TO FLOW FROM OTHER END OF GROUT TUBE. IF EXCESSIVE AMOUNT OF WATER NEEDS TO BE INJECTED OR A BLOCKAGE IS ENCOUNTERED, THE LOCATION NEEDS TO BE MARKED. THIS MARKING WILL INFLUENCE THE INJECTION PROCEDURE.
START THE INJECTION OF THE SEALING MATERIAL AT ONE END OF THE GROUT TUBE (PRESSURE OF APPROXIMATELY 200 PSI). AS SOON AS SEALING MATERIAL APPEARS AT THE OTHER END, CLOSE THE OTHER END AND INCREASE PUMP PRESSURE (TO APPROXIMATELY 250 PSI). STOP INJECTION WHEN SEALING MATERIAL PERCOLATES OUT OF A JOINT OR A SUBSTANTIAL BACKPRESSURE IS BUILT. PATCH INJECTION ENDS WITH CEMENTITIOUS MORTAR.

H. PAYMENT

CONSTRUCTION JOINT WATERPROOFING SYSTEM WILL NOT BE PAID FOR SEPARATELY, BUT THE COST SHALL BE INCLUDED WITH THE APPROPRIATE CONCRETE PAY ITEM.

56. ITEM SPECIAL - CONCRETE REPAIR BY EPOXY INJECTION

A CONTINGENCY QUANTITY OF 2,500 LIN. FT. IS INCLUDED WITH THIS ITEM TO BE USED AS DIRECTED BY THE ENGINEER FOR ADDITIONAL CRACK REPAIRS DETERMINED TO BE REQUIRED DURING CONSTRUCTION. THIS QUANTITY IS LISTED IN THE "GENERAL" COLUMN OF THE ESTIMATED QUANTITIES TABLE.

57. ITEM SPECIAL - PROTECTION AND SUPPORT MODIFICATIONS FOR EXISTING AMERITECH COMMUNICATIONS DUCTS

A. DESCRIPTION

THIS WORK SHALL INCLUDE REMOVING AND INSTALLING MANHOLE CASTINGS AND THE COMPLETE PROTECTION, TEMPORARY SHORING, REMOVING EXISTING SUPPORTS AND PROVIDING PERMANENT SUPPORTS FOR THE EXISTING AMERITECH COMMUNICATIONS (NOTED AS O.B.T. IN THE PLANS) DUCTS AND MANHOLE CHAMBERS.

B. MATERIALS

ALL STRUCTURAL STEEL FOR SUPPORTS SHALL BE ASTM A36, GALVANIZED IN ACCORDANCE WITH 711.02.

C. REQUIREMENTS

THE COMMUNICATIONS DUCTS MUST BE MAINTAINED IN SERVICE AT ALL TIMES. AMERITECH SHALL BE PROVIDED SAFE ACCESS FOR REPAIRING THE DUCTS IN THE EVENT OF A NON-CONSTRUCTION RELATED PROBLEM. THE ACCESS MUST BE PROVIDED WITHIN TWENTY FOUR (24) HOURS FROM THE TIME OF THE CONTRACTOR'S NOTIFICATION OF THE PROBLEM.

THE CONTRACTOR SHALL PROVIDE ALL LABOR, MATERIALS AND EQUIPMENT NECESSARY TO COMPLETELY PROTECT THE COMMUNICATIONS DUCTS AGAINST DAMAGE FROM CONSTRUCTION OPERATIONS. THE CONTRACTOR SHALL ASSUME FULL RESPONSIBILITY FOR ANY CONSTRUCTION RELATED DAMAGE TO THE DUCTS, OR FOR DAMAGES RESULTING FROM DAMAGE TO THE DUCTS. ANY CONSTRUCTION RELATED DAMAGE TO THE DUCTS OR MANHOLE CHAMBERS SHALL BE REPAIRED IMMEDIATELY BY AMERITECH, AT THE CONTRACTOR'S EXPENSE.

PRIOR TO COMMENCING ANY CONSTRUCTION OPERATIONS WHICH WOULD AFFECT THE DUCTS AND MANHOLE CHAMBERS, THE CONTRACTOR SHALL OBTAIN AND FURNISH TO THE ENGINEER SURVEY ELEVATIONS AND HORIZONTAL ALIGNMENT OF THE DUCTS AT ALL EXISTING POINTS OF SUPPORT.

DURING ROOF SLAB, DECK AND SIDEWALK REMOVAL THE CONTRACTOR SHALL CAREFULLY REMOVE FOUR (4) EXISTING MANHOLE COVERS AND CASTINGS AND STORE THEM FOR REINSTALLATION.

THE CONTRACTOR SHALL PROVIDE TEMPORARY SUPPORTS FOR THE DUCTS AND MANHOLE CHAMBERS IN CLOSE PROXIMITY WITH ALL EXISTING SUPPORTS WHICH MUST BE TEMPORARILY DISCONNECTED OR REMOVED FOR PATCHING OR REPLACEMENT OPERATIONS. THE TEMPORARY SUPPORTS MUST MAINTAIN THE RELATIVE ALIGNMENT AND PROFILE OF THE DUCTS WITHIN PLUS OR MINUS 1/4 INCH OF THE ORIGINAL RELATIVE DIMENSIONS BETWEEN SUPPORTS. THE ENGINEER MAY REQUEST THAT THE CONTRACTOR CHECK THE ALIGNMENT AND PROFILE AT ANY TIME TO ENSURE THAT THIS REQUIREMENT IS BEING MET. IF THE GEOMETRY IS OUT OF TOLERANCE, THE CONTRACTOR SHALL ADJUST THE TEMPORARY SUPPORT(S) IMMEDIATELY TO BE WITHIN TOLERANCE.

AFTER TEMPORARY SUPPORTS HAVE BEEN INSTALLED TO THE SATISFACTION OF THE ENGINEER, THE EXISTING SUPPORTS SHALL BE REMOVED AND DISPOSED OF, OR STORED IF INDICATED IN THE PLANS FOR REINSTALLATION. SUPPORTS WHICH ARE TO BE REINSTALLED SHALL BE PROTECTED FROM DAMAGE DURING CONSTRUCTION. NEW PERMANENT SUPPORTS OR REUSED EXISTING SUPPORTS SHALL BE INSTALLED IN THE SAME RELATIVE POSITIONS AS THE SUPPORTS WHICH WERE REMOVED. THE DUCT SUPPORTS, MANHOLE CHAMBER SUPPORTS AND MANHOLE ASSEMBLIES SHALL BE INSTALLED IN ACCORDANCE WITH PLAN DETAILS AND AS SPECIFIED HEREIN. THE RELATIVE GEOMETRY OF THE DUCTS IN THE FINAL POSITION SHALL BE WITHIN THE TOLERANCE SPECIFIED HEREIN.

AFTER ALL CONSTRUCTION IS COMPLETED WHICH WOULD AFFECT THE DUCTS, THE CONTRACTOR SHALL RESURVEY THE ALIGNMENT AND PROFILE AT THE SAME POINTS SURVEYED PRIOR TO CONSTRUCTION AND FURNISH THE NEW DATA TO THE ENGINEER. ANY LOCATIONS WHICH ARE DETERMINED TO BE OUT OF TOLERANCE SHALL BE REPAIRED TO THE SATISFACTION OF THE ENGINEER.

D. PAYMENT

THIS WORK WILL BE PAID FOR AT THE CONTRACT LUMP SUM PRICE BID, WHICH PRICE AND PAYMENT SHALL BE FULL COMPENSATION FOR ALL LABOR, EQUIPMENT, MATERIALS AND INCIDENTALS NECESSARY TO COMPLETE THE WORK IN CONFORMANCE WITH THESE REQUIREMENTS, PLAN DETAILS AND TO THE SATISFACTION OF THE ENGINEER.

58. MEMBERS FABRICATED UNDER ITEMS 516 AND 518

ALL 516 OR 518 ITEMS EXCEPT ITEM 516, BEARING DEVICES, SHALL MEET THE REQUIREMENTS OF THEIR SPECIFIC SECTION OF THE CONSTRUCTION AND MATERIAL SPECIFICATIONS WITH THE FOLLOWING MODIFICATIONS:

THE CONTRACTOR SHALL SUBMIT A LETTER OF REQUEST FOR FABRICATOR APPROVAL DIRECTLY TO:

STRUCTURAL STEEL ENGINEER
BUREAU OF BRIDGES
OHIO DEPARTMENT OF TRANSPORTATION
25 SOUTH FRONT STREET
COLUMBUS, OHIO 43215

THE STRUCTURAL STEEL ENGINEER SHALL BE RESPONSIBLE FOR APPROVAL OF THE FABRICATOR BASED ON SPECIFICATION REQUIREMENTS. COPIES OF THE LETTER OF APPROVAL SHALL BE FORWARDED TO THE PROJECT ENGINEER, DISTRICT CONSTRUCTION ENGINEER, CENTRAL OFFICE CONSTRUCTION ENGINEER AND THE CONTRACTOR.

SUBMITTAL, CHECKING, REVIEW AND APPROVAL OF THE FABRICATOR'S SHOP DRAWINGS ARE NOT REQUIRED PRIOR TO FABRICATION. FABRICATION OF THE STEEL COMMENCES ANYTIME AFTER APPROVAL OF THE FABRICATOR.

518 ITEMS DO NOT REQUIRE INSPECTION AT THE APPROVED FABRICATOR'S SHOP. THE APPROVED FABRICATOR OF ANY 516 ITEMS SHALL NOTIFY THE PROJECT ENGINEER WHEN FABRICATION IS COMPLETE AND READY FOR INSPECTION. THE PROJECT ENGINEER WILL SCHEDULE THE INSPECTION AND NOTIFY THE FABRICATOR BASED ON THE FOLLOWING CRITERIA:

FABRICATOR'S PHYSICAL DISTANCE FROM CLEVELAND, OHIO	NUMBER OF WORK DAYS UNTIL INSPECTION
0 - 150 MILES	0 TO 3 DAYS
150 - 300 MILES	0 TO 4 DAYS
300+ MILES	0 TO 5 DAYS

ODOT INSPECTION WILL BE PERFORMED BASED ON TWO (2) SETS OF THE FABRICATOR'S SHOP DRAWINGS, SUPPLIED TO THE INSPECTOR.

FABRICATED MATERIAL SHIPPED TO THE JOB SITE SHALL BE ACCOMPANIED BY A COMPLETE SET OF SHOP DRAWINGS AND A LETTER OF CERTIFICATION, IN A FORMAT APPROVED BY ODOT, STATING ALL MATERIALS CONFORM TO CONTRACT REQUIREMENTS. FOR ALL FABRICATED STEEL, TEST DATA, MILL SHIPPING NOTICES AND INVOICES, AS PER 501.07, COMPLETE TRACEABILITY TO THE PRODUCING MILL AND PROOF OF DOMESTIC ORIGIN, AS PER ORC 153.011, SHALL BE RETAINED BY THE FABRICATOR, PER PROJECT, FOR A PERIOD OF THREE (3) YEARS TO SUPPORT THE LETTER OF CERTIFICATION.

FINAL ACCEPTANCE OF ALL FABRICATED MATERIALS UNDER THIS PROPOSAL WILL BE BASED ON THE ENGINEER'S APPROVAL THAT THE FABRICATED ITEMS BOTH CONFORM TO THE SHOP DRAWINGS AND CAN BE PROPERLY INCORPORATED INTO THE WORK.

AFTER COMPLETION OF THE FABRICATION AND APPROVAL PROCESS THE CONTRACTOR IS RESPONSIBLE FOR SUBMITTAL OF MICROFILMED "AS BUILT" SHOP DRAWINGS AS PER 501.05.

59. ITEM SPECIAL - FIBERGLASS GRATING

A. DESCRIPTION

THIS ITEM SHALL CONSIST OF FURNISHING AND INSTALLING FIBERGLASS GRATING IN ACCORDANCE WITH THESE SPECIFICATIONS AND WITHIN REASONABLY CLOSE CONFORMITY TO THE LINES, GRADES, LOCATIONS, DETAILS AND NOTES SHOWN ON THE PLANS.

THE FIBERGLASS SHALL BE DESIGNED TO SUPPORT A UNIFORM LOADING OF 85 POUNDS PER SQUARE FOOT. THE MAXIMUM DEFLECTION OVER A 4-FOOT SPAN SHALL NOT EXCEED 1/8 INCH.

B. REQUIREMENTS

GRATING PANELS SHALL BE MADE OF 1-1/2 INCH DEEP PULTRUDED FIBERGLASS I BARS. THE BEARING BARS SHALL

GENERAL NOTES - STRUCTURES OVER 20-FT SPAN

FHWA REGION	STATE	PROJECT	
5	OHIO		

150/412

CUYAHOGA COUNTY
CUY - 6 - 14.99

BE SPACED ON 1 INCH ON CENTER. RESIN SHALL BE FIRE RETARDANT POLYESTER MEETING THE REQUIREMENTS OF CLASS 1 RATING OF 25 OR LESS PER ASTM E-84 AND MEETS THE SELF EXTINGUISHING REQUIREMENTS OF ASTM D-635. COLOR SHALL BE GRAY. RESIN SHALL BE UV INHIBITED AND THE COMPOSITE SHALL INCLUDE A VEIL ON ALL EXPOSED SURFACES. PANELS SHALL BE ASSEMBLED USING A 3 PIECE PULTRUDED CROSS ROD SYSTEM.

THE CROSS RODS SHALL CONSIST OF A CENTER CORE WEDGE AND 2 SPACER BARS THAT ARE NOTCHED AT EACH BEARING BAR SO THAT EACH BEARING BAR IS BOTH MECHANICALLY LOCKED AND BONDED TO THE WEB OF EACH BEARING BAR. THE SPACER BARS SHALL BE CONTINUALLY BONDED TO THE CENTER CORE WEDGE. THE CROSS RODS SHALL BE SPACED A MAXIMUM OF 6 INCHES IN THE PANEL. THE TOP OF THE GRATING PANELS SHALL BE COVERED WITH A SANDED GRIT, BAKED EPOXY, ANTI-SKID SURFACE.

IT IS ANTICIPATED THAT THE PANELS ADJACENT TO THE CPP 69 AND 138 KV ELECTRIC LINES WILL REQUIRE MULTIPLE LONGITUDINAL SECTIONS, DUE TO THE SUPPORT DETAILS OF THE ELECTRIC LINES. THESE SECTIONS SHALL BE TRANSVERSELY SPLICED SO AS TO MAKE THE GRATING PANEL ACT AS A COMPOSITE UNIT.

C. CONSTRUCTION

THE CONTRACTOR SHALL FURNISH SHOP DRAWINGS IN CONFORMANCE WITH THE REQUIREMENTS OF ITEM 513, STRUCTURAL STEEL (AISC CATEGORY I), AS PER PLAN. THE SHOP DRAWINGS SHALL INDICATE ALL MATERIAL SPECIFICATIONS AND DIMENSIONS AND ANY ADDITIONAL DETAILS NOT SHOWN ON THE PLANS. APPROVAL OF THE SHOP DRAWINGS SHALL BE REQUIRED PRIOR TO FABRICATION AND INSTALLATION OF THE FIBERGLASS GRATING.

A REPRESENTATIVE OF THE DECK MANUFACTURER SHALL BE PRESENT PRIOR TO AND DURING THE INITIAL DECK INSTALLATION TO FURNISH TECHNICAL ASSISTANCE AND GUIDANCE TO THE CONTRACTOR AND ENGINEER. HE SHALL REMAIN ON THE PROJECT UNTIL HE IS ASSURED THAT THE INSTALLATION OF THE GRATING IS BEING ACCOMPLISHED TO HIS SATISFACTION. WHERE SPECIFIC INSTRUCTIONS ARE NOT CONTAINED HEREIN, DIRECTION FOR THE INSTALLATION SHALL BE ACCORDING TO THE MANUFACTURER'S RECOMMENDATIONS.

ALL FIELD CUT AND DRILLED EDGES, HOLES AND ABRASIONS SHALL BE SEALED WITH A CATALYZED RESIN COMPATIBLE WITH THE ORIGINAL RESIN AS RECOMMENDED BY THE MANUFACTURER. THE SEALING OF THE EDGES SHALL PREVENT PREMATURE FRAYING AT THE FIELD CUT EDGES.

THE CONTRACTOR SHALL BE RESPONSIBLE FOR NOTIFYING THE MANUFACTURER'S REPRESENTATIVE OF THE DATE OF THE DECK INSTALLATION AND HE SHALL COORDINATE THE WORK AS NECESSARY TO ENSURE THAT THIS REPRESENTATIVE WILL BE AT THE SITE TO GIVE DIRECTION FOR THIS PHASE OF THE WORK.

THE NEW GRATING SHALL BE PLACED INTO POSITION AND SECURELY FASTENED TO THE FLOOR FRAMING MEMBERS. PLACEMENT SHALL BE IN ACCORDANCE WITH DECK REMOVAL AND REPLACEMENT SEQUENCE - SPAN 4, AS SPECIFIED IN GENERAL NOTE 34.

D. METHOD OF MEASUREMENT

THIS WORK WILL BE MEASURED AS THE SQUARE FEET OF FIBERGLASS GRATING ACCEPTABLY INSTALLED IN PLACE.

THE QUANTITY SO MEASURED SHALL INCLUDE ALL LABOR, MATERIALS, EQUIPMENT AND INCIDENTALS NECESSARY TO SATISFACTORILY PERFORM THIS WORK.

E. PAYMENT

PAYMENT WILL BE MADE AT THE CONTRACT UNIT PRICE BID FOR:

ITEM	UNIT	DESCRIPTION
SPECIAL	SQ. FT.	FIBERGLASS GRATING

60. ITEM SPECIAL - PACK RUST REPAIR AND CAULKING

THIS ITEM SHALL INCLUDE THE REPAIR OF PACK RUSTED AREAS AND THE CAULKING OF JOINTS BETWEEN ADJACENT STEEL PIECES AT LOCATIONS AS DIRECTED BY THE ENGINEER.

ABRASIVE BLASTING ACCORDING TO THE OZEU SPECIFICATION SHALL BE PERFORMED BEFORE COMMENCING REPAIR OF PACK RUSTED AREAS OR CAULKING.

JOINTS THAT HAVE PACK RUST SHALL RECEIVE PREPARATION IN ADDITION TO THE ABRASIVE BLAST REQUIRED BY THE OZEU SPECIFICATION. PACK RUSTED JOINTS ARE DEFINED AS JOINTS WHERE THE ADJACENT STEEL PLATES ARE RUSTED APART MORE THAN 1/8" (ONE-EIGHTH INCH).

PACK RUST SHALL BE REMOVED FROM THE JOINTS BY CHIPPING, HAMMERING, PUNCHING, CHISELING OR BY OTHER SUITABLE MEANS TO A DEPTH AT LEAST EQUAL TO THE WIDTH OF THE GAP. THE REMAINING SURFACES SHALL BE CLEANED BY ABRASIVE BLASTING. ALL JOINTS SHALL THEN BE VACUUMED WITH A COMMERCIAL VACUUM CLEANER HAVING A NOZZLE OPENING OF 1" TO 1-1/2".

THE CAULKING SHALL BE APPLIED EVENLY TO THE AREAS. VOIDS SHALL BE COMPLETELY FILLED WITH CAULKING WHICH SHALL BE APPLIED BY TROWEL OR CAULKING GUN AND SHALL BE SPREAD SMOOTHLY USING HEAVY PRESSURE TO DISPLACE AIR BUBBLES. EXCESS MATERIAL SHALL BE REMOVED IMMEDIATELY.

THE MATERIAL SHALL BE ONE OF THE FOLLOWING:

	MANUFACTURER
MARK 270	KOP-COAT A-788
POLY-CARB	SPLASH ZONE COMPOUND
SOLON, OH	HAMILTON, OH
216-248-1223	513-896-1919
SIKADUR INJECTIONGEL	OR OTHER TWO COMPONENT
SIKA CHEMICAL CORP.	100% SOLID, NON-SAG,
LYNDHURST, NJ	NON-SHRINK EPOXY
201-933-8801	BASED SYSTEM CAPABLE OF FILLING VOIDS UP TO 1" WIDE

THE COST OF ALL LABOR, MATERIALS AND EQUIPMENT NECESSARY FOR THE REMOVAL OF THE PACK RUST AND FURNISHING AND INSTALLATION OF THE CAULKING SHALL BE INCLUDED FOR PAYMENT IN THE BID PRICE PER LINEAR FOOT FOR PACK RUST REPAIR AND CAULKING.

PAYMENT FOR COMPLETE IN PLACE AND ACCEPTED QUANTITIES OF PACK RUST REPAIR AND CAULKING SHALL BE MADE UNDER:

ITEM	UNIT	DESCRIPTION
SPECIAL	LIN. FT.	PACK RUST REPAIR AND CAULKING

61. POURED POLYURETHANE JOINT SEAL

THE EXPANSION JOINTS AT THE WEST 25TH STREET TUNNEL, DETROIT AVENUE TUNNEL, WEST SIDE STATION AT JOINT 20-21 AND EAST SIDE STATION AT FLOORBEAM E.S. 21 SHALL BE SEALED USING A POURED POLYURETHANE JOINT SEALANT, AS SHOWN IN THE PLANS.

THE MATERIAL SHALL BE A TWO-PART, COLD APPLIED CHEMICALLY CURING, SELF LEVELING, ELASTOMERIC POLYURETHANE JOINT SEALANT MEETING THE REQUIREMENTS OF FEDERAL SPECIFICATION TT-S-00227E AND ASTM C-920. ALL MATERIALS SHALL BE STORED AND INCORPORATED IN THE WORK AS SPECIFIED BY THE MANUFACTURER.

NO SEPARATE PAYMENT WILL BE MADE FOR THE JOINT SEAL, PAYMENT SHALL BE INCLUDED WITH THE APPROPRIATE ITEM 511.

62. ITEM SPECIAL - SEALING OF CONCRETE WEARING SURFACES (NON-EPOXY)

A. DESCRIPTION

THIS ITEM SHALL CONSIST OF THE NECESSARY LABOR, MATERIALS AND EQUIPMENT TO PREPARE AND TREAT PORTLAND CEMENT CONCRETE SURFACES WITH AN APPROVED SEALER IN ACCORDANCE WITH THESE SPECIFICATIONS, AS FOLLOWS:

1. ENTIRE UPPER DECK SURFACE FROM FLOORBEAM 1A, 1A (STA. 103+94.94) TO FLOORBEAM E.S., 21 (STA. 130+92.24)
2. TOPS OF SIDEWALKS FROM STA. 101+77.84 TO STA. 131+31.83 ON THE SOUTH SIDE AND FROM STA. 102+41.85 TO STA. 130+92.24 ON THE NORTH SIDE.
3. TOPS OF ISLANDS AT PIER 3, PIER 4 AND SPAN 4.

B. MATERIALS

THE MATERIALS SHALL MEET THE FOLLOWING PERFORMANCE REQUIREMENTS:

1. ABSORPTION - THE ABSORPTION OF TREATED CONCRETE UNDER TOTAL IMMERSION SHALL NOT EXCEED 1.0% AFTER 48 HOURS OR 2.0% AFTER 50 DAYS (ASTM C642, NON-AIR ENTRAINED CONCRETE).
2. SCALING RESISTANCE - TREATED CONCRETE SHALL PASS ASTM C672; SCALING RESISTANCE TEST WITH A RATING OF "NO SCALING" AFTER 100 CYCLES (NON-AIR ENTRAINED CONCRETE) AS COMPARED TO "SEVERE SCALING" ON UNTREATED CONCRETE). CONCRETE SHOULD BE PROPORTIONED AND MIXED IN ACCORDANCE WITH ASTM C642.
3. NCHRP 244, SERIES II - CUBE TEST
   - 3.1 WEIGHT GAIN - NOT TO EXCEED 25% OF UNTREATED CUBE.
   - 3.2 ABSORBED CHLORIDE - NOT TO EXCEED 25% OF UNTREATED CUBE.
4. NCHRP 244, SERIES IV - SOUTHERN EXPOSURE
   - 4.1 ABSORBED CHLORIDE - NOT TO EXCEED 10% OF UNTREATED CONCRETE.
5. SKID RESISTANCE - WHEN USED ON THE BRIDGE DECK AND APPROACH SLABS, CERTIFICATION IS TO BE PROVIDED INDICATING NO REDUCTION IN SKID RESISTANCE FROM UNTREATED CONCRETE.
6. WATERPROOFING AFTER ABRASION - COMPLIANCE IS REQUIRED WITH ALBERTA TRANSPORTATION AND UTILITIES SPECIFICATIONS B 388-90 FRO SEALER TYPE 1B.
7. WEATHERPROOFING MATERIAL IS TO BE OF LOW VOLATILE ORGANIC CONTENT THAT WILL BE LESS THAN 2.9 LBS. PER GALLON USING E.P.A. TEST METHOD 24.
8. POLYESTER RESIN SEALERS SHALL NOT BE USED.

PREQUALIFICATION OF MATERIAL REQUIRES THAT THE MANUFACTURER PROVIDE THE TEST DATA FROM AN APPROVED INDEPENDENT TESTING FACILITY; A ONE-QUART SAMPLE AND THE MSDS TO ODOT'S BUREAU OF TESTING. DRUMS OR CONTAINERS OF THE SEALER OR SEALER COMPONENTS SHALL BE DELIVERED TO THE JOB SITE UNOPENED AND WITH THE MANUFACTURER'S NUMBERED SEAL INTACT.

C. MANUFACTURER'S REPRESENTATIVE

THE CONTRACTOR SHALL GIVE THE MANUFACTURER'S TECHNICAL REPRESENTATIVE NOTICE OF THE INTENDED DATE OF APPLICATION. HE SHALL HAVE THE MANUFACTURER'S REPRESENTATIVE PRESENT DURING THE TESTING AND INITIAL INSTALLATION.

D. SURFACE CONDITION

SURFACES TO WHICH SEALERS ARE TO BE APPLIED SHALL BE DRY AND FREE FROM DUST, DIRT, OIL, WAX, CURING COMPOUNDS, EFFLORESCENCE, LAITANCE, COATINGS AND OTHER FOREIGN MATERIALS.

CAST-IN-PLACE CONCRETE SHALL BE IN PLACE AT LEAST THIRTY (30) DAYS AND HAVE AT LEAST FIVE (5) DAYS OF AIR DRYING BEFORE SEALING. CAVITIES WHICH REQUIRE GROUT FILLING SHALL HAVE BEEN FILLED, CURED AND AIR-DRIED FOR FIVE (5) DAYS.

COUNTY BRIDGE NO. 84

HOWARD NEEDLES TAMMEN & BERGENDOFF
ARCHITECTS ENGINEERS PLANNERS
HNTB

GENERAL NOTES
BR. NO. CUY - 6 - 1499
REHABILITATION OF
VETERANS MEMORIAL BRIDGE
(U.S. 6, 20, 42 & S.R. 3 OVER CUYAHOGA RIVER)
CLEVELAND CUYAHOGA COUNTY OHIO

DRAWN B.E.B.	TRACED B.F.	CHECKED A.D.Y.	REVIEWED C.A.B.	REVISED
DATE 3/22/94	DATE 3/28/94	DATE 3/30/94	DATE 3/31/94	SHEET 18A/270

GENERAL NOTES – STRUCTURES OVER 20-FT SPAN

FHWA REGION	STATE	PROJECT	
5	OHIO		

150A
412

CUYAHOGA COUNTY
CUY – 6 – 14.99

E. SURFACE PREPARATION

THE SURFACE SHALL BE THOROUGHLY CLEANED TO REMOVE DUST, DIRT, OIL, WAX, CURING COMPONENTS, EFFLORESCENCE, LAITANCE, COATINGS AND OTHER FOREIGN MATERIALS. THE USE OF CHEMICALS AND OTHER CLEANING COMPOUNDS TO FACILITATE THE REMOVAL OF THESE FOREIGN MATERIALS SHALL BE APPROVED BY THE SEALER MANUFACTURER OR IT'S REPRESENTATIVE BEFORE USE. THE SEALER SHALL BE APPLIED WITHIN 48 HOURS FOLLOWING SURFACE PREPARATION.

CLEANING EQUIPMENT SHALL BE FITTED WITH SUITABLE TRAPS, FILTERS, DRIP PANS AND OTHER DEVICES TO PREVENT OIL AND OTHER FOREIGN MATERIAL FROM BEING DEPOSITED ON THE SURFACE.

REQUIRED CLEANING METHODS FOR THE FOLLOWING CATEGORIES ARE:

1. NEW EXPOSED CONCRETE SURFACES WHICH ARE WATER CURED.

   a. A WATER BLAST AT 7,000 PSI MINIMUM.

2. NEW EXPOSED CONCRETE SURFACES WHERE CURING COMPOUNDS HAVE BEEN USED.

   a. A WATER BLAST AT 7,000 PSI MINIMUM OR

   b. A SANDBLAST FOLLOWED BY AIR BROOMING OR POWER SWEEPING TO REMOVE DUST AND SAND FROM THE SURFACES AND OPENED PORES.

F. APPLICATION

A NON-EPOXY SEALER SHALL BE APPLIED ACCORDING TO THE MANUFACTURER'S RECOMMENDED MODE OF APPLICATION AND UNDER THE OBSERVATION OF THE ENGINEER. WHEN SPRAY EQUIPMENT IS USED, THE SEALER SHALL BE SPRAYED ONTO CONCRETE SURFACES IN A ONE-PASS OPERATION. CLEAR NON-EPOXY SEALERS SHALL BE TINTED WITH A VANISHING DYE THAT DOES NOT DAMAGE THE CONCRETE.

1. DO NOT PROCEED WITH APPLICATION OF THE SEALER IF THE AMBIENT TEMPERATURE IS BELOW 40°F OR WHEN THE AMBIENT TEMPERATURE IS EXPECTED TO FALL BELOW 32°F WITHIN 12 HOURS AFTER APPLICATION.

2. DO NOT PROCEED WITH APPLICATION OF THE SEALER IF RAIN IS ANTICIPATED WITHIN TWO HOURS AFTER APPLICATION.

3. ON HORIZONTAL SURFACES, THE SEALER SHALL BE UNIFORMLY SPRAYED TO SATURATE/FLOOD THE SURFACE. PROPER QUANTITIES ARE BEING APPLIED WHEN THE SEALER STANDS FOR A FEW SECONDS BEFORE COMPLETELY PENETRATING.

   IF RECOMMENDED BY THE MANUFACTURER, THE SEALER SHALL BE BROOMED IN. ON SMOOTH-FINISH OR DENSE CONCRETE, ALL EXCESS MATERIAL SHALL BE SQUEEGEED OFF AFTER TEN MINUTES TO ASSURE THAT NO EXCESS SOLIDS REMAIN WHICH CAN CAUSE EXCESSIVE SLICKNESS.

G. TEST APPLICATION

PRIOR TO FINAL APPLICATION, THE CONTRACTOR SHALL APPLY SEALER TO MEASURED TEST COVERAGE AREAS FOR THE PURPOSE OF OBTAINING A VISUAL ILLUSTRATION OF THE ABSORPTION NECESSARY TO ACHIEVE THE SPECIFIED COVERAGE RATE FOR A NON-EPOXY SEALER. THE APPLICATOR SHALL USE AT LEAST 1/2 GALLON OF SEALER FOLLOWING THE MANUFACTURER'S RECOMMENDED METHOD OF APPLICATION FOR THE TOTAL OF THE TEST SURFACES. HORIZONTAL TEST SURFACES SHALL BE LOCATED ON THE DECK AND ON THE SIDEWALK.

H. COVERAGE

A MINIMUM OF ONE GALLON OF NON-EPOXY SEALER SHALL BE APPLIED FOR EACH 100 SQUARE FEET OF SURFACE.

I. APPEARANCE

THE SEALER SHALL RESULT IN A UNIFORM APPEARANCE.

J. TRAFFIC

TRAFFIC MAY BE ALLOWED ON THE DECK ONLY AFTER THE NON-EPOXY SEALER IS TOTALLY DRY.

K. PRECAUTIONS

PRECAUTIONS SHALL BE FOLLOWED AS INDICATED ON THE MANUFACTURER'S MSDS.

L. PROTECTION OF ADJOINING SURFACES AND THE PUBLIC

WHEN APPLYING A SEALER, THE CONTRACTOR SHALL PROTECT BY MASKING OFF OR BY OTHER MEANS ADJOINING SURFACES OF THE STRUCTURE WHICH ARE NOT TO BE SEALED.

ASPHALT AND MASTIC TYPE SURFACES SHALL BE PROTECTED FROM SPILLAGE AND HEAVY OVERSPRAY. THE SEALERS SHALL NOT COME IN CONTACT WITH JOINT SEALERS WHICH HAVE NOT BEEN ALLOWED TO CURE ACCORDING TO THE MANUFACTURER'S INSTRUCTIONS. JOINT SEALANTS AND TRAFFIC PAINTS MAY BE APPLIED TO THE TREATED SURFACES 48 HOURS AFTER THE SEALER HAS BEEN APPLIED. WHEN A SILOXANE SEALER IS APPLIED, THE ADJOINING AND NEARBY SURFACES OF STEEL, ALUMINUM OR GLASS SHALL BE COVERED WHERE THERE IS A POSSIBILITY OF SEALER BEING DEPOSITED ON THE SURFACES.

M. ENVIRONMENTAL REQUIREMENTS

PROTECT PLANTS AND VEGETATION FROM OVERSPRAY BY COVERING WITH DROP CLOTHS.

N. EQUIPMENT

WATER BLAST EQUIPMENT SHALL BE CAPABLE OF PROVIDING PRESSURES UP TO 7,000 PSI.

APPLICATION EQUIPMENT SHALL BE THAT WHICH IS RECOMMENDED BY THE SEALER MANUFACTURER. THE SPRAY EQUIPMENT, TANKS, HOSES, BROOMS, ROLLERS, COATERS, SQUEEGEES, ETC., SHALL BE THOROUGHLY CLEAN, FREE OF FOREIGN MATTER, OIL RESIDUE AND WATER PRIOR TO APPLYING THE CONCRETE SEALER.

O. MIXING

MIXING SHALL BE ACCORDING TO THE MANUFACTURER'S RECOMMENDED PROCEDURES. MATERIAL SHALL BE MIXED TO A UNIFORM CONSISTENCY WHICH SHALL BE MAINTAINED DURING APPLICATION.

P. STORAGE

SEALER COMPONENTS SHALL BE STORED IN TIGHTLY SEALED CONTAINERS IN A DRY LOCATION AND AS RECOMMENDED BY THE MANUFACTURER.

Q. METHOD OF MEASUREMENT

THE QUANTITY SHALL BE THE ACTUAL AREA IN SQUARE YARDS OF SURFACES SEALED AND SHALL INCLUDE SURFACE PREPARATION, MATERIAL, APPLICATION, AND PREQUALIFICATION TESTING COSTS.

R. BASIS OF PAYMENT

PAYMENT FOR COMPLETED WORK WILL BE MADE AT THE CONTRACT PRICE FOR:

ITEM	UNIT	DESCRIPTION
SPECIAL	SQ.YD.	SEALING OF CONCRETE WEARING SURFACES (NON-EPOXY)

63. ITEM SPECIAL - CLASS S LIGHTWEIGHT CONCRETE, SUPERSTRUCTURE

A. DESCRIPTION

THIS ITEM SHALL CONSIST OF FURNISHING AND PLACING PORTLAND CEMENT LIGHTWEIGHT CONCRETE FOR THE SUPERSTRUCTURE OF SPAN 4 IN ACCORDANCE WITH ALL PROVISIONS OF GENERAL NOTE 37, "ITEM SPECIAL - CLASS S LIGHTWEIGHT CONCRETE, SUPERSTRUCTURE (USING SHRINKAGE COMPENSATING CEMENT)" EXCEPT AS MODIFIED HEREIN.

B. MATERIALS

MATERIALS SHALL BE:

PORTLAND CEMENT - 701.04 TYPE II (ASTM C150)

CHEMICAL ADMIXTURE - 705.12, TYPE A OR TYPE D AS APPROVED BY THE ENGINEER

C. PROPORTIONING

SLUMP - 3 INCHES PLUS OR MINUS 1 INCH

WATER - CEMENT RATIO - 0.44 MAXIMUM, USING DAMP LIGHTWEIGHT AGGREGATES; 0.75 MAXIMUM, NET WATER INCLUDING THE ABSORBED WATER.

D. CONCRETE DELIVERY

DELETE THIS SECTION.

G. HANDLING OF AGGREGATES

THE TYPE A OR TYPE D ADMIXTURES SHALL BE ADDED TO THE MIX IN STRICT ACCORDANCE WITH THE MANUFACTURER'S RECOMMENDATIONS.

M. BASIS OF PAYMENT

PAYMENT WILL BE MADE AT THE CONTRACT UNIT PRICE BID FOR:

ITEM	UNIT	DESCRIPTION
SPECIAL	CU. YD.	CLASS S LIGHTWEIGHT CONCRETE, SUPERSTRUCTURE
SPECIAL	LUMP	CLASS S LIGHTWEIGHT CONCRETE, FOR PRE-PLACEMENT TESTING

WATERPROOFING MISC:

64. ITEM SPECIAL - SEALING CONCRETE SURFACES WITH TINTED NON-EPOXY SEALER

TINTED NON-EPOXY SEALER SHALL BE FURNISHED AND APPLIED TO THE ENTIRE UPPER DECK RAILINGS, INCLUDING POSTS AND PYLONS. AND UNDERDECK RETURNS AS SHOWN ON SHT. 223/270

PREPARATION, MATERIAL AND APPLICATION SHALL CONFORM TO THE SPECIFICATIONS OF PROPOSAL NOTE TITLED "SEALING OF CONCRETE SURFACES", MODIFIED THE SEALER SHALL BE TINTED WHITE TO MATCH FEDERAL COLOR STANDARD NO. 37722.

THE COST FOR FURNISHING ALL MATERIALS, LABOR AND EQUIPMENT NECESSARY TO ACCOMPLISH THIS WORK SHALL BE INCLUDED IN THE LUMP SUM PRICE BID FOR ITEM SPECIAL - SEALING CONCRETE SURFACES WITH TINTED NON-EPOXY SEALER.

Waterproofing Misc.:

65. ITEM 518, 6" PERFORATED CORRUGATED PLASTIC PIPE, INCLUDING SPECIALS, AS PER PLAN

CORRUGATED PIPE USED IN WALL OR BULKHEAD DRAINAGE SHALL BE 6 INCH DIAMETER, PLASTIC CORRUGATED AS PER SUPPLEMENTAL SPECIFICATION 944, AASHTO M294, TYPE SP. THIS ITEM SHALL INCLUDE ALL ELBOWS, TEES AND END CAPS REQUIRED TO COMPLETE THE DRAINAGE SYSTEM.

66. ITEMS NOT INCLUDED IN BRIDGE PLANS

THE FOLLOWING ITEMS ARE NOT INCLUDED IN THE BRIDGE PLANS. SEE ROADWAY PLANS FOR DETAILS.

(1) APPROACH PAVEMENT AND RESURFACING

(2) REMOVAL OF EXISTING PAVEMENTS, ETC.

(3) DETOUR AND MAINTENANCE OF TRAFFIC PLANS

(4) UNDERGROUND DRAINAGE PLANS

(5) TRAFFIC SIGNAL PLANS

(6) LIGHTING PLANS

COUNTY BRIDGE NO. 84

HOWARD NEEDLES TAMMEN & BERGENDOFF
ARCHITECTS ENGINEERS PLANNERS
HNTB

GENERAL NOTES
BR. NO. CUY – 6 – 1499
REHABILITATION OF
VETERANS MEMORIAL BRIDGE
(U.S. 6, 20, 42 & S.R. 3 OVER CUYAHOGA RIVER)
CLEVELAND CUYAHOGA COUNTY OHIO

DRAWN	TRACED	CHECKED	REVIEWED	REVISED
B.E.B.	B.F.	A.D.Y.	C.A.B.	
DATE 3/22/94	DATE 3/28/94	DATE 3/30/94	DATE 3/31/94	SHEET 188/270

FHWA REGION	STATE	PROJECT	
5	OHIO		

151
412

CUYAHOGA COUNTY
CUY – 6 – 14.99

MADE BY: B.E.B.	DATE: 3/23/94
CHECKED BY: A.D.Y.	DATE: 6/13/94

ESTIMATED QUANTITIES

ITEM	ITEM EXT.	TOTAL	UNIT	DESCRIPTION	LOCATION TUNNELS/ W.STATION	LOCATION APPROACH SPANS	LOCATION MAIN SPAN	LOCATION GEN'L	AS PER PLAN REF. SHT.NO.
202	11203	L.S.	LUMP SUM	PORTIONS OF STRUCTURES REMOVED, OVER 20 FOOT SPAN,				L.S.	3
				AS PER PLAN					
SPECIAL	20302000	1,662	CU. YD.	ENGINEERED FILL	540	1,122			
503	11100	L.S.	LUMP SUM	COFFERDAMS, CRIBS AND SHEETING				L.S.	
503	21101	792	CU. YD.	UNCLASSIFIED EXCAVATION, AS PER PLAN	492			300	4
509	15840	4,115,782	LB.	EPOXY COATED REINFORCING STEEL, GRADE 60	159,406	3,500,257	416,119	40,000	
510	11101	1,323	EACH	DOWEL HOLE, AS PER PLAN	21	802		500	4
511	33405	10,406	CU. YD.	CLASS S CONCRETE, SUPERSTRUCTURE,	245	10,161			5
				USING SHRINKAGE COMPENSATING CEMENT, AS PER PLAN					
511	33410	L.S.	LUMP SUM	CLASS S CONCRETE, USING SHRINKAGE COMPENSATING CEMENT,				L.S.	
				FOR PRE–PLACEMENT TESTING					
511	33405	498	CU. YD.	CLASS S CONCRETE, TUNNEL ROOF SLAB,	423			75	5
				USING SHRINKAGE COMPENSATING CEMENT, AS PER PLAN					
511	46500	203	CU. YD.	CLASS C CONCRETE, FOOTINGS	164	39			
511	51100	2,671	CU. YD.	CLASS C CONCRETE, PIERS AND ABUTMENTS, AS PER PLAN	121	2,350		200	4
511	34450	427	CU. YD.	CLASS S CONCRETE, COLUMNS, AS PER PLAN	24	353		50	4
511	34450	1,594	CU. YD.	CLASS S CONCRETE, FLOORBEAMS, AS PER PLAN	18	1,476		100	4
511	34450	665	CU. YD.	CLASS S CONCRETE, JACK ARCHES, AS PER PLAN	60	565		40	4
511	34450	188	CU. YD.	CLASS S CONCRETE, LOWER DECK RAILINGS, AS PER PLAN		138		50	4
SPECIAL	51133404	1,903	CU. YD.	CLASS S LIGHTWEIGHT CONCRETE, SUPERSTRUCTURE,			1,903		
				USING SHRINKAGE COMPENSATING CEMENT					
SPECIAL◇	51134450	1,903	CU. YD.	CLASS S LIGHTWEIGHT CONCRETE, SUPERSTRUCTURE,			1,903		
SPECIAL◇	51181200	L.S.	LUMP SUM	CLASS S LIGHTWEIGHT CONCRETE, FOR PRE–PLACEMENT TESTING				L.S.	
SPECIAL	51133410	L.S.	LUMP SUM	CLASS S LIGHTWEIGHT CONCRETE, USING				L.S.	
				SHRINKAGE COMPENSATING CEMENT, FOR PRE–PLACEMENT TESTING					
512	33300	156	SQ. YD.	TYPE A WATERPROOFING	156				
512	55800	4,033	SQ. YD.	TYPE D WATERPROOFING	3,933			100	
SPECIAL	51267200	27,298	SQ. YD.	◐ SEALING OF CONCRETE WEARING SURFACES (NON–EPOXY)		20,986	6,312		150
				◐ Waterproofing, Misc.:					
SPECIAL	51267450	L.S.	LUMP SUM	◐ SEALING CONCRETE SURFACES WITH TINTED NON–EPOXY SEALER				L.S.	150A
				(SEE PROPOSAL NOTE)					
SPECIAL	51267450	L.S.	LUMP SUM	◐ SEALING OF CONCRETE SURFACES, MODIFIED, EPOXY-URETHANE				L.S.	144
				(SEE PROPOSAL NOTE)					
513	00100	118,857	LB.	STRUCTURAL STEEL (AISC CERTIFICATION NOT REQUIRED)	4,128	46,929	67,800		
513	16590	1,068,048	LB.	STRUCTURAL STEEL (AISC CATEGORY I), AS PER PLAN			1,048,048	20,000	7
SPECIAL	51316590	110,437	LB.	REPLACEMENT OF STRUCTURAL STEEL PINS AND HANGERS			110,437		
SPECIAL	51316590	5,000	LB.	STRUCTURAL STEEL (AISC CATEGORY I)			5,000		
SPECIAL	51316800	31,013	EACH	REPLACE EXISTING FASTENERS WITH NEW HIGH STRENGTH BOLTS			29,013	2,000	
SPECIAL	51317600	11,850	SQ. FT.	OPEN GRID STEEL FLOOR			11,850		
513	20000	15,440	EACH	WELDED STUD SHEAR CONNECTORS		80	15,360		
SPECIAL	51400100	L.S.	LUMP SUM	SURFACE PREPARATION OF EXISTING STEEL, SYSTEM OZEU				L.S.	
				(SEE PROPOSAL NOTE)					
SPECIAL	51400200	L.S.	LUMP SUM	FIELD PAINTING OF EXISTING STEEL, PRIME COAT,				L.S.	
				SYSTEM OZEU (SEE PROPOSAL NOTE)					
SPECIAL	51400300	L.S.	LUMP SUM	FIELD PAINTING OF EXISTING STEEL, INTERMEDIATE COAT,				L.S.	
				SYSTEM OZEU (SEE PROPOSAL NOTE)					
SPECIAL	51400400	L.S.	LUMP SUM	FIELD PAINTING OF EXISTING STEEL, FINISH COAT,				L.S.	
				SYSTEM OZEU (SEE PROPOSAL NOTE)					
SPECIAL	51400500	1,000	LIN. FT.	CAULKING (SEE PROPOSAL NOTE)			1,000		
514	27704	L.S.	LUMP SUM	FIELD PAINTING OF NEW STEEL, SYSTEM IZEU (SEE PROPOSAL NOTE)				L.S.	
SPECIAL	53001300	1,000	LIN. FT.	PACK RUST REPAIR AND CAULKING			1,000		
516	10901	760	LIN. FT.	ELASTOMERIC COMPRESSION SEAL, AS PER PLAN		760			
516	11211	1,713	LIN. FT.	STRUCTURAL EXPANSION JOINT, INCLUDING 3" ELASTOMERIC		1,522	191		18
				STRIP SEAL, AS PER PLAN					
516	11211	202	LIN. FT.	STRUCTURAL EXPANSION JOINT, INCLUDING 4" ELASTOMERIC			202		18
				STRIP SEAL, AS PER PLAN					
516	46900	32	EACH	BEARING DEVICES			32		
SPECIAL	51776300	3,412	LIN. FT.	LOWER DECK RAILING		3,412			

ESTIMATED QUANTITIES

ITEM	ITEM EXT.	TOTAL	UNIT	DESCRIPTION	LOCATION TUNNELS/ W.STATION	LOCATION APPROACH SPANS	LOCATION MAIN SPAN	LOCATION GEN'L	AS PER PLAN REF. SHT.NO.
SPECIAL	51776300	90	LIN. FT.	RETAINING WALL RAILING		90			
SPECIAL	51776300	5,830	LIN. FT.	UPPER DECK RAILING	370	4,273	1,187		
SPECIAL	51776300	5,830	LIN. FT.	ALUMINUM FENCE	370	4,273	1,187		
518	12001	31	EACH	SCUPPER, INCLUDING SUPPORTS, AS PER PLAN	1	22	8		18
518	21200	101	CU. YD.	POROUS BACKFILL WITH FILTER FABRIC	101				
518	40001	137	LIN. FT.	6" PERFORATED CORRUGATED PLASTIC PIPE, AS PER PLAN	137				18B
518	51200	2,269	LIN. FT.	10" PIPE DOWNSPOUT, INCLUDING SPECIALS, AS PER PLAN	16	1,723	530		18
SPECIAL	51911600	58,905	SQ. FT.	PATCHING CONCRETE STRUCTURES	5,929	44,976		8,000	
SPECIAL	53000600	6,134	SQ. FT.	REPAIR STRUCTURAL STEEL MEMBERS ENCASED IN CONCRETE		5,134		1,000	
SPECIAL	53000600	8,800	SQ. FT.	REPAIRING CONCRETE STRUCTURES WITH SOLVENT FREE EPOXY RESIN	4,250	2,550		2,000	
SPECIAL	53000400	43	EACH	COLUMN BASE REPAIRS	33			10	
SPECIAL	53000400	92	EACH	REPLACEMENT OF LOWER DECK FLOORBEAM CORBELS		77		15	
SPECIAL	51912600	9,921	LIN. FT.	CONCRETE REPAIR BY EPOXY INJECTION (SEE PROPOSAL NOTE)	594	6,827		2,500	
SPECIAL	53000200	L.S.	LUMP SUM	INSPECTION OF EXISTING STRUCTURE				L.S.	
SPECIAL	53000200	L.S.	LUMP SUM	TEMPORARY SHORING, BRACING AND PROTECTIVE STRUCTURES				L.S.	
SPECIAL	53000200	L.S.	LUMP SUM	REMOVE, STORE, AND REINSTALL IMPACT ATTENUATORS				L.S.	
SPECIAL	53000200	L.S.	LUMP SUM	FLAGPOLES, MONUMENTS, PLANTERS, AND BENCHES				L.S.	
SPECIAL	53000200	L.S.	LUMP SUM	BRONZE NAME PLATES				L.S.	
SPECIAL	53000200	L.S.	LUMP SUM	PROTECTION AND SUPPORT MODIFICATIONS FOR EXISTING				L.S.	
				CPP ELECTRIC LINES					
SPECIAL	53000200	L.S.	LUMP SUM	PROTECTION AND SUPPORT MODIFICATIONS FOR EXISTING				L.S.	
				CENTER STREET SWING BRIDGE ELECTRIC CABLE					
SPECIAL	53000200	L.S.	LUMP SUM	PROTECTION AND SUPPORT MODIFICATIONS FOR EXISTING				L.S.	
				AMERITECH DUCTS					
SPECIAL	53000600	11,546	SQ. FT.	FIBERGLASS GRATING			11,546		
606	12501	1,182	LIN. FT.	GUARDRAIL, TYPE 4, AS PER PLAN			1,182		15
606	13001	2,474	LIN. FT.	GUARDRAIL, TYPE 5, AS PER PLAN		105	2,369		15
SPECIAL*	85050000	10,406	CU. YD.	SUPERPLASTICIZED CONCRETE, SUPERSTRUCTURE	245	10,161			
SPECIAL**	85050000	498	CU. YD.	SUPERPLASTICIZED CONCRETE, TUNNEL ROOF SLAB	423			75	
SPECIAL*	85050060	L.S.	LUMP SUM	SUPERPLASTICIZED CONCRETE, TRIAL MIX				L.S.	

* – These two items shall constitute one alternate bid to CLASS S CONCRETE, SUPERSTRUCTURE, USING SHRINKAGE COMPENSATING CEMENT, AS PER PLAN and CLASS S CONCRETE, USING SHRINKAGE COMPENSATING CEMENT, FOR PRE–PLACEMENT TESTING.

** – This item shall be an alternate bid to CLASS S CONCRETE, TUNNEL ROOF SLAB, USING SHRINKAGE COMPENSATING CEMENT, AS PER PLAN

◇ – These two items shall constitute one alternate bid to CLASS S LIGHTWEIGHT CONCRETE, SUPERSTRUCTURE, USING SHRINKAGE COMPENSATING CEMENT and CLASS S LIGHTWEIGHT CONCRETE, USING SHRINKAGE COMPENSATING CEMENT, FOR PRE–PLACEMENT TESTING.

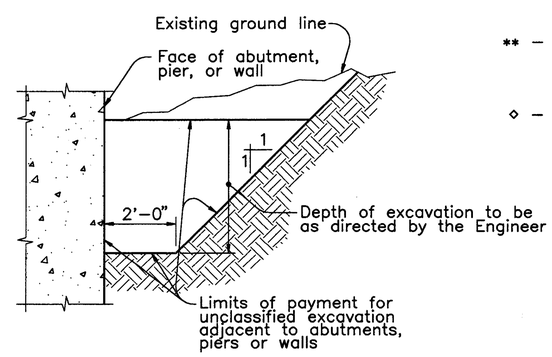

UNCLASSIFIED EXCAVATION CONTINGENCY QUANTITY PAY LIMITS ADJACENT TO ABUTMENTS, PIERS OR WALLS

COUNTY BRIDGE NO. 84

HOWARD NEEDLES TAMMEN & BERGENDOFF
ARCHITECTS ENGINEERS PLANNERS
HNTB

ESTIMATED QUANTITIES
BR. NO. CUY – 6 – 1499
REHABILITATION OF
VETERANS MEMORIAL BRIDGE
(U.S. 6, 20, 42 & S.R. 3 OVER CUYAHOGA RIVER)
CLEVELAND CUYAHOGA COUNTY OHIO

DRAWN B.E.B.	TRACED B.E.B.	CHECKED A.D.Y.	REVIEWED C.A.B.	REVISED
DATE 3/23/94	DATE 3/23/94	DATE 6/13/94	DATE 6/15/94	SHEET 19 /270

\11646\EQ1.DWG

FHWA REGION	STATE	PROJECT	
5	OHIO		

152/412

CUYAHOGA COUNTY
CUY – 6 – 14.99

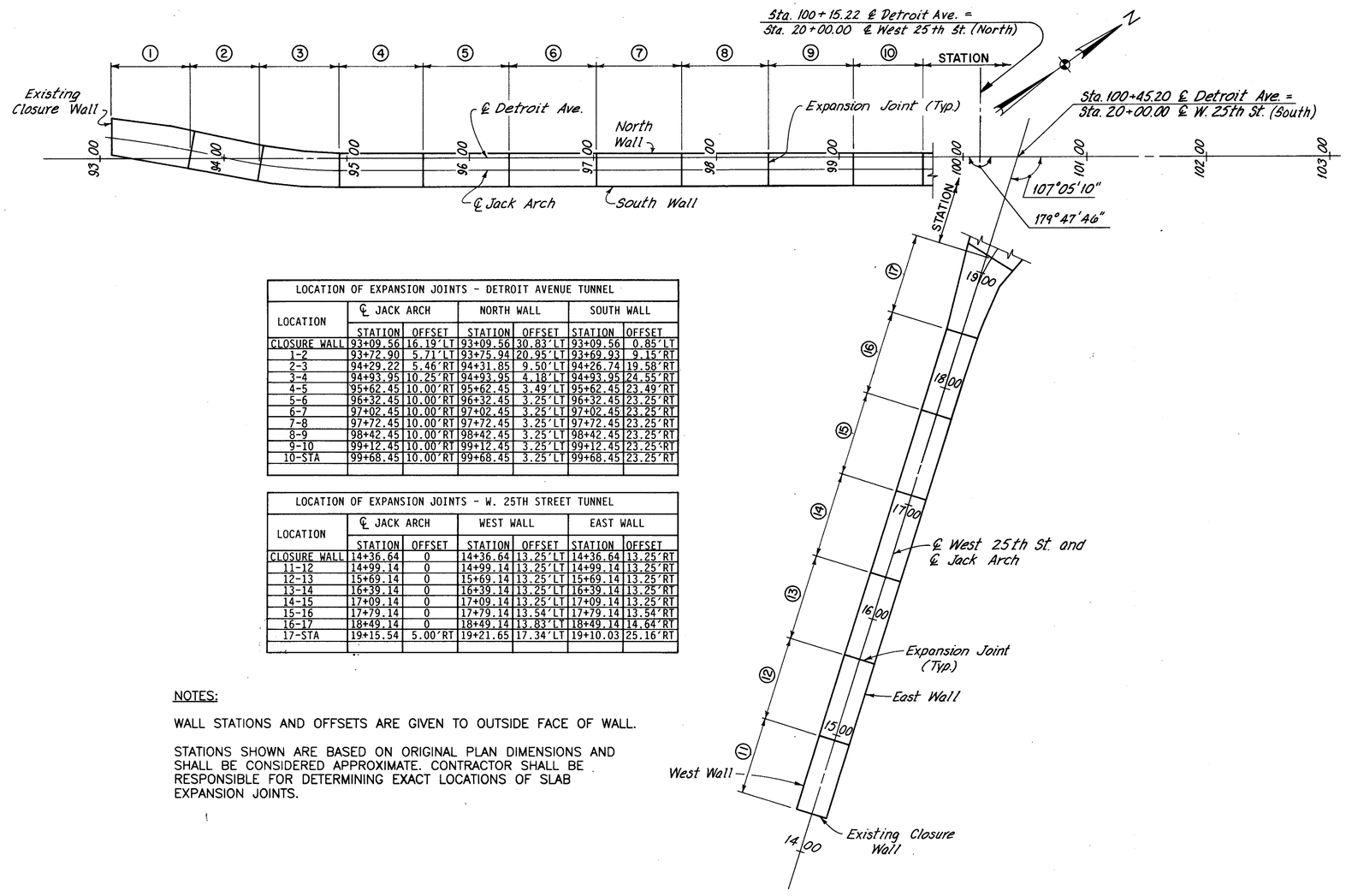

LOCATION OF EXPANSION JOINTS - DETROIT AVENUE TUNNEL						
LOCATION	℄ JACK ARCH		NORTH WALL		SOUTH WALL	
	STATION	OFFSET	STATION	OFFSET	STATION	OFFSET
CLOSURE WALL	93+09.56	16.19'LT	93+09.56	30.83'LT	93+09.56	0.85'LT
1-2	93+72.90	5.71'LT	93+75.94	20.95'LT	93+69.93	9.15'RT
2-3	94+29.22	5.46'RT	94+31.85	9.50'LT	94+26.74	19.58'RT
3-4	94+93.95	10.25'RT	94+93.95	4.18'LT	94+93.95	24.55'RT
4-5	95+62.45	10.00'RT	95+62.45	3.49'LT	95+62.45	23.49'RT
5-6	96+32.45	10.00'RT	96+32.45	3.25'LT	96+32.45	23.25'RT
6-7	97+02.45	10.00'RT	97+02.45	3.25'LT	97+02.45	23.25'RT
7-8	97+72.45	10.00'RT	97+72.45	3.25'LT	97+72.45	23.25'RT
8-9	98+42.45	10.00'RT	98+42.45	3.25'LT	98+42.45	23.25'RT
9-10	99+12.45	10.00'RT	99+12.45	3.25'LT	99+12.45	23.25'RT
10-STA	99+68.45	10.00'RT	99+68.45	3.25'LT	99+68.45	23.25'RT

LOCATION OF EXPANSION JOINTS - W. 25TH STREET TUNNEL						
LOCATION	℄ JACK ARCH		WEST WALL		EAST WALL	
	STATION	OFFSET	STATION	OFFSET	STATION	OFFSET
CLOSURE WALL	14+36.64	0	14+36.64	13.25'LT	14+36.64	13.25'RT
11-12	14+99.14	0	14+99.14	13.25'LT	14+99.14	13.25'RT
12-13	15+69.14	0	15+69.14	13.25'LT	15+69.14	13.25'RT
13-14	16+39.14	0	16+39.14	13.25'LT	16+39.14	13.25'RT
14-15	17+09.14	0	17+09.14	13.25'LT	17+09.14	13.25'RT
15-16	17+79.14	0	17+79.14	13.54'LT	17+79.14	13.54'RT
16-17	18+49.14	0	18+49.14	13.83'LT	18+49.14	14.64'RT
17-STA	19+15.54	5.00'RT	19+21.65	17.34'LT	19+10.03	25.16'RT

NOTES:

WALL STATIONS AND OFFSETS ARE GIVEN TO OUTSIDE FACE OF WALL.

STATIONS SHOWN ARE BASED ON ORIGINAL PLAN DIMENSIONS AND SHALL BE CONSIDERED APPROXIMATE. CONTRACTOR SHALL BE RESPONSIBLE FOR DETERMINING EXACT LOCATIONS OF SLAB EXPANSION JOINTS.

COUNTY BRIDGE NO. 84

HOWARD NEEDLES TAMMEN & BERGENDOFF
ARCHITECTS ENGINEERS PLANNERS
HNTB

GEOMETRICS – DETROIT AVE. AND WEST 25TH ST. TUNNELS
BR. NO. CUY – 6 – 1499
REHABILITATION OF
VETERANS MEMORIAL BRIDGE
(U.S. 6, 20, 42 & S.R. 3 OVER CUYAHOGA RIVER)

CLEVELAND CUYAHOGA COUNTY OHIO

DRAWN W.J.V.	TRACED G.C.A.	CHECKED C.K.B.	REVIEWED C.A.B.	REVISED
DATE 5/7/90	DATE 5/14/90	DATE 7/7/90	DATE 4/5/94	SHEET 20/270

FHWA REGION	STATE	PROJECT	
5	OHIO		

153/412

CUYAHOGA COUNTY
CUY – 6 – 14.99

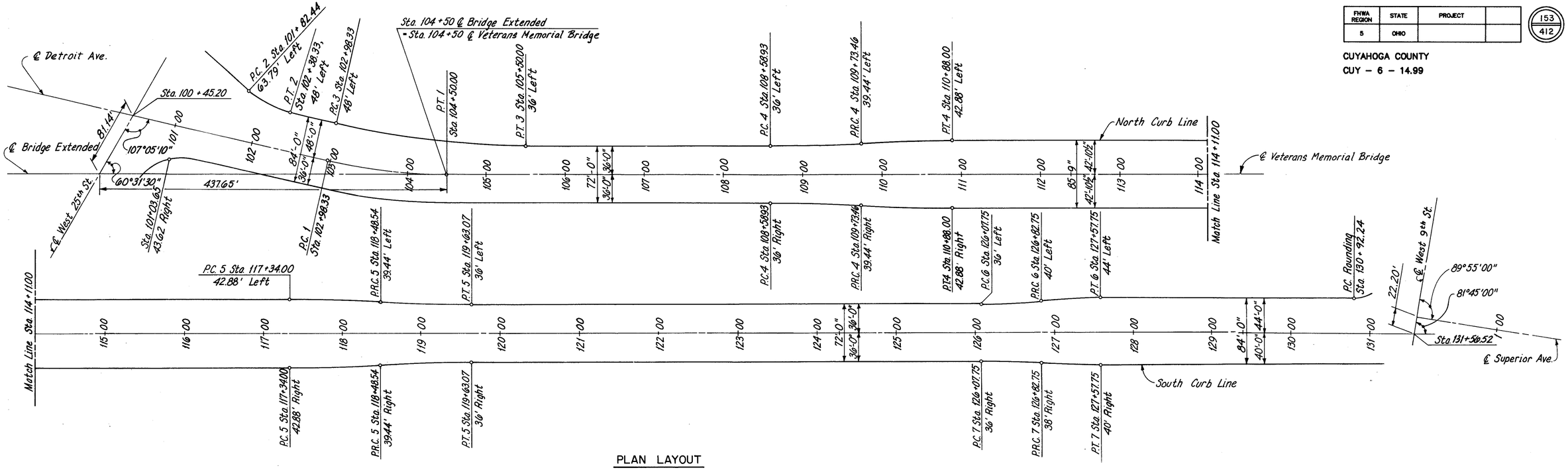

PLAN LAYOUT

CURVE 1

P.I. STA. 103+74.47 = 103+73.87
℄ Bridge Extended

Δ = 12° 23'20.0"
D = 08° 10'06.7"
R = 701.42'
T = 76.13'
L = 151.67'
E = 4.12'

CURVE 2

P.I. STA. 102+08.16, 48'Left

Δ = 31° 32'31.4"
D = 53° 37'17.9"
R = 106.85'
T = 30.18'
L = 58.82'
E = 4.18'

CURVE 3

P.I. STA. 104+27.20, 35.65'Left

Δ = 12° 55'45.0"
D = 05° 20'14.4"
R = 1073.49'
T = 121.64'
L = 242.24'
E = 6.87'

CURVES 4 AND 5

P.C. 4 Sta. 108+58.93
P.C. 5 Sta. 117+34.00

Δ = 03° 26'17.3"
D = 03° 00'00.0"
R = 1909.86'
T = 57.32'
L4 = 114.60'
L5 = 114.60'

CURVE 6

P.C. STA. 126+07.75

Δ = 06° 06'20.6"
D = 08° 07'31.7"
R = 705.14'
T = 37.61'
L = 75.14'
P.T. Sta. 127+57.75

CURVE 7

P.C. STA. 126+07.75

Δ = 03° 03'18.1"
D = 04° 04'17.0"
R = 1407.28'
T = 37.53'
L = 75.04'
P.T. Sta. 127+57.75

NOTES:
FOR SPECIAL GEOMETRICS AT FASCIA BETWEEN STA. 126+07.75 AND STA. 127+04.13 SEE SHEET 204/270.

FOR GEOMETRICS OF MEDIAN AT PIERS 3 AND 4 SEE SHEET 198/270.

FOR GEOMETRICS OF WEST 25TH STREET AND DETROIT AVENUE TUNNELS SEE SHEET 20/270.

COUNTY BRIDGE NO. 84

HOWARD NEEDLES TAMMEN & BERGENDOFF
ARCHITECTS ENGINEERS PLANNERS
HNTB

GEOMETRICS
BR. NO. CUY – 6 – 1499
REHABILITATION OF
VETERANS MEMORIAL BRIDGE
(U.S. 6, 20, 42 & S.R. 3 OVER CUYAHOGA RIVER)
CLEVELAND CUYAHOGA COUNTY OHIO

DRAWN W.J.V.	TRACED G.C.A.	CHECKED C.K.B.	REVIEWED C.A.B.	REVISED
DATE 5/7/90	DATE 5/14/90	DATE 7/7/90	DATE 4/5/94	SHEET 21/270

FHWA REGION	STATE	PROJECT	
5	OHIO		

154/412

CUYAHOGA COUNTY
CUY – 6 – 14.99

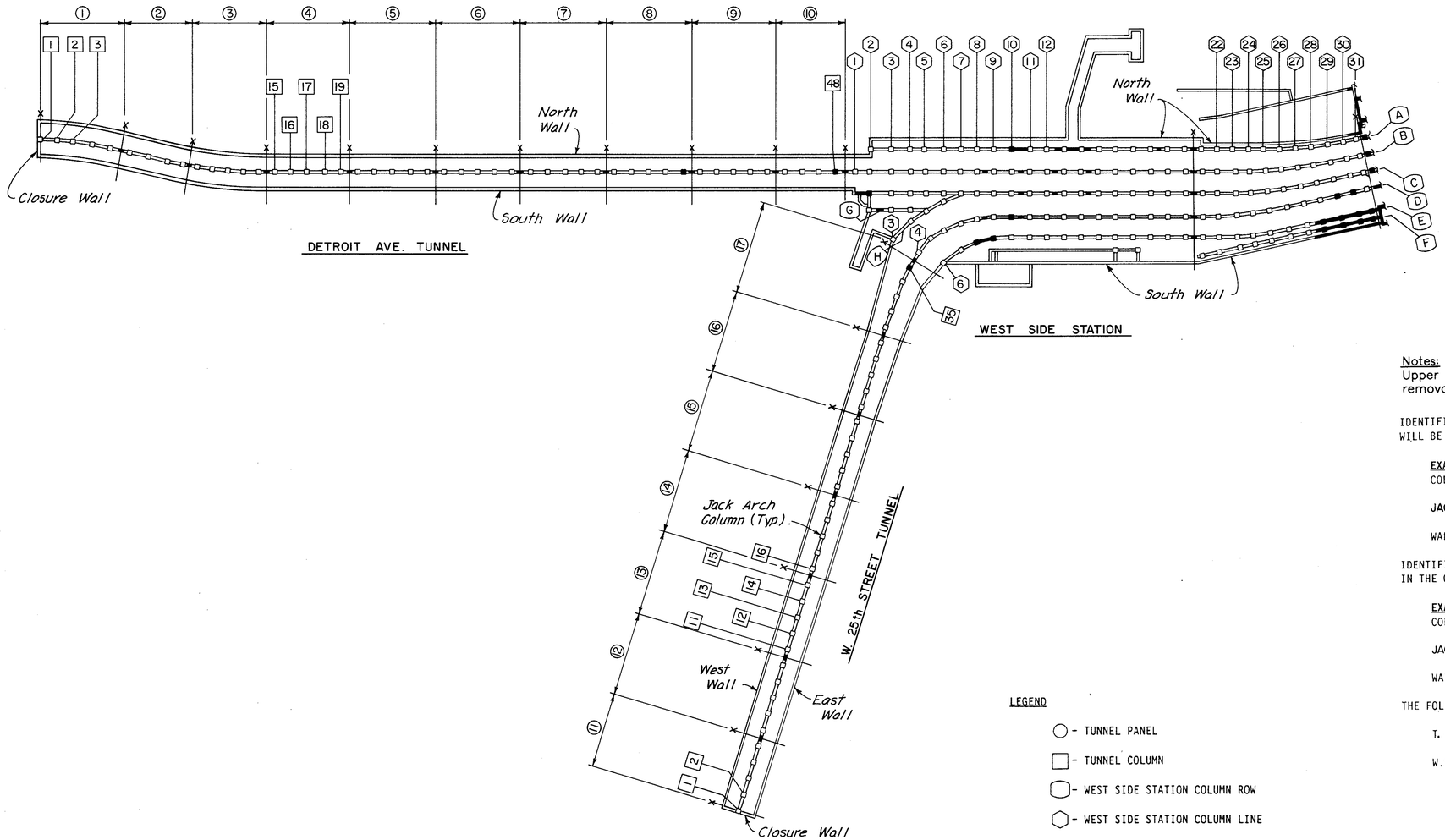

PLAN

50 0 50 100 150 200
SCALE IN FEET

LEGEND

- ○ - TUNNEL PANEL
- □ - TUNNEL COLUMN
- ⬡ - WEST SIDE STATION COLUMN ROW
- ⬡ - WEST SIDE STATION COLUMN LINE
- x - EXPANSION JOINT
- ■ - MEMBER TO BE REPLACED

Notes:
Upper and lower deck slab removal not shown.

IDENTIFICATION OF MEMBERS IN THE WEST SIDE STATION AREA WILL BE CALLED OUT IN THE ORDER - LINE AND ROW.

EXAMPLES:
COLUMN 13, B (LINE 13, ROW B)

JACK ARCH 15-16, C (LINE 15 TO 16, ROW C)

WALL N, 8-9 (NORTH WALL, LINE 8 TO LINE 9)

IDENTIFICATION OF MEMBERS IN THE TUNNELS ARE CALLED OUT IN THE ORDER - PANEL AND COLUMN NUMBER.

EXAMPLES:
COLUMN 4, 16 (PANEL 4, COLUMN 16)

JACK ARCH 13, 12-13 (PANEL 13, COLUMN 12 TO COLUMN 13)

WALL 15, W (PANEL 15, WEST WALL)

THE FOLLOWING ABBREVIATIONS WILL BE USED:

T. - TUNNEL

W.S. - WEST SIDE STATION

COUNTY BRIDGE NO. 84

HOWARD NEEDLES TAMMEN & BERGENDOFF
ARCHITECTS ENGINEERS PLANNERS
HNTB

MEMBER IDENTIFICATION
AND REMOVAL PLAN
WEST APPROACH UPPER DECK
BR. NO. CUY – 6 – 1499
REHABILITATION OF
VETERANS MEMORIAL BRIDGE
(U.S. 6, 20, 42 & S.R. 3 OVER CUYAHOGA RIVER)
CLEVELAND CUYAHOGA COUNTY OHIO

DRAWN C.K.B.	TRACED G.C.A.	CHECKED K.S.R.	REVIEWED C.A.B.	REVISED
DATE 4/6/90	DATE 4/9/90	DATE 5/20/92	DATE 4/5/94	SHEET 22 /270

FHWA REGION	STATE	PROJECT	
5	OHIO		

155/412

CUYAHOGA COUNTY
CUY – 6 – 14.99

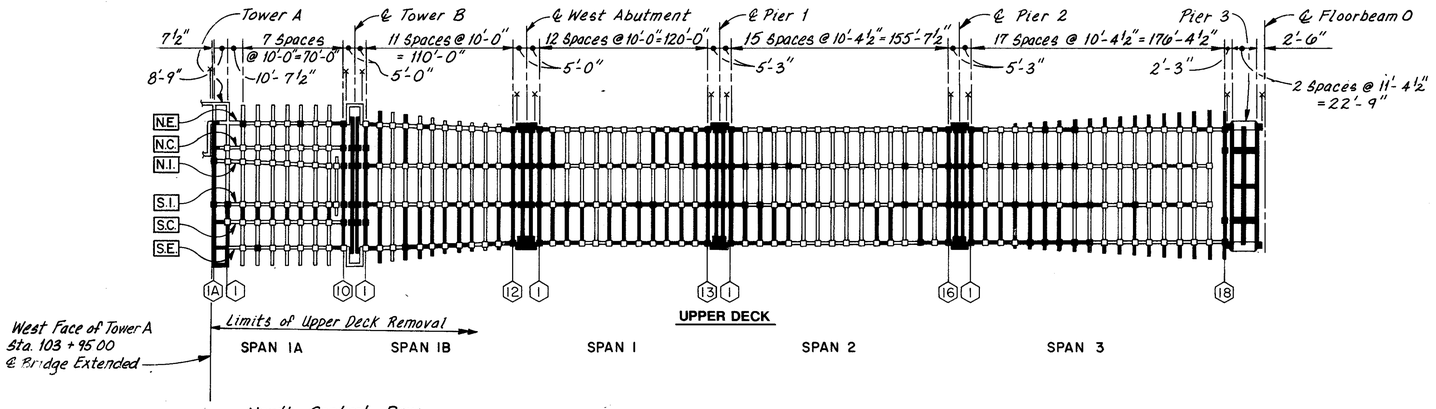

THE FOLLOWING ABBREVIATIONS WILL BE USED:

N.E. - NORTH EXTERIOR ROW
N.C. - NORTH CENTRAL ROW
N.I. - NORTH INTERIOR ROW
S.I. - SOUTH INTERIOR ROW
S.C. - SOUTH CENTRAL ROW
S.E. - SOUTH EXTERIOR ROW
E.S. - EAST SIDE STATION
P. - PIER
U.D. - UPPER DECK
L.D. - LOWER DECK
E.A. - EAST ABUTMENT
W.A. - WEST ABUTMENT

NOTES:
IDENTIFICATION OF MEMBERS WILL BE CALLED OUT IN THE ORDER - SPAN, LINE AND ROW.

EXAMPLES:
COLUMN: 2,8,S.I. (SPAN 2, LINE 8, SOUTH INTERIOR ROW)

JACK ARCH: 9,10-11,N.E. (SPAN 9, LINE 10 TO LINE 11, NORTH EXTERIOR ROW)

FLOORBEAM: 6,11,N.E. TO S.E. (SPAN 6, LINE 11, NORTH EXTERIOR ROW TO SOUTH EXTERIOR ROW)

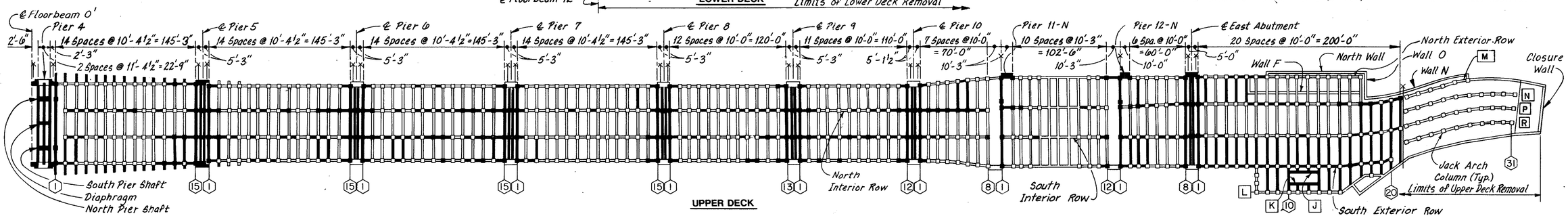

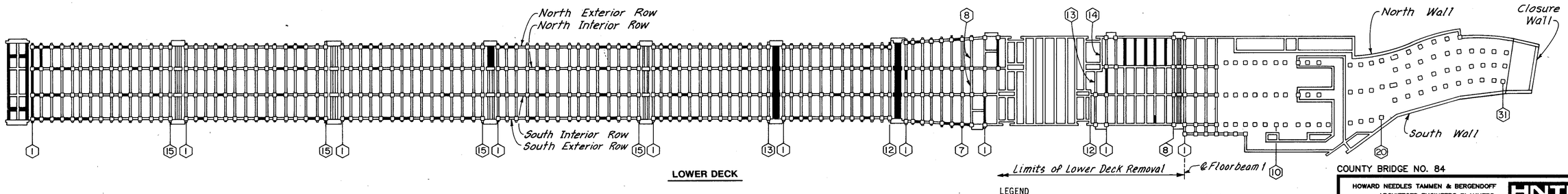

PLAN

50 0 50 100 150 200
SCALE IN FEET

LEGEND

- LINE
- ROW
- EXPANSION JOINT
- DENOTES MEMBER REMOVAL (PARTIAL MEMBER REMOVAL OF PIERS NOT SHOWN)

Note: All dimensions are horizontal

COUNTY BRIDGE NO. 84

HOWARD NEEDLES TAMMEN & BERGENDOFF
ARCHITECTS ENGINEERS PLANNERS
HNTB

MEMBER IDENTIFICATION AND REMOVAL PLAN
BR. NO. CUY – 6 – 1499
REHABILITATION OF
VETERANS MEMORIAL BRIDGE
(U.S. 6, 20, 42 & S.R. 3 OVER CUYAHOGA RIVER)
CLEVELAND CUYAHOGA COUNTY OHIO

DRAWN C.K.B.	TRACED G.C.A.	CHECKED W.J.V.	REVIEWED C.A.B.	REVISED
DATE 4/6/90	DATE 4/10/90	DATE 9/29/93	DATE 4/5/94	SHEET 23/270

MEMBER LOCATION	REPAIRING CONCRETE STRUCTURES PATCH SQ. FT.	REPLACE CU. FT.	REPAIR OF CRACKS LIN. FT.
DETROIT AVE. TUNNEL			
COLUMNS			
T.,1, 1	12		
2		*	
3		*	
4	2		
T.,1, 5	18		
T.,2, 6	3		
7			
8	3		
T.,2, 9			
T.,3, 10			
11			
12	5		
13	6		
T.,3, 14	3		
T.,4, 15	5		
16	8		
17		*	
18		*	
T.,4, 19		*	
T.,5, 20	2		
21	7		
22		*	
23	12	*	
T.,5, 24	2		
T.,6, 25	15	*	
26	14	*	
27	4		
28	5		
T.,6, 29	8	*	
T.,7, 30		*	
31		*	
32	6		
33		*	
T.,7, 34	2		
T.,8, 35		*	
36	5		
37	2		
38			
T.,8, 39		22	5.8
T.,9, 40	2		
41	11		
42	2		
43			
T.,9, 44			
T.,10, 45			
46			
47			
T.,10, 48		22	5.8
JACK ARCHES			
T.,1, 1 – 2	6		
2 – 3			
3 – 4	17		
T.,1, 4 – 5			
5 – 6		17	
T.,2, 6 – 7			
7 – 8	3		
T.,2, 8 – 9			
9 – 10		17	
T.,3, 10 – 11			
11 – 12			
12 – 13			
T.,3, 13 – 14			
14 – 15		17	
T.,4, 15 – 16			
16 – 17			
17 – 18			
T.,4, 18 – 19			
19 – 20		18	
T.,5, 20 – 21			
21 – 22			
22 – 23			
T.,5, 23 – 24			
24 – 25		18	

MEMBER LOCATION	REPAIRING CONCRETE STRUCTURES PATCH SQ. FT.	REPLACE CU. FT.	REPAIR OF CRACKS LIN. FT.
T.,6, 25 – 26			
26 – 27			
27 – 28			
T.,6, 28 – 29			
29 – 30		18	
T.,7, 30 – 31			
31 – 32			
32 – 33			7
T.,7, 33 – 34			
34 – 35		18	
T.,8, 35 – 36			
36 – 37			
37 – 38			
T.,8, 38 – 39			
39 – 40		18	
T.,9, 40 – 41			
41 – 42	22		
42 – 43			
T.,9, 43 – 44			
44 – 45		18	
T.,10, 45 – 46			
46 – 47	34		3
T.,10, 47 – 48			
T.,48,–W.S.,1		18	
WALLS			
T., 1, N	352		
2	90		
3	85		
4	85		
5	120		
6	93		
7	185		
8	130		
9	77		
T., 10, N	320		
T., 1, S	250		
2	152		
3	181		
4	216		
5	240		
6	235		
7	230		
8	247		
9	197		
T., 10, S	430		
ROOF SLAB			
T., 1	120	263	
2	195	414	
3	55	252	
4	40	258	
5	45	229	
6	35	256	
7	82	369	
8	70	341	
9	105	369	
T., 10	160	312**	
(TOTAL DETROIT AVE. TUNNEL)			
	5068	3284	21.6
WEST 25TH ST. TUNNEL			
COLUMNS			
T.,11, 1			
2	4		
3	4		
4			
T.,11, 5			
T.,12, 6		*	
7	5		
8			
9			
T.,12, 10	8		
T.,13, 11	5	*	
12			

MEMBER LOCATION	REPAIRING CONCRETE STRUCTURES PATCH SQ. FT.	REPLACE CU. FT.	REPAIR OF CRACKS LIN. FT.
13		*	
14	8		
T.,13, 15	3		
T.,14, 16		*	
17			
18	5		
19	2		
T.,14, 20	10		
T.,15, 21		*	
22		*	
23		*	
24		*	
T.,15, 25		*	
T.,16, 26		*	
27		*	
28		*	
29		*	
T.,16, 30		*	
T.,17, 31	6		
32			
33			
34			
T.,17, 35		36	7.3
JACK ARCHES			
T.,11, 1 – 2	3		
2 – 3			
3 – 4			
T.,11, 4 – 5	3		
5 – 6		18	
T.,12, 6 – 7			
7 – 8			
8 – 9			
T.,12, 9 – 10	4		
10 – 11		18	
T.,13, 11 – 12	4		
12 – 13			
13 – 14	3		3
T.,13, 14 – 15			
15 – 16		18	
T.,14, 16 – 17			
17 – 18			
18 – 19			
T.,14, 19 – 20			
20 – 21		18	
T.,15, 21 – 22			
22 – 23			
23 – 24			
T.,15, 24 – 25			
25 – 26		18	
T.,16, 26 – 27			
27 – 28			
28 – 29			
T.,16, 29 – 30			
30 – 31		17	
T.,17, 31 – 32			
32 – 33			
33 – 34			
T.,17, 34 – 35			
T.,35 – W.S.,4		28	
WALLS			
T., 11, W	73		
12	49		
13	52		
14	49		
15	46		
16	68		
T., 17, W	73		
T., 11, E	145		
12	75		
13	134		
14	98		
15	134		
16	180		
T., 17, E	130		
ROOF SLAB			
T., 11	40	312	22

MEMBER LOCATION	REPAIRING CONCRETE STRUCTURES PATCH SQ. FT.	REPLACE CU. FT.	REPAIR OF CRACKS
12	45	228	61
13	37	256	8
14	24	284	
15	25	258	
16	80	427	16
T., 17	120	710***	
(TOTAL WEST 25TH ST. TUNNEL)			
	1754	2646	117.3
WEST SIDE STATION			
COLUMNS			
W.S., 2, A			
3			
4	8		
5	3		
6			
7			
8			
9			
10		38	3.7
11			
W.S., 12, A	14		
W.S., 13, A			
14	10		
15	11		
16	4		
17	2		
18			
19			
20	2		
21	4		
22	2		
23			
24			
25			
26			
27	3		
28	3		
29	5		
30		*	
W.S., 31, A	4		
W.S., 1, B	2		
2			
3			
4			
5	3		
6	6		
7			
8			
9			
10			
11			
12	4		
13			
14			
15			
16			
17			
18			
19			
20			
21			
22	4		
23			
24	10		
25	2		
26			
27			
28			
29	4		
30	12		
W.S., 31, B	10		
W.S., 2, C		53	7.2
3			
4			

FHWA REGION	STATE	PROJECT	
5	OHIO		

156/412

CUYAHOGA COUNTY
CUY – 6 – 14.99

MEMBER LOCATION	REPAIRING CONCRETE STRUCTURES PATCH SQ. FT.	REPLACE CU. FT.	REPAIR OF CRACKS LIN. FT.
5			
6	1		
7			
8	2		
9			
10	4		
11	2		
12	7		
13	18		
14	11		
15			
16			
17			
18	3		
19			
20	15		
21	4		
22	4		
W.S., 23 C			
(SUBTOTAL WEST SIDE STATION)			
	203	91	10.9
(PAGE TOTAL)			
	7025	6021	149.8

* – Denotes locations where column bases are to be repaired under Item Special, Repair Column Bases.

** – Quantity for Roof Slab Repair east of expansion joint between Detroit Ave. Tunnel and West Station is included with the West Station Roof Slab Quantity W.S.,1–4.

*** – Quantity for Roof Slab Repair east of expansion joint between West 25th St. Tunnel and West Station is included with the West Station Roof Slab Quantity W.S.,4–8.

COUNTY BRIDGE NO. 84

HOWARD NEEDLES TAMMEN & BERGENDOFF
ARCHITECTS ENGINEERS PLANNERS
HNTB

ESTIMATED REPAIR QUANTITIES
BR. NO. CUY – 6 – 1499
REHABILITATION OF
VETERANS MEMORIAL BRIDGE
(U.S. 6, 20, 42 & S.R. 3 OVER CUYAHOGA RIVER)

CLEVELAND CUYAHOGA COUNTY OHIO

DRAWN R.S.Y.	TRACED R.S.Y.	CHECKED R.A.S.	REVIEWED C.A.B.	REVISED
DATE 11/24/93	DATE 11/24/93	DATE 11/24/93	DATE 3/31/94	SHEET 24/270

\11646\CONCRETE\VMTAB1.DWG

MEMBER LOCATION	REPAIRING CONCRETE STRUCTURES		REPAIR OF CRACKS
	PATCH	REPLACE	
	SQ. FT.	CU. FT.	LIN. FT.
WEST SIDE STATION(CONTINUED)			
W.S., 24, C	2		
25	3		
26	18		
27			
28			
29		*	
30		*	
W.S., 31, C		*	
W.S., 4, D	2		
5	3		
6			
7			
8	16		
9			
10		38	7.3
11	15		
12			
13			
14			
15			
16			
17			
18	17		
19			
20			
21	16		
22	10		
23			
24	6		
25	10		
26	2		
27	6		
28	6		
29		43	7.3
30		44	7.3
W.S., 31, D		*	
W.S., 6, E			
7			
8		38	3.7
9		38	3.7
10			
11	12		
12	3		
13			
14			
15			
16			
17	2		
18			
19			
20			
21			
22			
23			
24	3		
25			
26	8		
27	8		
28		43	
29		43	
30		44	
W.S., 31, E		44	
W.S., 16, F			
17			
21			
22	5		
23			
24	8		
25			
26			
27			
28		27	
29		27	
30		28	
W.S., 31, F		28	

MEMBER LOCATION	REPAIRING CONCRETE STRUCTURES		REPAIR OF CRACKS
	PATCH	REPLACE	
	SQ. FT.	CU. FT.	LIN. FT.
W.S., 2, G			
3			
W.S., 4, G			
W.S., 3, H	10		
4			
5			
W.S., 6, H	6		
JACK ARCHES			
W.S., 2 – 3, A	14		
3 – 4	17		
4 – 5	4		
5 – 6	3		
6 – 7	4		
7 – 8			
8 – 9	2		
9 – 10	14		
10 – 11	5	84	17
11 – 12	14		
12 – 13	8	55	16.5
13 – 14		84	29
14 – 15	12	55	14.5
15 – 16	16		
16 – 17	22		
17 – 18	3		
18 – 19	12	26	10
19 – 20	12		
20 – 21	20	26	4
21 – 22	4		
22 – 23	9		
23 – 24	5		
24 – 25	5		
25 – 26	4		
26 – 27	4		
27 – 28			
28 – 29	8		
29 – 30	8		
30 – 31			
W.S., 31 – 1A, A	10		
W.S., 1 – 2, B	15		
2 – 3			
3 – 4			3
4 – 5	4		
5 – 6			
6 – 7			
7 – 8			
8 – 9	6	22	8
9 – 10	3		
10 – 11	15	22	2
11 – 12	8		
12 – 13	4	22	8
13 – 14			
14 – 15	4	22	6
15 – 16			
16 – 17	15		
17 – 18			
18 – 19	12		
19 – 20			
20 – 21	25	22	4
21 – 22			
22 – 23	6		
23 – 24	3		
24 – 25	12		
25 – 26	2		
26 – 27	16		
27 – 28			
28 – 29	12		
29 – 30			
30 – 31			
W.S., 31 – 1A, B	11		
W.S., 1 – 2, C	10	81	
2 – 3	5		
3 – 4			
4 – 5	6		
5 – 6			
6 – 7			
7 – 8	4		

MEMBER LOCATION	REPAIRING CONCRETE STRUCTURES		REPAIR OF CRACKS
	PATCH	REPLACE	
	SQ. FT.	CU. FT.	LIN. FT.
8 – 9	5		
9 – 10	5		
10 – 11	20	22	2
11 – 12	6		
12 – 13	8	22	8
13 – 14	10		
14 – 15	20	22	6
15 – 16			
16 – 17	12		
17 – 18			
18 – 19	14		
19 – 20			
20 – 21	26	22	
21 – 22			
22 – 23	15		
23 – 24	2		
24 – 25	5		
25 – 26			
26 – 27	18		
27 – 28	4		
28 – 29	21		
29 – 30	2		
30 – 31	3		
W.S., 31 – 1A, C	12		
W.S., 4 – 5, D			
5 – 6	2		
6 – 7			
7 – 8			
8 – 9		22	8
9 – 10	3		2
10 – 11	5	22	2
11 – 12			
12 – 13	15		5
13 – 14	3		5
14 – 15	6		5
15 – 16			
16 – 17	6		5
17 – 18			
18 – 19	6		4
19 – 20	2		
20 – 21		22	4
21 – 22			
22 – 23	8		10
23 – 24			
24 – 25	3		5
25 – 26	5		
26 – 27	9		15
27 – 28	8		10
28 – 29	16		10
29 – 30	8		15
30 – 31			
W.S., 31 – 1A, D	5		10
W.S., 6 – 7, E	2		10
7 – 8	5		
8 – 9		74	25.8
9 – 10	8		10
10 – 11	2		5
11 – 12	6		10
12 – 13	5		10
13 – 14	3		
14 – 15	3		
15 – 16	3		
16 – 17	5		10
17 – 18	3		
18 – 19	3		10
19 – 20	3		
20 – 21		22	
21 – 22			
22 – 23			8
23 – 24			
24 – 25	4		4
25 – 26			4
26 – 27	6		15
27 – 28	6	39	15
28 – 29		77	
29 – 30		77	

MEMBER LOCATION	REPAIRING CONCRETE STRUCTURES		REPAIR OF CRACKS
	PATCH	REPLACE	
	SQ. FT.	CU. FT.	LIN. FT.
30 – 31,		56	
W.S., 31 – 1A, E		28	
W.S., 20 – 21, F	4		
21 – 22			
22 – 23			
23 – 24			
24 – 25			
25 – 26	5		
26 – 27	6		
27 – 28	6	29	
28 – 29		57	
29 – 30		57	
30 – 31		41	
W.S., 31 – 1A, F		20	
W.S., 2 – 3, G	6	48	19.3
3 – 4			
W.S., 4 – 5, G	2		
W.S., 3 – 4, H	2		
4 – 5	20		
5 – 6			
W.S., 6 – 7, H			
WALLS			
W.S., N 1 – 2,			
2 – 3			
3 – 4			
4 – 5			
5 – 6			
6 – 7			
7 – 8			
8 – 9			
9 – 10			
10 – 11			
11 – 12			
12 – 13			
13 – 14			
14 – 15			
15 – 16			
16 – 17			
17 – 18			
18 – 19			
19 – 20			
20 – 21			
21 – 22	60		
22 – 23	25		
23 – 24	6		
24 – 25	30		
25 – 26	8		
26 – 27	25		
27 – 28	60		
28 – 29	50		
29 – 30	20		
W.S., N 30 – 1A	105	138	
W.S., S 6 – 7			
7 – 8			
8 – 9			
9 – 10			
10 – 11			
11 – 12			
12 – 13			
13 – 14			
14 – 15			
15 – 16			
16 – 17			
17 – 18			
18 – 19			
19 – 20			
20 – 21			
21 – 22	10		
22 – 23			
23 – 24			
24 – 25	5		
25 – 26			
26 – 27			6
27 – 28		459	
28 – 29		581	
29 – 30		585	

FHWA REGION	STATE	PROJECT	
5	OHIO		

157/412

CUYAHOGA COUNTY
CUY – 6 – 14.99

MEMBER LOCATION	REPAIRING CONCRETE STRUCTURES		REPAIR OF CRACKS
	PATCH	REPLACE	
	SQ. FT.	CU. FT.	LIN. FT.
30 – 31		417	
W.S., S 31 – 1A		241	
(SUBTOTAL WEST SIDE STATION)			
	1474	4206	444.4
(PAGE TOTAL)			
	1474	4206	444.4

* – Denotes locations where column bases are to be repaired under Item Special, Repair Column Bases.

COUNTY BRIDGE NO. 84

HOWARD NEEDLES TAMMEN & BERGENDOFF
ARCHITECTS ENGINEERS PLANNERS
HNTB

ESTIMATED REPAIR QUANTITIES
BR. NO. CUY – 6 – 1499
REHABILITATION OF
VETERANS MEMORIAL BRIDGE
(U.S. 6, 20, 42 & S.R. 3 OVER CUYAHOGA RIVER)
CLEVELAND CUYAHOGA COUNTY OHIO

DRAWN R.S.Y.	TRACED R.S.Y.	CHECKED R.A.S.	REVIEWED C.A.B.	REVISED
DATE 11/24/93	DATE 11/24/93	DATE 11/24/93	DATE 3/31/94	SHEET 25/270

\11646\CONCRETE\WMTAB2.DWG

MEMBER LOCATION	REPAIRING CONCRETE STRUCTURES PATCH SQ. FT.	REPLACE CU. FT.	REPAIR OF CRACKS LIN. FT.
WEST SIDE STATION(CONTINUED)			
UPPER DECK FLOORBEAM			
W.S., 32		492	
BULKHEAD		844	
ROOF SLAB			
W.S., 1 – 4	200	945	
4 – 8	200	469	
8 – 10	200	259	
10 – 12	100	633	
12 – 14	100	325	
14 – 16	100	248	
16 – 18	100	238	
18 – 20	100	79	
20 – 22	100	1131	
22 – 24	120	73	
24 – 26	120	69	
26 – 28	120	99	
W.S., 28 – 31	120	1237	
(SUBTOTAL WEST SIDE STATION)			
	1680	7141	0
(WEST SIDE STATION TOTAL)			
	3357	11438	455.3
TOWER A			
NORTH TOWER	89	246	
SOUTH TOWER	36	978	10
(TOWER A TOTAL)			
	125	1224	10
SPAN 1A			
UPPER DECK FLOORBEAMS (INCLUDING CANTILEVERS)			
1A, 1A,		470	
1	2	169	
2	6	73	
3	4	73	
4	6	74	
5	8	74	
6	2	75	
7	15	75	
8	4	75	
9			
1A, 10		459	
UPPER DECK JACK ARCHES			
1A, 1A– 1, N.E.		21	
1 – 2			
2 – 3			
3 – 4			
4 – 5			
5 – 6			
6 – 7			
7 – 8			
1A, 8 –10, N.E.		26	
1A, 1A– 1, N.C.		15	
1 – 2,	8		
2 – 3			
3 – 4			
4 – 5			
5 – 6	4		
6 – 7			
7 – 8	2		
1A, 8 –10, N.C.	2		
1A, 1A– 1, N.I.	6		
1 – 2	2		
2 – 3	2		
3 – 4	8		
4 – 5	6		
5 – 6	6		
6 – 7		26	
7 – 8	4		
8 – 9			
1A, 9 –10, N.I.			
1A, 1A– 1, S.I.			
1 – 2	6		
2 – 3	8		
3 – 4	9		
4 – 5	4		
5 – 6			
6 – 7	4		

MEMBER LOCATION	REPAIRING CONCRETE STRUCTURES PATCH SQ. FT.	REPLACE CU. FT.	REPAIR OF CRACKS LIN. FT.
7 – 8	3		
8 – 9	6		
1A, 9 –10, S.I.			
1A, 1A– 1, S.C.		48	
1 – 2,	4		
2 – 3	2		
3 – 4	6		
4 – 5			
5 – 6			
6 – 7	3		
7 – 8	6		
1A, 8 –10, S.C.	6		
1A, 1A– 1, S.E.		48	
1 – 2			
2 – 3			
3 – 4			
4 – 5			
5 – 6			
6 – 7	2		
7 – 8			
1A, 8 –10, S.E.		26	
UPPER DECK COLUMNS			
1A, 1A, N.E.		88	
1	12		
2		31	5.8
3	9		
4	8		
5	4		
6		31	5.8
7	9		
8	14		
1A, 10, N.E.		31	
1A, 1A, N.C.		72	
1	8		
2	5		
3	4		
4	12		
5	18		
6	12		
7	6		
8	4		
1A, 10, N.C.	8	31	
1A, 1A, N.I.		31	
1	2		
2	3		
3	2		
4			
5	4		
6	4		
7	3		
8	6		
9	9		
1A, 10, N.I.		31	
1A, 1A, S.I.		31	
1		31	2.9
2	4		
3			
4	6		
5	8		
6	8		
7	8		
8	6		
9	6		
1A, 10, S.I.		31	
1A, 1A, S.C.		58	
1		10	
2	4		
3	20		
4	6		
5	6		
6	4		
7	6		
8	6		
1A, 10, S.C.		31	
1A, 1A, S.E.		71	
1		36	

MEMBER LOCATION	REPAIRING CONCRETE STRUCTURES PATCH SQ. FT.	REPLACE CU. FT.	REPAIR OF CRACKS LIN. FT.
2			
3		31	5.8
4	2		
5	2		
6	5		
7	13		
8	6		
1A, 10, S.E.	5		
LOWER DECK EXTERIOR RAILING			
1A, 1 – 2, N.E.	6		
2 – 3			
3 – 4			
4 – 5			
5 – 6			
6 – 7			
7 – 8			
1A, 8 –10, N.E.			
1A, 1 – 2, S.E.		33	
2 – 3	2		
3 – 4			
4 – 5			
5 – 6			
6 – 7			
7 – 8			
1A, 8 –10, S.E.	2		
LOWER DECK INTERIOR RAILING			
1A, 1A– 1, N.I.			
1 – 2			
2 – 3			
3 – 4			
4 – 5			
5 – 6			
6 – 7			
7 – 8	2		
1A, 8 – 9, N.I.	1		
1A, 1A– 1, S.I.		16	
1 – 2	3		
2 – 3			
3 – 4			
4 – 5			
5 – 6			
6 – 7			
7 – 8	1		
1A, 8 – 9, S.I.	2		
WALLS BETWEEN CENTRAL COLUMNS			
1A, 1 – 2, N.C.	15		
2 – 3	30		
3 – 4	5		
4 – 5			
5 – 6			
6 – 7	2		
7 – 8			
1A, 8 –10, N.C.			
1A, 1 – 2, S.C.	45		
2 – 3	26		
3 – 4	10		
4 – 5	30		
5 – 6	17		
6 – 7	20		
7 – 8	20		
1A, 8 –10, S.C.	20		
SOUTH EXTERIOR WALL BELOW LOWER DECK			
EXTERIOR FACE	40		
(SPAN 1A TOTAL)			
	762	2552	20.3
TOWER B			
NORTH TOWER	30	288	
SOUTH TOWER	440	288	
FLOORBEAMS		REMOVED	
U.D. SHAFT(N.C.)		REMOVED	
U.D. SHAFT(N.I.)		REMOVED	
U.D. SHAFT(S.I.)		REMOVED	
U.D. SHAFT(S.C.)		REMOVED	
(TOWER B TOTAL)			
	470	576	0

MEMBER LOCATION	REPAIRING CONCRETE STRUCTURES PATCH SQ. FT.	REPLACE CU. FT.	REPAIR OF CRACKS LIN. FT.
SPAN 1B			
UPPER DECK FLOORBEAMS (INCLUDING CANTILEVERS)			
1B, 1		458	
2		491	
3	46		
4		451	
5	31	217	
6	21	209	
7		200	
8	1	192	
9	7	184	
10	16		
11	4	167	
1B, 12		366	
UPPER DECK JACK ARCHES			
1B, 1 – 2, N.E.	4	26	
2 – 3	4		
3 – 4			
4 – 5			
5 – 6		30	
6 – 7	2		
7 – 8	2		
8 – 9	2		
9 –10	2		
10 –11	4		
1B, 11 –12, N.E.	4	26	
1B, 1 – 2, N.I.		27	
2 – 3	1		
3 – 4	4		
4 – 5	3		
5 – 6	1		
6 – 7			
7 – 8		27	
8 – 9		27	
9 –10		27	
10 –11		27	
1B, 11 –12, N.I.		23	
1B, 1 – 2, S.I.	3	23	
2 – 3			
3 – 4	3		
4 – 5	4		
5 – 6	3		
6 – 7	5		2
7 – 8		27	
8 – 9		27	
9 –10		27	
10 –11		27	
1B, 11 –12, S.I.		23	
1B, 1 – 2, S.E.	1	26	
2 – 3	3		
3 – 4	1		
4 – 5		30	
5 – 6		30	
6 – 7		30	
7 – 8		30	
8 – 9		30	
9 –10	3		
10 –11		30	
1B, 11 –12, S.E.		26	
UPPER DECK COLUMNS			
1B, 1, N.E.			
2	4		
3	4		
4	5		
5	2		
6	2		
7	2		
8	2		
9	2		
10	2		
11	4		
1B, 12, N.E.		31	
(SUBTOTAL SPAN 1B)			
	214	3592	2
(PAGE TOTAL)			
	3251	15162	32.3

FHWA REGION	STATE	PROJECT	
5	OHIO		

158/412

CUYAHOGA COUNTY
CUY – 6 – 14.99

MEMBER LOCATION	REPAIRING CONCRETE STRUCTURES PATCH SQ. FT.	REPLACE CU. FT.	REPAIR OF CRACKS LIN. FT.

COUNTY BRIDGE NO. 84

HOWARD NEEDLES TAMMEN & BERGENDOFF
ARCHITECTS ENGINEERS PLANNERS
HNTB

ESTIMATED REPAIR QUANTITIES
BR. NO. CUY – 6 – 1499
REHABILITATION OF
VETERANS MEMORIAL BRIDGE
(U.S. 6, 20, 42 & S.R. 3 OVER CUYAHOGA RIVER)
CLEVELAND CUYAHOGA COUNTY OHIO

DRAWN R.S.Y.	TRACED R.S.Y.	CHECKED W.J.V.	REVIEWED C.A.B.	REVISED
DATE 9/30/93	DATE 9/30/93	DATE 9/30/93	DATE 3/31/94	SHEET 26/270

\11646\CONCRETE\VMTAB3.DWG

MEMBER LOCATION	REPAIRING CONCRETE STRUCTURES		REPAIR OF CRACKS
	PATCH	REPLACE	
	SQ. FT.	CU. FT.	LIN. FT.
SPAN 1B(CONTINUED)			
UPPER DECK COLUMNS(CONTINUED)			
1B, 1, N.C.		32	
1B, 1, N.I.		33	
2			
3			
4			
5			
6	2		
7	5		
8	7		
9			
10	2		
11	7		
12		33	
1B, 1, S.I.		33	
2	7		
3	8		
4	7		
5	8		
6	14		
7	3		
8	9		
9	12		
10	7		
11	10		
12		33	
1B, 1, S.C.		32	
1B, 1, S.E.			
2			
3	2		
4		31	
5	4		
6	10		
7	7		
8	15		
9	3		
10	3		
11	3		
12		31	
LOWER DECK EXTERIOR RAILING			
1B, 1 – 2,N.E.	4		
2 – 3			
3 – 4	3		
4 – 5			
5 – 6			
6 – 7	1		
7 – 8			
8 – 9	3		
9 – 10			
10 – 11			
11 – 12	2		
1B, 1 – 2,S.E.	8		
2 – 3			
3 – 4	5		2
4 – 5	2		5
5 – 6	3		2
6 – 7	2		2
7 – 8	1		
8 – 9	3		
9 – 10	3		
10 – 11			
11 – 12			3
LOWER DECK INTERIOR RAILING			
1B, 1 – 2,N.I.	2		
2 – 3			
3 – 4	1		
4 – 5	1		
5 – 6	1		
6 – 7	3		
7 – 8	3		
8 – 9	2		
9 – 10	4		
10 – 11	2		
11 – 12	4		
1B, 1 – 2,S.I.			

MEMBER LOCATION	REPAIRING CONCRETE STRUCTURES		REPAIR OF CRACKS
	PATCH	REPLACE	
	SQ. FT.	CU. FT.	LIN. FT.
2 – 3			
3 – 4	1		
4 – 5	1		
5 – 6			
6 – 7			
7 – 8			
8 – 9	1		
9 – 10	1		
10 – 11			
11 – 12	2		
WALLS BELOW LOWER DECK			
EXTERIOR N. WALL			
EXTERIOR S. WALL			
	(SUBTOTAL SPAN 1B)		
	224	258	14
	(SPAN 1B TOTAL)		
	438	3850	16
WEST ABUTMENT			
FLOORBEAMS		REMOVED	
UPPER SHAFTS			
N.E.		469	
N.I.		REMOVED	
S.I.		REMOVED	
S.E.		469	
ABUTMENT BASE	197	1283	
	(WEST ABUTMENT TOTAL)		
	197	2221	0
SPAN 1			
UPPER DECK FLOORBEAMS			
1, 1		366	
2		296	
3		148	
4	3	148	
5			
6	5	148	
7	12	148	
8	11	148	
9		296	
10		296	
11		296	
12		296	
13		369	
UPPER DECK JACK ARCHES			
1, 1 – 2,N.E.		26	
2 – 3	3		
3 – 4			
4 – 5			
5 – 6	6		
6 – 7	4		
7 – 8	4		
8 – 9	4		
9 – 10		30	
10 – 11		30	
11 – 12		30	
12 – 13		26	
1, 1 – 2,N.I.		23	
2 – 3		27	
3 – 4			
4 – 5	2		
5 – 6		27	
6 – 7		27	
7 – 8		27	
8 – 9	9		
9 – 10		27	
10 – 11			
11 – 12			
12 – 13		23	
1, 1 – 2,S.I.		23	
2 – 3		27	
3 – 4		27	
4 – 5		27	
5 – 6		27	
6 – 7		27	
7 – 8		27	
8 – 9		27	
9 – 10		27	

MEMBER LOCATION	REPAIRING CONCRETE STRUCTURES		REPAIR OF CRACKS
	PATCH	REPLACE	
	SQ. FT.	CU. FT.	LIN. FT.
10 – 11		27	
11 – 12		27	
12 – 13		23	
1, 1 – 2,S.E.		26	
2 – 3		30	
3 – 4		30	
4 – 5			
5 – 6	8		
6 – 7		30	
7 – 8		30	
8 – 9		30	
9 – 10		30	
10 – 11		30	
11 – 12		30	
12 – 13		26	
UPPER DECK COLUMNS			
1, 1, N.E.		31	
2	3		
3	2		
4	4		
5	2		
6	3		
7	4		
8	2		
9	2		
10	3		
11	2		
12	2		
13		31	
1, 1, N.I.		42	
2		33	2.9
3	9		
4	4		
5	5		
6	2		
7	4		
8	2		
9	3		
10	4		
11	16		
12		33	2.9
13		42	
1, 1, S.I.		42	
2	17		
3		33	2.9
4			
5	3		3
6	4		
7	16		
8		33	2.9
9		33	2.9
10	9		
11	6		
12			
13		42	
1, 1, S.E.		31	
2	4		
3			
4	2		
5	2		
6	6		
7	1		
8	3		
9			
10	3		
11	2		
12	4		
13		31	
LOWER DECK EXTERIOR RAILING			
1, 1 – 2,N.E.		31	
2 – 3			17.8
3 – 4			19.8
4 – 5	2		35.8
5 – 6			19.8
6 – 7			15.8
7 – 8	1		16.8

MEMBER LOCATION	REPAIRING CONCRETE STRUCTURES		REPAIR OF CRACKS
	PATCH	REPLACE	
	SQ. FT.	CU. FT.	LIN. FT.
8 – 9			23.8
9 – 10		31	
10 – 11			25.8
11 – 12			25.8
12 – 13	2		18.8
1, 1 – 2,S.E.		31	
2 – 3	1		23.8
3 – 4	2		18.8
4 – 5	2		25.8
5 – 6			25.8
6 – 7			21.8
7 – 8	3		25.8
8 – 9	1		20.8
9 – 10	2		35.8
10 – 11	2		15.8
11 – 12	3		29.8
12 – 13		31	
LOWER DECK INTERIOR RAILING			
1, 1 – 2,N.I.		19	
2 – 3		19	
3 – 4	2		
4 – 5	6		
5 – 6	7		
6 – 7	4		
7 – 8	2		
8 – 9	4		
9 – 10	6		
10 – 11		19	
11 – 12		19	
12 – 13		19	
1, 1 – 2,S.I.		19	
2 – 3	5		
3 – 4	4		
4 – 5	5		
5 – 6	1		
6 – 7	3		
7 – 8		19	
8 – 9		19	
9 – 10	6		
10 – 11	1		
11 – 12	1		
12 – 13		19	
LOWER DECK FLOORBEAMS			
1, 1	56	243	
2	123		10
3	55		10
4	54		5
5	68		10
6	68		
7	73		5
8	35		
9	56	243	3
10	41	243	15
11	136		
12	123		10
13	21	503	
LOWER DECK FLOORBEAM CORBELS			
1, 1		N,S	
2		N,S	
3		N	
4		S	
5		S	
6		S	
7	2		
8	2		
9	3		
10	1	N	
11		N,S	
12		N	
13		N,S	

FHWA REGION	STATE	PROJECT	
5	OHIO		

159/412

CUYAHOGA COUNTY
CUY – 6 – 14.99

MEMBER LOCATION	REPAIRING CONCRETE STRUCTURES		REPAIR OF CRACKS
	PATCH	REPLACE	
	SQ. FT.	CU. FT.	LIN. FT.
LOWER DECK JACK ARCHES			
1, 1 – 2,N.E.		31	
2 – 3		31	
3 – 4		31	
4 – 5		31	
5 – 6		31	
6 – 7		31	
7 – 8	5		3
8 – 9	7		
9 – 10		31	
10 – 11		31	
11 – 12		31	
12 – 13		31	
	(SUBTOTAL SPAN 1)		
	1238	6180	552.5
	(PAGE TOTAL)		
	1659	8659	566.5

NOTES:
N – DENOTES CORBEL REPLACEMENT, NORTH SIDE
S – DENOTES CORBEL REPLACEMENT, SOUTH SIDE

COUNTY BRIDGE NO. 84

HOWARD NEEDLES TAMMEN & BERGENDOFF
ARCHITECTS ENGINEERS PLANNERS
HNTB

ESTIMATED REPAIR QUANTITIES
BR. NO. CUY – 6 – 1499
REHABILITATION OF
VETERANS MEMORIAL BRIDGE
(U.S. 6, 20, 42 & S.R. 3 OVER CUYAHOGA RIVER)
CLEVELAND CUYAHOGA COUNTY OHIO

DRAWN	TRACED	CHECKED	REVIEWED	REVISED
R.S.Y	R.S.Y	W.J.V.	C.A.B.	
DATE 9/30/93	DATE 9/30/93	DATE 9/30/93	DATE 3/31/94	SHEET 27/270

\11646\CONCRETE\WMTAB4.DWG

MEMBER LOCATION	REPAIRING CONCRETE STRUCTURES PATCH SQ. FT.	REPAIRING CONCRETE STRUCTURES REPLACE CU. FT.	REPAIR OF CRACKS LIN. FT.
SPAN 1(CONTINUED)			
LOWER DECK JACK ARCHES(CONTINUED)			
1, 1 – 2,N.I.		27	
2 – 3		27	
3 – 4			
4 – 5		27	
5 – 6			
6 – 7			
7 – 8	4		5
8 – 9			
9 – 10		27	
10 – 11			
11 – 12		27	
12 – 13		27	
1, 1 – 2,S.I.		27	
2 – 3		27	
3 – 4		27	
4 – 5		27	
5 – 6			
6 – 7			
7 – 8			
8 – 9			
9 – 10		27	
10 – 11		27	
11 – 12		27	
12 – 13		27	
1, 1 – 2,S.E.		31	
2 – 3		31	
3 – 4		31	
4 – 5		31	
5 – 6		31	
6 – 7			
7 – 8			
8 – 9			
9 – 10		31	
10 – 11			
11 – 12		31	
12 – 13		31	
LOWER DECK COLUMNS			
1, 1, N.E.			
2	20		
3	2		
4	15		
5	12		
6	2		
7	2		
8	2		
9	2		
10	4		
11	26		
12	25		
13	21		
1, 1, N.I.	5		2
2	5		
3			
4	4		
5			
6			
7			
8			
9			
10			
11	9		
12	2		
13	36		
1, 1, S.I.	122		
2	11		
3			
4	9		
5			
6			
7			
8			
9			
10			
11	5		

MEMBER LOCATION	REPAIRING CONCRETE STRUCTURES PATCH SQ. FT.	REPAIRING CONCRETE STRUCTURES REPLACE CU. FT.	REPAIR OF CRACKS LIN. FT.
12			
13	5		
1, 1, S.E.		153	
2	15		
3			
4	8		
5			
6			
7			
8			
9			
10			
11	27		
12	14		10
13	24		15
ARCH RIBS			
1, 1–13, N.E.	350		
1, 1–13, N.I.	77		10
1, 1–13, S.I.	145		
1, 1–13, S.E.	90		
	(SUBTOTAL SPAN 1)		
	1100	779	42
	(SPAN 1 TOTAL)		
	2338	6959	594.5
PIER 1			
FLOORBEAMS		REMOVED	
UPPER SHAFTS			
N.E.		496	
N.I.		REMOVED	
S.I.		REMOVED	
S.E.		496	
LOWER WALL	178	4931	
ARCH BASE	1963		
	(PIER 1 TOTAL)		
	2141	5923	0
SPAN 2			
UPPER DECK FLOORBEAMS			
2, 1,		369	
2		149	
3	2	149	
4		149	
5		149	
6	13		
7			
8	6		
9	2		
10	21		
11		149	
12		149	
13	1		
14		149	
15	22		
16		373	
UPPER DECK JACK ARCHES			
2, 1 – 2,N.E.		27	
2 – 3	4		
3 – 4		31	
4 – 5	4		
5 – 6	2		
6 – 7	2		2
7 – 8	2		
8 – 9	3		
9 – 10	2		
10 – 11	2		
11 – 12			
12 – 13			
13 – 14	3		

MEMBER LOCATION	REPAIRING CONCRETE STRUCTURES PATCH SQ. FT.	REPAIRING CONCRETE STRUCTURES REPLACE CU. FT.	REPAIR OF CRACKS LIN. FT.
14 – 15		31	
15 – 16	2	27	
2, 1 – 2,N.I.	2	25	
2 – 3	2		
3 – 4			
4 – 5	2		
5 – 6		29	
6 – 7	4		
7 – 8	7		
8 – 9	9		
9 – 10	7		
10 – 11	5		
11 – 12	2		
12 – 13	1		
13 – 14			
14 – 15			
15 – 16	1	25	
2, 1 – 2,S.I.	7	25	
2 – 3	2		
3 – 4			
4 – 5		29	
5 – 6		29	
6 – 7		29	
7 – 8	7		
8 – 9	2		
9 – 10		29	
10 – 11		29	
11 – 12	9		
12 – 13		29	
13 – 14		29	
14 – 15		29	
15 – 16		25	
2, 1 – 2,S.E.		27	
2 – 3		31	
3 – 4		31	
4 – 5		31	
5 – 6	1		
6 – 7	1		
7 – 8	1		
8 – 9	1		
9 – 10	1		
10 – 11	2		
11 – 12		31	
12 – 13	6		
13 – 14	4		
14 – 15		31	
15 – 16	2	27	
UPPER DECK COLUMNS			
2, 1, N.E.		31	
2	15		
3	6		
4			
5			
6			
7	2		
8	3		
9			
10			
11	4		
12			
13	2		
14			
15	2		
16		31	
2, 1, N.I.		42	
2		33	5.8
3		33	5.8
4		33	5.8
5		33	5.8
6	1		
7	8		
8	1		
9			
10	5		
11	1		
12	1		

MEMBER LOCATION	REPAIRING CONCRETE STRUCTURES PATCH SQ. FT.	REPAIRING CONCRETE STRUCTURES REPLACE CU. FT.	REPAIR OF CRACKS LIN. FT.
13		33	5.8
14	17		
15	14		
16		42	
2, 1, S.I.		42	
2		33	2.9
3		33	2.9
4	11		
5	1		
6	3		
7			
8	1		
9			
10	1		
11	7		
12	1		
13		33	5.8
14	19		
15	5		
16		42	
2, 1, S.E.		31	
2			
3			
4			
5			2
6			
7			
8			
9			
10			
11	3		
12			
13			2
14		31	
15			2
16		31	
LOWER DECK EXTERIOR RAILING			
2, 1 – 2,N.E.	1		16.6
2 – 3			18.6
3 – 4			29.6
4 – 5	10		36.6
5 – 6	10		24.6
6 – 7	10		19.6
7 – 8	7		21.6
8 – 9	3		20.6
9 – 10	4		29.6
10 – 11	3		25.6
11 – 12			19.6
12 – 13			34.6
13 – 14			16.6
14 – 15			16.6
15 – 16			16.6
2, 1 – 2,S.E.		32	
2 – 3	10		31.6
3 – 4	5		26.6
4 – 5	4		18.6
5 – 6	9		20.6
6 – 7	8		35.6
7 – 8	2		17.6
8 – 9	6		16.6
9 – 10	2		23.6
10 – 11	4		16.6
11 – 12			16.6
12 – 13	1		39.6
13 – 14	3		24.6
14 – 15	6		25.6
15 – 16		32	
LOWER DECK INTERIOR RAILING			
2, 1 – 2,N.I.		20	
2 – 3		20	
3 – 4		20	
4 – 5		20	
5 – 6		20	
6 – 7			

FHWA REGION	STATE	PROJECT	
5	OHIO		

160
412

CUYAHOGA COUNTY
CUY – 6 – 14.99

MEMBER LOCATION	REPAIRING CONCRETE STRUCTURES PATCH SQ. FT.	REPAIRING CONCRETE STRUCTURES REPLACE CU. FT.	REPAIR OF CRACKS LIN. FT.
LOWER DECK INTERIOR RAILING(CONTINUED)			
7 – 8			
8 – 9		20	
9 – 10			
10 – 11			
11 – 12	3		
12 – 13		20	
13 – 14			
14 – 15		20	
15 – 16		20	
2, 1 – 2,S.I.		20	
2 – 3		20	
3 – 4	6		
4 – 5	6		
5 – 6		20	
6 – 7		20	
7 – 8		20	
8 – 9	7		
9 – 10	3		
10 – 11	2		
11 – 12	7		
12 – 13		20	
13 – 14		20	
14 – 15	4		
15 – 16		20	
	(SUBTOTAL SPAN 2)		
	461	3462	709.4
	(PAGE TOTAL)		
	3702	10164	751.4

COUNTY BRIDGE NO. 84

HOWARD NEEDLES TAMMEN & BERGENDOFF
ARCHITECTS ENGINEERS PLANNERS
HNTB

ESTIMATED REPAIR QUANTITIES
BR. NO. CUY – 6 – 1499
REHABILITATION OF
VETERANS MEMORIAL BRIDGE
(U.S. 6, 20, 42 & S.R. 3 OVER CUYAHOGA RIVER)
CLEVELAND CUYAHOGA COUNTY OHIO

DRAWN R.S.Y.	TRACED R.S.Y.	CHECKED W.J.V.	REVIEWED C.A.B.	REVISED
DATE 9/30/93	DATE 9/30/93	DATE 9/30/93	DATE 3/31/94	SHEET 28/270

\11646\CONCRETE\WMTAB5.DWG

FHWA REGION	STATE	PROJECT	
5	OHIO		

161
412

CUYAHOGA COUNTY
CUY – 6 – 14.99

MEMBER LOCATION	REPAIRING CONCRETE STRUCTURES PATCH SQ. FT.	REPAIRING CONCRETE STRUCTURES REPLACE CU. FT.	REPAIR OF CRACKS LIN. FT.
SPAN 2(CONTINUED)			
LOWER DECK FLOORBEAMS			
2, 1	8	486	7
2	91		5
3	83		25
4	67		10
5	52		18
6	101		
7	71		4
8	56		4
9	36		4
10	18		2
11	61		
12	58		
13	56		
14	19		
15	36		
16	85		
LOWER DECK FLOORBEAM CORBELS			
2, 1		N,S	
2		N,S	
3		N,S	
4	2	N	
5	2	N	
6		N	
7	2	N	
8	1	N	
9	2	N	
10	1	N	
11	1	N	
12	1	N	
13	3		
14	1	S	
15	2		
16		N,S	
LOWER DECK JACK ARCHES			
2, 1 – 2,N.E.		32	
2 – 3		32	
3 – 4		32	
4 – 5		32	
5 – 6		32	
6 – 7		32	
7 – 8	6		
8 – 9	5		
9 – 10		32	
10 – 11		32	
11 – 12		32	
12 – 13		32	
13 – 14	5		
14 – 15	8		
15 – 16		32	
2, 1 – 2,N.I.			
2 – 3	7		
3 – 4	5		
4 – 5		29	
5 – 6	5		
6 – 7		29	
7 – 8			
8 – 9	4		
9 – 10	4		

MEMBER LOCATION	REPAIRING CONCRETE STRUCTURES PATCH SQ. FT.	REPAIRING CONCRETE STRUCTURES REPLACE CU. FT.	REPAIR OF CRACKS LIN. FT.
10 – 11			
11 – 12	3		4
12 – 13		29	
13 – 14			
14 – 15			
15 – 16			
2, 1 – 2,S.I.		29	
2 – 3			6
3 – 4		29	
4 – 5	7		
5 – 6	2		
6 – 7		29	
7 – 8		29	
8 – 9			
9 – 10		29	
10 – 11			
11 – 12			8
12 – 13	3		
13 – 14			
14 – 15			
15 – 16	2		8
2, 1 – 2,S.E.		32	
2 – 3		32	
3 – 4		32	
4 – 5		32	
5 – 6			
6 – 7		32	
7 – 8	4		
8 – 9	4		
9 – 10		32	
10 – 11		32	
11 – 12			4
12 – 13		32	
13 – 14	8		
14 – 15	4		
15 – 16			
LOWER DECK COLUMNS			
2, 1, N.E.		237	
2	70		
3	40		3
4	15		
5	10		
6	5		
7	10		
8	5		
9			
10	10		5
11	25		10
12	10		
13			
14			
15			
16		272	
2, 1, N.I.	4		
2			
3	10		
4			
5			
6			
7			
8			
9			
10			
11			
12			
13			
14	2		
15			
16	28		
2, 1, S.I.	30		
2			
3			
4			
5			
6			
7			

MEMBER LOCATION	REPAIRING CONCRETE STRUCTURES PATCH SQ. FT.	REPAIRING CONCRETE STRUCTURES REPLACE CU. FT.	REPAIR OF CRACKS LIN. FT.
8			
9			
10			
11			
12			
13			
14			
15			
16	10		
2, 1, S.E.		237	
2	20		
3			
4			
5			
6	16		10
7			
8			
9			
10			
11			
12	4		
13			
14			
15			
16		272	
ARCH RIBS			
N.E.	125		10
N.I.	38		
S.I.	264		
S.E.	290		
	(SUBTOTAL SPAN 2)		
	2043	2344	147
	(SPAN 2 TOTAL)		
	2504	5806	856.4
PIER 2			
FLOORBEAMS		REMOVED	
UPPER SHAFTS			
N.E.		799	
N.I.		REMOVED	
S.I.		REMOVED	
S.E.		799	
LOWER WALL	216	8342	
ARCH BASE	1565		
	(PIER 2 TOTAL)		
	1781	9940	0
SPAN 3			
UPPER DECK FLOORBEAMS (INCLUDING CANTILEVERS)			
3, 1		373	
2	3	154	
3	5	154	
4	4	171	
5		173	
6	3	179	
7	2	184	
8	3	37	
9	13	41	
10	16	46	
11	16	50	
12	1	205	
13	21	56	
14	18	59	
15	34	61	
16	3	62	
17	12	63	
18		554	

MEMBER LOCATION	REPAIRING CONCRETE STRUCTURES PATCH SQ. FT.	REPAIRING CONCRETE STRUCTURES REPLACE CU. FT.	REPAIR OF CRACKS LIN. FT.
UPPER DECK JACK ARCHES			
3, 1 – 2 N.E.		27	
2 – 3	6		
3 – 4	2		
4 – 5	4		
5 – 6	2		
6 – 7			
7 – 8		31	
8 – 9	4		
9 – 10	2		
10 – 11	3		
11 – 12			
12 – 13			
13 – 14	3		
14 – 15			
15 – 16	3		
16 – 17		31	
17 – 18	5		
3, 1 – 2 N.I.		25	
2 – 3	2		
3 – 4			
4 – 5			
5 – 6			
6 – 7	2		
7 – 8			
8 – 9	3		
9 – 10	1		
10 – 11	1		
11 – 12	1		
12 – 13	4		
13 – 14		29	
14 – 15		29	
15 – 16		29	
16 – 17	1		
17 – 18 *		25	
3, 1 – 2 S.I.		25	
2 – 3		29	
3 – 4		29	
4 – 5		29	
5 – 6		29	
6 – 7		29	
7 – 8		29	
8 – 9		29	
9 – 10		29	
10 – 11	7		
11 – 12		29	
12 – 13			
13 – 14		29	
14 – 15		29	
15 – 16		29	
16 – 17	6		
17 – 18 *		25	
3, 1 – 2 S.E.		27	
2 – 3		31	
3 – 4		31	
4 – 5		31	
5 – 6		31	
6 – 7		31	
7 – 8		31	
8 – 9		31	
9 – 10	4		
10 – 11	1		
11 – 12	1		
12 – 13	1		
13 – 14	1		
14 – 15	1		
15 – 16	1		
16 – 17	1		
17 – 18	1		

MEMBER LOCATION	REPAIRING CONCRETE STRUCTURES PATCH SQ. FT.	REPAIRING CONCRETE STRUCTURES REPLACE CU. FT.	REPAIR OF CRACKS LIN. FT.
UPPER DECK COLUMNS			
3, 1 N.E.		31	
2	2		
3	8		
4	2		
	(SUBTOTAL SPAN 3)		
	240	3521	0
	(PAGE TOTAL)		
	4064	15805	147

NOTES:
N – DENOTES CORBEL REPLACEMENT, NORTH SIDE
S – DENOTES CORBEL REPLACEMENT, SOUTH SIDE
* – DENOTES NEW MEMBER

COUNTY BRIDGE NO. 84

HOWARD NEEDLES TAMMEN & BERGENDOFF
ARCHITECTS ENGINEERS PLANNERS
HNTB

ESTIMATED REPAIR QUANTITIES
BR. NO. CUY – 6 – 1499
REHABILITATION OF
VETERANS MEMORIAL BRIDGE
(U.S. 6, 20, 42 & S.R. 3 OVER CUYAHOGA RIVER)
CLEVELAND CUYAHOGA COUNTY OHIO

DRAWN R.S.Y.	TRACED R.S.Y.	CHECKED W.J.V.	REVIEWED C.A.B.	REVISED
DATE 9/30/93	DATE 9/30/93	DATE 10/1/93	DATE 3/31/94	SHEET 29/270

\11646\CONCRETE\WMTAB6.DWG

MEMBER LOCATION	REPAIRING CONCRETE STRUCTURES		REPAIR OF CRACKS
	PATCH	REPLACE	
	SQ. FT.	CU. FT.	LIN. FT.
SPAN 3(CONTINUED)			
UPPER DECK COLUMNS(CONTINUED)			
3, 5, N.E.	4		
6		20	5.8
7	2		
8		20	5.8
9	3		
10	1		
11	1		
12	3		
13	4		
14	3		
15	1		
16	1		
17			
18		31	
3, 1, N.I.		42	
2	8		
3		33	5.8
4		33	5.8
5		33	5.8
6		33	5.8
7		33	5.8
8		34	5.8
9			
10	8		
11	2		
12	3		
13	8		
14	1		
15	2		
16	2		
17	1		
18		42	
3, 1, S.I.		42	
2	9		
3	12		
4		33	2.9
5		33	2.9
6		33	2.9
7	19		
8		34	5.8
9		34	5.8
10	3		
11	4		
12		34	2.9
13	19		
14	5		
15	17		
16	1		
17	8		
18		42	
3, 1, S.E.		31	
2	2		
3	3		
4	3		
5		32	
6		32	
7		32	
8		32	
9		32	
10	4		
11	3		
12	2		
13	6		
14	5		
15	3		
16	3		
17	2		
18		31	
LOWER DECK EXTERIOR RAILING			
3, 1 – 2,N.E.		32	
2 – 3	2		23.6
3 – 4	10		39.6
4 – 5	15		26.6

MEMBER LOCATION	REPAIRING CONCRETE STRUCTURES		REPAIR OF CRACKS
	PATCH	REPLACE	
	SQ. FT.	CU. FT.	LIN. FT.
5 – 6		32	
6 – 7			16.6
7 – 8	1		17.6
8 – 9	8		18.6
9 – 10	6		19.6
10 – 11	4		23.6
11 – 12	2		16.6
12 – 13	2		26.6
13 – 14	5		23.6
14 – 15	14		20.6
15 – 16	5		27.6
16 – 17	2		16.6
17 – 18		32	
3, 1 – 2,S.E.		32	
2 – 3		32	
3 – 4	12		33.6
4 – 5	12		20.6
5 – 6		32	
6 – 7		32	
7 – 8		32	
8 – 9		32	
9 – 10	7		20.6
10 – 11	4		18.6
11 – 12	12		19.6
12 – 13	12		30.6
13 – 14	3		22.6
14 – 15	4		31.6
15 – 16	10		22.6
16 – 17	16		19.6
17 – 18		32	
LOWER DECK INTERIOR RAILING			
3, 1 – 2,N.I.		20	
2 – 3		20	
3 – 4		20	
4 – 5		20	
5 – 6		20	
6 – 7		20	
7 – 8		20	
8 – 9		20	
9 – 10	1		
10 – 11	2		
11 – 12			
12 – 13	2		
13 – 14	3		
14 – 15			
15 – 16	3		
16 – 17	2		
17 – 18 *		20	
3, 1 – 2,S.I.		20	
2 – 3	2		
3 – 4		20	
4 – 5		20	
5 – 6		20	
6 – 7		20	
7 – 8	4		
8 – 9		20	
9 – 10	2		
10 – 11	3		
11 – 12			
12 – 13		20	
13 – 14	5		
14 – 15			
15 – 16	9		
16 – 17	2		
17 – 18 *		20	
LOWER DECK FLOORBEAMS			
3, 1		767	
2	134		12
3	86		
4	65		12
5	52		
6	16		10
7	23		
8	37		
9	62		
10	22		

MEMBER LOCATION	REPAIRING CONCRETE STRUCTURES		REPAIR OF CRACKS
	PATCH	REPLACE	
	SQ. FT.	CU. FT.	LIN. FT.
11	24		
12	32		
13	31		
14	50		
15	96		
16	74		
17	40	261	12
18		767	
LOWER DECK FLOORBEAM CORBELS			
3, 1		N,S	
2		N,S	
3	2	N	
4		N,S	
5	1	S	
6	1	S	
7	1	S	
8		N,S	
9	1	S	
10	1	S	
11	5		
12	5		
13	1	N	
14	1	N	
15	2		
16	3		
17	3	N	
18		N,S	
LOWER DECK JACK ARCHES			
3, 1 – 2,N.E.		32	
2 – 3		32	
3 – 4		32	
4 – 5		32	
5 – 6		32	
6 – 7			
7 – 8			
8 – 9			
9 – 10	2		8
10 – 11			
11 – 12			
12 – 13		32	
13 – 14		32	
14 – 15		32	
15 – 16		32	
16 – 17		32	
17 – 18		32	
3, 1 – 2,N.I.		29	
2 – 3	5		
3 – 4	5		
4 – 5		29	
5 – 6			8
6 – 7			
7 – 8			
8 – 9			
9 – 10			
10 – 11			
11 – 12			
12 – 13		29	
13 – 14		29	
14 – 15		29	
15 – 16		29	
16 – 17		29	
17 – 18		29	
3, 1 – 2,S.I.		29	
2 – 3		29	
3 – 4		29	
4 – 5	5		
5 – 6	5		
6 – 7			
7 – 8			
8 – 9			
9 – 10			

MEMBER LOCATION	REPAIRING CONCRETE STRUCTURES		REPAIR OF CRACKS
	PATCH	REPLACE	
	SQ. FT.	CU. FT.	LIN. FT.
10 – 11			
11 – 12	3		10
12 – 13		29	
13 – 14		29	
14 – 15		29	
15 – 16		29	
16 – 17		29	
17 – 18		29	
3, 1 – 2,S.E.		32	
2 – 3		32	
3 – 4		32	
4 – 5		32	
5 – 6		32	
6 – 7	5		
7 – 8	6		
8 – 9			
9 – 10			
10 – 11			
11 – 12			10
12 – 13			
13 – 14		32	10
14 – 15		32	
15 – 16		32	
16 – 17		32	
17 – 18		32	
LOWER DECK COLUMNS			
3, 1, N.E.		309	
2	6		
3			
4			
5			
6			
7	2		
8 THRU 11			
12	2		
13			
14	5		
15	2		
16	4		
17			
18	80		
3, 1, N.I.	37		
2	8		
3			
4	15		
5	10		
6	3		
7			
8 THRU 11			
12	2		
13			
14	3		
15			
16	14		
17			
18	150		
3, 1, S.I.	14		
2	4		
3	2		
4	2		
5			
6	4		
7			
8 THRU 11			
12			
13	2		
14	2		
15	2		
16			
17	2		
18	120		

FHWA REGION	STATE	PROJECT	
5	OHIO		

162
412

CUYAHOGA COUNTY
CUY – 6 – 14.99

MEMBER LOCATION	REPAIRING CONCRETE STRUCTURES		REPAIR OF CRACKS
	PATCH	REPLACE	
	SQ. FT.	CU. FT.	LIN. FT.
3, 1, S.E.		309	
2			
3			
4	3		
5			
6	3		
7			
8 THRU 11			
12			
13			
14			
15	4		
16			
17			
18	28		
ARCH RIBS			
N.E.	177		
N.I.	127		
S.I.	130		
S.E.	425		
	(SUBTOTAL SPAN 3)		
	2700	5099	719
	(SPAN 3 TOTAL)		
	2940	8620	719
	(PAGE TOTAL)		
	2700	5099	719

NOTES:
N – DENOTES CORBEL REPLACEMENT, NORTH SIDE
S – DENOTES CORBEL REPLACEMENT, SOUTH SIDE
* – DENOTES NEW MEMBER

COUNTY BRIDGE NO. 84

HOWARD NEEDLES TAMMEN & BERGENDOFF
ARCHITECTS ENGINEERS PLANNERS
HNTB

ESTIMATED REPAIR QUANTITIES
BR. NO. CUY – 6 – 1499
REHABILITATION OF
VETERANS MEMORIAL BRIDGE
(U.S. 6, 20, 42 & S.R. 3 OVER CUYAHOGA RIVER)
CLEVELAND CUYAHOGA COUNTY OHIO

DRAWN R.S.Y.	TRACED R.S.Y.	CHECKED W.J.V.	REVIEWED C.A.B.	REVISED
DATE 9/30/93	DATE 9/30/93	DATE 10/1/93	DATE 3/31/94	SHEET 30/270

\11646\CONCRETE\VMTAB7.DWG

MEMBER LOCATION	REPAIRING CONCRETE STRUCTURES PATCH SQ. FT.	REPAIRING CONCRETE STRUCTURES REPLACE CU. FT.	REPAIR OF CRACKS LIN. FT.
PIER 3			
FLOORBEAMS		1813	
UPPER SHAFTS			
N.E.	20 / 31#	74	
N.I.		REMOVED	
S.I.		REMOVED	
S.E.	10 / 31#	74	
LOWER WALLS			
NORTH	65		
SOUTH	20		
EAST		6034	
WEST		4920	
INTERIOR	118		
ARCH BASE	3275		
NEW COLUMNS*		198	
NEW JACK ARCHES*		156	
(PIER 3 TOTAL)	3570	13269	0
PIER 4			
FLOORBEAMS		1780	
UPPER SHAFTS			
N.E.	50 / 31#	74	
N.I.		REMOVED	
S.I.		REMOVED	
S.E.	15 / 31#	74	
LOWER WALLS			
NORTH	605		
SOUTH			
EAST		4600	
WEST		8813	
INTERIOR			
ARCH BASE	918		
NEW COLUMNS*		198	
NEW JACK ARCHES*		156	
(PIER 4 TOTAL)	1650	15695	0
SPAN 5			
UPPER DECK FLOORBEAMS			
5, 1		533	
2	2	205	
3	2	204	
4	18	58	
5	23	56	
6	33	54	
7		51	
8	1	47	
9	4	45	
10	5	40	
11	12	35	
12	10	30	
13		172	
14	2	167	
15		359	
UPPER DECK JACK ARCHES			
5, 1 – 2,N.E.	4		
2 – 3	2		
3 – 4	1		
4 – 5	1		
5 – 6	1		
6 – 7	2		
7 – 8	4		
8 – 9	4		
9 – 10	1		
10 – 11	2		
11 – 12	4		
12 – 13		31	
13 – 14		31	
14 – 15		27	
5, 1 – 2 N.I.*		25	
2 – 3,		29	
3 – 4		29	
4 – 5		29	
5 – 6		29	

MEMBER LOCATION	REPAIRING CONCRETE STRUCTURES PATCH SQ. FT.	REPAIRING CONCRETE STRUCTURES REPLACE CU. FT.	REPAIR OF CRACKS LIN. FT.
6 – 7	4		
7 – 8		29	
8 – 9		29	
9 – 10	2		
10 – 11	2		
11 – 12		29	
12 – 13	5		
13 – 14	3		
14 – 15		25	
5, 1 – 2 S.I.*		25	
2 – 3,		29	
3 – 4		29	
4 – 5	8		
5 – 6		29	
6 – 7	2		
7 – 8	3		
8 – 9	3		
9 – 10			
10 – 11	2		
11 – 12		29	
12 – 13		29	
13 – 14		29	
14 – 15		25	
5, 1 – 2,S.E.		27	
2 – 3		31	
3 – 4	6		
4 – 5	1		
5 – 6	1		
6 – 7	2		
7 – 8	1		
8 – 9	1		
9 – 10	1		
10 – 11	2		
11 – 12		31	
12 – 13		31	
13 – 14		31	
14 – 15		27	
UPPER DECK COLUMNS			
5, 1, N.E.		31	
2			
3			
4			
5			
6	4		
7			
8			
9			
10	5		
11	4		
12	2		
13		31	5.8
14	3		
15		31	
5, 1, N.I.		42	
2	16		
3	3		
4	9		
5	7		
6	1		
7	5		
8			
9		34	5.8
10	4		
11	3		
12	10		
13	13		
14	2		
15		42	
5, 1, S.I.		42	
2	8		
3	10		
4	6		
5	9		
6	5		
7	19		
8	9		

MEMBER LOCATION	REPAIRING CONCRETE STRUCTURES PATCH SQ. FT.	REPAIRING CONCRETE STRUCTURES REPLACE CU. FT.	REPAIR OF CRACKS LIN. FT.
9	7		
10	3		
11	12		
12	8		
13		33	2.9
14		33	2.9
15		42	
5, 1, S.E.		31	
2	2		
3	4		
4	3		
5	2		
6	4		
7	4		
8	2		
9	2		
10	2		
11			
12		31	5.8
13		31	
14	8		
15		31	
LOWER DECK EXTERIOR RAILING			
5, 1 – 2,N.E.		32	
2 – 3	7		16.6
3 – 4	2		16.6
4 – 5			35.6
5 – 6			41.6
6 – 7	10		31.6
7 – 8	2		34.6
8 – 9	9		38.6
9 – 10	4		34.6
10 – 11	16		38.6
11 – 12	16		28.6
12 – 13	9		18.6
13 – 14	1		16.6
14 – 15	12		16.6
5, 1 – 2,S.E.	3		16.6
2 – 3	2		18.6
3 – 4	4		23.6
4 – 5			16.6
5 – 6			16.6
6 – 7			16.6
7 – 8	3		16.6
8 – 9	10		16.6
9 – 10	10		23.6
10 – 11	12		23.6
11 – 12	15		23.6
12 – 13		32	
13 – 14	16		16.6
14 – 15	16		16.6
LOWER DECK INTERIOR RAILING			
5, 1 – 2 N.I.*		20	
2 – 3,		20	
3 – 4	5		
4 – 5		20	
5 – 6		20	
6 – 7			
7 – 8	1		
8 – 9	9		
9 – 10	2		
10 – 11			
11 – 12	6		
12 – 13	5		
13 – 14		20	
14 – 15		20	
5, 1 – 2 S.I.*		20	
2 – 3,		20	
3 – 4	7		
4 – 5	4		
5 – 6	2		
6 – 7			
7 – 8	2		
8 – 9	2		
9 – 10			
10 – 11	7		

MEMBER LOCATION	REPAIRING CONCRETE STRUCTURES PATCH SQ. FT.	REPAIRING CONCRETE STRUCTURES REPLACE CU. FT.	REPAIR OF CRACKS LIN. FT.
11 – 12	6		
12 – 13		20	
13 – 14		20	
14 – 15		20	
LOWER DECK FLOORBEAMS			
5, 1		767	
2	22	261	10
3	72		33
4	26		30
5	9		28
6	23		10
7	18		
8	11		
9	7		10
10	17		6
11	24		5
12	6		4
13			4
14	3		3
15	48		
LOWER DECK FLOORBEAM CORBELS			
5, 1		N,S	
2		N	
3	2		
4			
5		N	
6		N	
7			
8			
9		N	
10		N	
11	3	S	
12			
13	1		
14			
15		N	
LOWER DECK JACK ARCHES			
5, 1 – 2,N.E.		32	
2 – 3		32	
3 – 4		32	
4 – 5			6
5 – 6			6
6 – 7	3		5
7 – 8			
8 – 9			
9 – 10		32	
10 – 11		32	
11 – 12	4		3
12 – 13			
13 – 14			
14 – 15			
5, 1 – 2,N.I.		29	
2 – 3			
3 – 4		29	
4 – 5		29	
5 – 6			
6 – 7			
7 – 8	3		
8 – 9	3		
9 – 10			
10 – 11			
11 – 12		29	
12 – 13	6		
13 – 14		29	
14 – 15	5		3
5, 1 – 2,S.I.		29	
2 – 3		29	
3 – 4		29	
4 – 5	2		8
5 – 6			7
6 – 7			

FHWA REGION	STATE	PROJECT	
5	OHIO		

163
412

CUYAHOGA COUNTY
CUY – 6 – 14.99

MEMBER LOCATION	REPAIRING CONCRETE STRUCTURES PATCH SQ. FT.	REPAIRING CONCRETE STRUCTURES REPLACE CU. FT.	REPAIR OF CRACKS LIN. FT.
7 – 8			
8 – 9			
9 – 10			
10 – 11		29	
11 – 12			
12 – 13			
13 – 14		29	
14 – 15	6		5
5, 1 – 2,S.E.		32	
2 – 3		32	
3 – 4		32	
4 – 5		32	
5 – 6		32	
6 – 7		32	
7 – 8			
8 – 9			
9 – 10			
10 – 11			
11 – 12	3		3
12 – 13			
13 – 14			5
14 – 15			
	(SUBTOTAL SPAN 5)		
	971	5239	831.8
	(PAGE TOTAL)		
	6191	34203	831.8

NOTES:

– DENOTES AREA OF EXISTING CONCRETE ENCASED STEEL MEMBER TO BE REPAIRED
N – DENOTES CORBEL REPLACEMENT, NORTH SIDE
S – DENOTES CORBEL REPLACEMENT, SOUTH SIDE
* – DENOTES NEW MEMBER

COUNTY BRIDGE NO. 84

HOWARD NEEDLES TAMMEN & BERGENDOFF
ARCHITECTS ENGINEERS PLANNERS
HNTB

ESTIMATED REPAIR QUANTITIES
BR. NO. CUY – 6 – 1499
REHABILITATION OF
VETERANS MEMORIAL BRIDGE
(U.S. 6, 20, 42 & S.R. 3 OVER CUYAHOGA RIVER)
CLEVELAND CUYAHOGA COUNTY OHIO

DRAWN R.S.Y.	TRACED R.S.Y.	CHECKED W.J.V.	REVIEWED C.A.B.	REVISED
DATE 10/1/93	DATE 10/1/93	DATE 10/1/93	DATE 3/31/94	SHEET 31/270

\11646\CONCRETE\VMTABB.DWG

MEMBER LOCATION	REPAIRING CONCRETE STRUCTURES		REPAIR OF CRACKS
	PATCH	REPLACE	
	SQ. FT.	CU. FT.	LIN. FT.
SPAN 5(CONTINUED)			
LOWER DECK COLUMNS			
5, 1, N.E.	164		
2			
3			
4			
5			
6			
10			
11	8		
12	10		
13			
14			
15	17		4
5, 1, N.I.	56		10
2			
3			
4			
5			
6			
10			
11	3		
12			
13			
14			
15	103		
5, 1, S.I.	38		8
2			
3			
4			
5			
6			
10			
11			
12	8		
13			
14			2
15	29		
5, 1, S.E.	89		
2			
3	4		
4			
5			
6			
10			
11			
12	2		2
13	3		3
14			
15	12		
ARCH RIBS			
N.E.	20		40
N.I.	166		5
S.I.	51		15
S.E.	81		50
	(SUBTOTAL SPAN 5)		
	864	0	139
	(SPAN 5 TOTAL)		
	1835	5239	970.8
PIER 5			
UPPER SHAFTS			
FLOORBEAMS		REMOVED	
N.E.		778	
N.I.		REMOVED	
S.I.		REMOVED	
S.E.		778	
LOWER WALL	554	1730	
ARCH BASE	628		

MEMBER LOCATION	REPAIRING CONCRETE STRUCTURES		REPAIR OF CRACKS
	PATCH	REPLACE	
	SQ. FT.	CU. FT.	LIN. FT.
	(PIER 5 TOTAL)		
	1182	3286	0
SPAN 6			
UPPER DECK FLOORBEAMS (INCLUDING CANTILEVERS)			
6, 1		359	
2		152	
3	6		
4	4		
5	15		
6	3		
7	5		
8	7		
9	15		
10	33		
11	6		
12		145	
13		145	
14	12		
15		359	
UPPER DECK JACK ARCHES			
6, 1 – 2,N.E.		27	
2 – 3	2		
3 – 4	3		
4 – 5	1		
5 – 6	1		
6 – 7	3		
7 – 8	1		
8 – 9	1		
9 – 10	4		
10 – 11	4		
11 – 12	4		
12 – 13	2		
13 – 14	2		
14 – 15		27	
6, 1 – 2,N.I.		25	
2 – 3	9		
3 – 4	7		3
4 – 5		29	
5 – 6		29	
6 – 7		29	
7 – 8	6		
8 – 9		29	
9 – 10	3		
10 – 11	5		
11 – 12	9		
12 – 13		29	
13 – 14		29	
14 – 15		25	
6, 1 – 2,S.I.		25	
2 – 3		29	
3 – 4		29	
4 – 5	1		
5 – 6		29	
6 – 7	6		
7 – 8	1		
8 – 9		29	
9 – 10		29	
10 – 11	2		
11 – 12		29	
12 – 13		29	
13 – 14	5		3
14 – 15		25	
6, 1 – 2,S.E.		27	
2 – 3	8		
3 – 4	2		
4 – 5	1		
5 – 6		31	
6 – 7		31	
7 – 8		31	
8 – 9	3		
9 – 10	3		
10 – 11	2		

MEMBER LOCATION	REPAIRING CONCRETE STRUCTURES		REPAIR OF CRACKS
	PATCH	REPLACE	
	SQ. FT.	CU. FT.	LIN. FT.
11 – 12	2		
12 – 13		31	
13 – 14			
14 – 15		27	
UPPER DECK COLUMNS			
6, 1, N.E.		31	
2	4		
3	1		
4	2		
5	1		
6			
7	4		
8			
9	3		
10	1		
11	1		
12	3		
13	4		
14	3		
15		31	
6, 1, N.I.		42	
2		33	5.8
3	11		
4	8		
5	13		
6	5		
7	5		
8	12		
9		33	5.8
10	2		
11	4		
12		33	5.8
13		33	5.8
14		33	5.8
15		42	
6, 1, S.I.		42	
2		33	2.9
3	4		
4	8		
5	6		
6	6		
7			
8	2		
9	10		
10	2		
11			
12	9		
13	2		
14	4		
15		42	
6, 1, S.E.		31	
2			
3			
4	1		
5			
6			
7	6		
8	1		
9	3		
10	1		
11	1		
12	1		
13	4		
14	5		
15		31	
LOWER DECK EXTERIOR RAILING			
6, 1 – 2,N.E.	9		28.6
2 – 3	14		16.6
3 – 4	15		19.6
4 – 5	12		16.6
5 – 6	6		25.6
6 – 7	3		16.6
7 – 8	4		16.6
8 – 9	2		16.6
9 – 10	2		26.6
10 – 11	1		22.6

MEMBER LOCATION	REPAIRING CONCRETE STRUCTURES		REPAIR OF CRACKS
	PATCH	REPLACE	
	SQ. FT.	CU. FT.	LIN. FT.
11 – 12	7		18.6
12 – 13	3		27.6
13 – 14	4		16.6
14 – 15	2		16.6
6, 1 – 2,S.E.	6		16.6
2 – 3	11		16.6
3 – 4	10		16.6
4 – 5	8		16.6
5 – 6	6		26.6
6 – 7	12		16.6
7 – 8	14		16.6
8 – 9	8		16.6
9 – 10	11		16.6
10 – 11	8		16.6
11 – 12	15		16.6
12 – 13	6		16.6
13 – 14	4		22.6
14 – 15	3		19.6
LOWER DECK INTERIOR RAILING			
6, 1 – 2,N.I.		20	
2 – 3	6		
3 – 4	3		
4 – 5			
5 – 6		20	
6 – 7		20	
7 – 8	4		
8 – 9		20	
9 – 10	5		
10 – 11			
11 – 12	3		
12 – 13		20	
13 – 14		20	
14 – 15		20	
6, 1 – 2,S.I.		20	
2 – 3,		20	
3 – 4			
4 – 5			
5 – 6	4		
6 – 7	4		
7 – 8			
8 – 9	5		
9 – 10			
10 – 11			
11 – 12	5		
12 – 13		20	
13 – 14			
14 – 15		20	
LOWER DECK FLOORBEAMS			
6, 1	30		
2	6		
3	13		
4	44		
5	8		
6	8		
7	10		
8	18		
9	38		
10	19		
11			
12	4		
13			
14	4		
15	12		
LOWER DECK FLOORBEAM CORBELS			
6, 1		N	4
2			
3			
4			
5	1		
6			
7			
8	1		
9			
10		N	

FHWA REGION	STATE	PROJECT	
5	OHIO		

164/412

CUYAHOGA COUNTY
CUY – 6 – 14.99

MEMBER LOCATION	REPAIRING CONCRETE STRUCTURES		REPAIR OF CRACKS
	PATCH	REPLACE	
	SQ. FT.	CU. FT.	LIN. FT.
11		N	
12		N	
13	2		
14			
15		S	
LOWER DECK JACK ARCHES			
6, 1 – 2,N.E.			
2 – 3			
3 – 4	3		4
4 – 5		32	
5 – 6			
6 – 7			6
7 – 8			
	(SUBTOTAL SPAN 6)		
	838	2611	588.7
	(PAGE TOTAL)		
	2884	5897	727.7

NOTES:
N – DENOTES CORBEL REPLACEMENT, NORTH SIDE
S – DENOTES CORBEL REPLACEMENT, SOUTH SIDE

COUNTY BRIDGE NO. 84

HOWARD NEEDLES TAMMEN & BERGENDOFF
ARCHITECTS ENGINEERS PLANNERS
HNTB

ESTIMATED REPAIR QUANTITIES
BR. NO. CUY – 6 – 1499
REHABILITATION OF
VETERANS MEMORIAL BRIDGE
(U.S. 6, 20, 42 & S.R. 3 OVER CUYAHOGA RIVER)
CLEVELAND CUYAHOGA COUNTY OHIO

DRAWN	TRACED	CHECKED	REVIEWED	REVISED
R.S.Y	R.S.Y	W.J.V.	C.A.B.	
DATE 10/1/93	DATE 10/1/93	DATE 10/1/93	DATE 3/31/94	SHEET 32/270

\11646\CONCRETE\WMTAB9.DWG

MEMBER LOCATION	REPAIRING CONCRETE STRUCTURES PATCH SQ. FT.	REPAIRING CONCRETE STRUCTURES REPLACE CU. FT.	REPAIR OF CRACKS LIN. FT.
SPAN 6(CONTINUED)			
LOWER DECK JACK ARCHES(CONTINUED)			
8 – 9			
9 – 10			
10 – 11			
11 – 12		32	
12 – 13		32	
13 – 14			6
14 – 15			
6, 1 – 2,N.I.			
2 – 3			
3 – 4			
4 – 5		29	
5 – 6			
6 – 7			6
7 – 8			
8 – 9	3		
9 – 10	3		
10 – 11		29	
11 – 12			
12 – 13		29	
13 – 14			
14 – 15			
6, 1 – 2,S.I.			
2 – 3			
3 – 4			
4 – 5		29	
5 – 6			
6 – 7	2		6
7 – 8			
8 – 9	5		
9 – 10			
10 – 11		29	
11 – 12	6		
12 – 13			
13 – 14			
14 – 15			
6, 1 – 2,S.E.			
2 – 3		32	
3 – 4			
4 – 5			
5 – 6			6
6 – 7			
7 – 8	2		
8 – 9		32	
9 – 10			
10 – 11			
11 – 12	6		
12 – 13	5		
13 – 14		32	
14 – 15		32	
LOWER DECK COLUMNS			
6, 1, N.E.	17		
2			
3	4		
4	6		3
5			
6 / 8	/ 2		
10	5		
11			
12			
13			
14			
15	4		
6, 1, N.I.	15		
2	4		
3			
4	2		
5	11		
6			
10			
11			
12	3		
13			
14	3		
15	2		

MEMBER LOCATION	REPAIRING CONCRETE STRUCTURES PATCH SQ. FT.	REPAIRING CONCRETE STRUCTURES REPLACE CU. FT.	REPAIR OF CRACKS LIN. FT.
6, 1, S.I.	9		
2			
3	3		
4	5		
5			
6			
10			
11			
12			
13	5		
14			
15			
6, 1, S.E.	34		
2	5		
3			
4	3		
5			
6			
10			
11			
12			
13			
14	18		
15			
ARCH RIBS			
N.E.	156		10
N.I.	186		
S.I.	75		
S.E.	115		
	(SUBTOTAL SPAN 6)		
	724	337	37
	(SPAN 6 TOTAL)		
	1562	2948	625.7
PIER 6			
UPPER SHAFTS			
FLOORBEAMS		REMOVED	
N.E.	4	148	
N.I.		REMOVED	
S.I.		REMOVED	
S.E.	24	148	
LOWER WALL	283	1619	
ARCH BASE	738		
	(PIER 6 TOTAL)		
	1049	1915	0
SPAN 7			
UPPER DECK FLOORBEAMS			
7, 1		359	
2	9		
3	18		
4		145	
5		145	
6	7		
7	34		
8	14		
9	1		
10	5		
11	21		
12	6		
13	7		
14		145	
15		359	
UPPER DECK JACK ARCHES			
7, 1 – 2 N.E.		27	
2 – 3	4		
3 – 4			
4 – 5	3		
5 – 6			

MEMBER LOCATION	REPAIRING CONCRETE STRUCTURES PATCH SQ. FT.	REPAIRING CONCRETE STRUCTURES REPLACE CU. FT.	REPAIR OF CRACKS LIN. FT.
6 – 7		31	
7 – 8	2		
8 – 9		31	
9 – 10	3		
10 – 11	1		
11 – 12	6		
12 – 13			
13 – 14	6		
14 – 15		27	
7, 1 – 2,N.I.		25	
2 – 3	2		
3 – 4	8		
4 – 5		29	
5 – 6	1		
6 – 7		29	
7 – 8		29	
8 – 9		29	
9 – 10		29	
10 – 11		29	
11 – 12		29	
12 – 13		29	
13 – 14		29	
14 – 15		25	
7, 1 – 2,S.I.		25	
2 – 3		29	
3 – 4		29	
4 – 5		29	
5 – 6		29	
6 – 7		29	
7 – 8		29	
8 – 9		29	
9 – 10		29	
10 – 11	9		
11 – 12		29	
12 – 13		29	
13 – 14		29	
14 – 15		25	
7, 1 – 2,S.E.		27	
2 – 3	7		
3 – 4	2		
4 – 5		31	
5 – 6	1		
6 – 7	1		
7 – 8	3		
8 – 9	2		
9 – 10	4		
10 – 11	4		
11 – 12		31	
12 – 13		31	
13 – 14	2		
14 – 15		27	
UPPER DECK COLUMNS			
7, 1 N.E.		31	
2	2		
3			
4	5		
5	3		
6			
7	4		
8	5		
9	2		
10	1		
11			
12			
13			
14			
15		31	
7, 1, N.I.		42	
2		33	5.8
3	12		
4	8		
5	13		
6	17		
7	6		
8	5		
9	2		

MEMBER LOCATION	REPAIRING CONCRETE STRUCTURES PATCH SQ. FT.	REPAIRING CONCRETE STRUCTURES REPLACE CU. FT.	REPAIR OF CRACKS LIN. FT.
10	4		
11		33	5.8
12		33	5.8
13	15		
14		33	5.8
15		42	
7, 1, S.I.		42	
2		33	5.8
3	16		
4	4		
5	18		
6	2		
7	7		
8		33	5.8
9		33	5.8
10	4		
11	6		
12	19		
13		19	5.8
14		33	5.8
15		42	
7, 1, S.E.		31	
2	1		
3	1		
4	6		
5	3		
6	1		
7	1		
8	4		
9		31	5.8
10	1		
11	1		
12	3		
13		31	5.8
14	3		
15		31	
LOWER DECK EXTERIOR RAILING			
7, 1 – 2,N.E.			16.6
2 – 3	1		24.6
3 – 4			21.6
4 – 5			29.6
5 – 6			16.6
6 – 7			16.6
7 – 8	1		16.6
8 – 9	2		16.6
9 – 10	2		21.6
10 – 11	2		16.6
11 – 12	1		16.6
12 – 13	2		16.6
13 – 14	2		16.6
14 – 15	5		16.6
7, 1 – 2,S.E.	3		16.6
2 – 3	5		16.6
3 – 4	5		20.6
4 – 5	4		22.6
5 – 6	2		16.6
6 – 7			19.6
7 – 8	5		16.6
8 – 9	2		16.6
9 – 10	1		16.6
10 – 11			21.6
11 – 12	8		25.6
12 – 13	2		20.6
13 – 14	4		21.6
14 – 15	1		25.6
LOWER DECK INTERIOR RAILING			
7, 1 – 2,N.I.		20	
2 – 3		20	
3 – 4		20	
4 – 5		20	
5 – 6			
6 – 7		20	
7 – 8	7		
8 – 9	8		
9 – 10			
10 – 11	4		

FHWA REGION	STATE	PROJECT	
5	OHIO		

165/412

CUYAHOGA COUNTY
CUY – 6 – 14.99

MEMBER LOCATION	REPAIRING CONCRETE STRUCTURES PATCH SQ. FT.	REPAIRING CONCRETE STRUCTURES REPLACE CU. FT.	REPAIR OF CRACKS LIN. FT.
11 – 12		20	
12 – 13		20	
13 – 14		20	
14 – 15		20	
7, 1 – 2,S.I.		20	
2 – 3		20	
3 – 4			
4 – 5		20	
5 – 6			
6 – 7	6		
7 – 8	8		
8 – 9		20	
9 – 10	13		
10 – 11		20	
11 – 12		20	
12 – 13		20	
13 – 14		20	
14 – 15		20	
	(SUBTOTAL SPAN 7)		
	504	3093	604.6
	(PAGE TOTAL)		
	2277	5345	641.6

COUNTY BRIDGE NO. 84

HOWARD NEEDLES TAMMEN & BERGENDOFF
ARCHITECTS ENGINEERS PLANNERS
HNTB

ESTIMATED REPAIR QUANTITIES
BR. NO. CUY – 6 – 1499
REHABILITATION OF
VETERANS MEMORIAL BRIDGE
(U.S. 6, 20, 42 & S.R. 3 OVER CUYAHOGA RIVER)

CLEVELAND CUYAHOGA COUNTY OHIO

DRAWN R.S.Y	TRACED R.S.Y	CHECKED W.J.V.	REVIEWED C.A.B.	REVISED
DATE 10/1/93	DATE 10/1/93	DATE 10/15/93	DATE 3/31/94	SHEET 33/270

\11646\CONCRETE\VMTAB10.DWG

MEMBER LOCATION	REPAIRING CONCRETE STRUCTURES		REPAIR OF CRACKS
	PATCH	REPLACE	
	SQ. FT.	CU. FT.	LIN. FT.
SPAN 7(CONTINUED)			
LOWER DECK FLOORBEAMS			
7, 1	16		
2	40		
3	12		
4	36		
5	10		
6	9		
7	23		
8	33		
9	29		
10	21		
11	27		
12	76		
13	64		
14	27		
15	94		
LOWER DECK FLOORBEAM CORBELS			
7, 1			
2			
3			
4		N	
5		N	
6			
7			
8		N	
9		N	
10			
11			
12			
13			
14			
15	4		
LOWER DECK JACK ARCHES			
7, 1 – 2,N.E.			
2 – 3			6
3 – 4		32	
4 – 5		32	
5 – 6			
6 – 7			
7 – 8			
8 – 9			
9 – 10			
10 – 11			
11 – 12	4		
12 – 13			
13 – 14	5		
14 – 15			
7, 1 – 2,N.I.			6
2 – 3			
3 – 4			
4 – 5		29	
5 – 6			6
6 – 7			
7 – 8			
8 – 9			
9 – 10			
10 – 11			
11 – 12		29	
12 – 13	3		
13 – 14			
14 – 15			6
7, 1 – 2,S.I.			
2 – 3	3		
3 – 4			
4 – 5	8		
5 – 6			
6 – 7	4		6

MEMBER LOCATION	REPAIRING CONCRETE STRUCTURES		REPAIR OF CRACKS
	PATCH	REPLACE	
	SQ. FT.	CU. FT.	LIN. FT.
7 – 8			
8 – 9	2		
9 – 10	3		
10 – 11			
11 – 12		29	
12 – 13			
13 – 14			
14 – 15			
7, 1 – 2,S.E.		32	
2 – 3	6		
3 – 4			
4 – 5	3		
5 – 6		32	
6 – 7		32	
7 – 8		32	
8 – 9			
9 – 10	4		
10 – 11		32	
11 – 12			
12 – 13			5
13 – 14		32	
14 – 15			
LOWER DECK COLUMNS			
7, 1, N.E.			
2	17		
3			
4	8		
5			
6			
10			
11			
12			
13	5		
14	34		
15	29		
7, 1, N.I.	33		
2	4		
3	5		
4	12		
5			
6			
10			
11	4		
12	2		
13	3		
14	33		
15	90		2
7, 1, S.I.	9		
2			
3	12		
4			
5			
6			
10			
11	3		
12	5		
13	16		
14	18		
15	50		12
7, 1, S.E.	27		
2			
3			
4			
5	3		
6			
10			
11	10		
12	5		4
13	3		7
14	4		5
15	56		
ARCH RIBS			
N.E.	179		
N.I.	86		
S.I.	135		
S.E.	148		

MEMBER LOCATION	REPAIRING CONCRETE STRUCTURES		REPAIR OF CRACKS
	PATCH	REPLACE	
	SQ. FT.	CU. FT.	LIN. FT.
	(SUBTOTAL SPAN 7)		
	1614	343	65
	(SPAN 7 TOTAL)		
	2118	3436	669.6
PIER 7			
UPPER SHAFTS			
FLOORBEAMS		REMOVED	
N.E.	65	149	
N.I.		REMOVED	
S.I.		REMOVED	
S.E.	44	149	
LOWER WALL	499	854	
ARCH BASE	757		
	(PIER 7 TOTAL)		
	1365	1152	0
SPAN 8			
UPPER DECK FLOORBEAMS			
8, 1		359	
2	3		
3		145	
4	20		
5	3		
6	5		
7	17		
8	18		
9	25		
10	11		
11	27		
12	6		
13	13	145	
14	8		
15		359	
UPPER DECK JACK ARCHES			
8, 1 – 2,N.E.		27	
2 – 3			
3 – 4			
4 – 5			
5 – 6			
6 – 7			
7 – 8			
8 – 9	2		
9 – 10			
10 – 11			
11 – 12	4		
12 – 13	1		
13 – 14	2		
14 – 15		27	
8, 1 – 2,N.I.		25	
2 – 3	2		
3 – 4	1		
4 – 5	1		
5 – 6			
6 – 7		29	
7 – 8	8		
8 – 9		29	
9 – 10	3		
10 – 11	3		
11 – 12	3		
12 – 13	3		
13 – 14	6		
14 – 15		25	
8, 1 – 2,S.I.		25	
2 – 3			
3 – 4	2		
4 – 5	2		
5 – 6	3		
6 – 7	5		

MEMBER LOCATION	REPAIRING CONCRETE STRUCTURES		REPAIR OF CRACKS
	PATCH	REPLACE	
	SQ. FT.	CU. FT.	LIN. FT.
7 – 8	3		
8 – 9	4		
9 – 10	5		
10 – 11	5		
11 – 12	5		
12 – 13	3		
13 – 14	6		
14 – 15		25	
8, 1 – 2,S.E.		27	
2 – 3		31	
3 – 4	4		
4 – 5			
5 – 6			
6 – 7			
7 – 8	2		
8 – 9			
9 – 10	4		3
10 – 11			
11 – 12	2		
12 – 13	5		
13 – 14			5
14 – 15	2	27	
UPPER DECK COLUMNS			
8, 1 N.E.		31	
2	1		
3	6		
4	12		
5	5		
6	18		
7	2		
8	6		
9	10		
10	1		
11	1		
12	4		
13	1		
14	5		
15		31	
8, 1, N.I.		42	
2	9		
3	12		
4	4		
5	6		
6	11		
7	5		
8	8		
9	5		
10	4		
11	1		
12	3		
13	2		
14	8		
15		42	
8, 1, S.I.		42	
2	14		
3	5		
4	2		
5	4		
6	4		
7	8		
8	7		
9	2		
10	1		
11	3		
12	9		
13	8		
14		33	5.8
15		42	
8, 1, S.E.		31	
2	7		
3	7		
4	7		
	(SUBTOTAL SPAN 8)		
	495	1599	13.8
	(PAGE TOTAL)		
	3474	3094	78.8

FHWA REGION	STATE	PROJECT	
5	OHIO		

166/412

CUYAHOGA COUNTY
CUY – 6 – 14.99

MEMBER LOCATION	REPAIRING CONCRETE STRUCTURES		REPAIR OF CRACKS
	PATCH	REPLACE	
	SQ. FT.	CU. FT.	LIN. FT.

NOTES:
N – DENOTES CORBEL REPLACEMENT, NORTH SIDE
S – DENOTES CORBEL REPLACEMENT, SOUTH SIDE

COUNTY BRIDGE NO. 84

HOWARD NEEDLES TAMMEN & BERGENDOFF
ARCHITECTS ENGINEERS PLANNERS
HNTB

ESTIMATED REPAIR QUANTITIES
BR. NO. CUY – 6 – 1499
REHABILITATION OF
VETERANS MEMORIAL BRIDGE
(U.S. 6, 20, 42 & S.R. 3 OVER CUYAHOGA RIVER)

CLEVELAND CUYAHOGA COUNTY OHIO

DRAWN R.S.Y.	TRACED R.S.Y.	CHECKED W.J.V.	REVIEWED C.A.B.	REVISED
DATE 9/29/93	DATE 9/29/93	DATE 9/30/93	DATE 3/31/94	SHEET 34/270

\11646\CONCRETE\VMTAB11.DWG

MEMBER LOCATION	REPAIRING CONCRETE STRUCTURES		REPAIR OF CRACKS
	PATCH	REPLACE	
	SQ. FT.	CU. FT.	LIN. FT.
SPAN 8(CONTINUED)			
UPPER DECK COLUMNS(CONTINUED)			
5	9		
6	1		
7	5		
8	9		
9	4		
10	3		
11	16		
12	3		
13	10		
14		31	5.8
15		31	
LOWER DECK EXTERIOR RAILING			
8, 1 – 2,N.E.	12		18.6
2 – 3	2		36.6
3 – 4	1		16.6
4 – 5	2		17.6
5 – 6	3		16.6
6 – 7			23.6
7 – 8			16.6
8 – 9	2		25.6
9 – 10	2		23.6
10 – 11	1		25.6
11 – 12	2		18.6
12 – 13	2		16.6
13 – 14	1		18.6
14 – 15	4		18.6
8, 1 – 2,S.E.		32	
2 – 3	3		20.6
3 – 4	2		19.6
4 – 5	3		16.6
5 – 6	1		16.6
6 – 7	6		26.6
7 – 8	4		16.6
8 – 9	8		26.6
9 – 10	5		26.6
10 – 11	10		26.6
11 – 12	11		32.6
12 – 13	8		26.6
13 – 14	2		16.6
14 – 15		32	
LOWER DECK INTERIOR RAILING			
8, 1 – 2,N.I.	4		
2 – 3			
3 – 4	2		
4 – 5			
5 – 6			
6 – 7			
7 – 8	2		
8 – 9			
9 – 10			
10 – 11			
11 – 12	5		
12 – 13			
13 – 14	5		
14 – 15	7		
8, 1 – 2,S.I.		20	
2 – 3	3		
3 – 4	3		
4 – 5			
5 – 6	2		
6 – 7	2		
7 – 8	2		
8 – 9			
9 – 10			
10 – 11	2		
11 – 12			2
12 – 13			2
13 – 14	5		
14 – 15		20	
LOWER DECK FLOORBEAMS			
8, 1	41		
2	16		
3	18		

MEMBER LOCATION	REPAIRING CONCRETE STRUCTURES		REPAIR OF CRACKS
	PATCH	REPLACE	
	SQ. FT.	CU. FT.	LIN. FT.
4	45		
5	27		
6	32		
7	27		
8	33		
9	58		
10	54		
11	51		
12	81		
13	40		
14	46		
15	39		
LOWER DECK FLOORBEAM CORBELS			
8, 1		N,S	
2			
3			
4			
5			
6		S	
7			
8			
9			
10			
11			
12	2		
13	3		
14			
15	2	N	
LOWER DECK JACK ARCHES			
8, 1 – 2,N.E.		32	
2 – 3		32	
3 – 4	3		6
4 – 5			
5 – 6			
6 – 7			
7 – 8	3		
8 – 9			
9 – 10			
10 – 11	3		4
11 – 12		32	
12 – 13			
13 – 14		32	
14 – 15		32	
8, 1 – 2,N.I.			6
2 – 3			
3 – 4			6
4 – 5			
5 – 6		29	
6 – 7			
7 – 8			
8 – 9			
9 – 10			
10 – 11			
11 – 12		29	
12 – 13			
13 – 14			6
14 – 15			6
8, 1 – 2,S.I.	2		6
2 – 3			6
3 – 4			
4 – 5			5
5 – 6		29	
6 – 7			6
7 – 8			
8 – 9			
9 – 10			
10 – 11			6
11 – 12		29	
12 – 13			6
13 – 14	2		8
14 – 15	2		6
8, 1 – 2,S.E.			6
2 – 3			5
3 – 4			6

MEMBER LOCATION	REPAIRING CONCRETE STRUCTURES		REPAIR OF CRACKS
	PATCH	REPLACE	
	SQ. FT.	CU. FT.	LIN. FT.
4 – 5		32	
5 – 6	4		5
6 – 7	4		
7 – 8			
8 – 9			
9 – 10	2		6
10 – 11	2		
11 – 12		32	
12 – 13		32	
13 – 14			
14 – 15			
LOWER DECK COLUMNS			
8, 1, N.E.			
2			
3			
4			
5	4		
6	12		5
10			
11	5		
12	2		
13	12		
14	6		
15	35		8
8, 1, N.I.	38		
2			
3			
4			
5	5		
6			
10			
11	2		
12	6		
13	5		
14	12		
15	14		
8, 1, S.I.	10		
2			
3	21		
4	4		
5	4		
6			
10			
11			
12			
13			
14	18		
15	15		
8, 1, S.E.	20		
2			
3	2		
4	2		
5	5		
6	3		
10			
11	11		
12			
13			
14	8		
15	18		
ARCH RIBS			
N.E.	186		4
N.I.	273		
S.I.	334		
S.E.	141		6
	(SUBTOTAL SPAN 8)		
	2076	538	709.4
	(SPAN 8 TOTAL)		
	2571	2137	723.2
PIER 8			
UPPER SHAFTS			
FLOORBEAMS		REMOVED	
N.E.	15	149	
N.I.		REMOVED	
S.I.		REMOVED	

MEMBER LOCATION	REPAIRING CONCRETE STRUCTURES		REPAIR OF CRACKS
	PATCH	REPLACE	
	SQ. FT.	CU. FT.	LIN. FT.
S.E.	4	149	
LOWER WALL	733	1923	
ARCH BASE	812		
	(PIER 8 TOTAL)		
	1564	2221	0
SPAN 9			
UPPER DECK FLOORBEAMS			
9, 1		359	
2	27		
3	17		
4	24		
5	11		
6	34		
7	1		
8	4		
9	6		
10	4		
11	11		
12	6		
13		359	
UPPER DECK JACK ARCHES			
9, 1 – 2,N.E.		26	
2 – 3	1		
3 – 4	5		
4 – 5	8		
5 – 6			
6 – 7	4		
7 – 8	2		
8 – 9	3		
9 – 10	6		
10 – 11	3		
11 – 12	4		
12 – 13		26	
9, 1 – 2,N.I.		23	
2 – 3	9		
3 – 4	7		
4 – 5		27	
5 – 6	1		
6 – 7		27	
7 – 8		27	
8 – 9		27	
9 – 10		27	
10 – 11		27	
11 – 12		27	
12 – 13		23	
9, 1 – 2,S.I.		23	
2 – 3		27	
3 – 4		27	
4 – 5		27	
5 – 6	2		
6 – 7	4		
7 – 8	7		
8 – 9		27	
9 – 10			
10 – 11		27	
11 – 12		27	
12 – 13		23	
9, 1 – 2,S.E.		26	
2 – 3	2		
3 – 4	2		
4 – 5	1		
5 – 6	1		
6 – 7	4		

FHWA REGION	STATE	PROJECT	
5	OHIO		

167
412

CUYAHOGA COUNTY
CUY – 6 – 14.99

MEMBER LOCATION	REPAIRING CONCRETE STRUCTURES		REPAIR OF CRACKS
	PATCH	REPLACE	
	SQ. FT.	CU. FT.	LIN. FT.
7 – 8			
8 – 9	2		
9 – 10		30	
10 – 11	2		
11 – 12	4		
12 – 13		26	
UPPER DECK COLUMNS			
9, 1 N.E.		31	
2	3		
3			
4	7		
5			
6			
7	4		
8	1		
9	1		
10	3		
11	2		
12		19	5.8
13		31	
	(SUBTOTAL SPAN 9)		
	250	1376	5.8
	(PAGE TOTAL)		
	3890	4135	715.2

NOTES:
N – DENOTES CORBEL REPLACEMENT, NORTH SIDE
S – DENOTES CORBEL REPLACEMENT, SOUTH SIDE

COUNTY BRIDGE NO. 84

HOWARD NEEDLES TAMMEN & BERGENDOFF
ARCHITECTS ENGINEERS PLANNERS
HNTB

ESTIMATED REPAIR QUANTITIES
BR. NO. CUY – 6 – 1499
REHABILITATION OF
VETERANS MEMORIAL BRIDGE
(U.S. 6, 20, 42 & S.R. 3 OVER CUYAHOGA RIVER)
CLEVELAND CUYAHOGA COUNTY OHIO

DRAWN	TRACED	CHECKED	REVIEWED	REVISED
R.S.Y.	R.S.Y.	W.J.V.	C.A.B.	
DATE 9/28/93	DATE 9/28/93	DATE 9/29/93	DATE 3/31/94	SHEET 35/270

\11646\CONCRETE\WMTAB12.DWG

MEMBER LOCATION	REPAIRING CONCRETE STRUCTURES		REPAIR OF CRACKS
	PATCH	REPLACE	
	SQ. FT.	CU. FT.	LIN. FT.
SPAN 9(CONTINUED)			
UPPER DECK COLUMNS(CONTINUED)			
9, 1 N.I.		42	
2	20		
3	12		
4	10		
5	13		6
6	8		
7	13		4
8	2		
9	8		
10	5		
11	16		
12	15		
13		42	
9, 1 S.I.		42	
2	16		
3	9		
4	5		
5	13		
6	11		
7	17		
8	14		
9	14		
10	18		
11		33	5.8
12	19		
13		42	
9, 1 S.E.		31	
2	7		
3	2		
4	11		
5	16		
6	6		
7	18		
8	8		
9		31	5.8
10		19	5.8
11	17		
12		31	5.8
13		31	
LOWER DECK EXTERIOR RAILING			
9, 1 – 2,N.E.	2		22.8
2 – 3	5		15.8
3 – 4	7		27.8
4 – 5	3		15.8
5 – 6	9		15.8
6 – 7	3		15.8
7 – 8	9		25.8
8 – 9	1		15.8
9 – 10	5		15.8
10 – 11	1		25.8
11 – 12	2		15.8
12 – 13	6		19.8
9, 1 – 2,S.E.	4		22.8
2 – 3	2		21.8
3 – 4	4		27.8
4 – 5	5		15.8
5 – 6		31	
6 – 7	7		27.8
7 – 8	9		22.8
8 – 9		31	
9 – 10		31	
10 – 11			15.8
11 – 12	2		19.8
12 – 13	6		20.8
LOWER DECK INTERIOR RAILING			
9, 1 – 2,N.I.		19	
2 – 3	6		
3 – 4	8		
4 – 5	5		
5 – 6	4		10
6 – 7	2		
7 – 8	2		
8 – 9	5		

MEMBER LOCATION	REPAIRING CONCRETE STRUCTURES		REPAIR OF CRACKS
	PATCH	REPLACE	
	SQ. FT.	CU. FT.	LIN. FT.
9 – 10		19	
10 – 11	2		
11 – 12		19	
12 – 13		19	
9, 1 – 2,S.I.		19	
2 – 3		19	
3 – 4	2		
4 – 5		19	
5 – 6	7		
6 – 7	8		
7 – 8	5		
8 – 9	8		
9 – 10	4		
10 – 11	4		
11 – 12		19	
12 – 13		19	
LOWER DECK FLOORBEAMS			
9, 1	106		
2	50		
3	51		
4	84		
5	24		
6	64		
7	53		
8	27		
9	56		
10	35		
11	22		
12	8		
13	79		
LOWER DECK FLOORBEAM CORBELS			
9, 1	1		
2			
3	2		
4	5		
5	4		
6			
7			
8			
9	3		
10			
11			
12			
13	4		
LOWER DECK JACK ARCHES			
9, 1 – 2,N.E.			
2 – 3		31	
3 – 4		31	
4 – 5	6		
5 – 6			
6 – 7			4
7 – 8			2
8 – 9			4
9 – 10			
10 – 11		31	
11 – 12			
12 – 13			5
9, 1 – 2,N.I.		27	
2 – 3			6
3 – 4		27	
4 – 5			
5 – 6			6
6 – 7			
7 – 8			
8 – 9			
9 – 10			6
10 – 11		27	
11 – 12			5
12 – 13			6
9, 1 – 2,S.I.			6
2 – 3			6
3 – 4		27	
4 – 5		27	
5 – 6			6

MEMBER LOCATION	REPAIRING CONCRETE STRUCTURES		REPAIR OF CRACKS
	PATCH	REPLACE	
	SQ. FT.	CU. FT.	LIN. FT.
6 – 7			
7 – 8			
8 – 9			6
9 – 10			6
10 – 11			
11 – 12			
12 – 13	2		6
9, 1 – 2,S.E.		31	
2 – 3		31	
3 – 4		31	
4 – 5		31	
5 – 6		31	
6 – 7	5		
7 – 8	3		
8 – 9			6
9 – 10	4		6
10 – 11		31	
11 – 12			
12 – 13	4		6
LOWER DECK COLUMNS			
9, 1, N.E.	28		1
2	28		
3	47		
4			
5			
9			
10			
11			
12			
13	68		
9, 1, N.I.	130		
2			
3			
4			
5			
9			
10			
11			
12			
13	35		
9, 1, S.I.	23		
2	3		
3	14		
4	6		
5	6		
9			
10			
11	5		
12			
13	7		
9, 1, S.E.	60		
2	3		
3			
4			
5			
9			
10			
11	2		
12			
13	50		
ARCH RIBS			
N.E.	387		
N.I.	200		
S.I.	360		
S.E.	9		
	(SUBTOTAL SPAN 9)		
	2680	1022	570
	(SPAN 9 TOTAL)		
	2930	2398	575.8
PIER 9			
UPPER SHAFTS			
FLOORBEAMS		REMOVED	
N.E.	12	149	
N.I.		REMOVED	
S.I.		REMOVED	

MEMBER LOCATION	REPAIRING CONCRETE STRUCTURES		REPAIR OF CRACKS
	PATCH	REPLACE	
	SQ. FT.	CU. FT.	LIN. FT.
S.E.	14	149	
LOWER WALL	165	2894	
ARCH BASE	360		
	(PIER 9 TOTAL)		
	551	3192	0
SPAN 10			
UPPER DECK FLOORBEAMS			
10,1		359	
2	9		
3	2		
4	5		
5	18		
6			
7	1		
8	6		
9	2		
10	14		
11	2		
12		359	
UPPER DECK JACK ARCHES			
10,1 – 2,N.E.		26	
2 – 3			
3 – 4			
4 – 5			
5 – 6			
6 – 7			
7 – 8	3		
8 – 9			
9 – 10			
10 – 11			
11 – 12		26	
10,1 – 2,N.I.		23	
2 – 3		27	
3 – 4	3		
4 – 5	4		
5 – 6	5		
6 – 7		27	
7 – 8			
8 – 9		27	
9 – 10		27	
10 – 11		27	
11 – 12		23	
10,1 – 2,S.I.		23	
2 – 3		27	
3 – 4		27	
4 – 5		27	
5 – 6		27	
6 – 7		27	
7 – 8		27	
8 – 9		27	
9 – 10		27	
10 – 11		27	
11 – 12		23	
10,1 – 2,S.E.		26	
2 – 3	4		
3 – 4			
4 – 5	5		
5 – 6	2		
6 – 7	2		
7 – 8			
8 – 9			
9 – 10	2		
10 – 11	1		
11 – 12		26	

FHWA REGION	STATE	PROJECT	
5	OHIO		

168
412

CUYAHOGA COUNTY
CUY – 6 – 14.99

MEMBER LOCATION	REPAIRING CONCRETE STRUCTURES		REPAIR OF CRACKS
	PATCH	REPLACE	
	SQ. FT.	CU. FT.	LIN. FT.
UPPER DECK COLUMNS			
10, 1, N.E.		31	
2	1		
3	2		
4	3		
5	5		
6	11		
7	15		
8	6		
9	3		
10	5		
11	9		
	(SUBTOTAL SPAN 10)		
	150	1323	0
	(PAGE TOTAL)		
	3381	5537	570

NOTES:
N – DENOTES CORBEL REPLACEMENT, NORTH SIDE
S – DENOTES CORBEL REPLACEMENT, SOUTH SIDE

COUNTY BRIDGE NO. 84

HOWARD NEEDLES TAMMEN & BERGENDOFF
ARCHITECTS ENGINEERS PLANNERS
HNTB

ESTIMATED REPAIR QUANTITIES
BR. NO. CUY – 6 – 1499
REHABILITATION OF
VETERANS MEMORIAL BRIDGE
(U.S. 6, 20, 42 & S.R. 3 OVER CUYAHOGA RIVER)
CLEVELAND CUYAHOGA COUNTY OHIO

DRAWN R.S.Y.	TRACED R.S.Y.	CHECKED W.J.V.	REVIEWED C.A.B.	REVISED
DATE 9/28/93	DATE 9/28/93	DATE 9/29/93	DATE 3/31/94	SHEET 36/270

\11646\CONCRETE\WMTAB13.DWG

MEMBER LOCATION	REPAIRING CONCRETE STRUCTURES		REPAIR OF CRACKS
	PATCH	REPLACE	
	SQ. FT.	CU. FT.	LIN. FT.
SPAN 10(CONTINUED)			
UPPER DECK COLUMNS(CONTINUED)			
12		31	
10,1, N.I.		42	
2		33	5.8
3	16		
4	10		
5	16		
6	5		
7	15		
8	12		
9	17		
10	17		
11		33	5.8
12		42	
10,1, S.I.		42	
2		33	5.8
3	7		
4	12		
5	3		
6		33	5.8
7	4		
8		33	5.8
9	1		
10	6		
11	23		
12		42	
10,1, S.E.		31	
2	10		
3		31	5.8
4	8		
5		31	5.8
6	7		
7	9		
8	8		
9	11		
10	7		
11		31	
12		31	
LOWER DECK EXTERIOR RAILING			
10,1 – 2,N.E.			21.8
2 – 3			15.8
3 – 4	3		15.8
4 – 5	2		15.8
5 – 6	2		15.8
6 – 7			15.8
7 – 8	6		15.8
8 – 9			15.8
9 – 10	9		19.8
10 – 11	10		20.8
11 – 12	6		27.8
10,1 – 2,S.E.	2		15.8
2 – 3	8		15.8
3 – 4	2		15.8
4 – 5	10		15.8
5 – 6	8		15.8
6 – 7	6		15.8
7 – 8	5		15.8
8 – 9	13		15.8
9 – 10	13		15.8
10 – 11	3		18.8
11 – 12		31	
LOWER DECK INTERIOR RAILING			
10, 1 – 2,N.I.		19	
2 – 3		19	
3 – 4	4		
4 – 5		19	
5 – 6		19	
6 – 7		19	
7 – 8			
8 – 9		19	
9 – 10		19	
10 – 11		19	
11 – 12		19	
10,1 – 2,S.I.		19	
2 – 3			

MEMBER LOCATION	REPAIRING CONCRETE STRUCTURES		REPAIR OF CRACKS
	PATCH	REPLACE	
	SQ. FT.	CU. FT.	LIN. FT.
3 – 4	9		
4 – 5	2		
5 – 6		19	
6 – 7			
7 – 8		19	
8 – 9			
9 – 10		19	
10 – 11		19	
11 – 12		19	
LOWER DECK FLOORBEAMS			
10, 1	28		
2	38		
3	45		
4	54		
5	57		
6	77		
7	82		
8	56		
9	51		
10	56		
11	58		
12	135		
LOWER DECK FLOORBEAM CORBELS			
10, 1	6		
2			
3			
4			
5			
6			
7	3		
8			
9			
10	1		
11	1		
12	2	N	
LOWER DECK JACK ARCHES			
10,1 – 2,N.E.			6
2 – 3			
3 – 4			
4 – 5			
5 – 6	6		
6 – 7			
7 – 8			
8 – 9			
9 – 10		31	
10 – 11	2		
11 – 12		31	
10,1 – 2,N.I.			6
2 – 3			
3 – 4			6
4 – 5			6
5 – 6			6
6 – 7			
7 – 8			6
8 – 9			
9 – 10		27	
10 – 11			6
11 – 12	2		6
10,1 – 2,S.I.	2		6
2 – 3	2		6
3 – 4	4		
4 – 5			6
5 – 6			6
6 – 7		27	
7 – 8			
8 – 9			6
9 – 10		27	
10 – 11	2		
11 – 12	4		6

MEMBER LOCATION	REPAIRING CONCRETE STRUCTURES		REPAIR OF CRACKS
	PATCH	REPLACE	
	SQ. FT.	CU. FT.	LIN. FT.
10,1 – 2,S.E.			6
2 – 3		31	
3 – 4		31	
4 – 5			6
5 – 6	4		6
6 – 7			
7 – 8	4		
8 – 9			
9 – 10		31	
10 – 11			
11 – 12	2		6
LOWER DECK COLUMNS			
10,1, N.E.	5		
2	6		
3			
4	8		
9			
10			
11			
12	32		5
10, 1, N.I.	40		
2	4		
3	4		
4			
9			
10			
11			
12	17		
10, 1, S.I.			
2			
3			
4	3		
9	3		
10	3		
11			
12	3		
10,1, S.E.			
2			
3			
4	2		
9			
10			
11			
12	5		
ARCH RIBS			
N.E.	443		
N.I.	420		
S.I.	155		
S.E.	138		
	(SUBTOTAL SPAN 10)		
	2422	1071	515.4
	(SPAN 10 TOTAL)		
	2572	2394	515.4
PIER 10			
FLOORBEAMS		REMOVED	
UPPER SHAFTS			
N.E.	5	145	
N.I.		REMOVED	
S.I.		REMOVED	
S.E.	22	145	
LOWER WALL	188	1336	
ARCH BASE	461		
	(PIER 10 TOTAL)		
	676	1626	0

MEMBER LOCATION	REPAIRING CONCRETE STRUCTURES		REPAIR OF CRACKS
	PATCH	REPLACE	
	SQ. FT.	CU. FT.	LIN. FT.
SPAN 11			
UPPER DECK FLOORBEAMS			
11,1		359	
2	5		
3	42		
4	2		
5	10	198	
6	4	202	
7	40		
8	8		
UPPER DECK JACK ARCHES			
11,1 – 2,N.E.		26	
2 – 3	3		
3 – 4	2		
4 – 5	3		
5 – 6		30	
6 – 7	2		
7 – 8	2		
11,8–12,1,N.E.			
11,1 – 2,N.I.		27	
2 – 3		27	
3 – 4		27	
4 – 5		27	
5 – 6		27	
6 – 7		27	
7 – 8		27	
11,1 – 2,S.I.		27	
2 – 3		27	
3 – 4		27	
4 – 5			
5 – 6	2		
6 – 7			
7 – 8	3		
11,1 – 2,S.E.		26	
2 – 3			
3 – 4			
4 – 5	2		
5 – 6			
6 – 7	6		
7 – 8	4		
UPPER DECK COLUMNS			
11, 1, N.E.		31	
2	8		
3	4		
4			
5	1		
6	2		
7	4		
8	2		
11, 1, N.I.		42	
2		33	5.8
3		33	5.8
4		33	5.8
5		33	2.9
6		33	2.9
7	20		
8	20		
11, 1, S.I.		42	
2	18		
3	22		
4	20		
5	15		
6	15		
7	12		
8		42	5.8
11, 1, S.E.		31	
2	2		
3			
4	6		
5	1		
6	5		
7			
8	5		

FHWA REGION	STATE	PROJECT	
5	OHIO		

169
412

CUYAHOGA COUNTY
CUY – 6 – 14.99

MEMBER LOCATION	REPAIRING CONCRETE STRUCTURES		REPAIR OF CRACKS
	PATCH	REPLACE	
	SQ. FT.	CU. FT.	LIN. FT.
LOWER DECK EXTERIOR RAILING			
11,1 – 2,N.E.	1		15.8
2 – 3	1		15.8
3 – 4	2		15.8
4 – 5			15.8
5 – 6			15.8
6 – 7	6		15.8
7 – 8	1		15.8
11,8–12,1,N.E.	4		15.8
11,1 – 2,S.E.	9		15.8
2 – 3	3		15.8
3 – 4	5		15.8
4 – 5	2		15.8
5 – 6	7		15.8
6 – 7	3		15.8
7 – 8	1		15.8
LOWER DECK INTERIOR RAILING			
11, 1 – 2,N.I.		19	
2 – 3		19	
3 – 4		19	
	(SUBTOTAL SPAN 11)		
	367	1521	266
	(PAGE TOTAL)		
	3465	4218	781.4

NOTES:
N – DENOTES CORBEL REPLACEMENT, NORTH SIDE
S – DENOTES CORBEL REPLACEMENT, SOUTH SIDE

COUNTY BRIDGE NO. 84

HOWARD NEEDLES TAMMEN & BERGENDOFF
ARCHITECTS ENGINEERS PLANNERS
HNTB

ESTIMATED REPAIR QUANTITIES
BR. NO. CUY – 6 – 1499
REHABILITATION OF
VETERANS MEMORIAL BRIDGE
(U.S. 6, 20, 42 & S.R. 3 OVER CUYAHOGA RIVER)
CLEVELAND CUYAHOGA COUNTY OHIO

DRAWN R.S.Y.	TRACED R.S.Y.	CHECKED W.J.V.	REVIEWED C.A.B.	REVISED
DATE 9/29/93	DATE 9/29/93	DATE 9/29/93	DATE 3/31/94	SHEET 37/270

\11646\CONCRETE\VMTAB14.DWG

MEMBER LOCATION	REPAIRING CONCRETE STRUCTURES PATCH SQ. FT.	REPAIRING CONCRETE STRUCTURES REPLACE CU. FT.	REPAIR OF CRACKS LIN. FT.
SPAN 11(CONTINUED)			
LOWER DECK INTERIOR RAILING(CONTINUED)			
11, 4 – 5 N.I.		19	
5 – 6		19	
6 – 7		19	
7 – 8		19	
11,8 TO 12,1, N.I.		19	
11, 1 – 2,S.I.		19	
2 – 3		19	
3 – 4	8		
4 – 5		19	
5 – 6		19	
6 – 7			
7 – 8		19	
11,8 TO 12,1, S.I.		19	
LOWER DECK FLOORBEAMS			
11, 1	40	81	
2	76		
3	32		
4	87		
5	78		
6	55		
7	67		
8	30		
LOWER DECK FLOORBEAM CORBELS			
11, 1			
2			
3			
4			
5		S	
6		N, S	
7			
8			
12, 1, N			
LOWER DECK JACK ARCHES			
11,1 – 2,N.E.		31	
2 – 3		31	
3 – 4			6
4 – 5			
5 – 6			
6 – 7		31	
7 – 8	3		
11,8 TO 12,1,N.E.			
11,1 – 2,N.I.			6
2 – 3	2		
3 – 4	2		
4 – 5			
5 – 6			
6 – 7			6
7 – 8			6
11,8 TO 12,1,N.I.			
11,1 – 2,S.I.			6
2 – 3	4		
3 – 4	2		6
4 – 5	2		6
5 – 6			6
6 – 7			
7 – 8	3		
11,1 – 2,S.E.	3		6
2 – 3		31	
3 – 4	5		6
4 – 5	6		
5 – 6		31	
6 – 7		31	
7 – 8		31	

MEMBER LOCATION	REPAIRING CONCRETE STRUCTURES PATCH SQ. FT.	REPAIRING CONCRETE STRUCTURES REPLACE CU. FT.	REPAIR OF CRACKS LIN. FT.
LOWER DECK COLUMNS			
11,1, N.E.	6		
2	2		
3			
4			
5	2		
6	5		
7	16		
8			
11,1, N.I.	17		
2			
3			
4	2		
5			
6			
7	2		
8	5		
11,1, S.I.	6		
2			
3			
4			
5			
6	7		
7	4		
8	3		
11,1, S.E.	18		
2			
3			
4	10		
5			
6			
7	7		
8	2		
ARCH RIBS			
N.E.	124		
N.I.	22		
S.I.	139		
S.E.	229		
	(SUBTOTAL SPAN 11)		
	1133	507	60
	(SPAN 11 TOTAL)		
	1500	2028	326
PIER 11			
UPPER SHAFT			
N.E.		668	
S.E.	25	262	
LOWER WALL		1105	
ARCH BASE	1205	548	
	(PIER 11 TOTAL)		
	1230	2583	0
SPAN 12			
UPPER DECK FLOORBEAMS			
12,1		746	
2	6		
3	12		
4	31		
5	34		
6	19		
7	37		
8	39		
9	6		
10	24		
11	10		
12	40		
UPPER DECK JACK ARCHES			
12,2 – 3,N.E.	4		
3 – 4	1		
4 – 5	3		
5 – 6	3		
6 – 7	1		

MEMBER LOCATION	REPAIRING CONCRETE STRUCTURES PATCH SQ. FT.	REPAIRING CONCRETE STRUCTURES REPLACE CU. FT.	REPAIR OF CRACKS LIN. FT.
7 – 8	1		
8 – 9	1		
9 – 10	10		
10 – 11	2		
11 – 12		31	
12,12 TO 13,1,N.E.		31	
12,1 – 2,N.I.		29	
2 – 3	2		
3 – 4	4		
4 – 5	11		
5 – 6	9		
6 – 7	1		
7 – 8	6		
8 – 9	3		
9 – 10		29	
10 – 11		29	
11 – 12	6		
12,1 – 2,S.I.			
2 – 3	2		10
3 – 4	3		2
4 – 5		29	
5 – 6	1		
12,6 – 7 S.I.	1		
7 – 8	1		
8 – 9	6		
9 – 10	3		
10 – 11	10		4
11 – 12		29	
12,1 – 2,S.E.	6		
2 – 3	3		2
3 – 4	1		
4 – 5	1		2
5 – 6			
6 – 7			
7 – 8			
8 – 9			
9 – 10	1		
10 – 11	1		1
11 – 12		31	
UPPER DECK COLUMNS			
12, 1, N.E.		31	
2		31	5.8
3	6		
4	6		
5	– / 17#	31	
6	2 / 51#		
7	– / 68#		
8	– / 71#		
9	2 / 57#		
10	– / 29#		
11	9		
12		31	5.8
12, 1, N.I.		63	
2		33	5.8
3		33	5.8
4	8		
5	5 / 15#		
6	2 / 45#		
7	– / 61#		
8	– / 62#		
9	1 / 51#		
10	5 / 25#		
11	3		
12			
12, 1, S.I.		33	
2	8		
3	9		
4	9 / 15#		
5	1 / 45#		
6	– / 61#		
7	– / 62#		
8	1 / 51#		
9	– / 25#	33	
10	2		
11	4		
12		33	5.8

MEMBER LOCATION	REPAIRING CONCRETE STRUCTURES PATCH SQ. FT.	REPAIRING CONCRETE STRUCTURES REPLACE CU. FT.	REPAIR OF CRACKS LIN. FT.
12, 1, S.E.		31	
2			
3	6		
4	2 / 17#		
5	2 / 51#		
6	– / 69#		
7	– / 71#		
8	– / 57#		
9	2 / 29#		
10			
11			
12		31	5.8
LOWER DECK EXTERIOR RAILING AND FASCIA			
12,2 – 3 N.E.	2		
3 – 4	3		
4 – 5		3	
5 – 6		27	
6 – 7		32	
7 – 8		32	
8 – 9		32	
9 – 10		31	
10 – 11		11	
11 – 12	6		
12,12 TO 13,1,N.E.		32	
12,1 – 2,S.E.			
2 – 3			
3 – 4		3	
4 – 5		27	
5 – 6		32	
6 – 7		32	
7 – 8		32	
8 – 9		31	
9 – 10		11	
10 – 11			
11 – 12			
LOWER DECK INTERIOR RAILING			
12, 1 – 2,N.I.		19	
2 – 3		19	
3 – 4		19	
12, 1 – 2,S.I.		19	
2 – 3		19	
LOWER DECK FLOORBEAMS			
2	57#		
3	60#		
4			
5	314#		
6	129#		
7	834#		
8	89#		
9	161#		
10			
11	140#		
11A	53#		
12	33#		
12A	30#		

FHWA REGION	STATE	PROJECT	
5	OHIO		

170/412

CUYAHOGA COUNTY
CUY – 6 – 14.99

MEMBER LOCATION	REPAIRING CONCRETE STRUCTURES PATCH SQ. FT.	REPAIRING CONCRETE STRUCTURES REPLACE CU. FT.	REPAIR OF CRACKS LIN. FT.
CROSS BEAMS			
12,3 – 5,N.E.	60#		
3 – 5,N.I.*	24#		
3 – 5,N.I.**	24#		
2 – 4,S.I.*	43#		
2 – 4,S.I.**	44#		
2 – 4,S.E.	37#		
11–14,N.E.	23#		
11–14,N.I.*	4#		
11–14,N.I.**	5#		
10–12,S.I.*	38#		
10–12,S.I.**	24#		
10–12,S.E.	46#		
WALL BETWEEN ARCH AND LOWER DECK			
12,WEST N.E.	2		
N.I.*			
N.I.**			
S.I.*			
S.I.**			
S.E.			
	(SUBTOTAL SPAN 12)		
	3851	1861	55.8
	(PAGE TOTAL)		
	6214	4951	115.8

NOTES:

N – DENOTES CORBEL REPLACEMENT, NORTH SIDE
S – DENOTES CORBEL REPLACEMENT, SOUTH SIDE
– DENOTES AREA OF EXISTING CONCRETE ENCASED STEEL MEMBER TO BE REPAIRED
* NORTH SIDE
** SOUTH SIDE

COUNTY BRIDGE NO. 84

HOWARD NEEDLES TAMMEN & BERGENDOFF
ARCHITECTS ENGINEERS PLANNERS
HNTB

ESTIMATED REPAIR QUANTITIES
BR. NO. CUY – 6 – 1499
REHABILITATION OF
VETERANS MEMORIAL BRIDGE
(U.S. 6, 20, 42 & S.R. 3 OVER CUYAHOGA RIVER)
CLEVELAND CUYAHOGA COUNTY OHIO

DRAWN R.S.Y.	TRACED R.S.Y.	CHECKED W.J.V.	REVIEWED C.A.B.	REVISED
DATE 9/29/93	DATE 9/29/93	DATE 9/30/93	DATE 3/31/94	SHEET 38/270

\11646\CONCRETE\VMTAB15.DWG

MEMBER LOCATION	REPAIRING CONCRETE STRUCTURES		REPAIR OF CRACKS
	PATCH	REPLACE	
	SQ. FT.	CU. FT.	LIN. FT.
SPAN 12(CONTINUED)			
WALL BETWEEN ARCH AND LOWER DECK(CONTINUED)			
12, EAST N.E.	4		
N.I.*	6		
N.I.**	6		
S.I.*			
S.I.**			
S.E.	4		
FASCIA BEAMS			
12, NORTH	55#		
SOUTH	33#		
ARCH RIBS			
N.E.	440#		70
N.I.	306#		30
S.I.	382#		
S.E.	417#		
	(SUBTOTAL SPAN 12)		
	1653	0	100
	(SPAN 12 TOTAL)		
	5504	1861	155.8
PIER 12			
UPPER SHAFT			
N.E.		787	
S.E.	19	263	
LOWER WALL		640	
ARCH BASE	1352	180	
	(PIER 12 TOTAL)		
	1371	1870	0
SPAN 13			
UPPER DECK FLOORBEAMS			
13,1		737	
2		171	
3		336	
4	21	171	
5	27		
6	38		
7	17		
8		542	
UPPER DECK JACK ARCHES			
13,2 – 3 N.E.	4		
3 – 4			
4 – 5	2		3
5 – 6	4		
6 – 7			
7 – 8			
13,1 – 2,N.I.			
2 – 3			
3 – 4		27	
4 – 5		27	
5 – 6	10		
6 – 7		27	
7 – 8		27	
13,1 – 2,S.I.		27	
2 – 3		27	
3 – 4		27	
4 – 5	8		
5 – 6		27	
6 – 7		27	
7 – 8		27	
13,1 – 2,S.E.		30	
2 – 3		30	
3 – 4		30	
4 – 5			
5 – 6			
6 – 7			
7 – 8		30	
UPPER DECK COLUMNS			
13,1 N.E.		31	
2		31	5.8
3	1		
4	2		

MEMBER LOCATION	REPAIRING CONCRETE STRUCTURES		REPAIR OF CRACKS
	PATCH	REPLACE	
	SQ. FT.	CU. FT.	LIN. FT.
5	1		
6	1		
7	1		
8		32	
13,1, N.I.		63	
2		34	5.8
3		35	2.9
4	2		
5	4		
6			
7	3		
8		46	
13,1, S.I.		33	
2	6		
3			
4	2		
5			
6	1		
7	10		
8		46	
13,1, S.E.		31	
2	3		
3			
4	6		
5	2		
6			
7	3		
8		31	
LOWER DECK EXTERIOR RAILING AND FASCIA			
13,2 – 3 N.E.	17		12
3 – 4			
4 – 5			2
5 – 6	5		
6 – 7			
7 – 8			
13,1 – 2 S.E.	1		
2 – 3			
3 – 4			
4 – 5			
5 – 6			
6 – 7			
7 – 8			
LOWER DECK FLOORBEAMS			
2	70		
3	50	325	
4	30	328	
5	157	330	
6	62	437	
7	30	335	
8	36		
NORTH EXTERIOR WALL			
N.E.	581		
ARCH WALLS			
N.I.			
S.I.			
S.E.			
ARCH RIBS			
N.I.	38		
S.I.			
S.E.	36		
	(SPAN 13 TOTAL)		
	1292	4515	31.5
EAST ABUTMENT			
FLOORBEAMS		REMOVED	
UPPER SHAFT			
N.E.		813	
N.I.		REMOVED	
S.I.		REMOVED	
S.E.	122	239	
NORTH FACE	142		
WEST FACE	40		
SOUTH FACE			
ARCH BASE	8		

MEMBER LOCATION	REPAIRING CONCRETE STRUCTURES		REPAIR OF CRACKS
	PATCH	REPLACE	
	SQ. FT.	CU. FT.	LIN. FT.
	(EAST ABUTMENT TOTAL)		
	312	1052	0
EAST SIDE STATION			
UPPER DECK FLOORBEAMS			
E.S. 1		542	
2		323	
3		175	
4		323	
5		323	
6		323	
7		169	
8		337	
9		337	
10	16	337	
11	4	337	
12		337	
13	15	337	
14		337	
15	8	337	
16		299	
17		482	
18		518	
19		516	
20		487	
21		508	
UPPER DECK CROSS BEAMS			
E.S. 9 – 10, J		REMOVED	
10 – 13		REMOVED	
E.S. 9 – 10, K		REMOVED	
10 – 13		REMOVED	
UPPER DECK JACK ARCHES			
E.S.1 – 2 N.E.		26	
2 – 3	2		
3 – 4	3		
4 – 5		30	
5 – 6		30	
6 – 7		30	
7 – 8		30	
E.S.1 – 2 N.I.		23	
2 – 3	3		
3 – 4	2		
4 – 5	3		
5 – 6	4		
6 – 7		27	
7 – 8		27	
8 – 9		27	
9 – 10		27	
10 – 11		27	
11 – 12		27	
12 – 13	4		
13 – 14		27	
14 – 15	2		
15 – 16		27	
16 – 17	4		
17 – 18		27	
18 – 19		27	
19 – 20		27	
20 – 21		27	
E.S.1 – 2 S.I.		23	
2 – 3	2		
3 – 4		27	
4 – 5	5		
5 – 6	8		
6 – 7			
7 – 8	4		
8 – 9			
9 – 10	6		
10 – 11	8		
11 – 12		27	
12 – 13			
13 – 14	17		
14 – 15	6		
15 – 16	12		
16 – 17		27	

MEMBER LOCATION	REPAIRING CONCRETE STRUCTURES		REPAIR OF CRACKS
	PATCH	REPLACE	
	SQ. FT.	CU. FT.	LIN. FT.
17 – 18		27	
18 – 19		27	
19 – 20		27	
20 – 21		27	
E.S.1 – 2 S.E.		26	
2 – 3		30	
3 – 4		30	
4 – 5		30	
5 – 6		30	
6 – 7		30	
7 – 8		30	
8 – 9		30	
9 – 10		30	
10 – 11		30	
11 – 12		30	
12 – 13		30	
13 – 14		30	
14 – 15		30	
15 – 16		30	
16 – 17		30	
17 – 18		30	
18 – 19		30	
19 – 20		30	
E.S. 7, S.E.–J	4		
E.S. 7, J–K	2		
E.S. 7, K–L			
E.S.7 – 8 ,L	3		
8 – 9	5		
9 – 10	2		
10 – 11	10		
11 – 12	3		
12 – 13			
13 – 14			
14 – 15			
UPPER DECK COLUMNS			
E.S. 1 N.E.		32	
2			
3			
4			
5	6		
6			
7			
E.S. 1 N.I.		46	
2	2		
3			
4			
5	3		
6	4		
7	5		
8			
9	2		
10	2		
11	2		
12			
13			
14			
15		34	5.8
16	5		
17		35	
18		35	
19			
20			
21		35	
E.S. 1 S.I.		46	
2			
3	3		
4	2		
5			
6	2		
7	1		
8	6		
9			
	(SUBTOTAL EAST SIDE STATION)		
	212	9218	5.8
	(PAGE TOTAL)		
	4840	16655	137.3

FHWA REGION	STATE	PROJECT	
5	OHIO		

171/412

CUYAHOGA COUNTY
CUY – 6 – 14.99

MEMBER LOCATION	REPAIRING CONCRETE STRUCTURES		REPAIR OF CRACKS
	PATCH	REPLACE	
	SQ. FT.	CU. FT.	LIN. FT.

NOTES:

– DENOTES AREA OF EXISTING CONCRETE ENCASED STEEL MEMBER TO BE REPAIRED

* NORTH SIDE

** SOUTH SIDE

COUNTY BRIDGE NO. 84

HOWARD NEEDLES TAMMEN & BERGENDOFF
ARCHITECTS ENGINEERS PLANNERS
HNTB

ESTIMATED REPAIR QUANTITIES
BR. NO. CUY – 6 – 1499
REHABILITATION OF
VETERANS MEMORIAL BRIDGE
(U.S. 6, 20, 42 & S.R. 3 OVER CUYAHOGA RIVER)

CLEVELAND CUYAHOGA COUNTY OHIO

DRAWN R.S.Y.	TRACED R.S.Y.	CHECKED W.J.V.	REVIEWED C.A.B.	REVISED
DATE 9/29/93	DATE 9/29/93	DATE 9/30/93	DATE 3/31/94	SHEET 39/270

\11646\CONCRETE\VMTAB16.DWG

MEMBER LOCATION	REPAIRING CONCRETE STRUCTURES		REPAIR OF CRACKS
	PATCH	REPLACE	
	SQ. FT.	CU. FT.	LIN. FT.
EAST SIDE STATION(CONTINUED)			
UPPER DECK COLUMNS(CONTINUED)			
10	1		
11	1		
12			
13			
14	1		
15	2		
16	6		
17			
18	6		
19			
20			
21			
E.S. 1 S.E.		31	
2			1
3			
4			
5			
6			
7	4		
8	6		
9	3		
10	2		
11			
12			
13			
14			
15	6		
16		33	
17	3		
18	4		
19			
20			
E.S. 7, K			
E.S. 7, J			
E.S. 7, L			
8, L			
9, L			
10, L	2		
11, L			
12, L			
13, L			
14, L			
15, L			
18, L	4		
LOWER DECK EXTERIOR RAILING AND FASCIA			
E.S.1 – 2 N.E.	29		
2 – 3	42		
3 – 4	19		
4 – 5	3		
E.S. 1, S.E.–K	20		
E.S.1 – 2,K	10		
2 – 3	25		
3 – 4	56		
4 – 5	20		
5 – 6		31	
6 – 7			
E.S. 7, J–K			
E.S. 7, K–L			
E.S.7 – 8			
8 – 9	2		
9 – 10	1		
10 – 11			
11 – 12	2		
12 – 13			
UPPER DECK WALL			
E.S.13 – 14, L			
14 – 15			
WALLS BELOW LOWER DECK			
E.S. N.	70		
E.S. S.	200		
MARQUIS POSTS			
E.S. 1			
2			
3			4

MEMBER LOCATION	REPAIRING CONCRETE STRUCTURES		REPAIR OF CRACKS
	PATCH	REPLACE	
	SQ. FT.	CU. FT.	LIN. FT.
4	2		2
5			
6		10	
SOUTH WALL BEAMS			
1 – 2	6		
2 – 3			
3 – 4	3		
4 – 5			
5 – 6	2		
6 – 7			2
7 – S.E. TO J	15		
7 – J TO K	26		
7 – K TO L			
7 – 8, L	8		
8 – 9	4		
9 – 10	6		
10 – 11	18		
11 – 12	13		
12 – 13	4		
	(SUBTOTAL EAST SIDE STATION)		
	657	105	9
	(TOTAL EAST SIDE STATION)		
	869	9323	14.8
EAST SIDE SUBWAY			
UPPER DECK JACK ARCHES			
E.S.22– 23, M	6		
23– 24	11		
24– 25	20		
25– 26	2		
26– 27	20		
E.S.22– 23, N	8		
23– 24	1		
24– 25			
25– 26	2		
26– 27	34		
27– 28			
28– 29			
E.S.22– 23, P			
23– 24			
24– 25	9		
25– 26			
26– 27	29		
27– 28	2		
28– 29			
E.S.22– 23, R			
23– 24			
24– 25	20		
25– 26			
26– 27	8		
27– 28			
28– 29			
UPPER DECK COLUMNS			
E.S. 22, M			
23	3		
24	2		
25			
26			
27	4		
E.S. 22, N	2		
23			
24			
25			
26	2		
27	2		
28	3		
29	2		
E.S. 22, P	4		
23	10		
24	5		
25			
26	4		
27			
28			
29			
E.S. 22, R	6		

MEMBER LOCATION	REPAIRING CONCRETE STRUCTURES		REPAIR OF CRACKS
	PATCH	REPLACE	
	SQ. FT.	CU. FT.	LIN. FT.
23	6		
24	4		
25	4		
26			
27			
28	1		
29			
WALLS			
NORTH	677		
N	100		
P	108		2
R	98		
SOUTH	472		
	(TOTAL EAST SIDE SUBWAY)		
	1691	0	2
	(PAGE TOTAL)		
	2348	105	11
	(PROJECT TOTAL)		
	62,839	149,179	7421

	62,839	TOTAL SQ. FT. TO BE PATCHED OR SEALED
–	6,800	ITEM SPECIAL, REPAIRING CONCRETE STRUCTURES WITH SOLVENT FREE EPOXY RESIN
–	5,134	ITEM SPECIAL, REPAIR STRUCTURAL STEEL MEMBERS ENCASED IN CONCRETE
=	50,905	ITEM SPECIAL, PATCHING CONCRETE STRUCTURES

FHWA REGION	STATE	PROJECT	
5	OHIO		

172/412

CUYAHOGA COUNTY
CUY – 6 – 14.99

COUNTY BRIDGE NO. 84

HOWARD NEEDLES TAMMEN & BERGENDOFF
ARCHITECTS ENGINEERS PLANNERS
HNTB

ESTIMATED REPAIR QUANTITIES
BR. NO. CUY – 6 – 1499
REHABILITATION OF
VETERANS MEMORIAL BRIDGE
(U.S. 6, 20, 42 & S.R. 3 OVER CUYAHOGA RIVER)

CLEVELAND CUYAHOGA COUNTY OHIO

DRAWN	TRACED	CHECKED	REVIEWED	REVISED
R.S.Y.	R.S.Y.	W.J.V.	C.A.B.	
DATE 9/29/93	DATE 9/29/93	DATE 9/30/93	DATE 3/31/94	SHEET 40/270

\11646\CONCRETE\VMTAB17.DWG

FHWA REGION	STATE	PROJECT	
5	OHIO		

173/412

CUYAHOGA COUNTY
CUY – 6 – 14.99

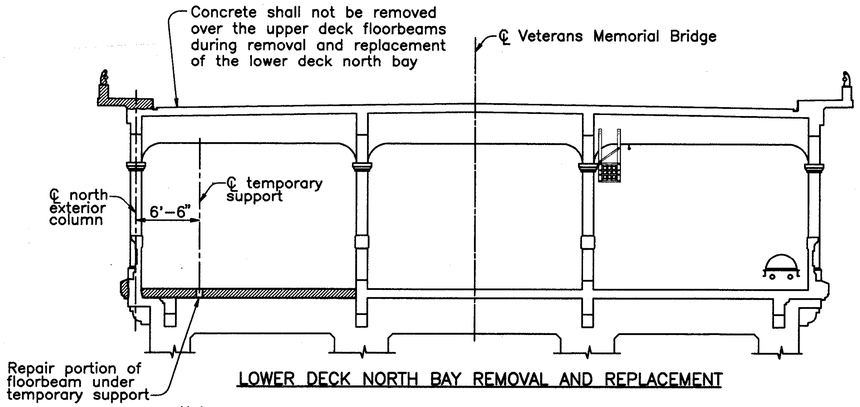

LOWER DECK NORTH BAY REMOVAL AND REPLACEMENT

Note:
Prior to removing the north bay of the existing lower deck over the top of each lower deck floorbeam, a temporary support shall be installed as shown. The portion of the deck under the support shall be removed and repaired prior to installation of the support. The size of the repaired area shall not exceed 8–1/2" square, to permit placement of rebar for the new lower deck. The support shall be preloaded to a force of 37 kips. The preload is based on the upper deck sidewalk, railing, parapet and deck slab between upper deck floorbeams being removed. The temporary support shall remain in place until the new walkway and concrete over the tops of the north bay lower deck floorbeams has been placed and cured.

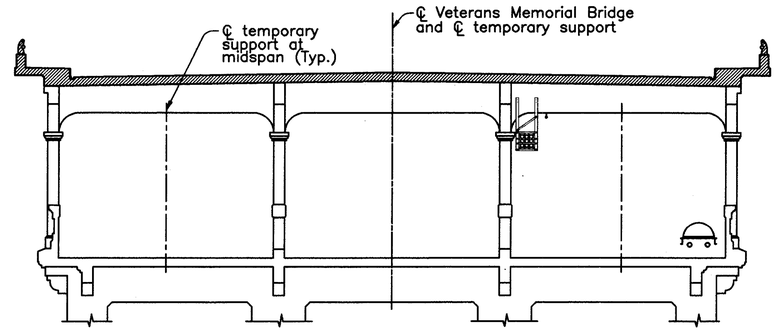

UPPER DECK REMOVAL

Note:
The railing, parapet, sidewalk and/or upper deck between floorbeams shall be removed first but do not have to be removed simultaneously in all bays. After removal of the upper deck between floorbeams in all bays is complete and prior to removing the upper deck over each floorbeam, temporary supports shall be installed as shown. The supports do not require preload, but must be wedged tight. The supports shall remain in place until the new upper deck (excluding sidewalks and railings) has been placed and cured.

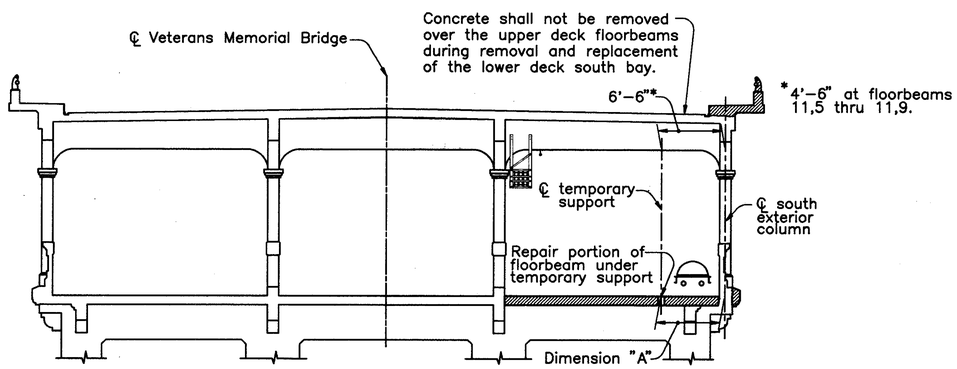

LOWER DECK SOUTH BAY REMOVAL AND REPLACEMENT

Note:
Prior to removing the south bay of the existing lower deck over the top of each lower deck floorbeam, a temporary support shall be installed as shown. The portion of the deck under the support shall be removed and repaired prior to installation of the support. The size of the repaired area shall not exceed 8–1/2" square, to permit placement of rebar for the new lower deck. The support shall be preloaded to a force of 37 kips, except as noted. The preload is based on the upper deck sidewalk, railing, parapet and deck slab between upper deck floorbeams being removed. The temporary support shall remain in place until the south bay of the new lower deck has been placed and cured. For sloped temporary supports, the supports shall be anchored to the floorbeams at each end. The anchorage shall be adequate to develop 6 kips parallel with the floorbeam.

SPAN	FLOORBEAM	DIM. "A"
1 AND 2	ALL	6'–6"
3 AND 5	ALL	7'–6"**
6 THRU 10	ALL	6'–6"
11	11,2	7'–6"**
11	11,3	8'–4"**
11	11,4	9'–3"**
11	11,5 THRU 11,9	4'–6"

**Preload at these locations shall be 35 kips.

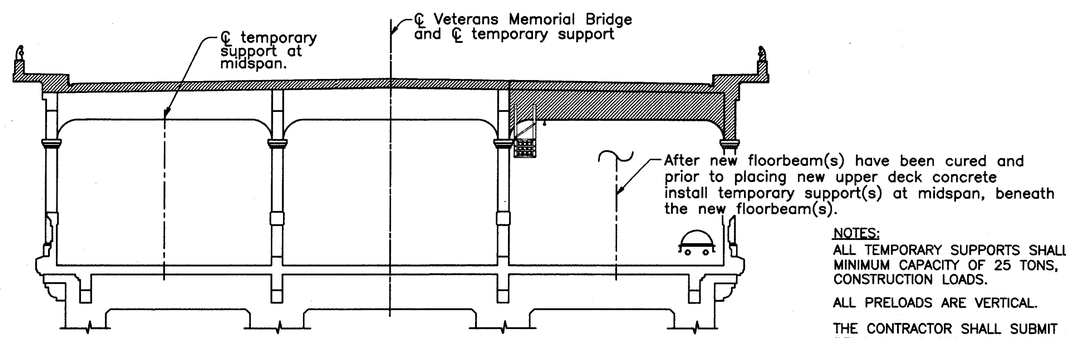

EXTERIOR BAY UPPER DECK FLOORBEAM REMOVAL/REPLACEMENT

Note:
Prior to removal of a floorbeam in the exterior bay(s), the upper deck slab between floorbeams must be removed in all bays. Temporary supports shall be installed in the adjacent bay(s) prior to removal of the floorbeam. The supports shall remain in place until the new upper deck (excluding sidewalks and railings) has been placed and cured.

NOTES:
ALL TEMPORARY SUPPORTS SHALL HAVE A MINIMUM CAPACITY OF 25 TONS, EXCLUDING CONSTRUCTION LOADS.

ALL PRELOADS ARE VERTICAL.

THE CONTRACTOR SHALL SUBMIT A PROPOSED DECK REMOVAL AND REPLACEMENT PROCEDURE TO THE ENGINEER FOR APPROVAL. THE PROCEDURE SHALL CONSIDER EFFECTS OF UNBALANCED DEAD AND LIVE LOADS UPON THE STRUCTURE DURING CONSTRUCTION AND BE SEALED BY A REGISTERED PROFESSIONAL ENGINEER.

COUNTY BRIDGE NO. 84

HOWARD NEEDLES TAMMEN & BERGENDOFF
ARCHITECTS ENGINEERS PLANNERS
HNTB

CONSTRUCTION REQUIREMENTS
BR. NO. CUY – 6 – 1499
REHABILITATION OF
VETERANS MEMORIAL BRIDGE
(U.S. 6, 20, 42 & S.R. 3 OVER CUYAHOGA RIVER)

CLEVELAND CUYAHOGA COUNTY OHIO

DRAWN B.E.B.	TRACED B.E.B	CHECKED F.S.J.	REVIEWED C.A.B.	REVISED
DATE 1/25/94	DATE 1/25/94	DATE 4/7/94	DATE 4/7/94	SHEET 41/270

\11646\SEQ

FHWA REGION	STATE	PROJECT	
5	OHIO		

174 / 412

CUYAHOGA COUNTY
CUY – 6 – 14.99

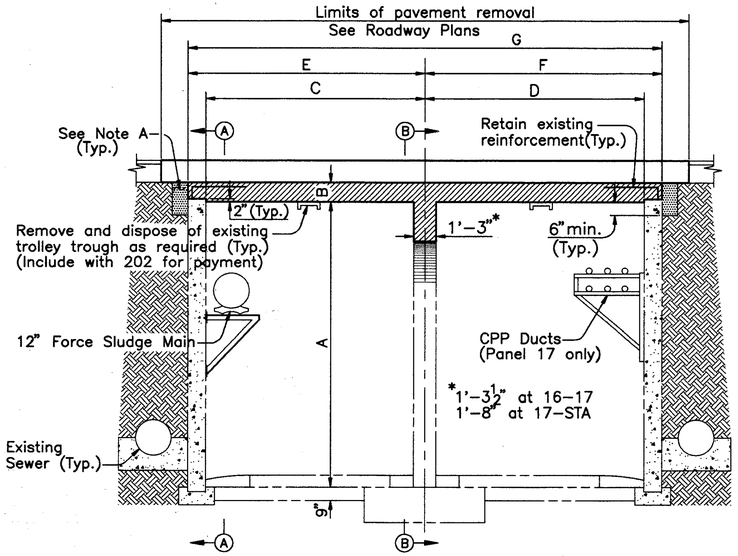

TYPICAL REMOVAL AT SLAB EXPANSION JOINTS – W.25TH STREET TUNNEL
(Looking Back Station)

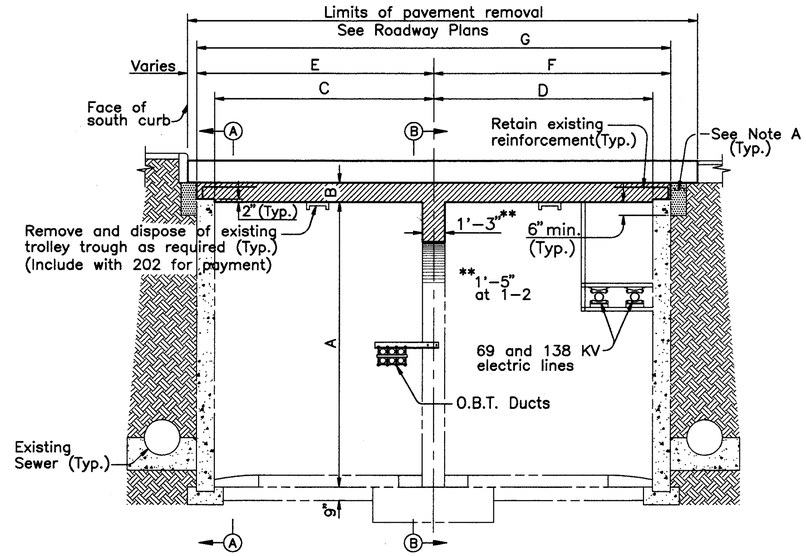

TYPICAL REMOVAL AT SLAB EXPANSION JOINTS – DETROIT AVENUE TUNNEL
(Looking Back Station)

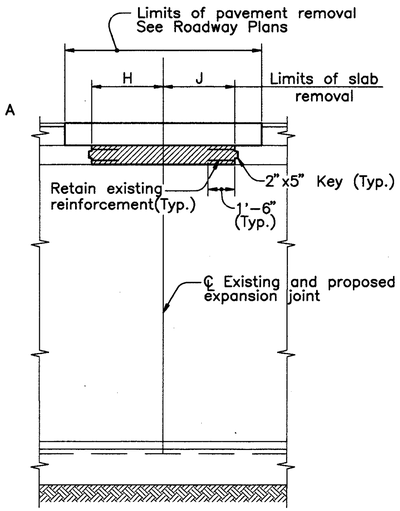

SECTION A-A

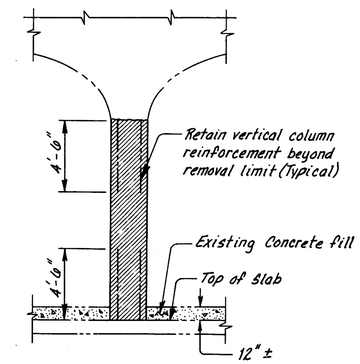

TYPICAL COLUMN REMOVAL DETAIL
(O.B.T. duct support in Detroit Ave. Tunnel not shown)

Note A:
Excavate and backfill as required to complete roof slab replacement and waterproofing. Payment shall be considered as incidental to roof slab concrete.

TUNNEL DIMENSIONS - W. 25TH STREET

LOCATION	A	B	C	D	E	F	G
CLOSURE WALL	16'-0"	1'-1"	12'-3"	12'-3"	13'-3"	13'-3"	26'-6"
11-12	16'-0"	1'-1"	12'-3"	12'-3"	13'-3"	13'-3"	26'-6"
12-13	16'-0"	1'-1"	12'-3"	12'-3"	13'-3"	13'-3"	26'-6"
13-14	16'-0"	1'-1"	12'-3"	12'-3"	13'-3"	13'-3"	26'-6"
14-15	16'-0"	1'-1"	12'-3"	12'-3"	13'-3"	13'-3"	26'-6"
15-16	16'-0"	1'-1"	12'-6-1/2"	12'-6-1/2"	13'-6-1/2"	13'-6-1/2"	27'-1"
16-17	15'-10"	1'-3"	13'-7"	12'-10"	14'-7"	13'-10"	28'-5"
17-STA	15'-5-1/2"	1'-7-1/2"	19'-10-5/8"	22'-1-1/4"	20'-10-5/8"	23'-1-1/4"	43'-11-7/8"

TUNNEL DIMENSIONS - DETROIT AVENUE

LOCATION	A	B	C	D	E	F	G
CLOSURE WALL	15'-10"	1'-3"	14'-4-1/8"	13'-8-1/2"	15'-4-1/8"	14'-8-1/2"	30'-0-5/8"
1-2	15'-10"	1'-3"	14'-1-5/8"	14'-6-1/2"	15'-1-5/8"	15'-6-1/2"	30'-8-1/8"
2-3	15'-10"	1'-3"	13'-4-1/4"	14'-2-1/4"	14'-4-1/4"	15'-2-1/4"	29'-6-1/2"
3-4	15'-10"	1'-3"	13'-3-5/8"	13'-5-1/8"	14'-3-5/8"	14'-5-1/8"	28'-8-3/4"
4-5	16'-0"	1'-1"	12'-5-7/8"	12'-5-7/8"	13'-5-7/8"	13'-5-7/8"	26'-11-3/4"
5-6	16'-0"	1'-1"	12'-3"	12'-3"	13'-3	13'-3"	26'-6"
6-7	16'-0"	1'-1"	12'-3"	12'-3"	13'-3"	13'-3"	26'-6"
7-8	16'-0"	1'-1"	12'-3"	12'-3"	13'-3"	13'-3"	26'-6"
8-9	16'-0"	1'-1"	12'-3"	12'-3"	13'-3"	13'-3"	26'-6"
9-10	16'-0"	1'-1"	12'-3"	12'-3"	13'-3"	13'-3"	26'-6"
10-STA	16'-0"	1'-1"	12'-3"	12'-3"	13'-3"	13'-3"	26'-6"

NOTES:

TUNNEL WALLS SHALL BE SHORED PRIOR TO REMOVAL OF TUNNEL ROOF SLAB.

SHORING TO REMAIN IN PLACE UNTIL NEW ROOF SLAB IS IN PLACE AND CURED.

▨ – DENOTES PORTIONS OF EXISTING TUNNEL ROOF SLAB TO BE REMOVED.

TUNNEL DIMENSIONS ARE GIVEN AT CENTERLINE OF EXPANSION JOINTS.

RETAIN ALL EXISTING REINFORCEMENT EXTENDING FROM EXISTING STRUCTURE INTO PORTIONS OF REBUILT STRUCTURE.

ALL EXISTING REINFORCEMENT IS NOT SHOWN.

FOR UTILITY SUPPORT DETAILS SEE SHEETS 232/270, 233/270 AND 233A/270.

FOR DETROIT AVENUE TUNNEL REPLACEMENT DETAILS SEE SHEET 65/270.

FOR WEST 25TH ST. TUNNEL REPLACEMENT DETAILS SEE SHEET 64/270.

THE FOLLOWING ABBREVIATIONS ARE USED:

(N) – NORTH
(S) – SOUTH
(E) – EAST
(W) – WEST

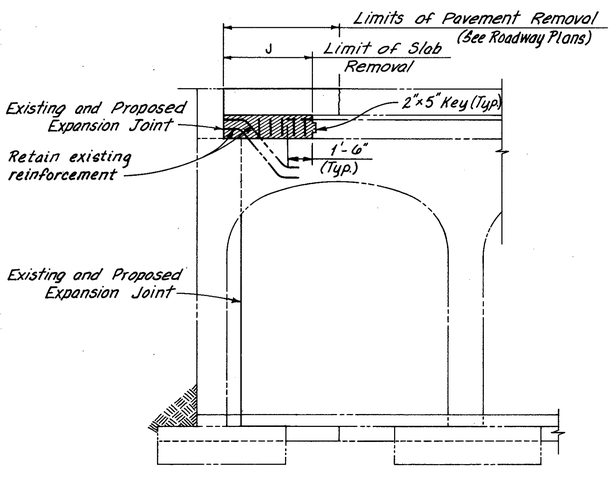

SECTION B-B
(At Closure Walls)

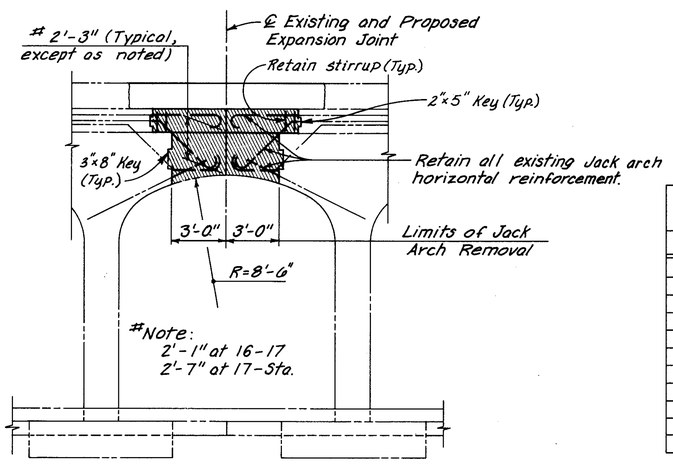

SECTION B-B
(At Jack Arches)

REMOVAL LIMITS DETROIT AVENUE TUNNEL		
LOCATION	H(W)	J(E)
CLOSURE WALL	–	4'-0"
1–2	3'-0"	8'-0"
2–3	3'-0"	3'-0"
3–4	4'-0"	4'-0"
4–5	4'-0"	3'-0"
5–6	5'-0"	5'-0"
6–7	4'-0"	7'-0"
7–8	6'-0"	10'-0"
8–9	9'-0"	9'-0"
9–10	4'-0"	4'-0"
10–STA	7'-0"	*

*See sheet 43/270 for removal detail at this location.

REMOVAL LIMITS WEST 25TH STREET TUNNEL		
LOCATION	H(S)	J(N)
CLOSURE WALL	–	5'-0"
11–12	6'-0"	4'-0"
12–13	4'-0"	4'-0"
13–14	5'-0"	5'-0"
14–15	5'-0"	5'-0"
15–16	4'-0"	5'-0"
16–17	8'-0"	4'-0"
17–STA	8'-0"	6'-0"

COUNTY BRIDGE NO. 84

HOWARD NEEDLES TAMMEN & BERGENDOFF
ARCHITECTS ENGINEERS PLANNERS
HNTB

REMOVAL – DETROIT AVENUE AND WEST 25TH STREET TUNNELS
BR. NO. CUY – 6 – 1499
REHABILITATION OF
VETERANS MEMORIAL BRIDGE
(U.S. 6, 20, 42 & S.R. 3 OVER CUYAHOGA RIVER)

CLEVELAND CUYAHOGA COUNTY OHIO

DRAWN W.J.V.	TRACED G.C.A.	CHECKED C.K.B.	REVIEWED C.A.B.	REVISED
DATE 5/14/90	DATE 5/24/90	DATE 7/14/90	DATE 3/31/94	SHEET 42/270

\11646\REMT.DWG

FHWA REGION	STATE	PROJECT	
5	OHIO		

175/412

CUYAHOGA COUNTY
CUY – 6 – 14.99

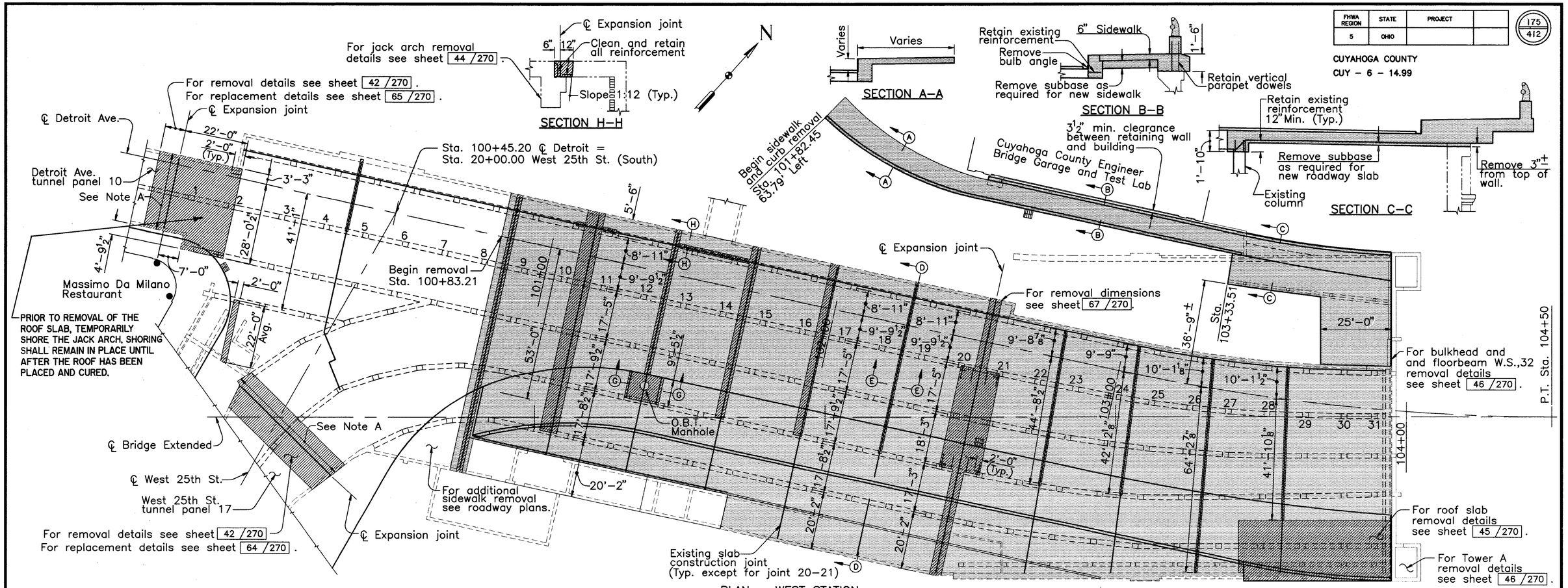

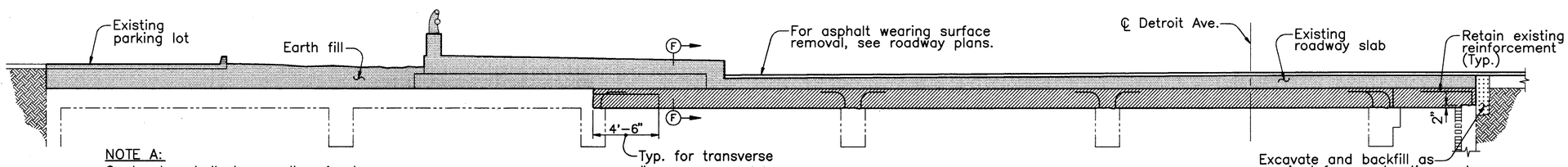

NOTE A:
Contractor shall shore walls prior to removal of roof slab. The shoring shall remain in place until the new roof slab has been placed and cured.

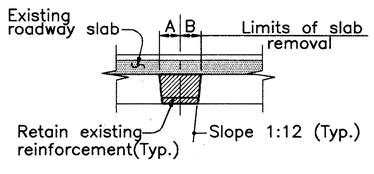

SECTION E–E
(Typ. at construction joints)
(Looking north)

JOINT	A	B
4–5	0'–6"	0'–6"
8–9	1'–0"	1'–0"
10–11	4'–0"	2'–0"
12–13	1'–0"	1'–0"
14–15	2'–0"	1'–0"
16–17	2'–6"	0'–6"
18–19	0'–6"	0'–6"
22–23	0'–6"	0'–6"
24–25	0'–6"	0'–6"
26–27	0'–6"	0'–6"
28–29	0'–6"	0'–6"

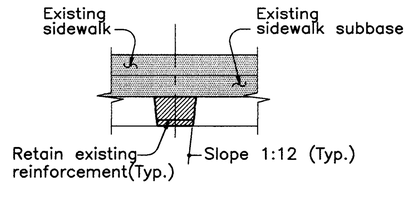

SECTION F–F
(Typ. at construction joints)

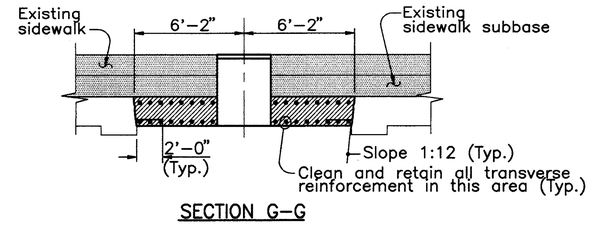

SECTION G–G

NOTES:
ALL STATIONS ARE GIVEN ALONG ℄ DETROIT AVE.
PAVEMENT REMOVAL, UTILITIES AND UTILITY POLES NOT SHOWN. SEE ROADWAY PLANS.
– DENOTES PORTIONS OF EXISTING ROOF SLAB SLAB TO BE REMOVED. (INCLUDED WITH ITEM 511 FOR PAYMENT)
– DENOTES PORTIONS OF EXISTING ROADWAY SLAB, SIDEWALK, SUBBASE, RAILING, PARKING LOT, CURB AND EARTH FILL TO BE REMOVED. (INCLUDED WITH ITEM 202 FOR PAYMENT)
RETAIN ALL EXISTING REINFORCEMENT EXTENDING FROM EXISTING STRUCTURE INTO PORTIONS OF REBUILT STRUCTURE, TO LIMITS SHOWN. ALL REINFORCEMENT EXPOSED WITHIN LIMITS OF JACK ARCHES IS TO REMAIN EXCEPT AS NOTED AT JACK ARCH REMOVAL LOCATIONS, AS NOTED ON SHEET 44/270.
FOR REPLACEMENT DETAILS SEE SHEETS 67/270 THRU 72/270.
COUNTY BRIDGE NO. 84

HOWARD NEEDLES TAMMEN & BERGENDOFF
ARCHITECTS ENGINEERS PLANNERS
HNTB

REMOVAL DETAILS
WEST SIDE STATION
BR. NO. CUY – 6 – 1499
REHABILITATION OF
VETERANS MEMORIAL BRIDGE
(U.S. 6, 20, 42 & S.R. 3 OVER CUYAHOGA RIVER)
CLEVELAND CUYAHOGA COUNTY OHIO

DRAWN B.E.B.	TRACED B.E.B.	CHECKED W.D.D.	REVIEWED C.A.B.	REVISED
DATE 1/28/94	DATE 1/28/94	DATE 3/25/94	DATE 3/31/94	SHEET 43/270

\11646\WSTA1.DWG

FHWA REGION	STATE	PROJECT	
5	OHIO		

176 / 412

CUYAHOGA COUNTY
CUY – 6 – 14.99

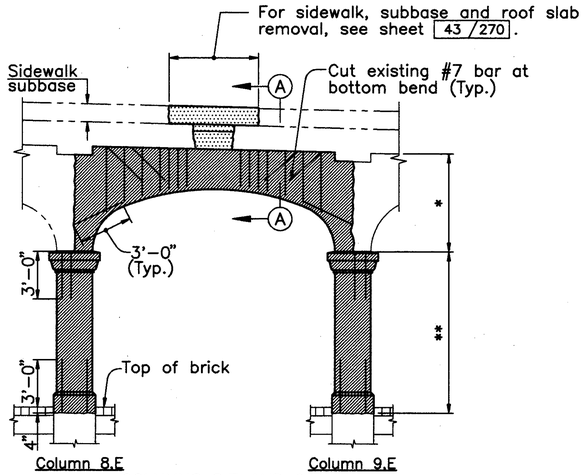

COLUMNS 8.E AND 9.E AND JACK ARCH 8–9.E REMOVAL DETAIL
(Sidewalk not shown)

* – Removal included with jack arch concrete for payment.
** – Removal included with column concrete for payment.

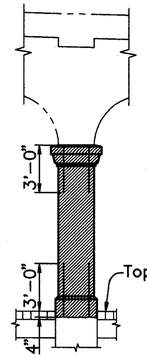

COLUMN 10.D REMOVAL DETAIL

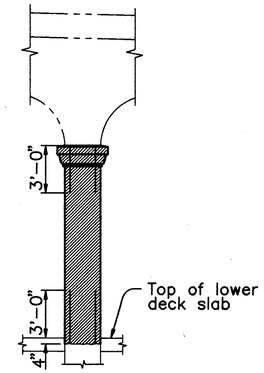

COLUMNS 29.D AND 30.D REMOVAL DETAIL

Note A:
Excavate and backfill as required to complete roof slab replacement and waterproofing. Payment shall be included with roof slab concrete.

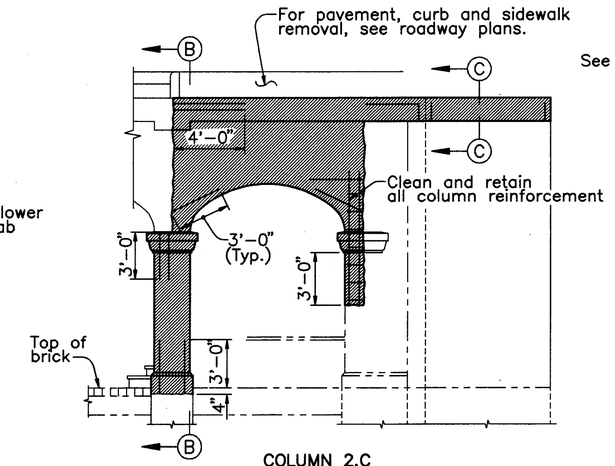

COLUMN 2.C AND JACK ARCH 1–2.C REMOVAL DETAIL
(Looking south)

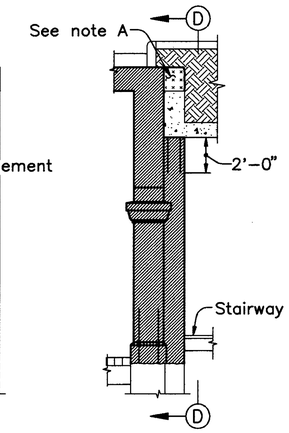

SECTION B–B

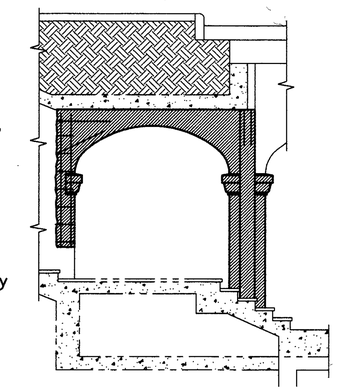

SECTION D–D

Note:
Existing glass closure wall for stairway into restaurant is not shown. The wall and doors shall be removed and reerected as required to complete the column and jack arch replacement. (Include with Item 202 for payment.)

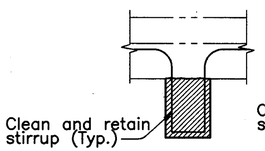

SECTION A–A

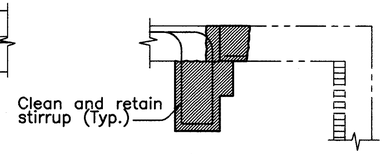

SECTION E–E

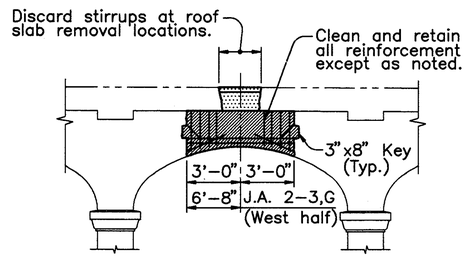

PARTIAL JACK ARCH REMOVAL DETAIL
(Roadway pavement not shown)
(Typical construction joint shown, expansion joint 20–21 similar)

LIST OF JACK ARCH REPLACEMENTS:
2–3,G; 8–9,B; 8–9,D; 10–11,B; 10–11,C; 10–11,D; 12–13,B; 12–13,C; 14–15,B; 14–15,C; 18–19,A; 20–21,A; 20–21,B; 20–21,C; 20–21,D; 20–21,E

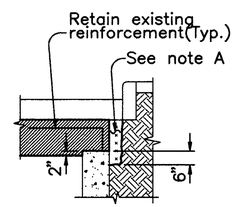

SECTION C–C

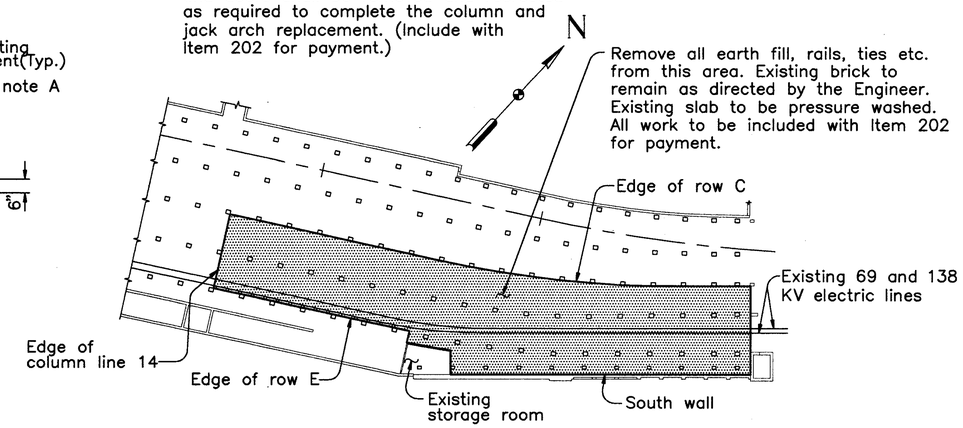

LOWER DECK FILL REMOVAL PLAN

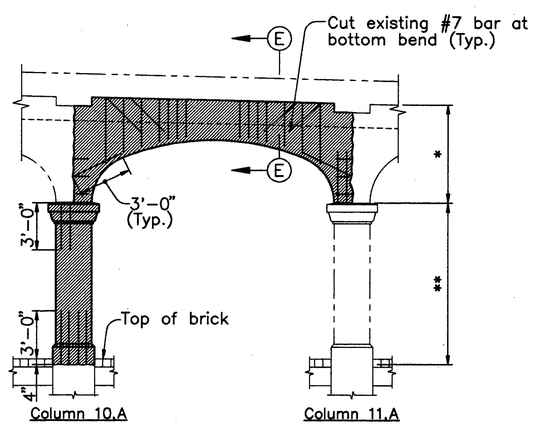

COLUMN 10.A AND JACK ARCH 10–11.A REMOVAL DETAIL
(Roadway pavement not shown)

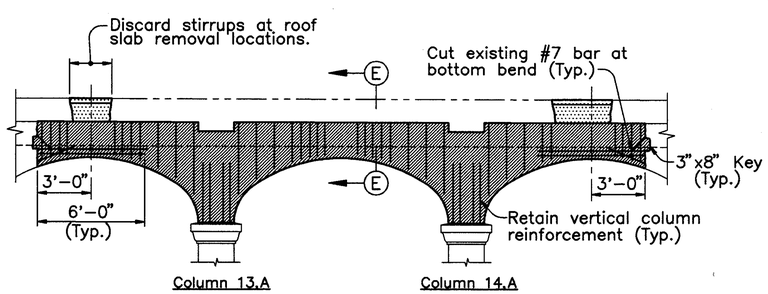

JACK ARCHES 12–13.A; 13–14.A AND 14–15.A REMOVAL DETAIL
(Roadway pavement not shown)

NOTES:

▨ – DENOTES PORTIONS OF EXISTING STRUCTURE TO BE REMOVED, EXCLUDING AREAS TO BE REMOVED BY PATCHING.

RETAIN ALL EXISTING REINFORCEMENT EXTENDING FROM EXISTING STRUCTURE INTO PORTIONS OF REBUILT STRUCTURE.

ALL EXISTING REINFORCEMENT IS NOT SHOWN.

FOR REPLACEMENT DETAILS SEE SHEETS 66 /270 AND 67 /270.

AT LOCATION WHERE THE SLAB REMAINS ABOVE THE JACK ARCH REMOVAL, THE SLAB SHALL BE TEMPORARILY SHORED PRIOR TO REMOVAL OF THE JACK ARCH AND SHALL REMAIN IN PLACE UNTIL THE JACK ARCH CONCRETE HAS BEEN PLACED AND CURED.

COUNTY BRIDGE NO. 84

HOWARD NEEDLES TAMMEN & BERGENDOFF
ARCHITECTS ENGINEERS PLANNERS
HNTB

REMOVAL DETAILS
WEST SIDE STATION
BR. NO. CUY – 6 – 1499
REHABILITATION OF
VETERANS MEMORIAL BRIDGE
(U.S. 6, 20, 42 & S.R. 3 OVER CUYAHOGA RIVER)
CLEVELAND CUYAHOGA COUNTY OHIO

DRAWN B.E.B.	TRACED B.E.B.	CHECKED W.D.D.	REVIEWED C.A.B.	REVISED
DATE 1/28/94	DATE 1/28/94	DATE 3/25/94	DATE 3/31/94	SHEET 44 /270

\11646\WSTA2.DWG

FHWA REGION	STATE	PROJECT	
5	OHIO		

177/412

CUYAHOGA COUNTY
CUY – 6 – 14.99

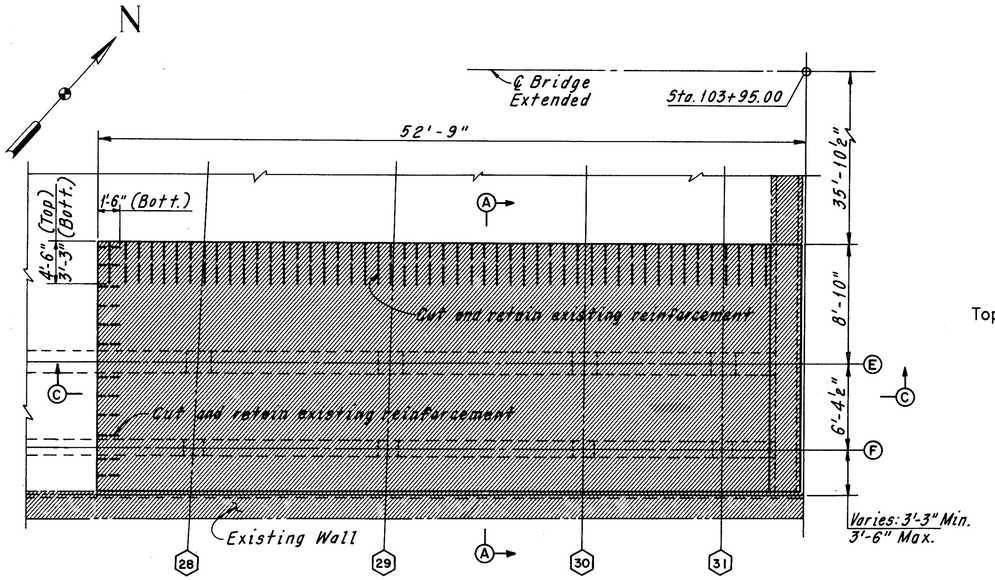

UPPER DECK PLAN
(Sidewalk not shown)

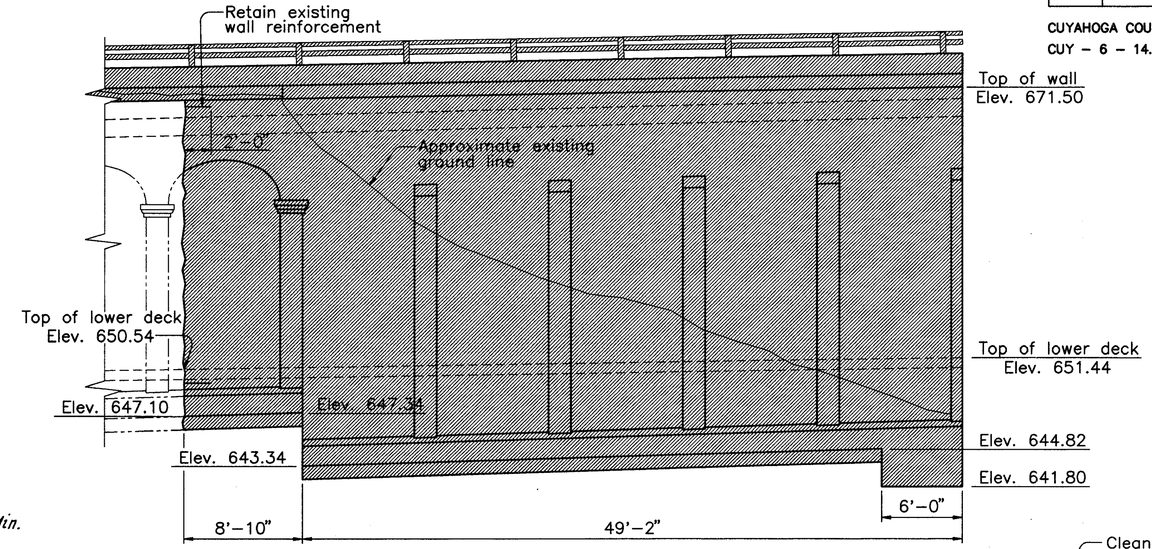

SOUTH WALL ELEVATION

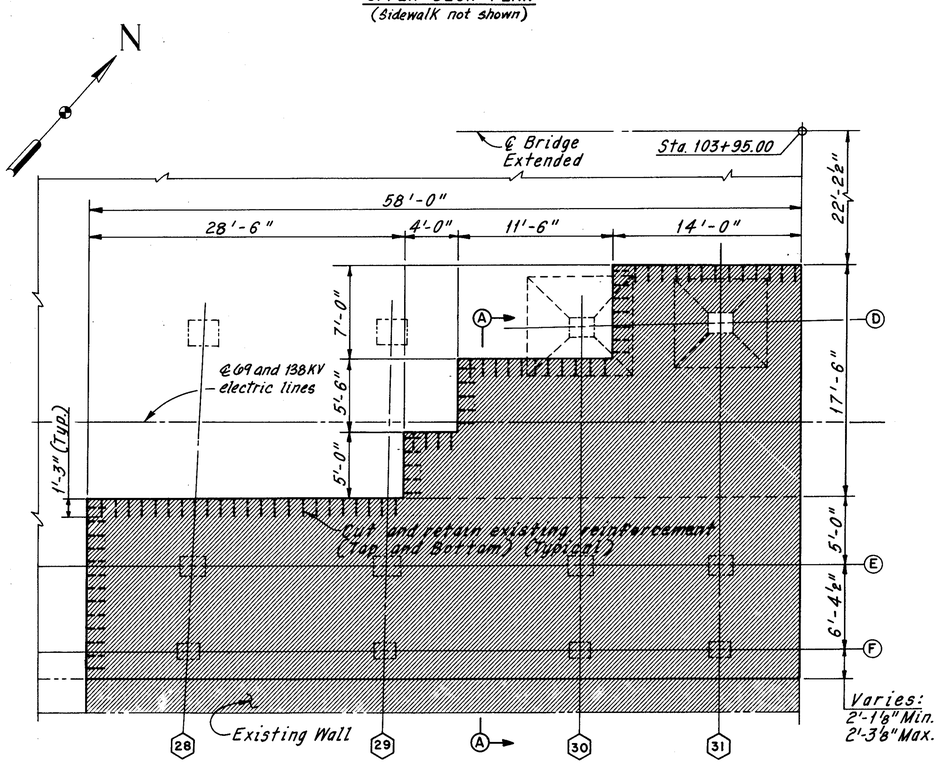

LOWER DECK PLAN

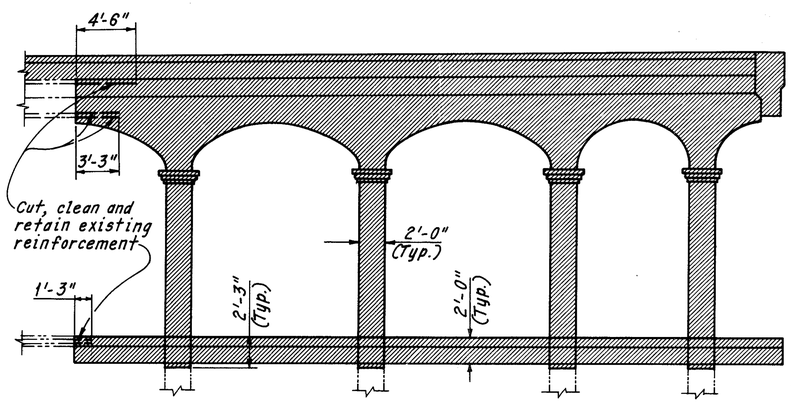

SECTION C-C

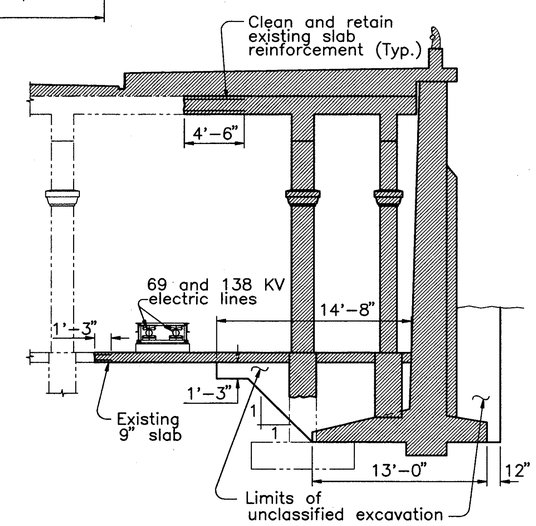

SECTION A–A

(EXISTING TEMPORARY STEEL SUPPORTS NOT SHOWN.)

NOTES:

▨ – DENOTES PORTIONS OF EXISTING STRUCTURE TO BE REMOVED.

RETAIN ALL EXISTING REINFORCEMENT EXTENDING FROM EXISTING STRUCTURE INTO PORTIONS OF REBUILT STRUCTURE.

ALL EXISTING REINFORCEMENT IS NOT SHOWN.

FOR REPLACEMENT DETAILS SEE SHEETS 68/270, 69/270 AND 70/270.

PRIOR TO REMOVAL OF THE SOUTH WALL, THE NORTH WALL SHALL BE TEMPORARILY SHORED UNTIL THE SOUTH WALL CONCRETE HAS BEEN PLACED AND CURED. THE SHORING SHALL BE PLACED BETWEEN: STA. 103+35 AND STA. 103+95.

COUNTY BRIDGE NO. 84

HOWARD NEEDLES TAMMEN & BERGENDOFF
ARCHITECTS ENGINEERS PLANNERS
HNTB

REMOVAL DETAILS
WEST SIDE STATION
BR. NO. CUY – 6 – 1499
REHABILITATION OF
VETERANS MEMORIAL BRIDGE
(U.S. 6, 20, 42 & S.R. 3 OVER CUYAHOGA RIVER)

CLEVELAND CUYAHOGA COUNTY OHIO

DRAWN C.K.B.	TRACED C.E.P.	CHECKED W.J.V.	REVIEWED C.A.B.	REVISED
DATE 7/10/90	DATE 7/17/90	DATE 2/7/91	DATE 3/31/94	SHEET 45/270

\11646\WSTA3.DWG

FHWA REGION	STATE	PROJECT	
5	OHIO		

178
412

CUYAHOGA COUNTY
CUY – 6 – 14.99

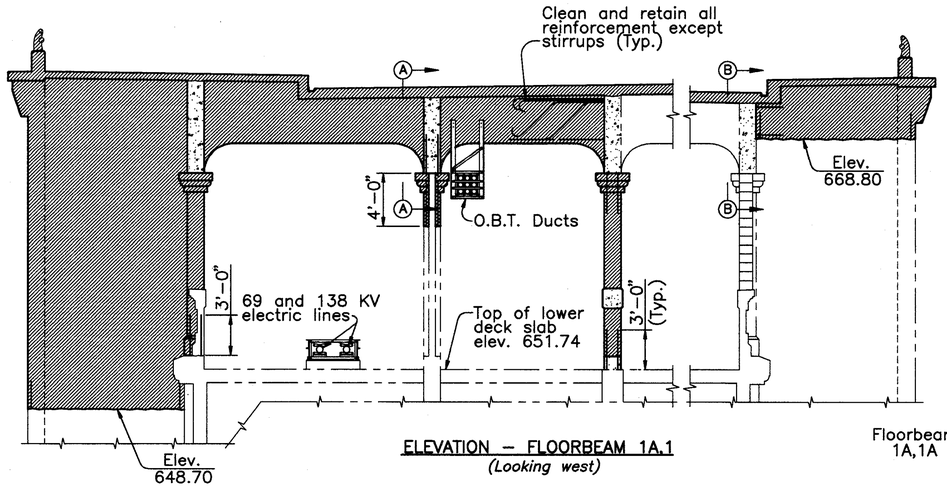

ELEVATION – FLOORBEAM 1A.1
(Looking west)

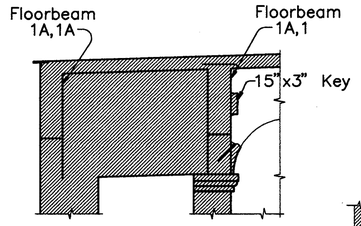

SECTION A–A
(South exterior row similar)

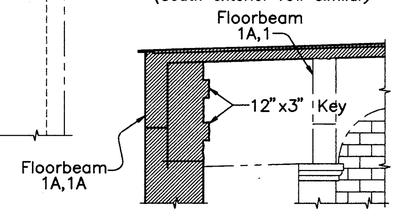

SECTION B–B
(North central row similar)

Note:
Bulkhead and wall concrete removal and replacement to be included with Class C, Piers and Abutments for payment (Typ.)

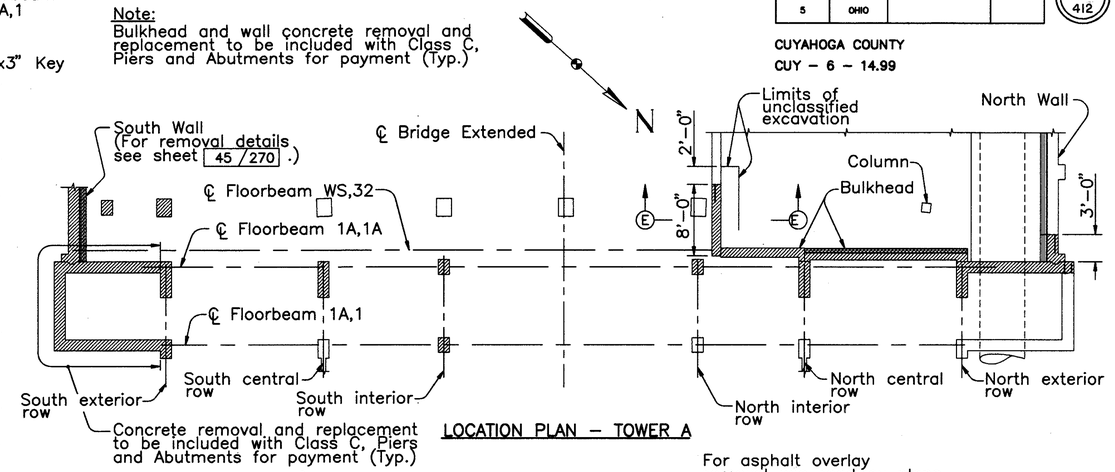

LOCATION PLAN – TOWER A

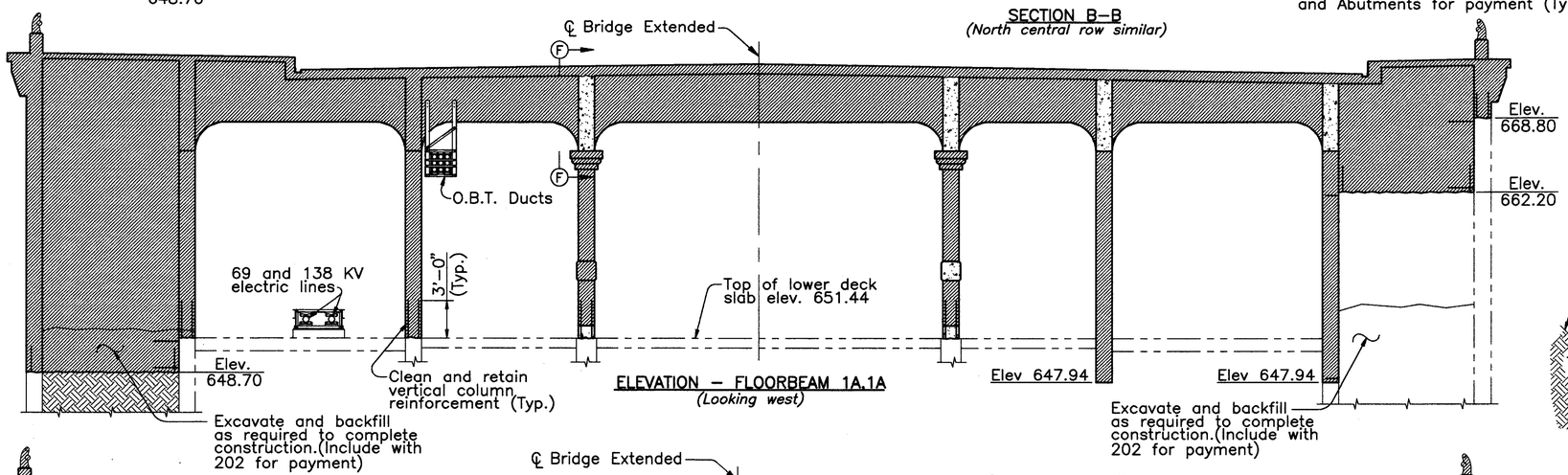

ELEVATION – FLOORBEAM 1A.1A
(Looking west)

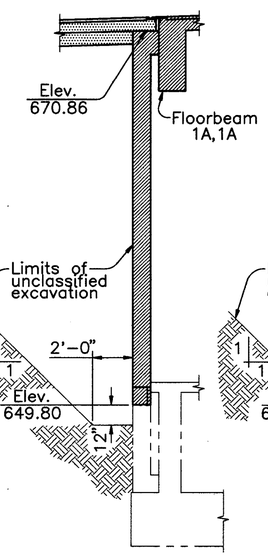

SECTION C–C

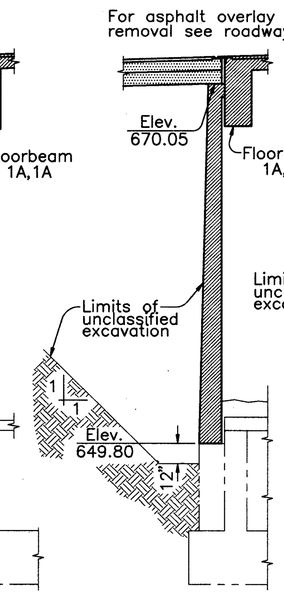

SECTION D–D

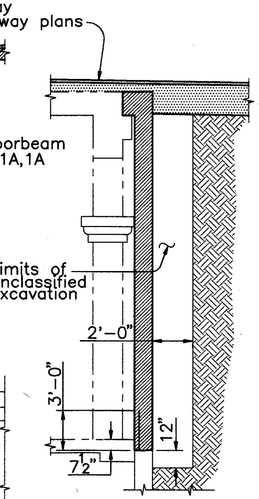

SECTION E–E

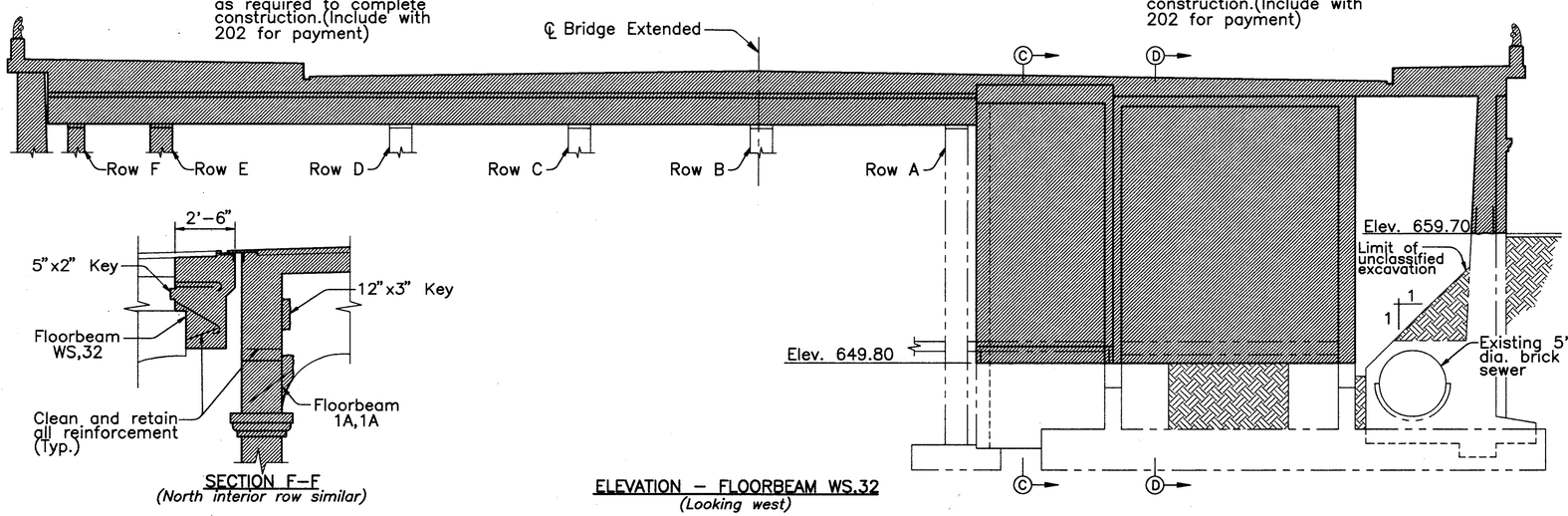

ELEVATION – FLOORBEAM WS.32
(Looking west)

SECTION F–F
(North interior row similar)

NOTES:

– DENOTES PORTIONS OF EXISTING PAVEMENT TO BE REMOVED. (INCLUDED WITH 202 FOR PAYMENT)

– DENOTES PORTIONS OF EXISTING STRUCTURE TO BE REMOVED, EXCLUDING AREAS TO BE REMOVED BY PATCHING.

BULKHEADS ARE SUPPORTED LATERALLY BY COLUMNS AND FLOORBEAM 1A,1A. FLOORBEAM 1A,1A SHALL NOT BE REMOVED UNTIL BULKHEADS HAVE BEEN REMOVED.

RETAIN ALL EXISTING REINFORCEMENT EXTENDING FROM EXISTING STRUCTURE INTO PORTIONS OF REBUILT STRUCTURE. EXISTING BARS SHALL BE CUT AT A DISTANCE OF 2'–0" FROM THE REMOVAL LIMIT UNLESS OTHERWISE SPECIFIED.

ALL EXISTING REINFORCEMENT IS NOT SHOWN.

FOR REPLACEMENT DETAILS SEE SHEETS 68/270, 73/270 AND 74/270.

FLOORBEAM REMOVAL ADJACENT TO JACK ARCHES WHICH REMAIN IS SIMILAR TO VIEW A–A AND SECTION B–B AS SHOWN ON SHEET 50/270.

COUNTY BRIDGE NO. 84

HOWARD NEEDLES TAMMEN & BERGENDOFF
ARCHITECTS ENGINEERS PLANNERS
HNTB

REMOVAL DETAILS – TOWER A
BR. NO. CUY – 6 – 1499
REHABILITATION OF
VETERANS MEMORIAL BRIDGE
(U.S. 6, 20, 42 & S.R. 3 OVER CUYAHOGA RIVER)
CLEVELAND CUYAHOGA COUNTY OHIO

DRAWN R.S.Y.	TRACED R.S.Y.	CHECKED B.E.B.	REVIEWED C.A.B.	REVISED
DATE 2/8/94	DATE 2/8/94	DATE 2/15/94	DATE 3/31/94	SHEET 46/270

\11646\REMTA

FHWA REGION	STATE	PROJECT	
5	OHIO		

179
412

CUYAHOGA COUNTY
CUY – 6 – 14.99

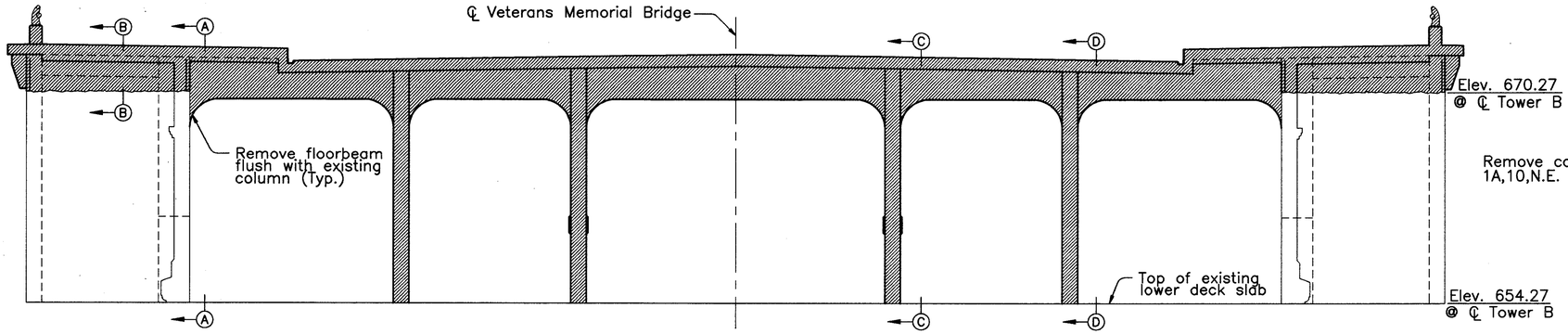

ELEVATION – TOWER B
(Looking east, floorbeam 1A,10 not shown)

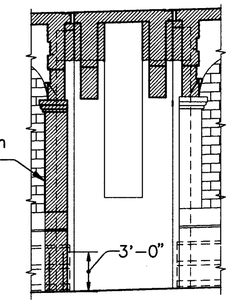

SECTION A–A
(South side similar, except as noted)

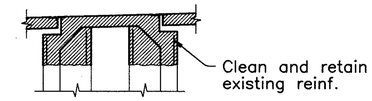

SECTION B–B

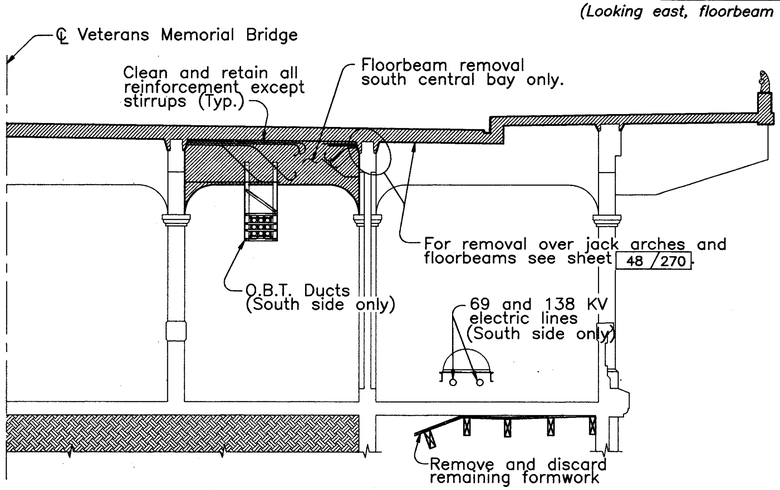

TYPICAL SECTION – SPAN 1A
(South side shown, north side similar)

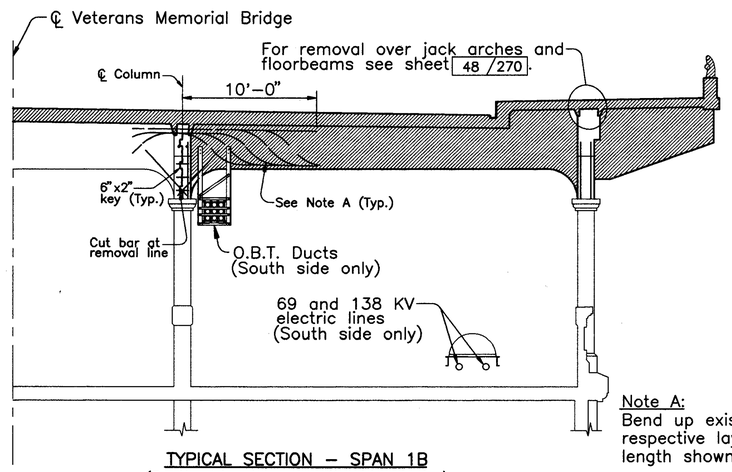

TYPICAL SECTION – SPAN 1B
(South side shown, north side similar)

Floorbeams are removed at the following locations:
North bay: 1B,2 and 1B,4
South bay: 1B,2; 1B,4; 1B,5; 1B,6; 1B,7; 1B,8; 1B,9; 1B,11

Note A:
Bend up existing reinforcement into respective layers and cut off to the length shown from ℄ column.

For treatment at jackarches refer to floorbeam removal details, sheet 50 /270.

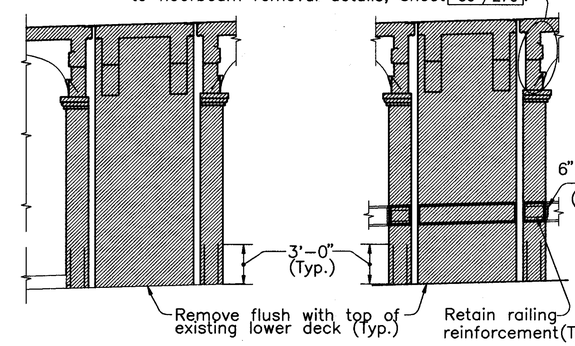

SECTION C–C

SECTION D–D

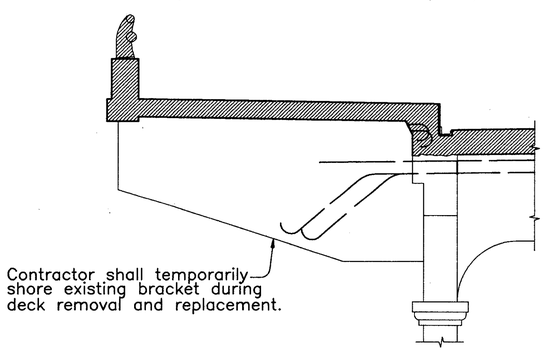

DETAIL AT NORTH SIDEWALK SPAN 1A
FLOOR BEAM 2

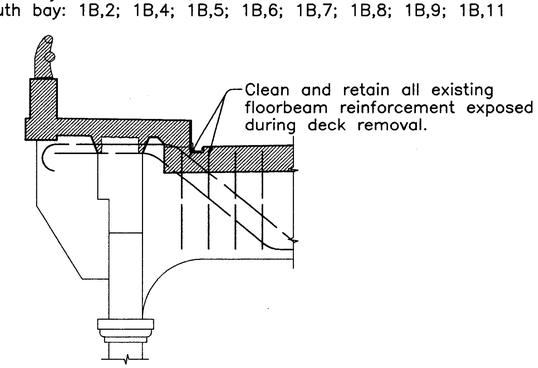

FLOORBEAM CANTILEVER BRACKET REINFORCEMENT
SPAN 1B

NOTES:

▨ – DENOTES PORTIONS OF EXISTING STRUCTURE TO BE REMOVED.

FOR REMOVAL DETAILS AT TOWER A SEE SHEET 46 /270.

FOR COLUMN REMOVAL DETAILS SEE SHEET 52 /270.

FOR JACK ARCH REMOVAL DETAILS SEE SHEET 51 /270.

FLOORBEAM REMOVAL ADJACENT TO COLUMNS AND JACK ARCHES TO BE SIMILAR TO SECTION B–B, SHEET 50 /270.

CLEAN AND RETAIN ALL REINFORCEMENT EXTENDING FROM THE REMOVAL LIMITS TO SERVE AS DOWELS INTO THE NEW CONSTRUCTION.

EXISTING DECK CONSISTS OF A 9" REINFORCED CONCRETE SLAB AND A 2–1/2" ASPHALT OVERLAY.

COUNTY BRIDGE NO. 84

HOWARD NEEDLES TAMMEN & BERGENDOFF
ARCHITECTS ENGINEERS PLANNERS
HNTB

REMOVAL DETAILS
SPANS 1A AND 1B
BR. NO. CUY – 6 – 1499
REHABILITATION OF
VETERANS MEMORIAL BRIDGE
(U.S. 6, 20, 42 & S.R. 3 OVER CUYAHOGA RIVER)
CLEVELAND CUYAHOGA COUNTY OHIO

DRAWN B.E.B.	TRACED B.E.B.	CHECKED R.S.Y.	REVIEWED C.A.B.	REVISED
DATE 10/8/93	DATE 10/8/93	DATE 10/9/93	DATE 3/28/94	SHEET 47 /270

\11646\REM1A

FHWA REGION	STATE	PROJECT	
5	OHIO		

180 / 412

CUYAHOGA COUNTY
CUY – 6 – 14.99

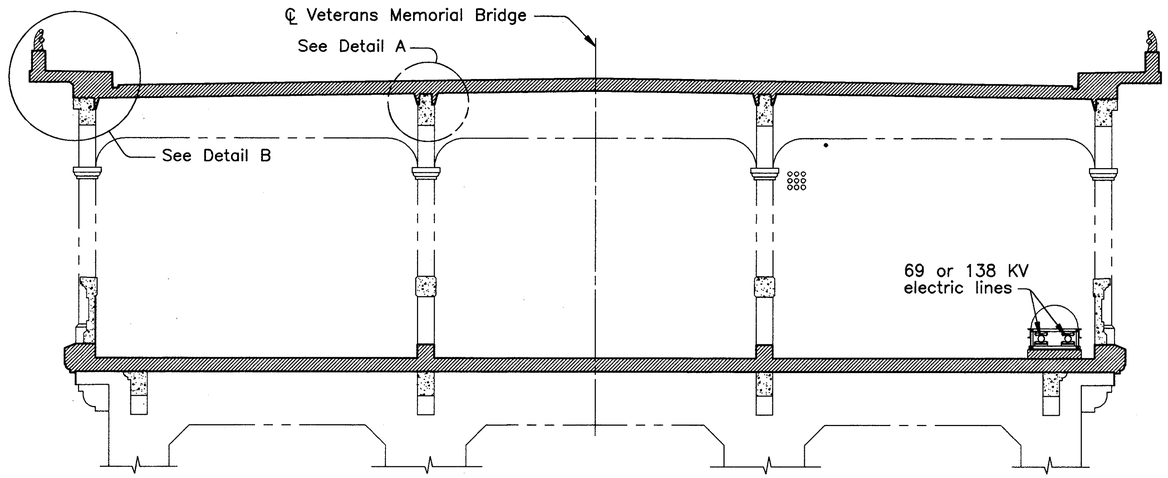

TYPICAL SECTION BETWEEN FLOORBEAMS

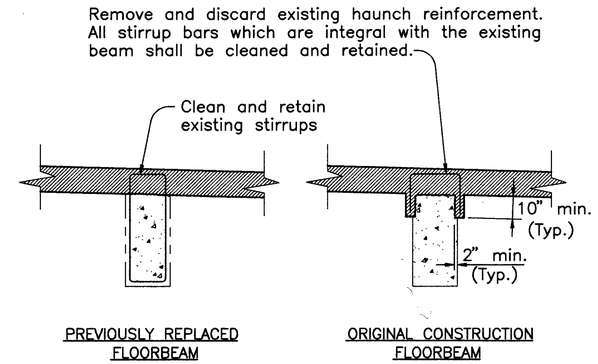

SECTION D–D

REMOVAL OVER UPPER DECK FLOORBEAM

(Typ.– Except for replaced members)

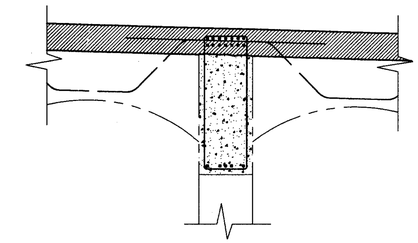

SECTION C–C

REMOVAL OVER LOWER DECK FLOORBEAM

(Typ.– Except for replaced members)
(Interior floorbeam shown, end floorbeam similar)

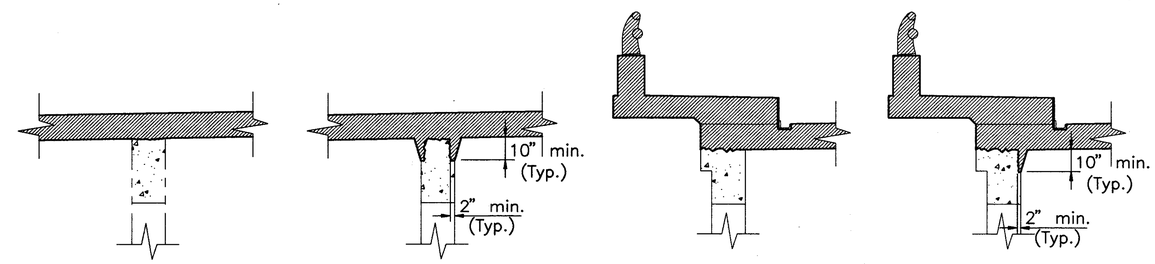

DETAIL A

DETAIL B

REMOVAL OVER UPPER DECK JACK ARCHES

(Typ.– Except for replaced members)

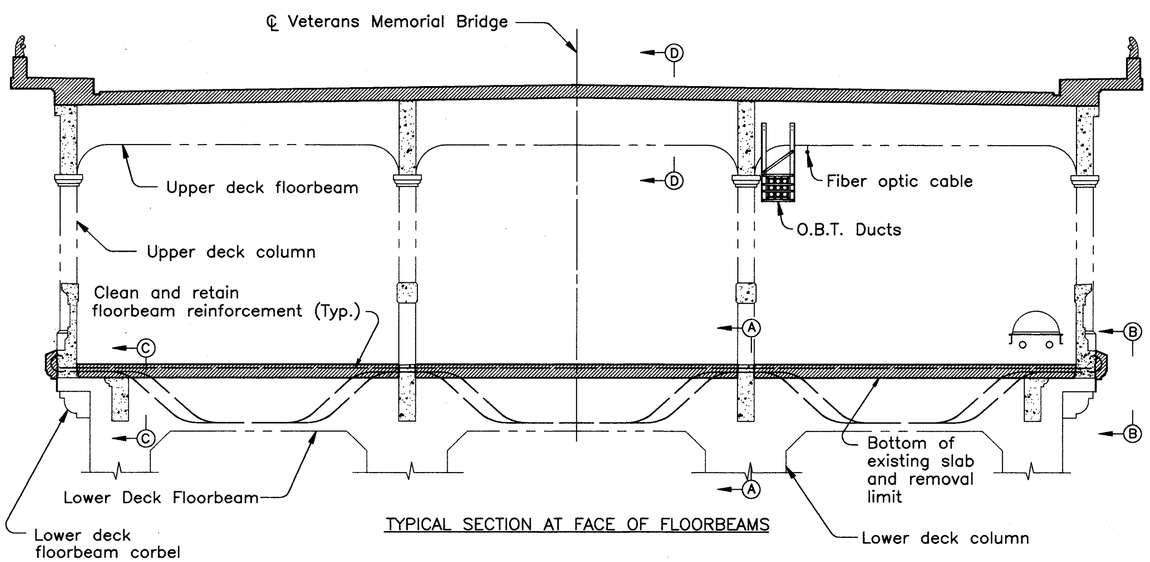

TYPICAL SECTION AT FACE OF FLOORBEAMS

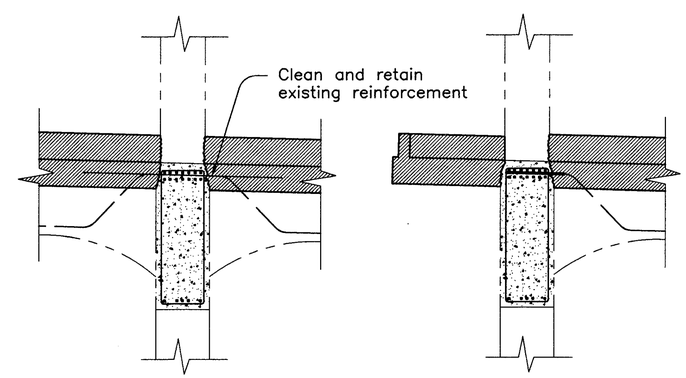

SECTION A–A
(Interior floorbeam)

SECTION A–A
(End floorbeam)

REMOVAL OVER LOWER DECK JACK ARCHES

(Typ.– Except for replaced members)

NOTES:

– DENOTES PORTIONS OF EXISTING STRUCTURE TO BE REMOVED.

FOR VIEW B–B SEE SHEET 49 / 270.

REFER TO SHEET 41/270 FOR ADDITIONAL REMOVAL REQUIREMENTS.

COUNTY BRIDGE NO. 84

HOWARD NEEDLES TAMMEN & BERGENDOFF
ARCHITECTS ENGINEERS PLANNERS
HNTB

DECK REMOVAL DETAILS
SPANS 1 THRU 3 AND 5 THRU 11
BR. NO. CUY – 6 – 1499
REHABILITATION OF
VETERANS MEMORIAL BRIDGE
(U.S. 6, 20, 42 & S.R. 3 OVER CUYAHOGA RIVER)

CLEVELAND CUYAHOGA COUNTY OHIO

DRAWN B.E.B.	TRACED B.E.B.	CHECKED R.S.Y.	REVIEWED C.A.B.	REVISED
DATE 2/12/93	DATE 2/12/93	DATE 2/15/93	DATE 3/31/94	SHEET 48 / 270

\11646\DECKREM.DWG

FHWA REGION	STATE	PROJECT	
5	OHIO		

181
412

CUYAHOGA COUNTY
CUY – 6 – 14.99

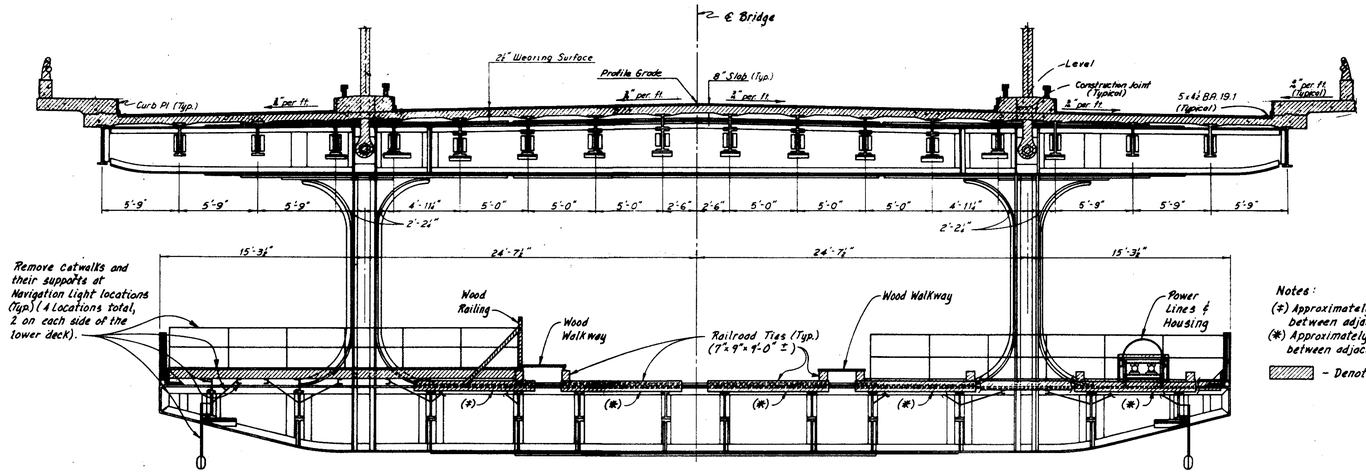

Notes:
(±) Approximately 4 railroad ties between adjacent floorbeams.
(*) Approximately 18 railroad ties between adjacent floorbeams.
– Denotes Removal

TYPICAL SECTION BETWEEN FLOORBEAMS – SPAN 4

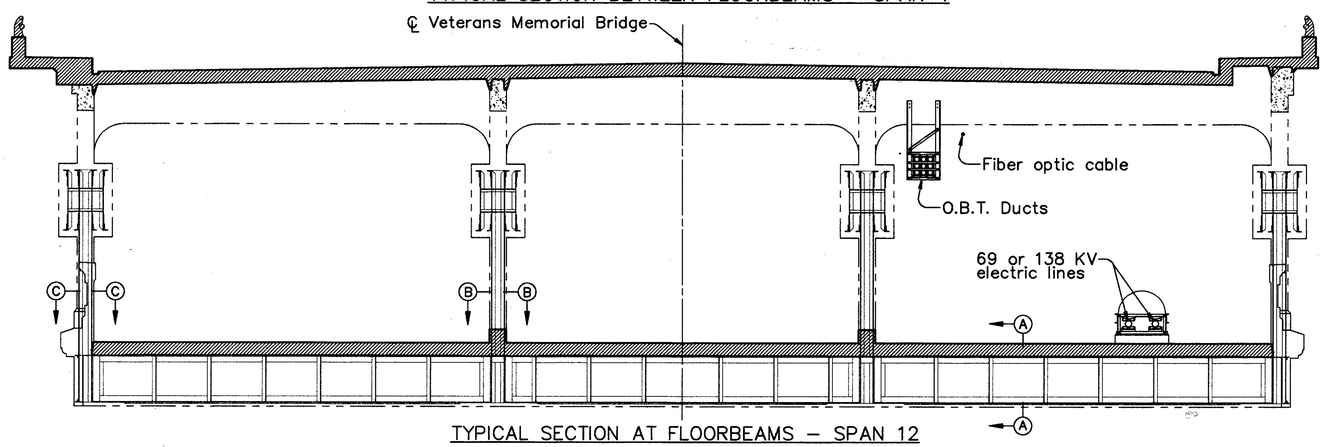

TYPICAL SECTION AT FLOORBEAMS – SPAN 12

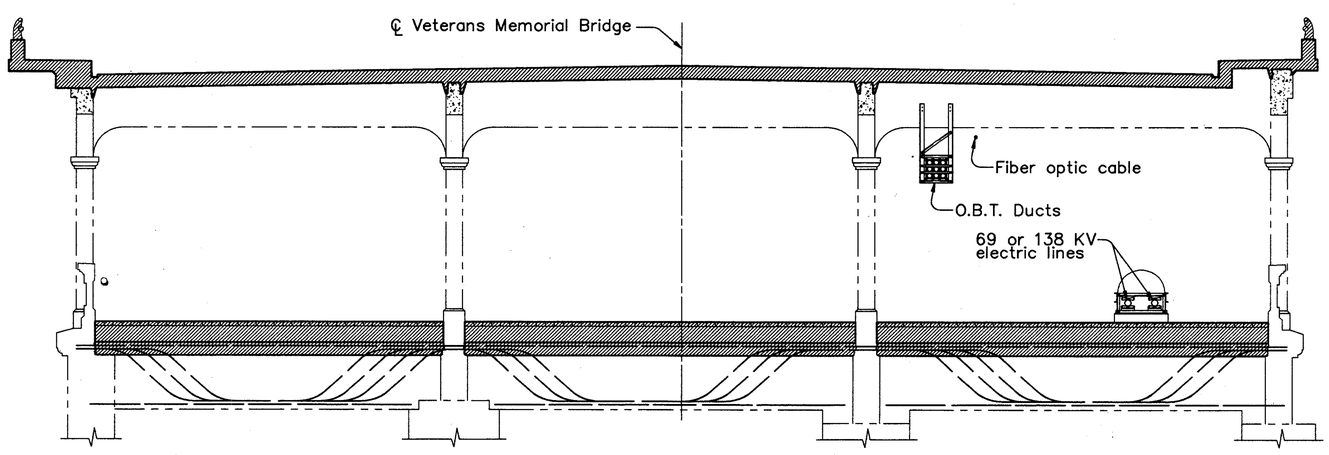

TYPICAL SECTION AT FLOORBEAMS – SPAN 13

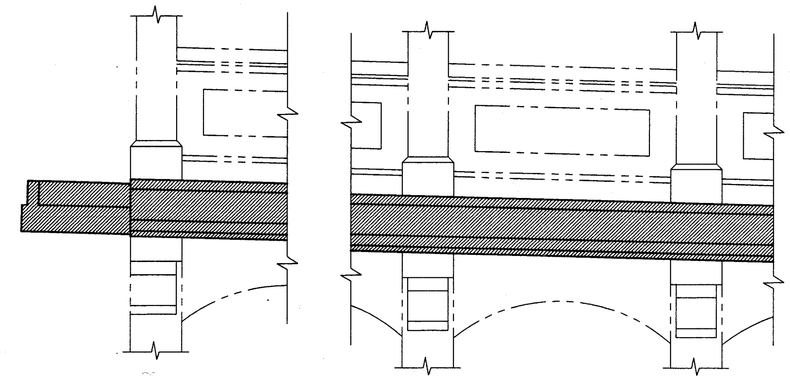

VIEW B–B
(End floorbeam)

VIEW B–B
(Interior floorbeam)

FASCIA REMOVAL DETAIL – SPANS 1 THRU 3 AND 5 THRU 11
(Typical, except for replaced members)

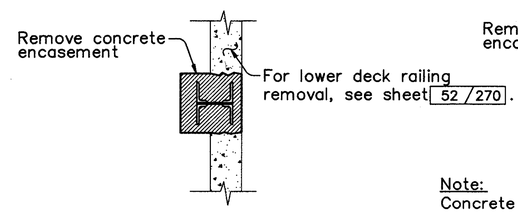

SECTION C–C

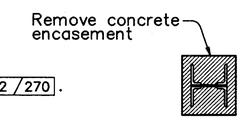

SECTION B–B

Note:
Concrete encasement shall be removed from the intrados of the arch rib to the top of the lower deck curb, at the following exterior columns:
12,5,N.E.;12,6,N.E.;12,7,N.E.;12,8,N.E.;12,9,N.E.;12,10.N.E.
12,4,S.E.;12,5,S.E.;12,6,S.E.;12,7,S.E.;12,8,S.E.;12,9,S.E.

Note:
Concrete encasement shall be removed from the intrados of the arch rib to the top of the lower deck curb, at the following interior columns:
12,5,N.I.;12,6,N.I.;12,7,N.I.;12,8,N.I.;12,9,N.I.;12,10.N.I.
12,4,S.I.;12,5,S.I.;12,6,S.I.;12,7,S.I.;12,8,S.I.;12,9,S.I.

NOTES:
– DENOTES PORTIONS OF EXISTING STRUCTURE TO BE REMOVED.

FOR LOCATION OF VIEW B–B
SEE SHEET 48 /270.

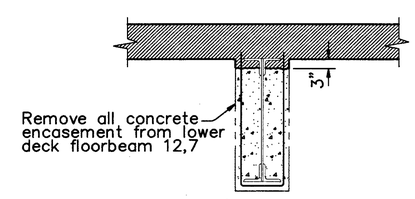

SECTION A–A

COUNTY BRIDGE NO. 84

HOWARD NEEDLES TAMMEN & BERGENDOFF
ARCHITECTS ENGINEERS PLANNERS
HNTB

DECK REMOVAL DETAILS
SPANS 4, 12 and 13
BR. NO. CUY – 6 – 1499
REHABILITATION OF
VETERANS MEMORIAL BRIDGE
(U.S. 6, 20, 42 & S.R. 3 OVER CUYAHOGA RIVER)

CLEVELAND CUYAHOGA COUNTY OHIO

DRAWN C.K.B.	TRACED J.T.	CHECKED W.D.D.	REVIEWED C.A.B.	REVISED
DATE 5/4/92	DATE 6/1/92	DATE 6/1/92	DATE 3/29/94	SHEET 49 /270

\11646\remsp4.DWG

FHWA REGION	STATE	PROJECT	
5	OHIO		

182 / 412

CUYAHOGA COUNTY
CUY – 6 – 14.99

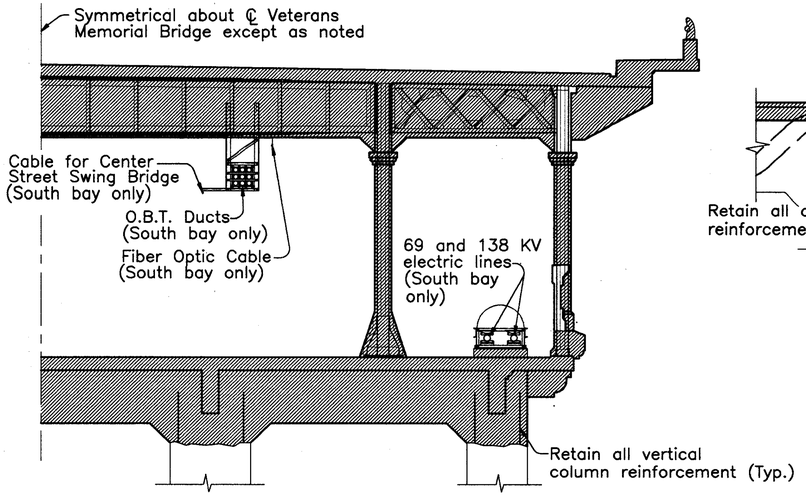

REMOVAL AT FLOORBEAMS 3,18 and 5,1
(West Elevation Floorbeam 3,18 shown, floorbeam 5,1 similar)

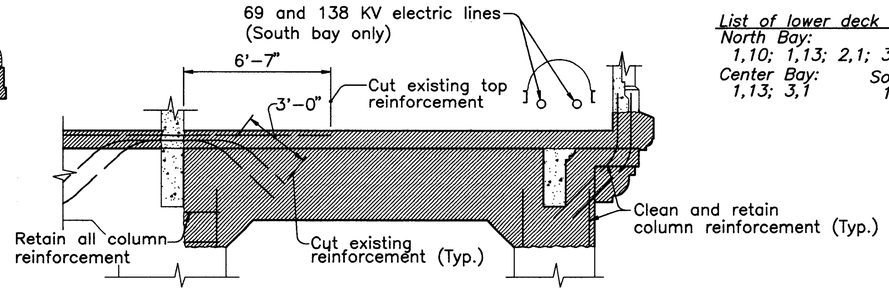

TYPICAL LOWER DECK FLOORBEAM REMOVAL
(South bay shown, center and north bays similar)

List of lower deck floorbeam replacements:
North Bay:
1,10; 1,13; 2,1; 3,1; 3,17; 5,2
Center Bay:
1,13; 3,1
South Bay:
1,1; 1,9; 2,1; 3,1

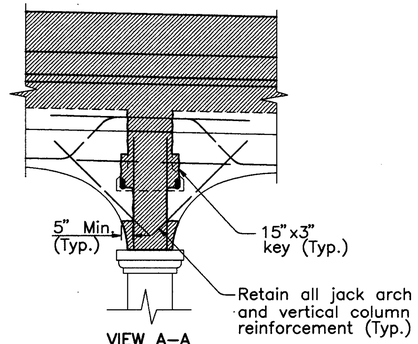

VIEW A–A
(Railing not shown)
(Interior jack arch similar)

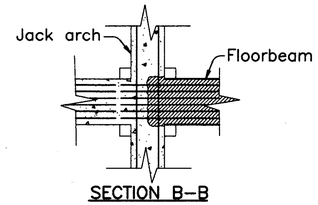

SECTION B–B

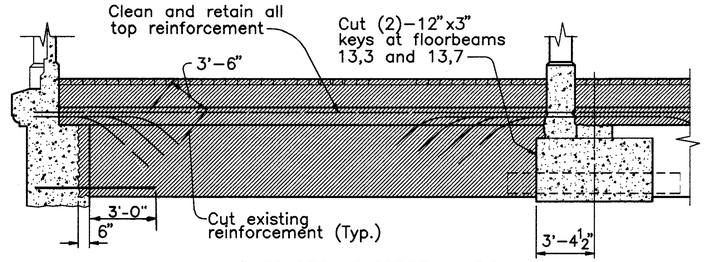

LOWER DECK FLOORBEAM 13.5
(Lookng East)
(Floorbeams 13,3; 13,4; 13,6; and 13,7 similar)

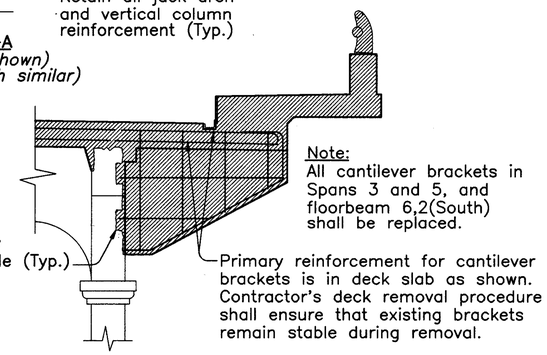

Note:
All cantilever brackets in Spans 3 and 5, and floorbeam 6,2(South) shall be replaced.

UPPER DECK FLOORBEAM CANTILEVER – SPANS 3 and 5

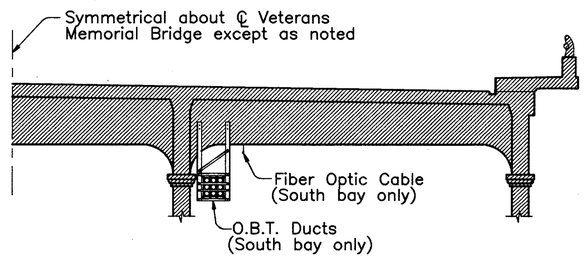

UPPER DECK FLOORBEAM REMOVAL ADJACENT TO PIERS AND ABUTMENTS
Floorbeam 1B,12 shown, similar for:
1,1; 1,13; 2,1; 2,16; 3,1; 5,15; 6,1; 6,15; 7,1; 7,15; 8,1; 8,15; 9,1; 9,13; 10,1; 10,12 11,1; 13,8; E.S.,1

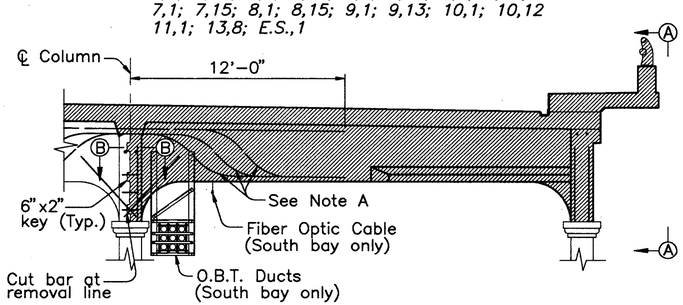

TYPICAL UPPER DECK FLOORBEAM REMOVAL
Floorbeam 1,2 south bay shown, similar for:
North Bay:
1,2; 1,9; 1,10; 1,11; 1,12; 8,13; 11,5; 11,6; 13,3; E.S.,2; E.S.,4; E.S.,5; E.S.,6
South Bay:
1,3; 1,4; 1,6; 1,7; 1,8; 1,9; 1,10; 1,11; 1,12; 2,2; 2,3; 2,4; 2,5; 2,11; 2,12; 2,14; 3,2; 3,3; 3,4; 3,5; 3,6; 3,7; 3,12; 5,2; 5,3; 5,13; 5,14; 6,2; 6,12; 6,13; 7,4; 7,5; 7,14; 8,3; 13,2; 13,3; 13,4; E.S.,2; E.S.,3; E.S.,4; E.S.,5; E.S.,6

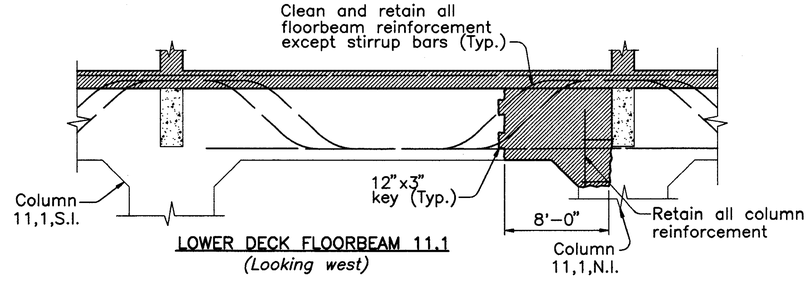

LOWER DECK FLOORBEAM 11.1
(Looking west)

Note A:
Bend up existing reinforcement into respective layers and cut off to the length shown from ℄ column.

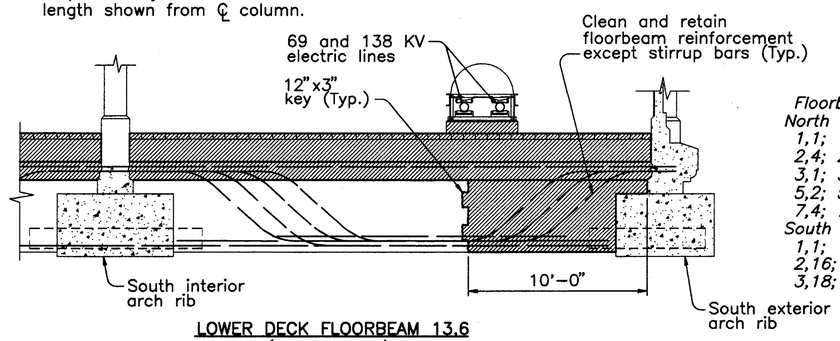

LOWER DECK FLOORBEAM 13.6
(Looking east)

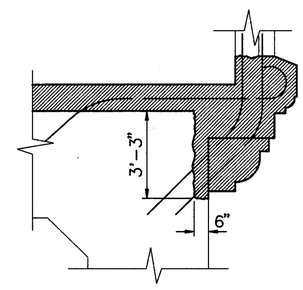

LOWER DECK FLOORBEAM CORBEL REMOVAL DETAIL
Floorbeam 1,2 south bay shown, similar for:
North Bay:
1,1; 1,2; 1,3; 1,10; 1,11; 1,12; 1,13; 2,1; 2,2; 2,3 2,4; 2,5; 2,6; 2,7; 2,8; 2,9; 2,10; 2,11; 2,12; 2,16; 3,1; 3,2; 3,3; 3,4; 3,8; 3,13; 3,14; 3,17; 3,18; 5,1; 5,2; 5,5; 5,6; 5,9; 5,10; 5,15; 6,1; 6,10; 6,11; 6,12; 7,4; 7,5; 7,8; 7,9; 8,1; 8,15; 10,12; 11,6
South Bay:
1,1; 1,4; 1,5; 1,6; 1,11; 1,13; 2,1; 2,2; 2,3; 2,14; 2,16; 3,1; 3,2; 3,4; 3,5; 3,6; 3,7; 3,8; 3,9; 3,10; 3,18; 5,1; 5,11; 6,15; 8,1; 8,6; 11,5; 11,6

NOTES:

▨ – DENOTES PORTIONS OF EXISTING STRUCTURE TO BE REMOVED.

FOR ADDITIONAL REMOVAL DETAILS OF SPANS 1A AND 1B SEE SHEET 47 / 270.

FOR ADDITIONAL DETAILS OF EAST STATION SEE SHEETS 61 / 270 AND 62 / 270.

CLEAN AND RETAIN ALL REINFORCEMENT EXTENDING FROM THE REMOVAL LIMITS AS SHOWN.

THE CONTRACTOR SHALL PROVIDE TEMPORARY SHORING FOR FLOORBEAM CANTILEVER BRACKETS AT FLOORBEAMS 6,2(NORTH); 6,3 AND 6,4.

COUNTY BRIDGE NO. 84

HOWARD NEEDLES TAMMEN & BERGENDOFF
ARCHITECTS ENGINEERS PLANNERS
HNTB

FLOORBEAM REMOVAL DETAILS
BR. NO. CUY – 6 – 1499
REHABILITATION OF
VETERANS MEMORIAL BRIDGE
(U.S. 6, 20, 42 & S.R. 3 OVER CUYAHOGA RIVER)
CLEVELAND CUYAHOGA COUNTY OHIO

DRAWN B.E.B.	TRACED B.E.B.	CHECKED W.D.D.	REVIEWED C.A.B.	REVISED
DATE 5/15/93	DATE 5/15/93	DATE 3/25/94	DATE 3/28/94	SHEET 50 / 270

\11646\REMFB.DWG

TABLE OF UPPER DECK JACK ARCH REPLACEMENTS

NORTH EXTERIOR
1A,8–10; 1B,1–2; 1B,5–6; 1B,11–12; 1,1–2; 1,9–10; 1,10–11; 1,11–12; 1,12–13; 2,1–2; 2,3–4; 2,14–15; 2,15–16; 3,1–2; 3,7–8; 3,16–17; 5,12–13; 5,13–14; 5,14–15; 6,1–2; 6,14–15; 7,1–2; 7,6–7; 7,8–9; 7,14–15; 8,1–2; 8,14–15; 9,1–2; 9,12–13; 10,1–2; 10,11–12; 11,1–2; 11,5–6; 12,11–12; 12,12–13,1; 13,7–8; E.S.,1–2; E.S.,4–5; E.S.,5–6; E.S.,6–7; E.S.,7–8;

NORTH CENTRAL
1A,8–10;

NORTH INTERIOR
1B,1–2; 1B,7–8, 1B,8–9; 1B,9–10; 1B,10–11; 1B,11–12; 1,1–2; 1,2–3; 1,5–6; 1,6–7; 1,7–8; 1,9–10; 1,12–13; 2,1–2; 2,5–6; 2,15–16; 3,1–2; 3,13–14; 3,14–15; 3,15–16; 5,2–3; 5,3–4; 5,4–5; 5,5–6; 5,7–8; 5,8–9; 5,11–12; 5,14–15; 6,1–2; 6,4–5; 6,5–6; 6,6–7; 6,8–9; 6,12–13; 6,13–14; 6,14–15; 7,1–2; 7,4–5; 7,6–7; 7,7–8; 7,8–9; 7,9–10; 7,10–11; 7,11–12; 7,12–13; 7,13–14; 7,14–15; 8,1–2; 8,6–7; 8,8–9; 8,14–15; 9,1–2; 9,4–5; 9,6–7; 9,7–8; 9,8–9; 9,9–10; 9,10–11; 9,11–12; 9,12–13; 10,1–2; 10,2–3; 10,6–7; 10,8–9; 10,9–10; 10,10–11; 10,11–12; 11,1–2; 11,2–3; 11,3–4; 11,4–5; 11,5–6; 11,6–7; 11,7–8; 12,1–2; 12,9–10; 12,10–11; 13,3–4; 13,4–5; 13,6–7; 13,7–8; E.S.,1–2; E.S.,6–7; E.S.,7–8; E.S.,8–9; E.S.,9–10; E.S.,10–11; E.S.,11–12; E.S.,13–14; E.S.,15–16; E.S.,17–18; E.S.,18–19; E.S.,19–20; E.S.,20–21;

SOUTH INTERIOR
1B,1–2; 1B,7–8; 1B,8–9; 1B,9–10; 1B,10–11; 1B,11–12; 1,1–2; 1,2–3; 1,3–4; 1,4–5; 1,5–6; 1,6–7; 1,7–8; 1,8–9; 1,9–10; 1,10–11; 1,11–12; 1,12–13; 2,1–2; 2,4–5; 2,5–6; 2,6–7; 2,9–10; 2,10–11; 2,12–13; 2,13–14; 2,14–15; 2,15–16; 3,1–2; 3,2–3; 3,3–4; 3,4–5; 3,5–6; 3,6–7; 3,7–8; 3,8–9; 3,9–10; 3,11–12; 3,13–14; 3,14–15; 3,15–16; 5,2–3; 5,3–4; 5,5–6; 5,11–12; 5,12–13; 5,13–14; 5,14–15; 6,1–2; 6,2–3; 6,3–4; 6,5–6; 6,8–9; 6,9–10; 6,11–12; 6,12–13; 6,14–15; 7,1–2; 7,2–3; 7,3–4; 7,4–5; 7,5–6; 7,6–7; 7,7–8; 7,8–9; 7,9–10; 7,11–12, 7,12–13; 7,13–14; 7,14–15; 8,1–2; 8,14–15; 9,1–2; 9,2–3; 9,3–4; 9,4–5; 9,8–9; 9,9–10; 9,10–11; 9,11–12; 9,12–13; 10,1–2; 10,2–3; 10,3–4; 10,4–5; 10,5–6; 10,6–7; 10,7–8; 10,8–9; 10,9–10; 10,10–11; 10,11–12; 11,1–2; 11,2–3; 11,3–4; 12,4–5; 12,11–12; 13,1–2; 13,2–3; 13,3–4; 13,5–6; 13,6–7; 13,7–8; E.S.,1–2; E.S.,3–4; E.S.,11–12; E.S.,16–17; E.S.,17–18; E.S.,18–19; E.S.,19–20; E.S.,20–21;

SOUTH CENTRAL
1A,8–10;

SOUTH EXTERIOR
1A,8–10; 1B,1–2; 1B,4–5; 1B,5–6; 1B,6–7; 1B,7–8; 1B,8–9; 1B,10–11; 1B,11–12; 1,1–2; 1,2–3; 1,3–4; 1,6–7; 1,7–8; 1,8–9; 1,9–10; 1,10–11; 1,11–12; 1,12–13; 2,1–2; 2,2–3; 2,3–4; 2,4–5; 2,11–12; 2,14–15; 2,15–16; 3,1–2; 3,2–3; 3,3–4; 3,4–5; 3,5–6; 3,6–7; 3,7–8; 3,8–9; 5,1–2; 5,2–3; 5,11–12; 5,12–13; 5,13–14; 5,14–15; 6,1–2; 6,5–6; 6,6–7; 6,7–8; 6,12–13; 6,14–15; 7,1–2; 7,4–5; 7,11–12; 7,12–13; 7,14–15; 8,1–2; 8,2–3; 8,14–15; 9,1–2; 9,9–10; 9,12–13; 10,1–2; 10,11–12; 11,1–2; 12,11–12; 13,1–2; 13,2–3; 13,3–4; 13,7–8; E.S.,1–2; E.S.,2–3; E.S.,3–4; E.S.,4–5; E.S.,5–6; E.S.,6–7; E.S.,7–8; E.S.,8–9; E.S.,9–10; E.S.,10–11; E.S.,11–12; E.S.,12–13; E.S.,13–14; E.S.,14–15; E.S.,15–16; E.S.,16–17; E.S.,17–18; E.S.,18–19; E.S.,19–20;

TABLE OF LOWER DECK JACK ARCH REPLACEMENTS

NORTH EXTERIOR
1,1–2; 1,2–3; 1,3–4; 1,4–5; 1,5–6; 1,6–7; 1,9–10; 1,10–11; 1,11–12; 1,12–13; 2,1–2; 2,2–3; 2,3–4; 2,4–5; 2,5–6; 2,6–7; 2,9–10; 2,10–11; 2,11–12; 2,12–13; 2,15–16; 3,1–2; 3,2–3; 3,3–4; 3,4–5; 3,5–6; 3,12–13; 3,13–14; 3,14–15; 3,15–16; 3,16–17; 3,17–18; 5,1–2; 5,2–3; 5,3–4; 5,9–10; 5,10–11; 6,4–5; 6,11–12; 6,12–13; 7,3–4; 7,4–5; 8,1–2; 8,2–3; 8,11–12; 8,13–14; 8,14–15; 9,2–3; 9,3–4; 9,10–11; 10,9–10; 10,11–12; 11,1–2; 11,2–3; 11,6–7

NORTH INTERIOR
1,1–2; 1,2–3; 1,4–5; 1,9–10; 1,11–12; 1,12–13; 2,4–5; 2,6–7; 2,12–13; 3,1–2; 3,4–5; 3,12–13; 3,13–14; 3,14–15; 3,15–16; 3,16–17; 3,17–18; 5,1–2; 5,3–4; 5,4–5; 5,11–12; 5,13–14; 6,4–5; 6,10–11; 6,12–13; 7,4–5; 7,11–12; 8,5–6; 8,11–12; 9,1–2; 9,3–4; 9,10–11; 10,9–10

SOUTH INTERIOR
1,1–2; 1,2–3; 1,3–4; 1,4–5; 1,9–10; 1,10–11; 1,11–12; 1,12–13; 2,1–2; 2,3–4; 2,6–7; 2,7–8; 2,9–10; 3,1–2; 3,2–3; 3,3–4; 3,12–13; 3,13–14; 3,14–15; 3,15–16; 3,16–17; 3,17–18; 5,1–2; 5,2–3; 5,3–4; 5,10–11; 5,13–14; 6,4–5; 6,10–11; 7,11–12; 8,5–6; 8,11–12; 9,3–4; 9,4–5; 10,6–7; 10,9–10

SOUTH EXTERIOR
1,1–2; 1,2–3; 1,3–4; 1,4–5; 1,5–6; 1,9–10; 1,11–12; 1,12–13 2,1–2; 2,2–3; 2,3–4; 2,4–5; 2,6–7; 2,9–10; 2,10–11; 2,12–13; 3,1–2; 3,2–3; 3,3–4; 3,4–5; 3,5–6; 3,13–14; 3,14–15; 3,15–16; 3,16–17; 3,17–18; 5,1–2; 5,2–3; 5,3–4; 5,4–5; 5,5–6; 5,6–7; 6,2–3; 6,8–9; 6,13–14; 6,14–15; 7,1–2; 7,5–6; 7,6–7; 7,7–8; 7,10–11; 7,13–14; 8,4–5; 8,11–12; 8,12–13; 9,1–2; 9,2–3; 9,3–4; 9,4–5; 9,5–6; 9,10–11; 10,2–3; 10,3–4; 10,9–10; 11,2–3; 11,5–6; 11,6–7; 11,7–8

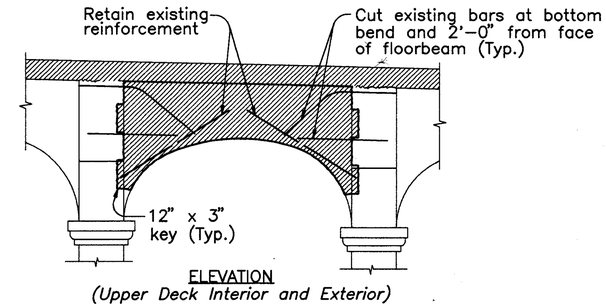

ELEVATION
(Upper Deck Interior and Exterior)

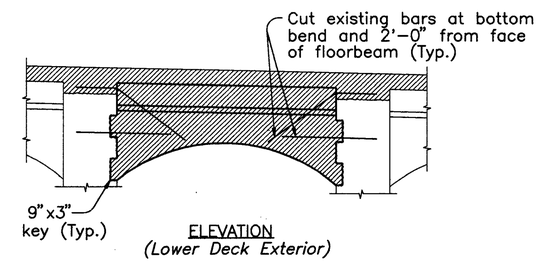

ELEVATION
(Lower Deck Exterior)

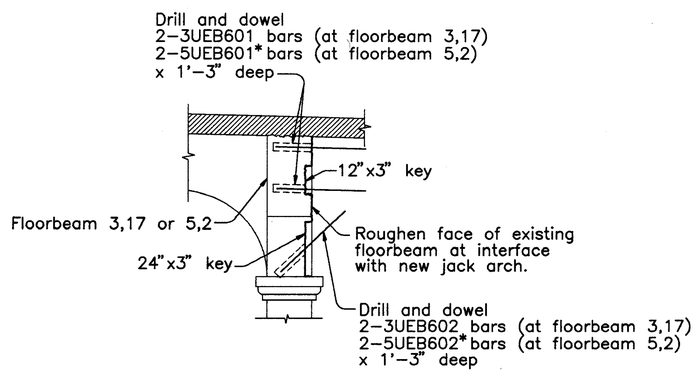

DOWEL DETAIL AT FLOORBEAMS 3,17 AND 5,2
FOR NEW JACK ARCHES 3,17–18,N.I.; 3,17–18,S.I.
5,1–2,N.I.; 5,1–2,S.I.

Note:
* At new jack arch 5,1–2,S.I. only one bar is to be doweled. The second bar shall be placed with the new floorbeam.

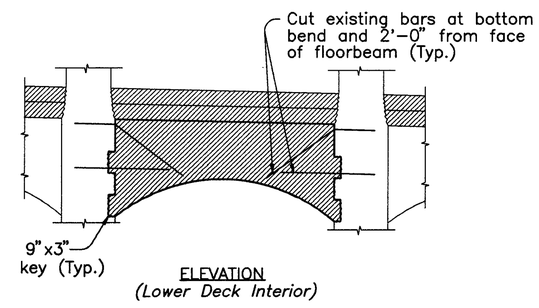

ELEVATION
(Lower Deck Interior)

JACK ARCH REMOVAL DETAILS

NOTES:
– DENOTES PORTIONS OF EXISTING STRUCTURE TO BE REMOVED.

FOR REPLACEMENT DETAILS SEE SHEET 116/270.

COUNTY BRIDGE NO. 84

HOWARD NEEDLES TAMMEN & BERGENDOFF
ARCHITECTS ENGINEERS PLANNERS
HNTB

JACK ARCH REMOVAL DETAILS
BR. NO. CUY – 6 – 1499
REHABILITATION OF
VETERANS MEMORIAL BRIDGE
(U.S. 6, 20, 42 & S.R. 3 OVER CUYAHOGA RIVER)
CLEVELAND CUYAHOGA COUNTY OHIO

DRAWN R.S.Y.	TRACED R.S.Y.	CHECKED B.E.B.	REVIEWED C.A.B.	REVISED
DATE 10/22/93	DATE 10/22/93	DATE 10/25/93	DATE 3/28/94	SHEET 51/270

\11646\REMJA.DWG

FHWA REGION	STATE	PROJECT	
5	OHIO		

184/412

CUYAHOGA COUNTY
CUY – 6 – 14.99

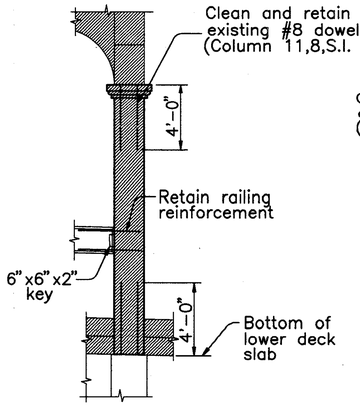

INTERIOR COLUMN AT END FLOORBEAM

NORTH INTERIOR:
1B,12,; 1,1; 1,13; 2,1; 2,16; 3,1; 5,15; 6,1; 6,15; 7,1; 7,15; 8,1; 8,15; 9,1; 9,13; 10,1; 10,12; 11,1
SOUTH INTERIOR:
1B,12,; 1,1; 1,13; 2,1; 2,16; 3,1; 5,15; 6,1; 6,15; 7,1; 7,15; 8,1; 8,15; 9,1; 9,13; 10,1; 10,12; 11,1; (11,8 similar)

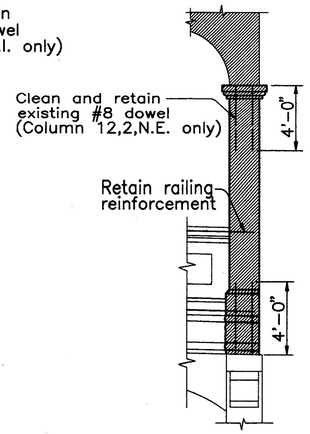

EXTERIOR COLUMN AT END FLOORBEAM

NORTH EXTERIOR:
1B,12,; 1,1; 1,13; 2,1; 2,16; 3,1; 5,15; 6,1; 6,15; 7,1; 7,15; 8,1; 8,15; 9,1; 9,13; 10,1; 10,12; 11,1; (12,2 and 13,8 Similar)
SOUTH EXTERIOR:
1B,12,; 1,1; 1,13; 2,1; 2,16; 3,1; 5,15; 6,1; 6,15; 7,1; 7,15; 8,1; 8,15; 9,1; 9,13; 10,1; 10,12; 11,1; 12,12; (13,8 Similar)

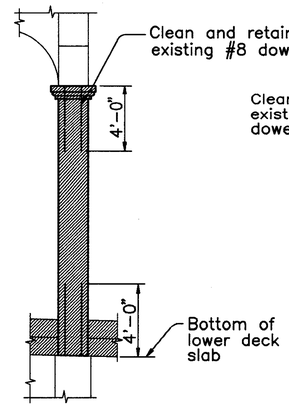

COLUMN 12,12,S.I.

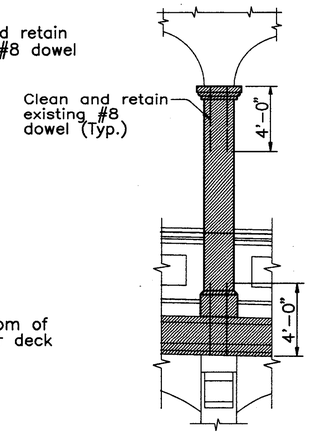

EXTERIOR COLUMN AT INTERIOR FLOORBEAM

NORTH EXTERIOR:
5,13; 12,12
SOUTH EXTERIOR:
1B,4; 2,14; 3,5; 3,6; 3,7; 3,8; 3,9; 5,12; 5,13; 7,9; 8,14; 10,3; 10,5; 10,11

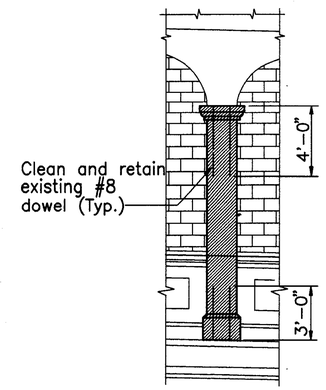

COLUMNS 1A,2,N.E.; 1A,3,S.E. AND 1A,6,N.E.

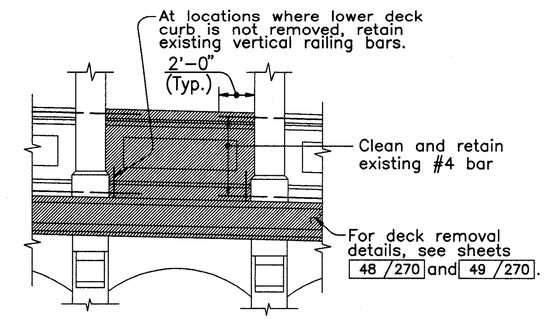

ELEVATION
EXTERIOR RAILING

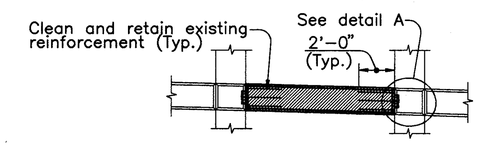

ELEVATION
INTERIOR RAILING

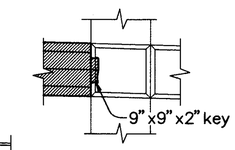

DETAIL A

LOWER DECK RAILING REMOVAL DETAILS

(Spans 1A and 12 similar)

NOTES:

– DENOTES PORTIONS OF EXISTING STRUCTURE TO BE REMOVED.

AT LOCATIONS ADJACENT TO CONCRETE BLOCK WALLS THE CONTRACTOR SHALL PROTECT THE BLOCK FROM DAMAGE DURING REMOVAL OPERATIONS.

FOR COLUMN REMOVAL DETAILS AT TOWER A SEE SHEET 46/270.

FOR COLUMN REMOVAL DETAILS AT TOWER B SEE SHEET 47/270.

FOR COLUMN REMOVAL DETAILS AT FLOORBEAMS 3,18 AND 5,1 SEE SHEET 50/270.

FOR COLUMN REMOVAL DETAILS AT FLOORBEAMS 12,1 AND 13,1 SEE SHEETS 59/270 AND 60/270.

FOR ADDITIONAL COLUMN REMOVAL DETAILS AT EAST SIDE STATION SEE SHEET 62/270.

FOR COLUMN REPLACEMENT DETAILS SEE SHEETS 114/270 AND 115/270.

FOR LOWER DECK RAILING REPLACEMENT DETAILS SEE SHEET 111/270.

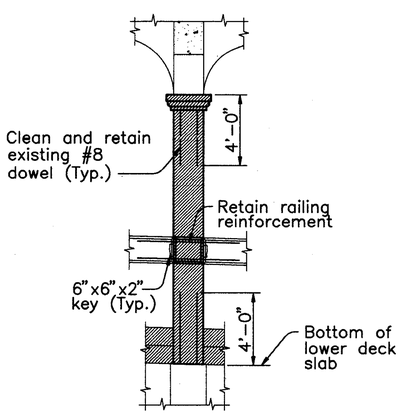

INTERIOR COLUMN AT INTERIOR FLOORBEAM

NORTH INTERIOR:
1,2; 1,12; 2,2; 2,3; 2,4; 2,5; 2,13; 3,3; 3,4; 3,5; 3,6; 3,7; 3,8; 5,9; 6,2; 6,9; 6,12; 6,13; 6,14; 7,2; 7,11; 7,12; 7,14; 10,2; 10,11; 11,2; 11,3; 11,4 11,5; 11,6; 12,2; 12,3; 13,2; 13,3
SOUTH INTERIOR:
1,3; 1,8; 1,9; 2,2; 2,3; 2,13; 3,4; 3,5; 3,6; 3,8; 3,9; 3,12; 5,13; 5,14; 6,2; 7,2; 7,8; 7,9; 7,13; 7,14; 8,14; 9,11; 10,2; 10,6; 10,8

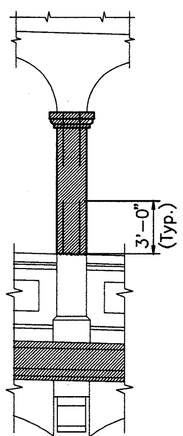

EXTERIOR COLUMN PARTIAL REMOVAL
(Columns 3,6,N.E.; 3,8,N.E.; 7,13,S.E.; 9,10,S.E.; and 9,12,N.E.)

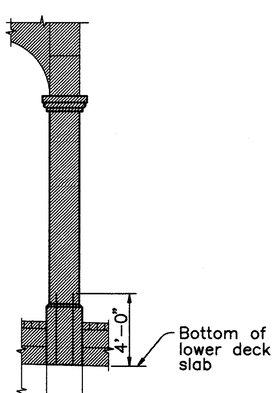

COLUMNS 13,8,N.I. AND 13,8,S.I.
(Columns E.S.1,N.I. and E.S.1,S.I. similar)

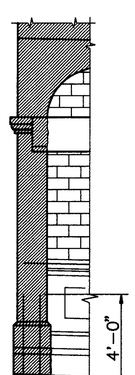

COLUMN E.S.1,S.E.
(Column E.S.1,N.E. similar)

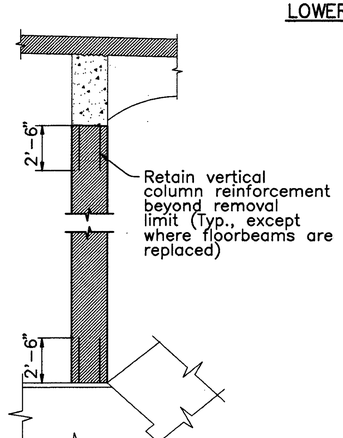

LOWER DECK EXTERIOR COLUMN
(Columns 1,1,S.E.; 2,1,N.E.; 2,1,S.E.; 2,16,N.E.; 2,16,S.E.; 3,1,N.E.; 3,1,S.E.)

COLUMN REMOVAL DETAILS

COUNTY BRIDGE NO. 84

HOWARD NEEDLES TAMMEN & BERGENDOFF
ARCHITECTS ENGINEERS PLANNERS
HNTB

COLUMN AND LOWER DECK RAILING REMOVAL DETAILS
BR. NO. CUY – 6 – 1499
REHABILITATION OF
VETERANS MEMORIAL BRIDGE
(U.S. 6, 20, 42 & S.R. 3 OVER CUYAHOGA RIVER)
CLEVELAND CUYAHOGA COUNTY OHIO

DRAWN R.S.Y.	TRACED R.S.Y.	CHECKED B.E.B.	REVIEWED C.A.B.	REVISED
DATE 10/22/93	DATE 10/22/93	DATE 10/24/93	DATE 3/27/94	SHEET 52/270

\11646\REMCOL.DWG

FHWA REGION	STATE	PROJECT	
5	OHIO		

185/412

CUYAHOGA COUNTY
CUY – 6 – 14.99

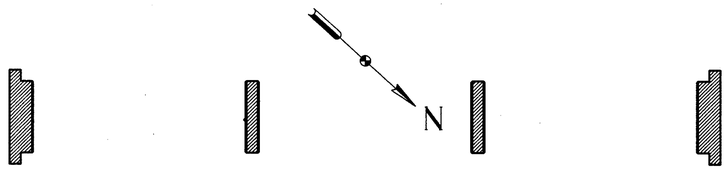

SECTION C–C

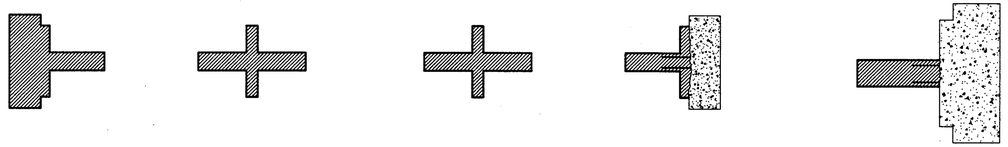

SECTION D–D

SECTION E–E

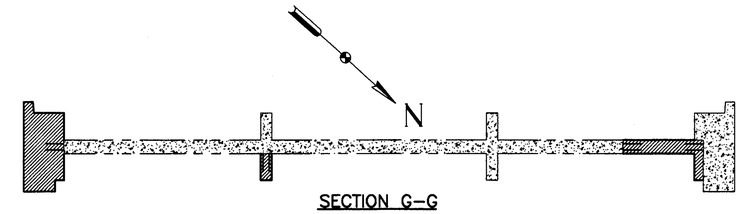

SECTION G–G

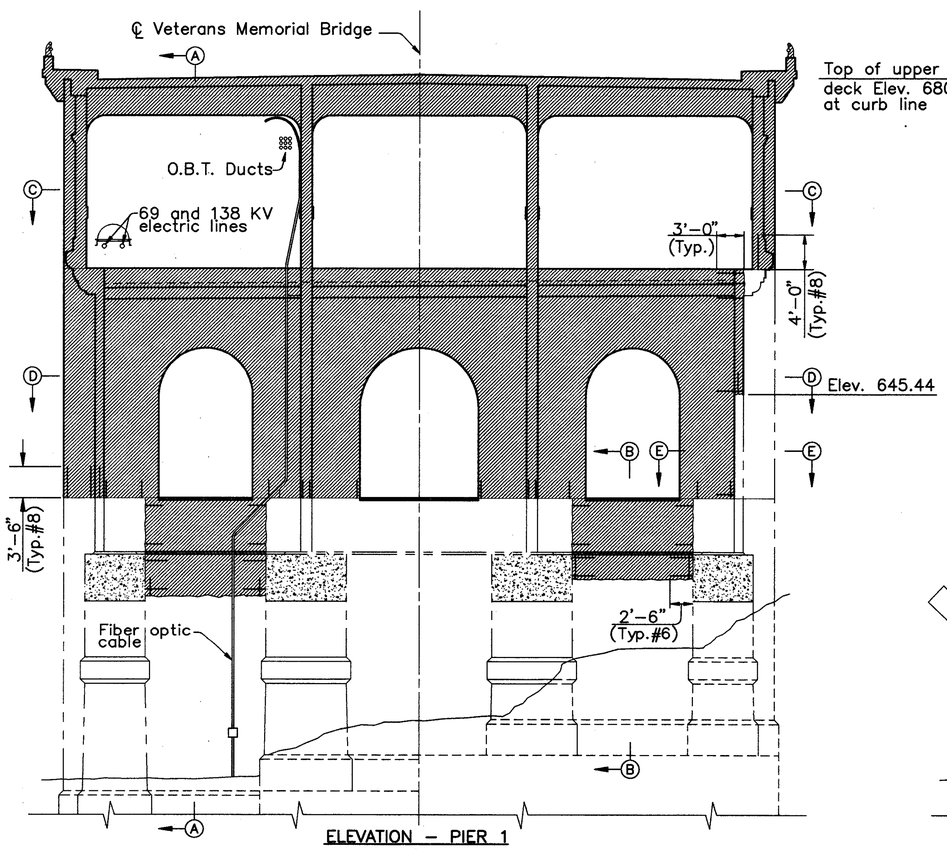

ELEVATION – PIER 1
(Looking west)
(Lower Deck, Columns and Floorbeam 2,1 not shown)

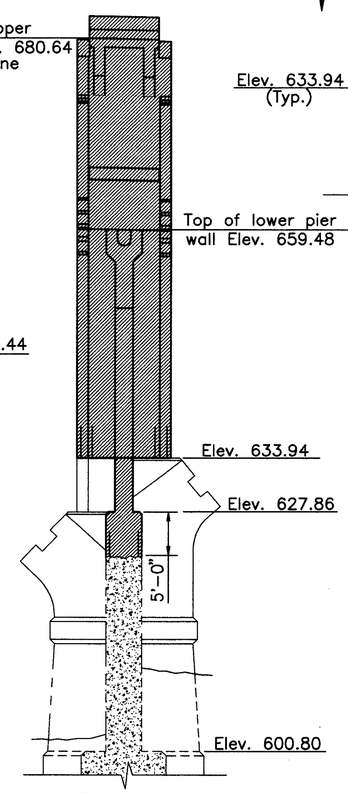

SECTION A–A
(Railing not shown)

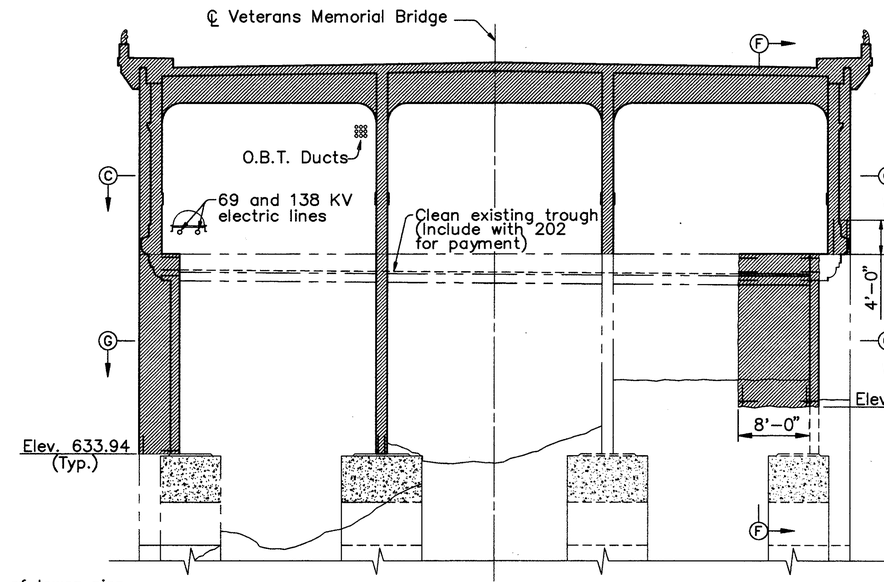

ELEVATION – WEST ABUTMENT
(Looking west)
(Lower Deck, Columns and Floorbeam 1,1 not shown)

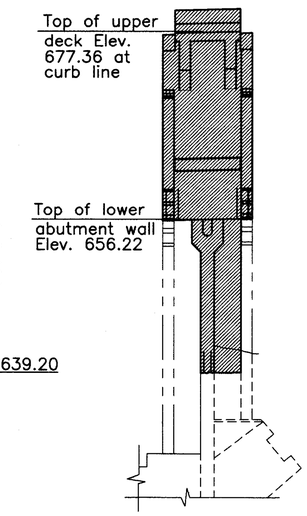

SECTION F–F
(Railing not shown)

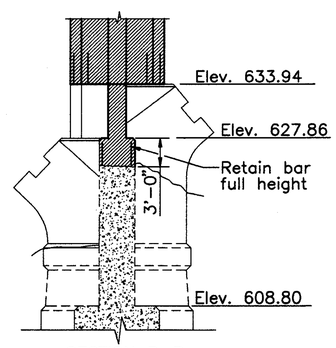

SECTION B–B

NOTES:

▨ – DENOTES PORTIONS OF EXISTING STRUCTURE TO BE REMOVED, EXCLUDING AREAS TO BE REMOVED BY PATCHING.

RETAIN ALL EXISTING REINFORCEMENT EXTENDING FROM EXISTING STRUCTURE INTO PORTIONS OF REBUILT STRUCTURE. EXISTING BARS SHALL BE CUT AT A DISTANCE OF 2'–0" FROM THE REMOVAL LIMIT UNLESS OTHERWISE SPECIFIED.

ALL EXISTING REINFORCEMENT IS NOT SHOWN.

FOR REPLACEMENT DETAILS SEE SHEETS 76/270, 77/270 AND 91/270.

COUNTY BRIDGE NO. 84

HOWARD NEEDLES TAMMEN & BERGENDOFF
ARCHITECTS ENGINEERS PLANNERS
HNTB

REMOVAL DETAILS
WEST ABUTMENT AND PIER 1
BR. NO. CUY – 6 – 1499
REHABILITATION OF
VETERANS MEMORIAL BRIDGE
(U.S. 6, 20, 42 & S.R. 3 OVER CUYAHOGA RIVER)

CLEVELAND CUYAHOGA COUNTY OHIO

DRAWN V.P.	TRACED V.P.	CHECKED W.D.D.	REVIEWED C.A.B.	REVISED
DATE 4/10/93	DATE 4/10/93	DATE 2/11/94	DATE 3/28/94	SHEET 53/270

\11646\PIER 1

FHWA REGION	STATE	PROJECT	
5	OHIO		

186/412

CUYAHOGA COUNTY
CUY – 6 – 14.99

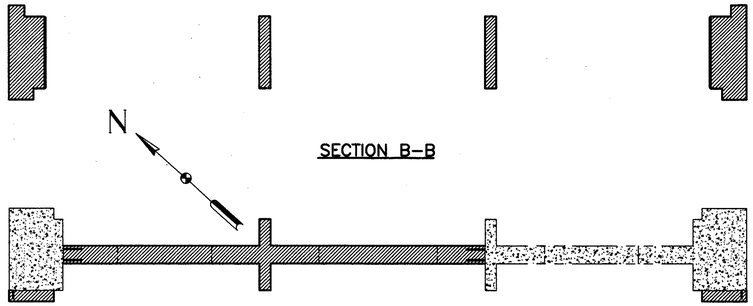

SECTION B–B

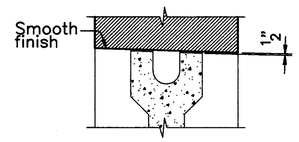

SECTION D–D

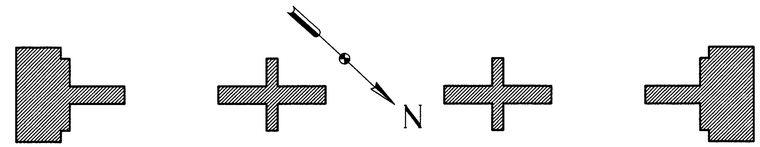

SECTION E–E

SECTION C–C

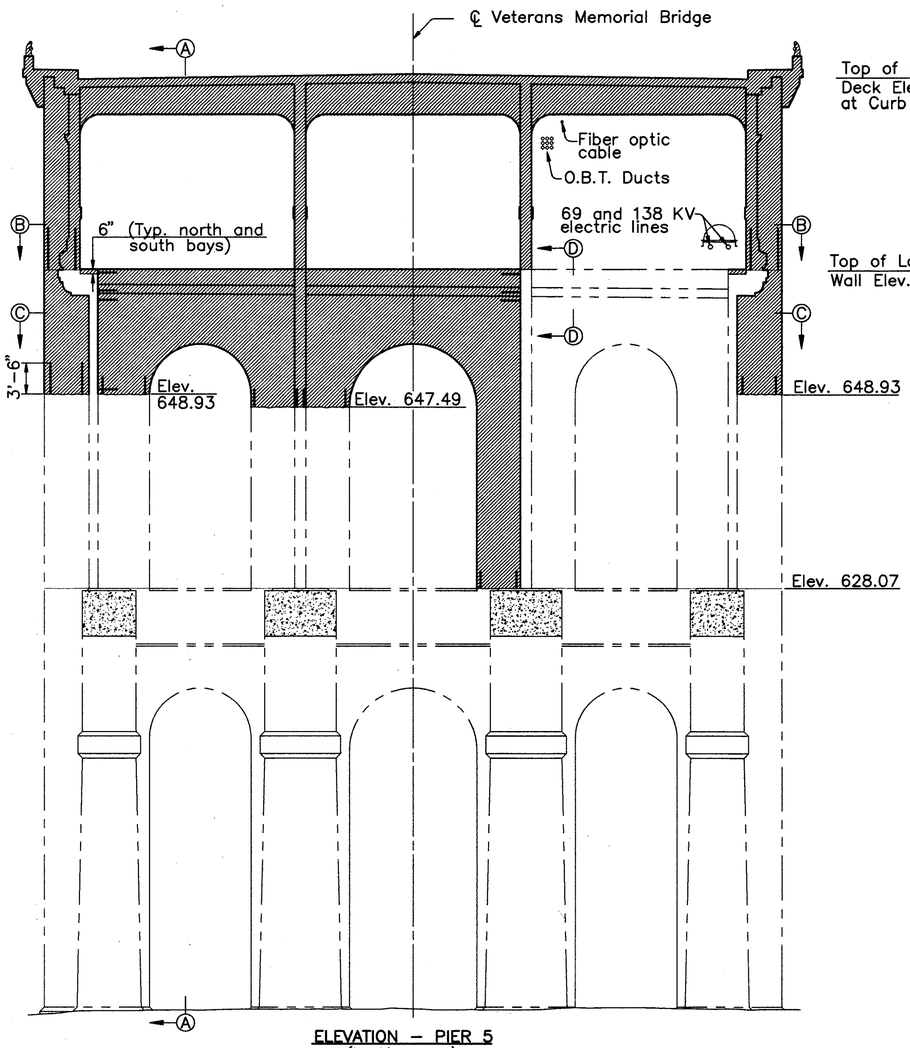

ELEVATION – PIER 5
(Looking east)
(Lower Deck, Columns and Floorbeam 5,15 not shown)

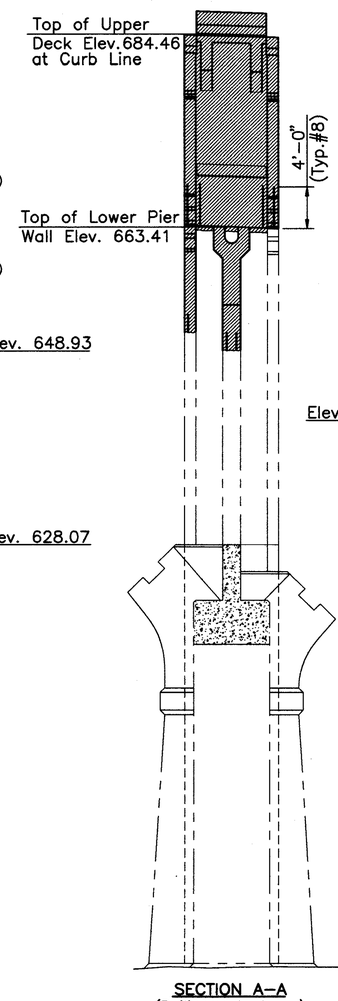

SECTION A–A
(Railing not shown)

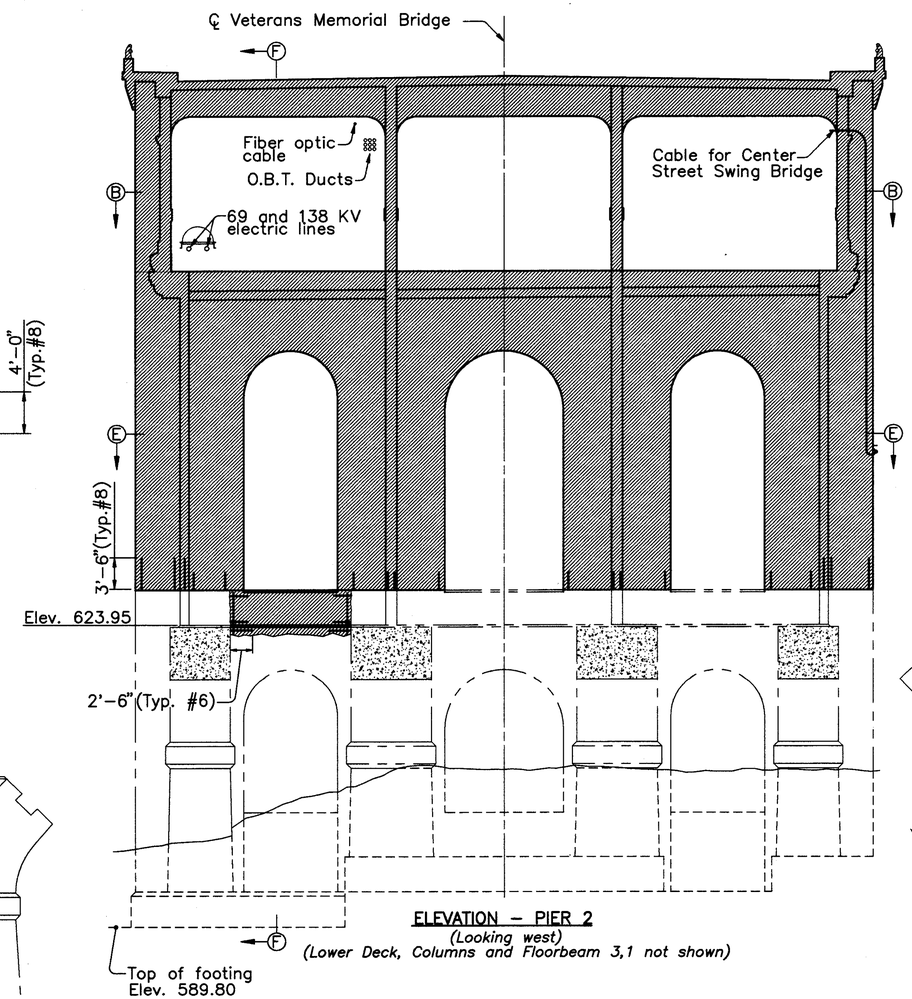

ELEVATION – PIER 2
(Looking west)
(Lower Deck, Columns and Floorbeam 3,1 not shown)

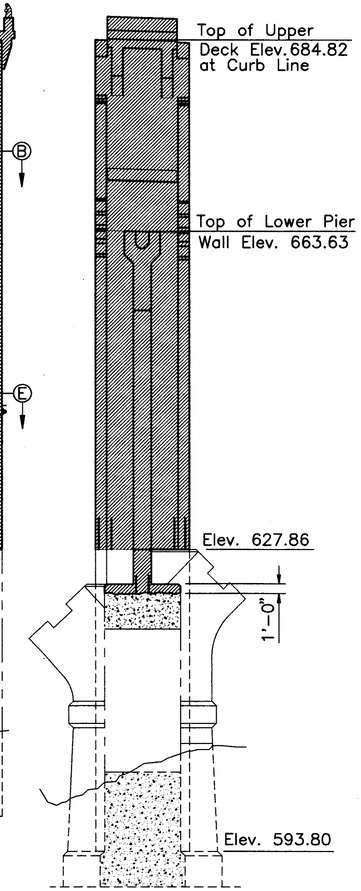

SECTION F–F
(Railing not shown)

NOTES:

– DENOTES PORTIONS OF EXISTING STRUCTURE TO BE REMOVED, EXCLUDING AREAS TO BE REMOVED BY PATCHING.

RETAIN ALL EXISTING REINFORCEMENT EXTENDING FROM EXISTING STRUCTURE INTO PORTIONS OF REBUILT STRUCTURE. EXISTING BARS SHALL BE CUT AT A DISTANCE OF 2'–0" FROM THE REMOVAL LIMIT UNLESS OTHERWISE SPECIFIED.

ALL EXISTING REINFORCEMENT IS NOT SHOWN.

FOR REPLACEMENT DETAILS SEE SHEETS 78/270, 81/270 AND 92/270.

COUNTY BRIDGE NO. 84

HOWARD NEEDLES TAMMEN & BERGENDOFF
ARCHITECTS ENGINEERS PLANNERS
HNTB

REMOVAL DETAILS PIERS 2 AND 5

BR. NO. CUY – 6 – 1499
REHABILITATION OF
VETERANS MEMORIAL BRIDGE
(U.S. 6, 20, 42 & S.R. 3 OVER CUYAHOGA RIVER)

CLEVELAND CUYAHOGA COUNTY OHIO

DRAWN V.P.	TRACED V.P.	CHECKED W.D.D.	REVIEWED C.A.B.	REVISED
DATE 3/19/93	DATE 3/19/93	DATE 2/16/94	DATE 3/31/94	SHEET 54/270

\11646\PIER 25

FHWA REGION	STATE	PROJECT	
5	OHIO		

187/412

CUYAHOGA COUNTY
CUY – 6 – 14.99

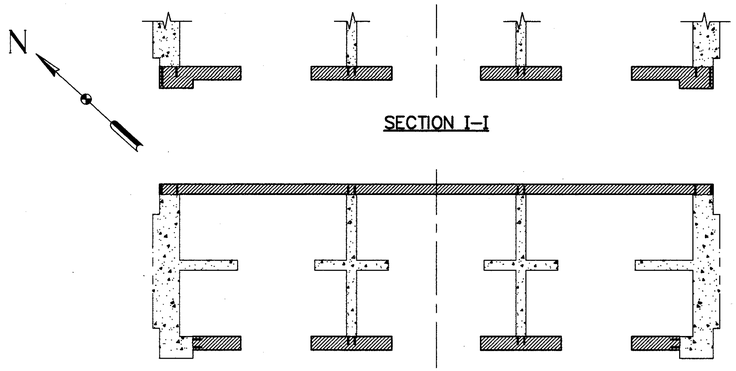

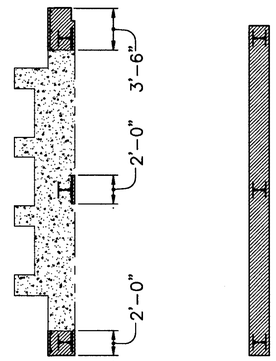

SECTION E–E
(Removal at north side similar)

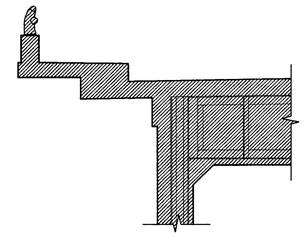

SECTION F–F

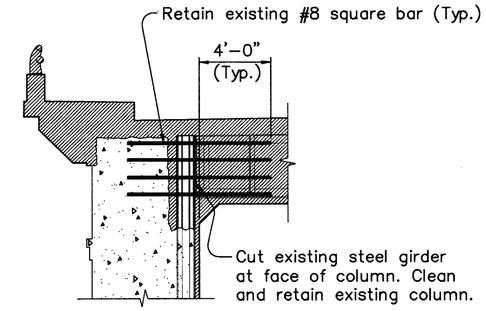

SECTION G–G

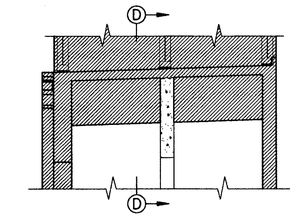

SECTION C–C

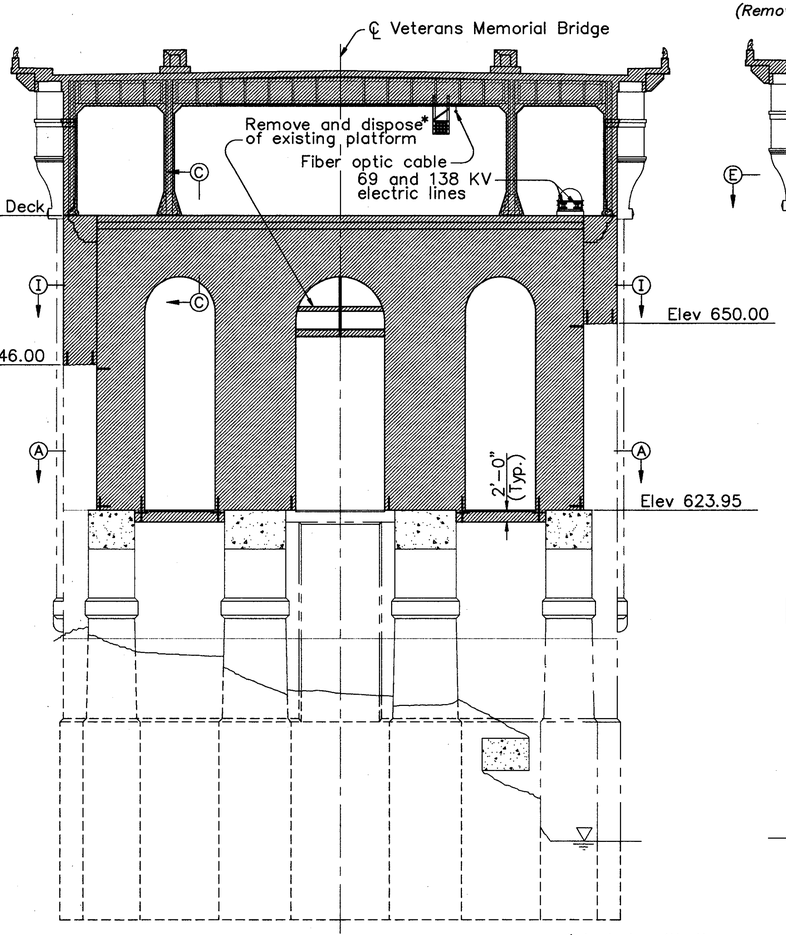

ELEVATION – WEST FACE
(Columns and Floorbeam 3,18 not shown)

* Include with Item 202 for payment

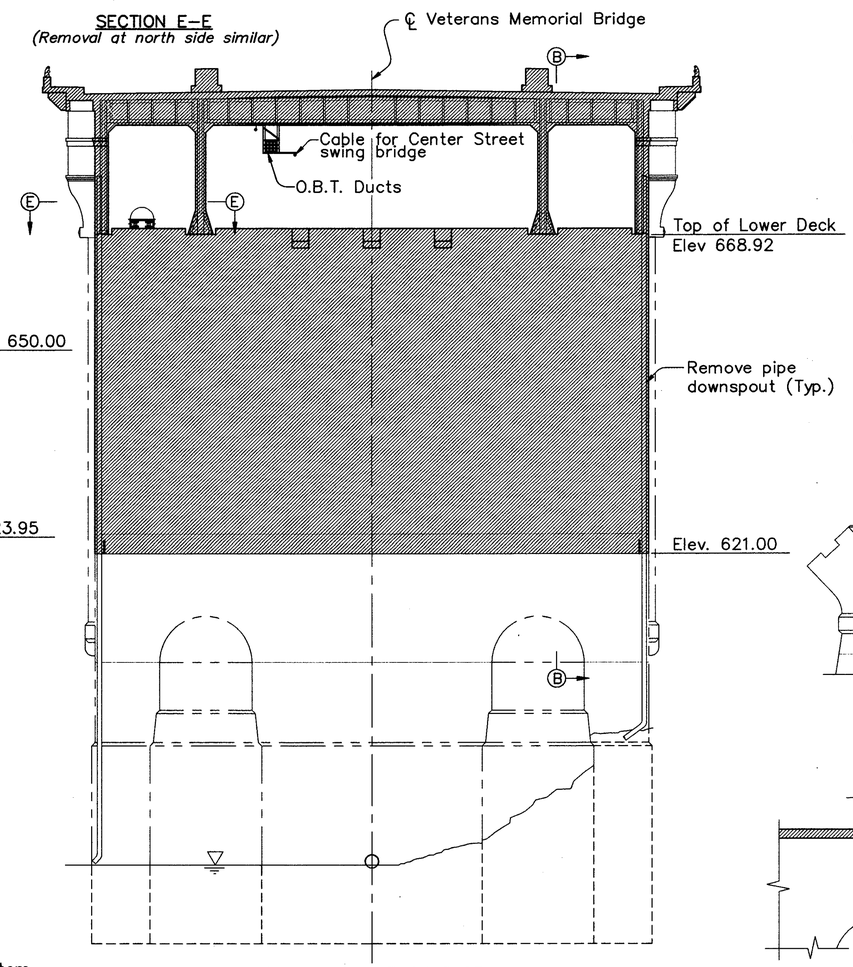

ELEVATION – EAST FACE
(Span 4 panel point 0 not shown)

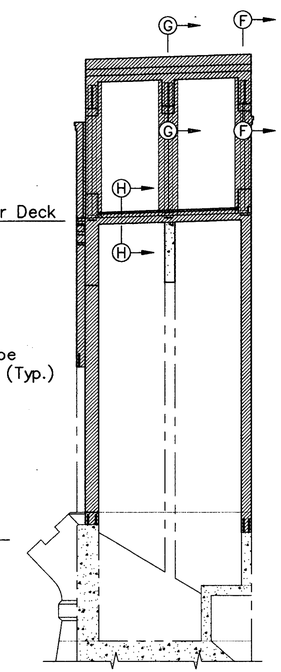

SECTION B–B
(Railing not shown)

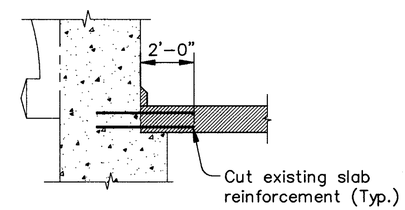

SECTION H–H

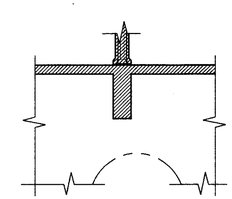

SECTION D–D

NOTES:

– DENOTES PORTIONS OF EXISTING STRUCTURE TO BE REMOVED, EXCLUDING AREAS TO BE REMOVED BY PATCHING.

FOR REPLACEMENT DETAILS SEE SHEETS 79/270, 92/270, 98/270 AND 198/270.

RETAIN ALL EXISTING REINFORCEMENT EXTENDING FROM EXISTING STRUCTURE INTO PORTIONS OF REBUILT STRUCTURE. EXISTING BARS SHALL BE CUT AT A DISTANCE OF 2'–0" FROM THE REMOVAL LIMIT UNLESS OTHERWISE SPECIFIED.

ALL EXISTING REINFORCEMENT IS NOT SHOWN.

WALLS AT EAST AND WEST FACES OF PIER BELOW LOWER DECK SHALL BE REMOVED AND REPLACED ONE AT A TIME.

THE CONTRACTOR'S DEMOLITION PROCEDURE SHALL ENSURE STABILITY OF UPPER PIER SHAFTS DURING REMOVAL AND REPLACEMENT OPERATIONS.

COUNTY BRIDGE NO. 84

HOWARD NEEDLES TAMMEN & BERGENDOFF
ARCHITECTS ENGINEERS PLANNERS
HNTB

REMOVAL DETAILS
PIER 3
BR. NO. CUY – 6 – 1499
REHABILITATION OF
VETERANS MEMORIAL BRIDGE
(U.S. 6, 20, 42 & S.R. 3 OVER CUYAHOGA RIVER)

CLEVELAND CUYAHOGA COUNTY OHIO

DRAWN B.E.B.	TRACED B.E.B.	CHECKED W.D.D.	REVIEWED C.A.B.	REVISED
DATE 1/29/93	DATE 1/29/93	DATE 2/16/94	DATE 3/31/94	SHEET 55/270

\11646\PIER3.DWG

FHWA REGION	STATE	PROJECT	
5	OHIO		

188 / 412

CUYAHOGA COUNTY
CUY – 6 – 14.99

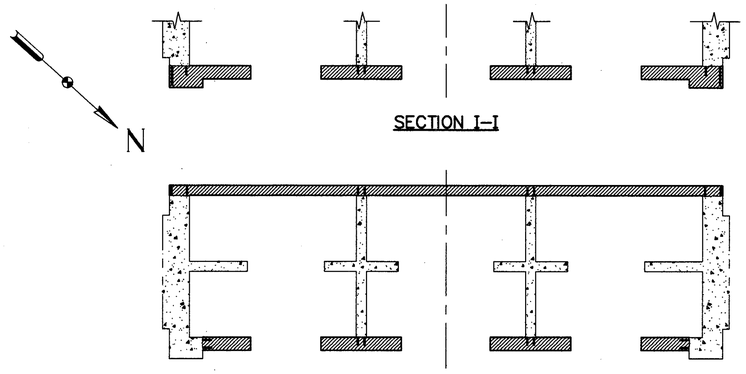

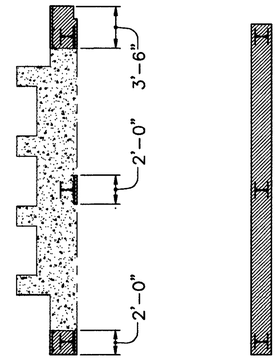

SECTION E–E
(Removal at south side similar)

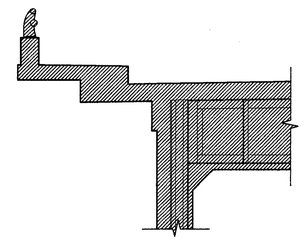

SECTION F–F

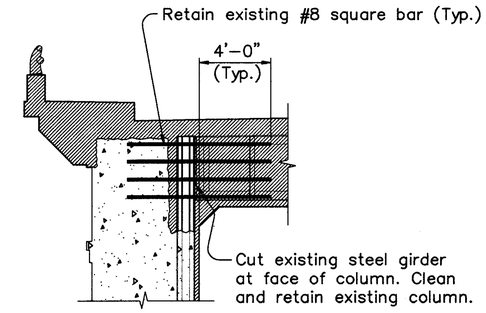

SECTION G–G

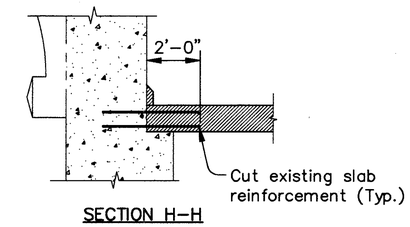

SECTION H–H

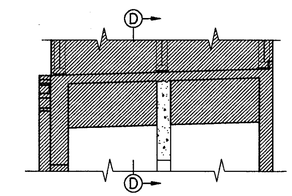

SECTION C–C

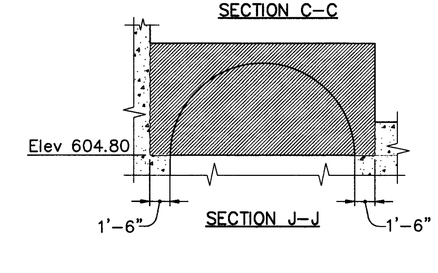

SECTION J–J

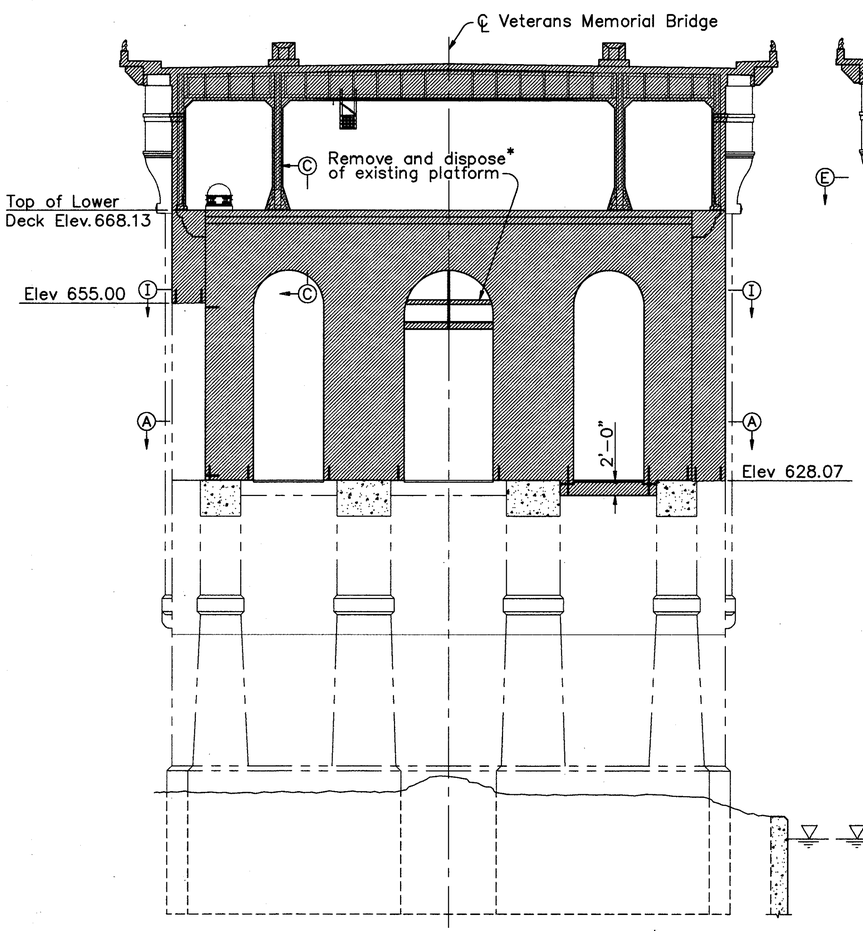

ELEVATION – EAST FACE
(Columns and Floorbeam 5,1 not shown)

*Include with item 202 for payment.

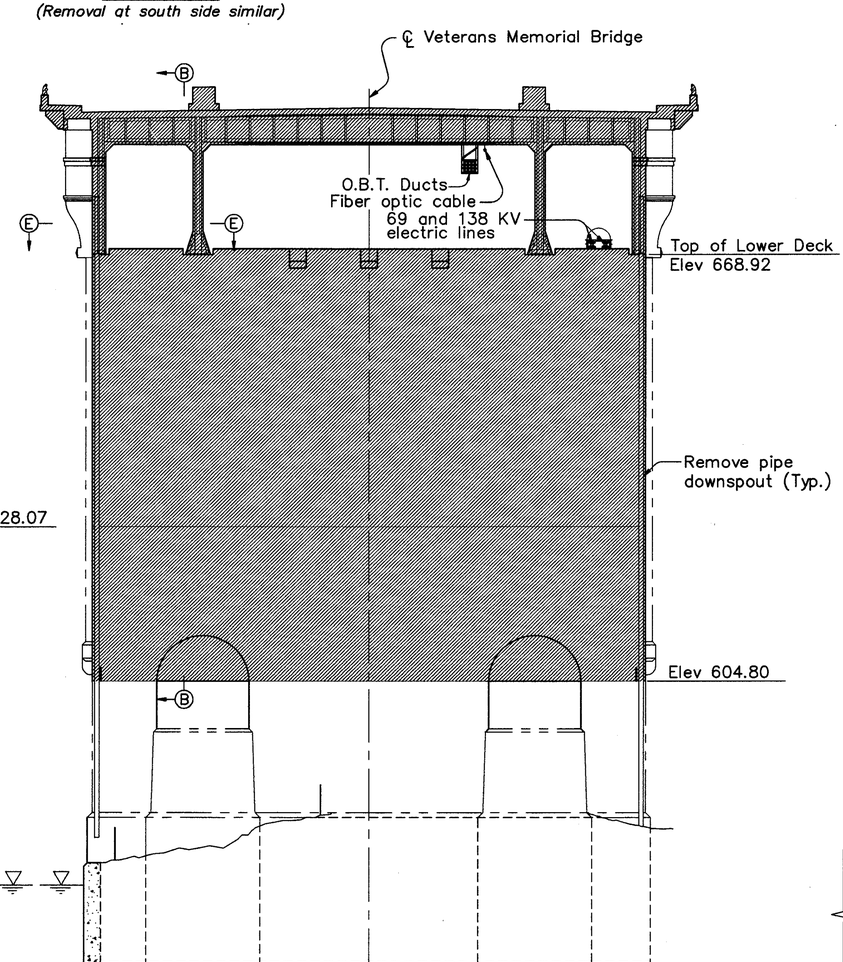

ELEVATION – WEST FACE
(Span 4 panel point 0' not shown)

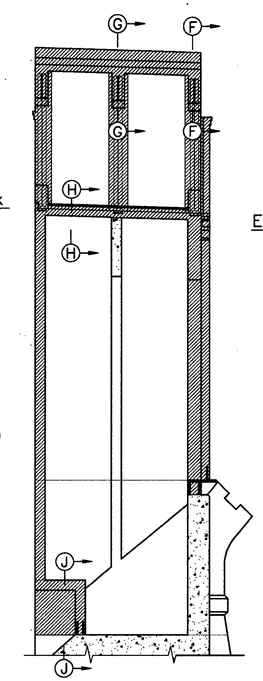

SECTION B–B
(Railing not shown)

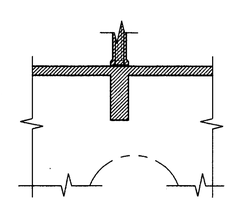

SECTION D–D

NOTES:

– DENOTES PORTIONS OF EXISTING STRUCTURE TO BE REMOVED, EXCLUDING AREAS TO BE REMOVED BY PATCHING.

FOR REPLACEMENT DETAILS SEE SHEETS 80/270, 92/270, 98/270 AND 198/270.

RETAIN ALL EXISTING REINFORCEMENT EXTENDING FROM EXISTING STRUCTURE INTO PORTIONS OF REBUILT STRUCTURE. EXISTING BARS SHALL BE CUT AT A DISTANCE OF 2'–0" FROM THE REMOVAL LIMIT UNLESS OTHERWISE SPECIFIED.

ALL EXISTING REINFORCEMENT IS NOT SHOWN.

WALLS AT EAST AND WEST FACES OF PIER BELOW LOWER DECK SHALL BE REMOVED AND REPLACED ONE AT A TIME.

THE CONTRACTOR'S DEMOLITION PROCEDURE SHALL ENSURE STABILITY OF UPPER PIER SHAFTS DURING REMOVAL AND REPLACEMENT OPERATIONS.

COUNTY BRIDGE NO. 84

HOWARD NEEDLES TAMMEN & BERGENDOFF
ARCHITECTS ENGINEERS PLANNERS
HNTB

REMOVAL DETAILS
PIER 4
BR. NO. CUY – 6 – 1499
REHABILITATION OF
VETERANS MEMORIAL BRIDGE
(U.S. 6, 20, 42 & S.R. 3 OVER CUYAHOGA RIVER)

CLEVELAND CUYAHOGA COUNTY OHIO

DRAWN B.E.B.	TRACED B.E.B.	CHECKED W.D.D.	REVIEWED C.A.B.	REVISED
DATE 1/29/93	DATE 1/29/93	DATE 3/8/94	DATE 3/31/94	SHEET 56/270

\11646\PIER4.DWG

FHWA REGION	STATE	PROJECT	
5	OHIO		

189
412

CUYAHOGA COUNTY
CUY – 6 – 14.99

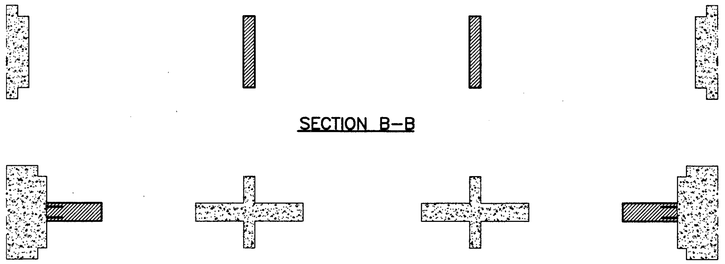

SECTION B–B

SECTION C–C

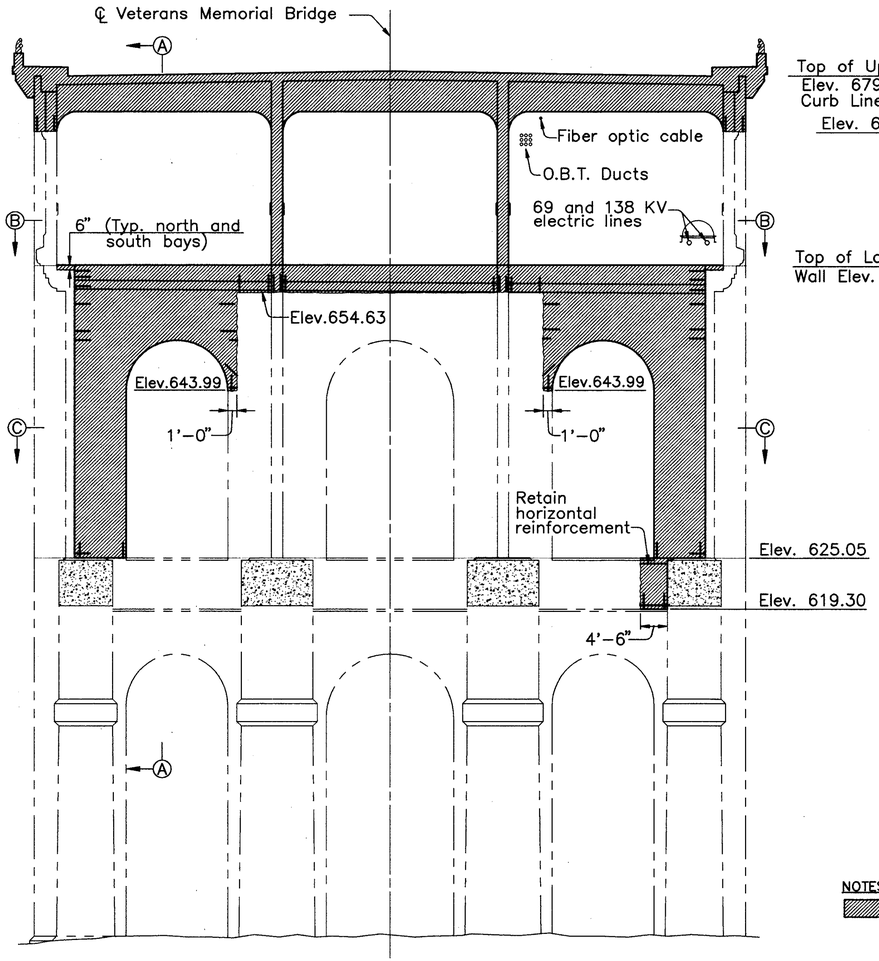

ELEVATION – PIER 6
(Looking east)
(Lower Deck, Columns and Floorbeam 6,15 not shown)

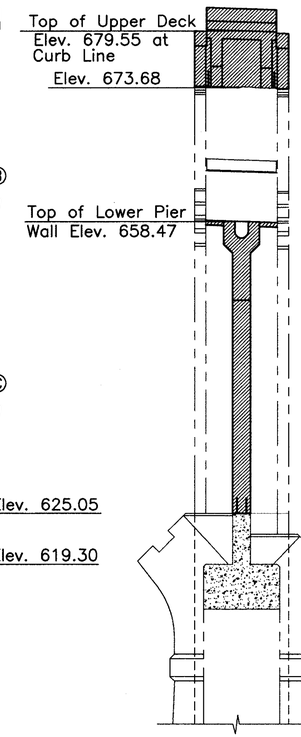

SECTION A–A
(Railing not shown)

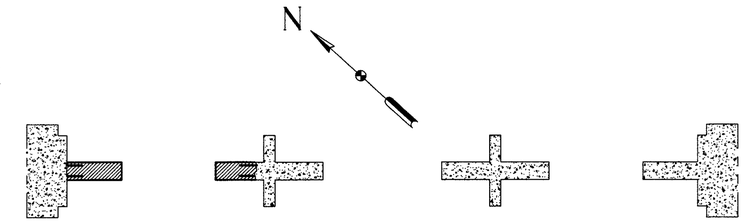

SECTION E–E

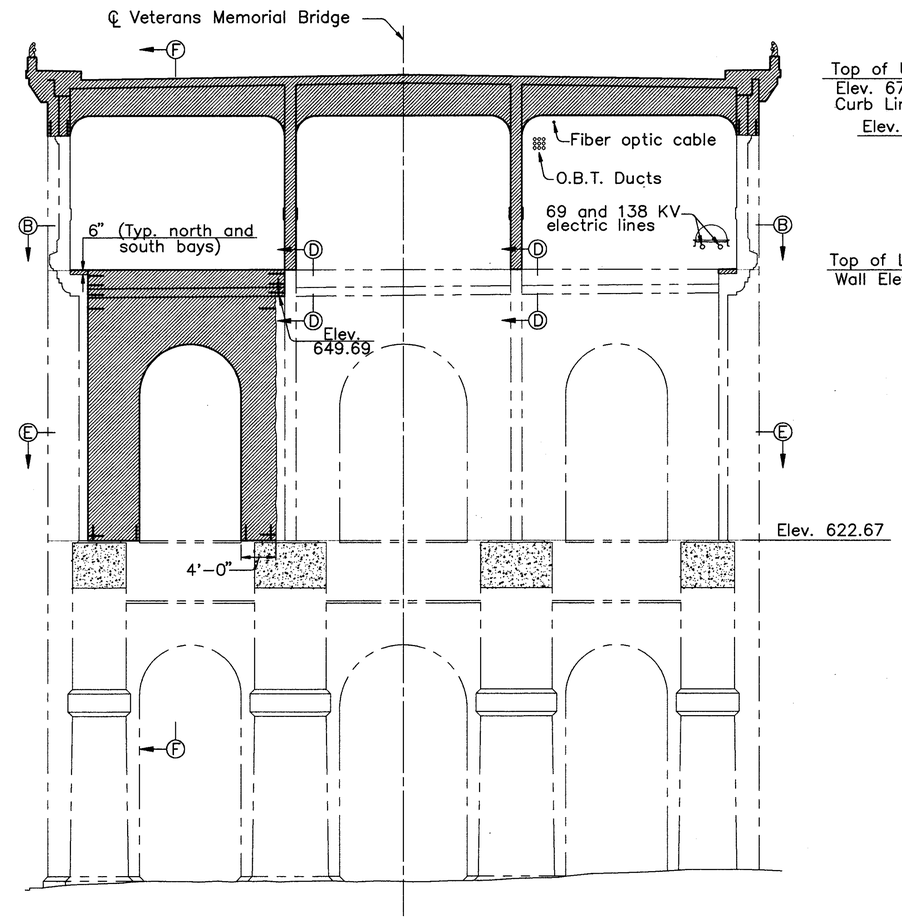

ELEVATION – PIER 7
(Looking east)
(Lower Deck, Columns and Floorbeam 7,15 not shown)

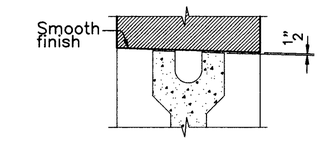

SECTION D–D

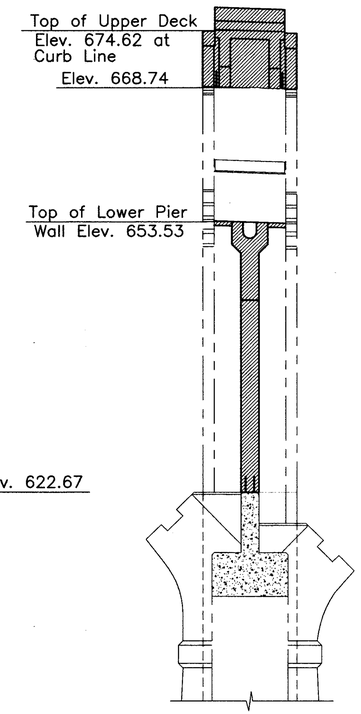

SECTION F–F
(Railing not shown)

NOTES:

▨ – DENOTES PORTIONS OF EXISTING STRUCTURE TO BE REMOVED, EXCLUDING AREAS TO BE REMOVED BY PATCHING.

RETAIN ALL EXISTING REINFORCEMENT EXTENDING FROM EXISTING STRUCTURE INTO PORTIONS OF REBUILT STRUCTURE. EXISTING BARS SHALL BE CUT AT A DISTANCE OF 2'–0" FROM THE REMOVAL LIMIT UNLESS OTHERWISE SPECIFIED.

ALL EXISTING REINFORCEMENT IS NOT SHOWN.

FOR REPLACEMENT DETAILS SEE SHEETS 82/270, 83/270 AND 91/270.

COUNTY BRIDGE NO. 84

HOWARD NEEDLES TAMMEN & BERGENDOFF
ARCHITECTS ENGINEERS PLANNERS
HNTB

REMOVAL DETAILS
PIERS 6 AND 7
BR. NO. CUY – 6 – 1499
REHABILITATION OF
VETERANS MEMORIAL BRIDGE
(U.S. 6, 20, 42 & S.R. 3 OVER CUYAHOGA RIVER)
CLEVELAND CUYAHOGA COUNTY OHIO

DRAWN B.E.B.	TRACED B.E.B.	CHECKED W.D.D.	REVIEWED C.A.B.	REVISED
DATE 6/9/93	DATE 6/9/93	DATE 2/17/94	DATE 3/31/94	SHEET 57/270

\11646\PIER67

FHWA REGION	STATE	PROJECT	
5	OHIO		

190
412

CUYAHOGA COUNTY
CUY – 6 – 14.99

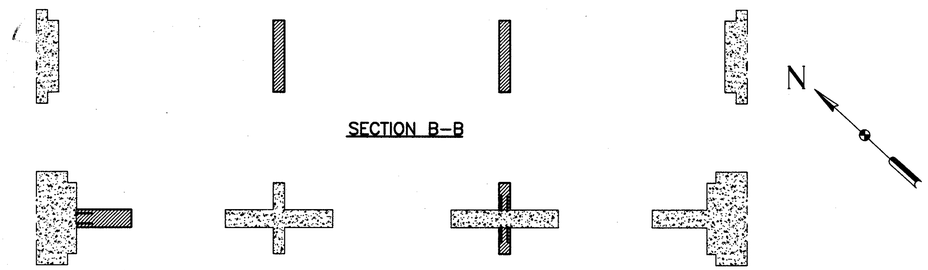

SECTION B–B

SECTION C–C

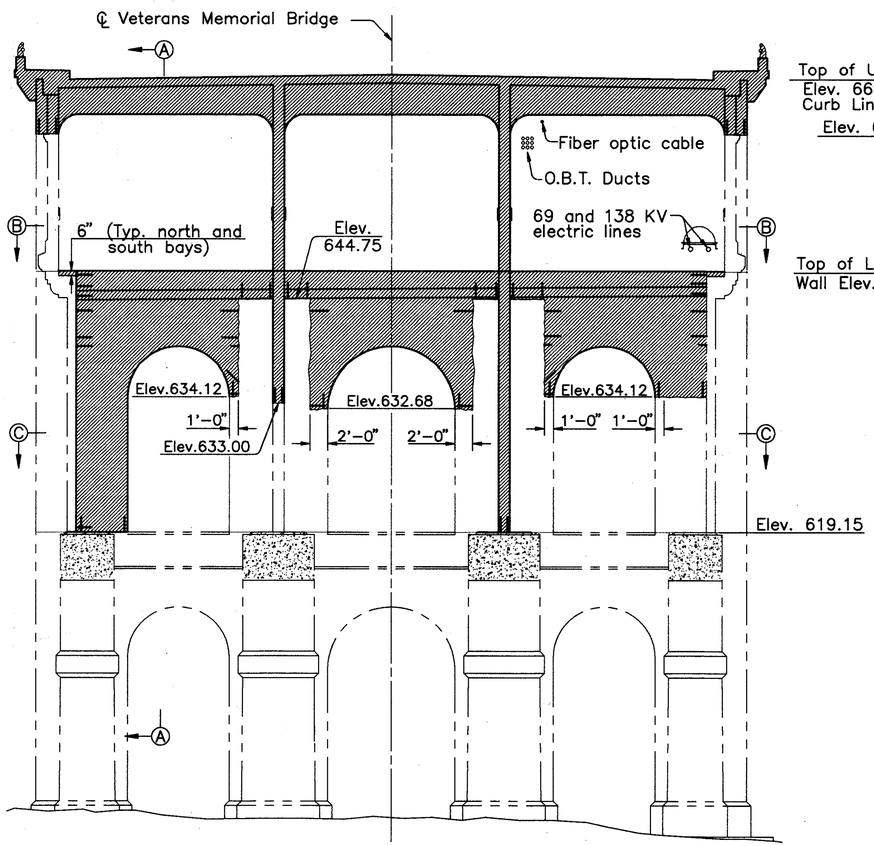

ELEVATION – PIER 8
(Looking East)
(Lower Deck, Columns and Floorbeam 8,15 not shown)

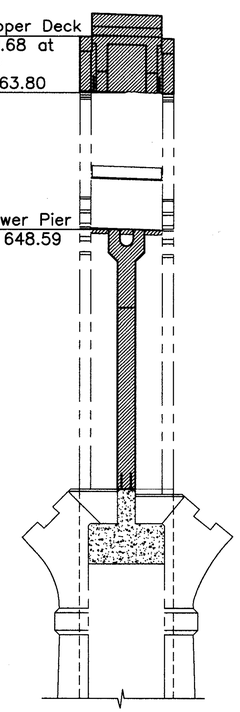

SECTION A–A
(Railing not shown)

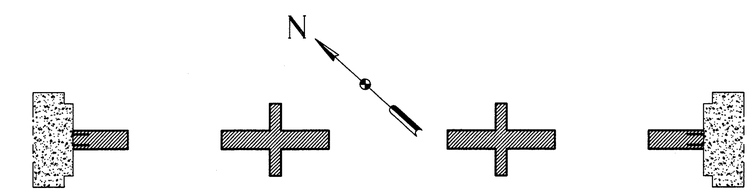

SECTION E–E

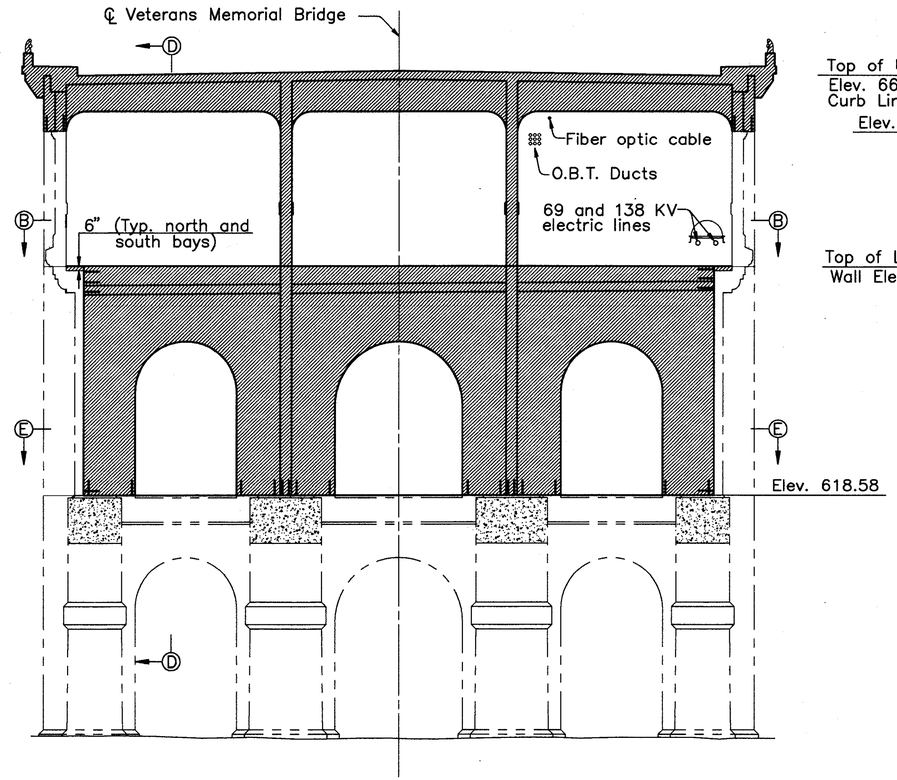

ELEVATION – PIER 9
(Looking East)
(Lower Deck, Columns and Floorbeam 9,13 not shown)

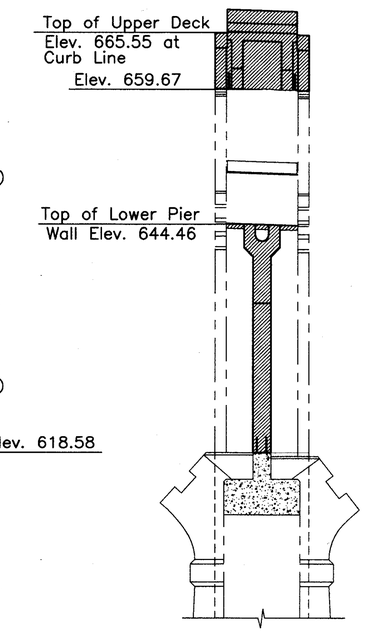

SECTION D–D
(Railing not shown)

NOTES:

▨ – DENOTES PORTIONS OF EXISTING STRUCTURE TO BE REMOVED, EXCLUDING AREAS TO BE REMOVED BY PATCHING.

RETAIN ALL EXISTING REINFORCEMENT EXTENDING FROM EXISTING STRUCTURE INTO PORTIONS OF REBUILT STRUCTURE. EXISTING BARS SHALL BE CUT AT A DISTANCE OF 2'–0" FROM THE REMOVAL LIMIT UNLESS OTHERWISE SPECIFIED.

ALL EXISTING REINFORCEMENT IS NOT SHOWN.

FOR REPLACEMENT DETAILS SEE SHEETS 84/270, 85/270 AND 91/270.

COUNTY BRIDGE NO. 84

HOWARD NEEDLES TAMMEN & BERGENDOFF
ARCHITECTS ENGINEERS PLANNERS
HNTB

REMOVAL DETAILS
PIERS 8 AND 9
BR. NO. CUY – 6 – 1499
REHABILITATION OF
VETERANS MEMORIAL BRIDGE
(U.S. 6, 20, ~~42~~ & S.R. 3 OVER CUYAHOGA RIVER)

CLEVELAND CUYAHOGA COUNTY OHIO

DRAWN B.E.B.	TRACED B.E.B.	CHECKED W.D.D.	REVIEWED C.A.B.	REVISED
DATE 6/9/93	DATE 6/9/93	DATE 2/18/94	DATE 3/31/94	SHEET 58/270

\11646\PIER 89

2-4

FHWA REGION	STATE	PROJECT	
5	OHIO		

191 / 412

CUYAHOGA COUNTY
CUY – 6 – 14.99

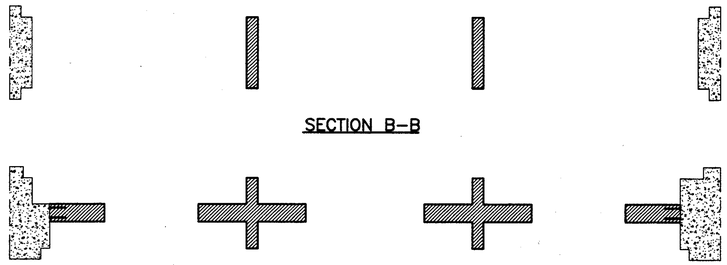

SECTION B–B

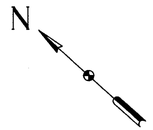

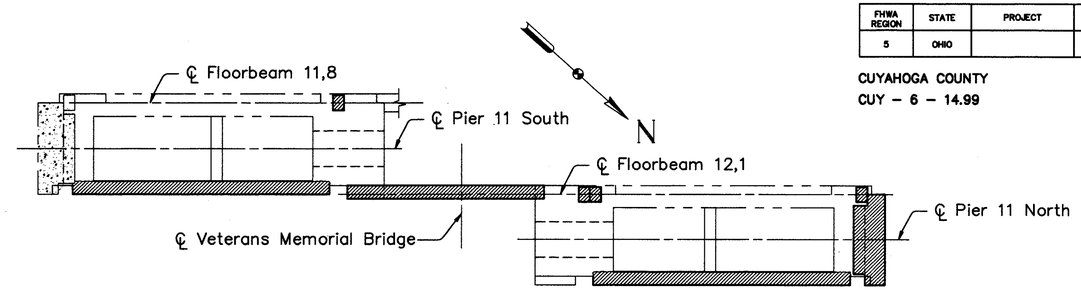

SECTION D–D
(Lower deck not shown)

SECTION C–C

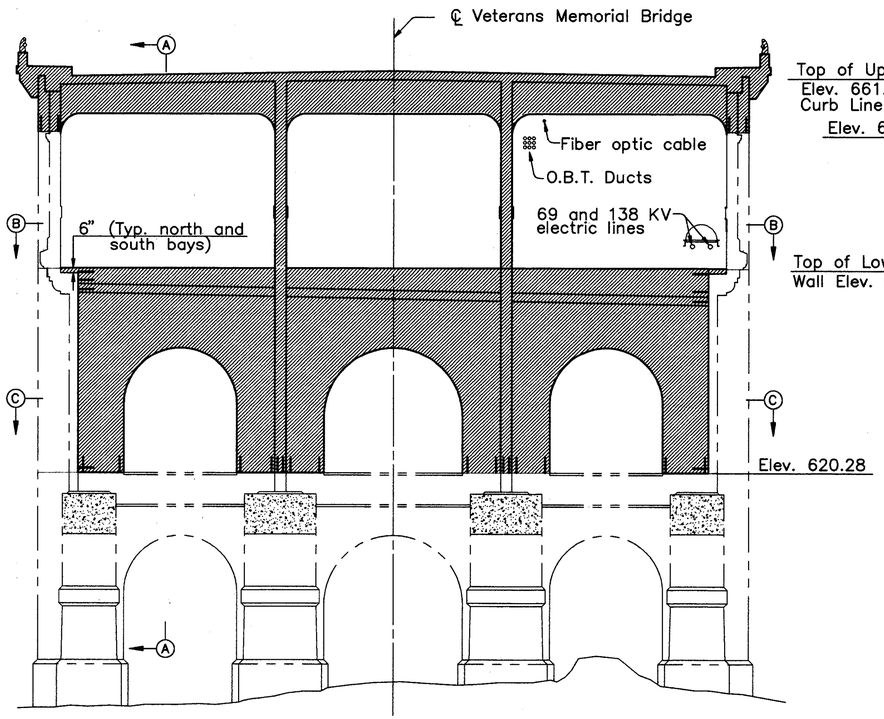

ELEVATION – PIER 10
(Looking East)
(Lower Deck, Columns and Floorbeam 10,12 not shown)

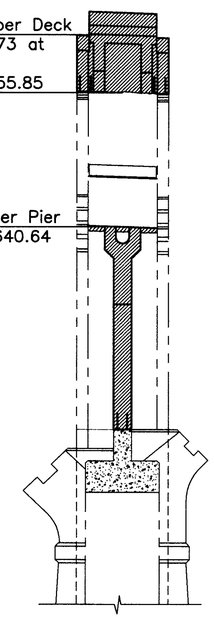

SECTION A–A
(Railing not shown)

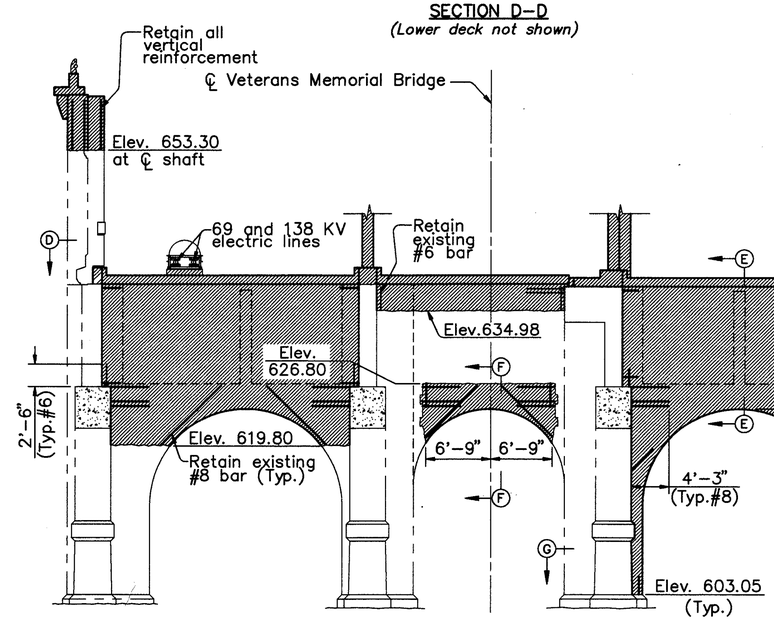

ELEVATION – PIER 11
(Looking West)
(Floorbeams 12,1 and 12,2 not shown)

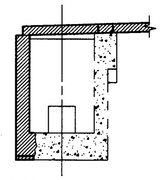

SECTION E–E

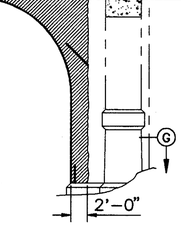

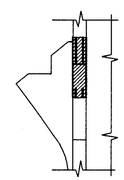

SECTION F–F

NOTES:

– DENOTES PORTIONS OF EXISTING STRUCTURE TO BE REMOVED, EXCLUDING AREAS TO BE REMOVED BY PATCHING.

RETAIN ALL EXISTING REINFORCEMENT EXTENDING FROM EXISTING STRUCTURE INTO PORTIONS OF REBUILT STRUCTURE. EXISTING BARS SHALL BE CUT AT A DISTANCE OF 2'–0" FROM THE REMOVAL LIMIT UNLESS OTHERWISE SPECIFIED.

ALL EXISTING REINFORCEMENT IS NOT SHOWN.

FOR REPLACEMENT DETAILS SEE SHEETS 86/270, 87/270, 88/270 AND 91/270.

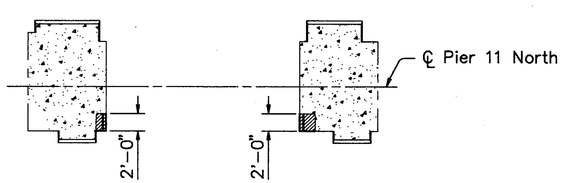

SECTION G–G

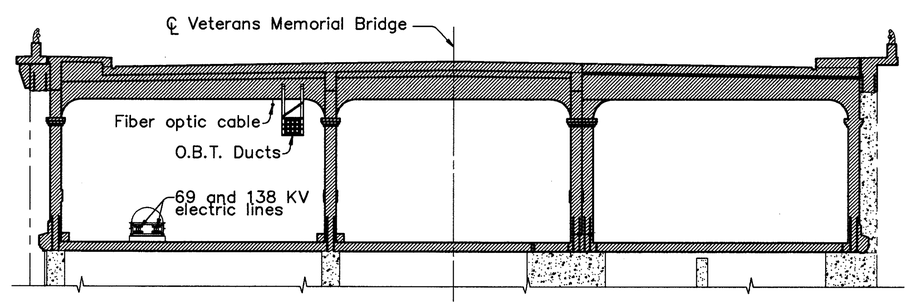

ELEVATION – FLOORBEAM 12.1
(Looking West)

COUNTY BRIDGE NO. 84

HOWARD NEEDLES TAMMEN & BERGENDOFF
ARCHITECTS ENGINEERS PLANNERS
HNTB

REMOVAL DETAILS
PIERS 10 AND 11
BR. NO. CUY – 6 – 1499
REHABILITATION OF
VETERANS MEMORIAL BRIDGE
(U.S. 6, 20, 42 & S.R. 3 OVER CUYAHOGA RIVER)
CLEVELAND CUYAHOGA COUNTY OHIO

DRAWN B.E.B.	TRACED B.E.B.	CHECKED W.D.D.	REVIEWED C.A.B.	REVISED
DATE 6/14/93	DATE 6/14/93	DATE 2/22/94	DATE 3/31/94	SHEET 59/270

\11646\PIER10

FHWA REGION	STATE	PROJECT	
5	OHIO		

192/412

CUYAHOGA COUNTY
CUY – 6 – 14.99

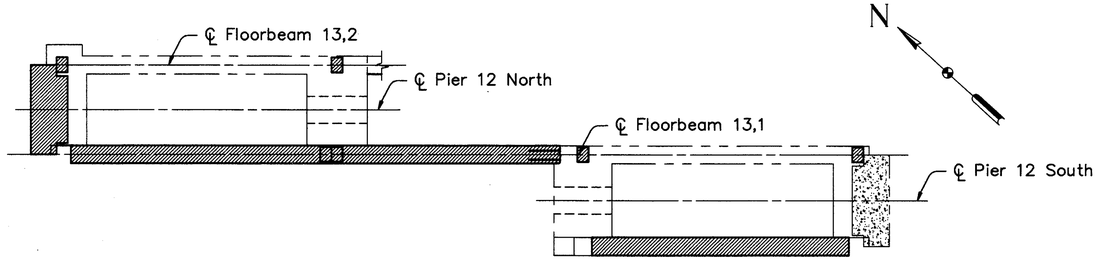

SECTION A–A
(Lower deck not shown)

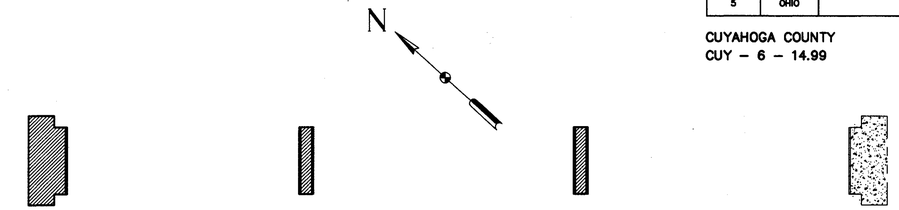

SECTION E–E

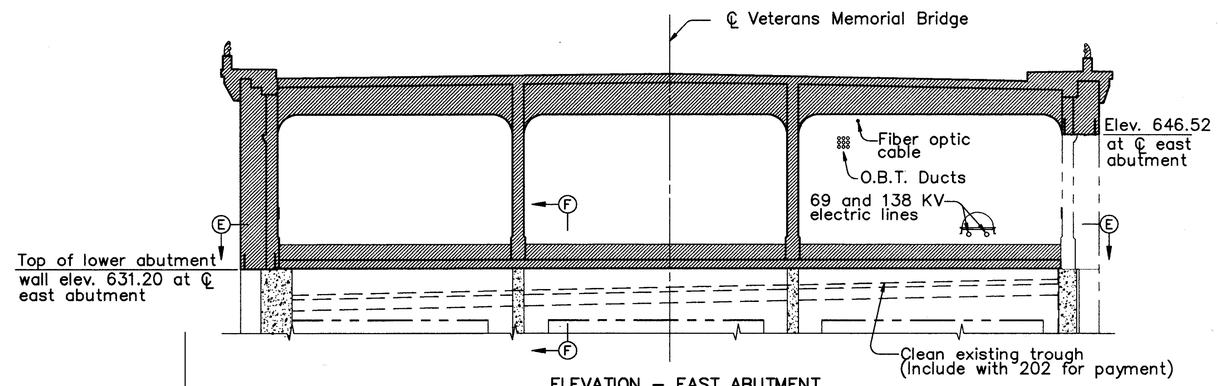

ELEVATION – EAST ABUTMENT
(Looking east)
(Floorbeam 13,8 not shown)

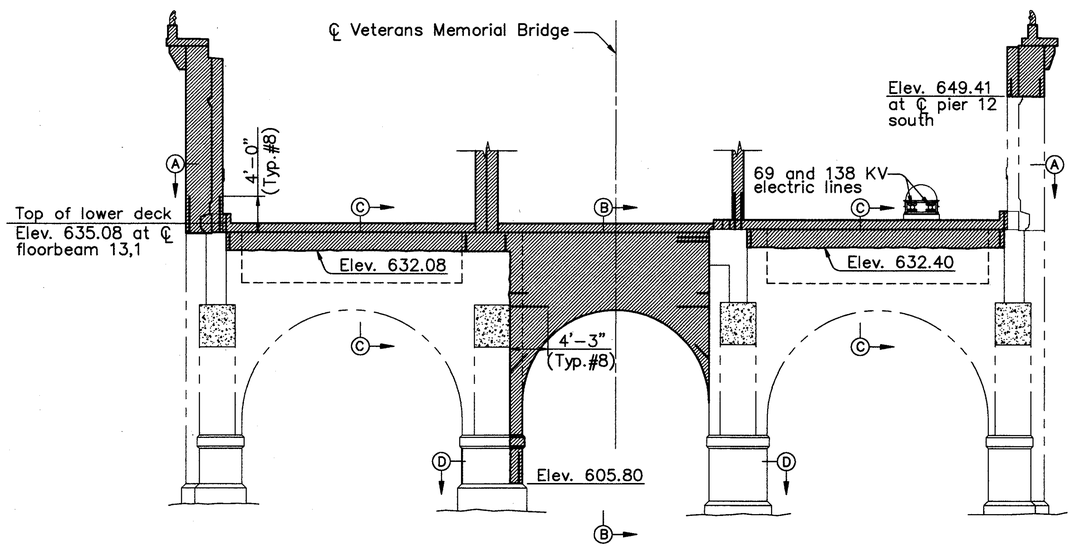

ELEVATION – PIER 12
(Looking east)
(Floorbeams 12,12 and 13,1 not shown)

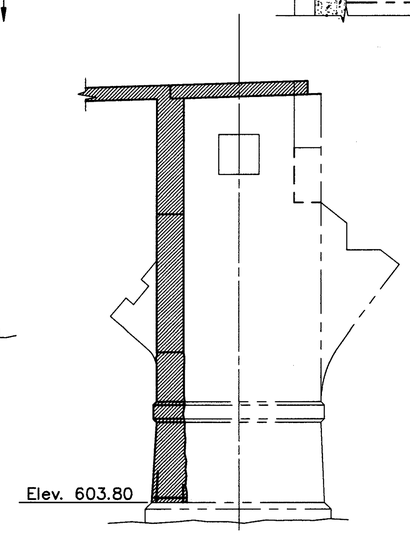

SECTION B–B

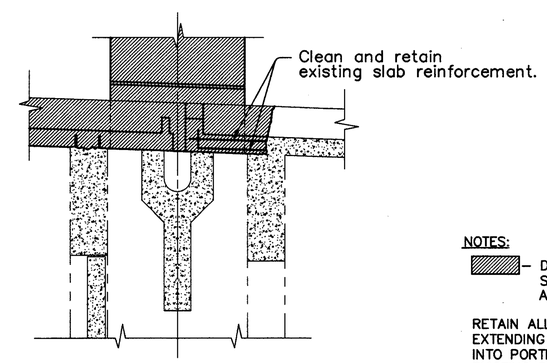

SECTION F–F

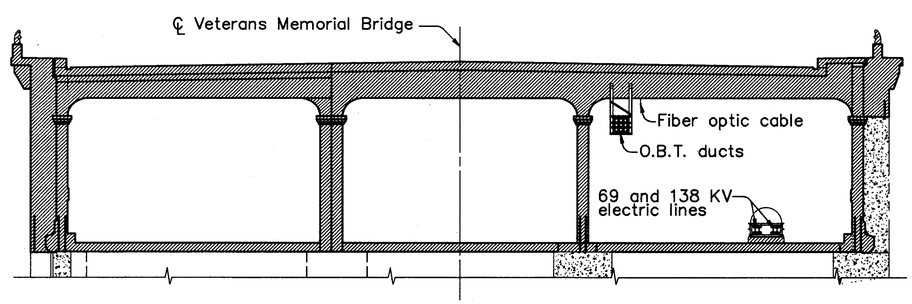

ELEVATION OF FLOORBEAM 13.1
(Looking east)

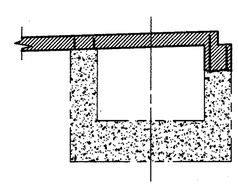

SECTION C–C

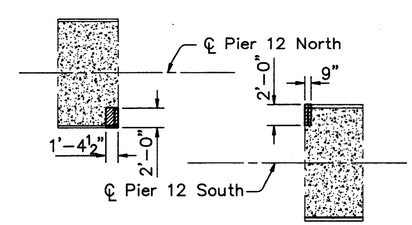

SECTION D–D

NOTES:

– DENOTES PORTIONS OF EXISTING STRUCTURE TO BE REMOVED, EXCLUDING AREAS TO BE REMOVED BY PATCHING.

RETAIN ALL EXISTING REINFORCEMENT EXTENDING FROM EXISTING STRUCTURE INTO PORTIONS OF REBUILT STRUCTURE. EXISTING BARS SHALL BE CUT AT A DISTANCE OF 2'–0" FROM THE REMOVAL LIMIT UNLESS OTHERWISE SPECIFIED.

ALL EXISTING REINFORCEMENT IS NOT SHOWN.

FOR REPLACEMENT DETAILS SEE SHEETS 89/270, 90/270 AND 91/270.

COUNTY BRIDGE NO. 84

HOWARD NEEDLES TAMMEN & BERGENDOFF
ARCHITECTS ENGINEERS PLANNERS
HNTB

REMOVAL DETAILS
PIER 12 AND EAST ABUTMENT
BR. NO. CUY – 6 – 1499
REHABILITATION OF
VETERANS MEMORIAL BRIDGE
(U.S. 6, 20, 42 & S.R. 3 OVER CUYAHOGA RIVER)

CLEVELAND CUYAHOGA COUNTY OHIO

DRAWN B.E.B.	TRACED B.E.B.	CHECKED W.D.D.	REVIEWED C.A.B.	REVISED
DATE 6/19/93	DATE 6/19/93	DATE 3/1/94	DATE 3/31/94	SHEET 60/270

\11646\PIER12

FHWA REGION	STATE	PROJECT	
5	OHIO		

193/412

CUYAHOGA COUNTY
CUY – 6 – 14.99

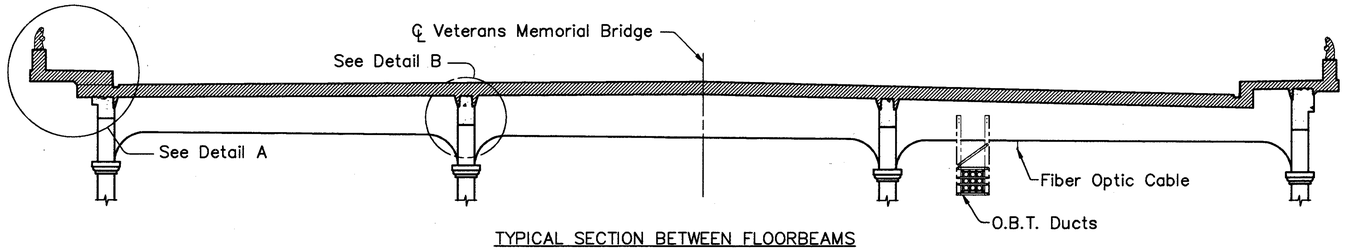

TYPICAL SECTION BETWEEN FLOORBEAMS

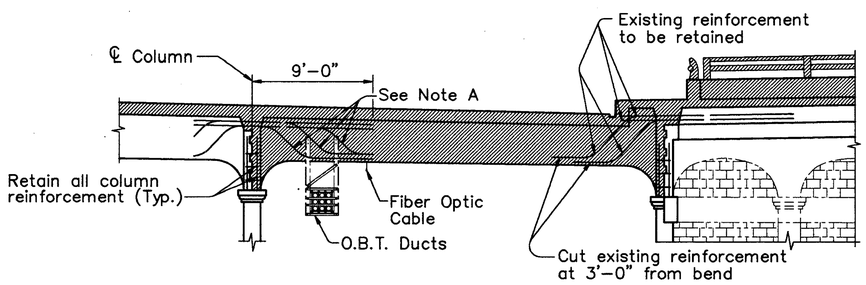

FLOORBEAM 7

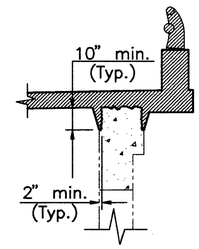

DETAIL C

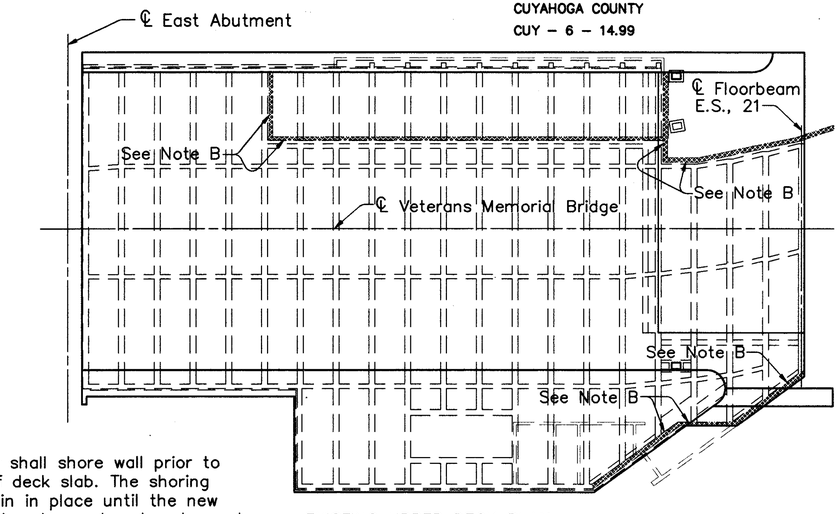

NOTE B:
Contractor shall shore wall prior to removal of deck slab. The shoring shall remain in place until the new deck slab has been placed and cured.

EXISTING UPPER DECK PLAN

For condition between Floorbeams 7 thru 15, See Detail C.
For condition at Floorbeams 15 and 16, See Detail X.
For condition between Floorbeams 15–16, and 16–17, See Detail Y.

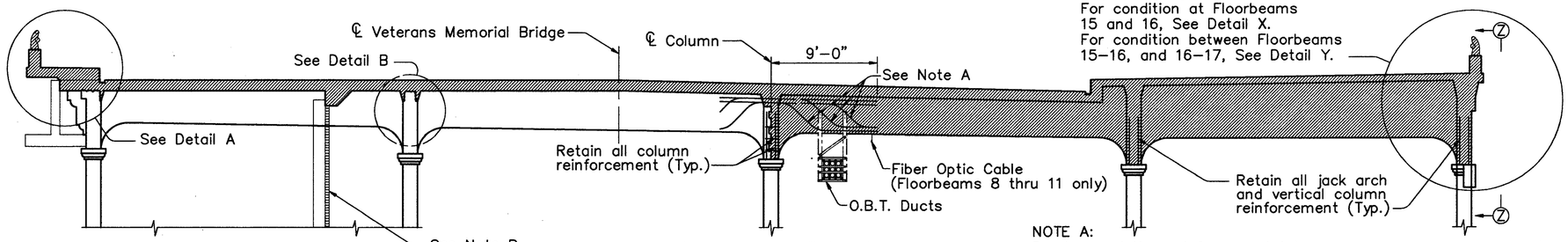

FLOORBEAMS 8 THRU 16
(Floorbeam 9 shown, removal details are similar for other floorbeams)

NOTE A:
Bend up existing reinforcement into respective layers and cut off to the length shown from ℄ column.

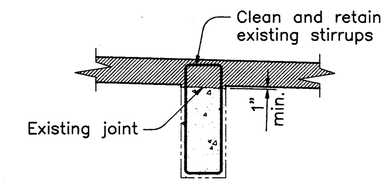

REMOVAL OVER UPPER DECK FLOORBEAM
(Typ.– Except for replaced members)

NOTES:

– DENOTES PORTIONS OF EXISTING STRUCTURE TO BE REMOVED.

– DENOTES PORTIONS OF EXISTING WEARING SURFACE, ROADWAY SLAB, AND CURB TO BE REMOVED AND EXCAVATION AND BACKFILL REQUIRED FOR CONSTRUCTION OF FLOORBEAM. (INCLUDE WITH FLOORBEAM CONCRETE FOR PAYMENT)

FOR DETAILS A AND B, SEE DETAIL "REMOVAL OVER UPPER DECK JACK ARCHES" ON SHEET 48/270.

FOR UTILITY SUPPORT DETAILS, SEE SHEETS 232/270, 233/270 AND 233A/270.

FOR ADDITIONAL REMOVAL DETAILS, SEE SHEETS 50/270, 51/270 AND 62/270.

FOR SECTION Z–Z AT FLOORBEAM 16, SEE SHEET 62/270.

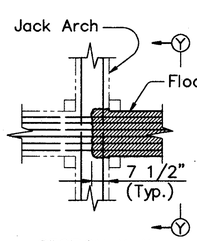

SECTION X–X

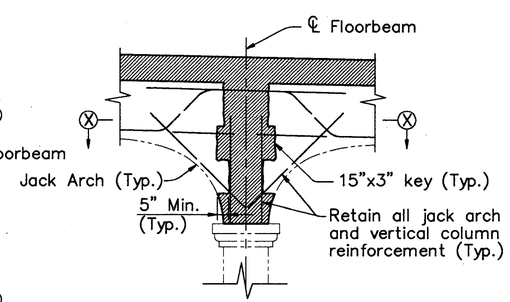

SECTION Y–Y

TYPICAL DETAILS AT EXISTING/NEW FLOORBEAM JOINT

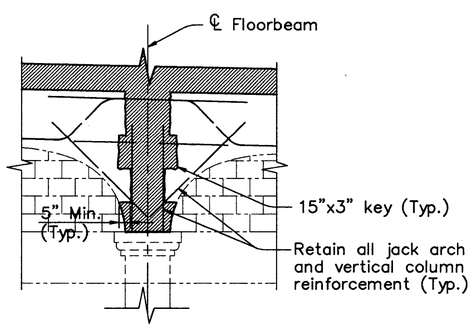

SECTION Z–Z
(Floorbeam 9 shown, Floorbeams 8, and 10 thru 15 similar)

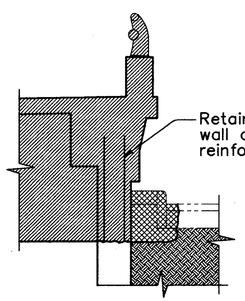

DETAIL X

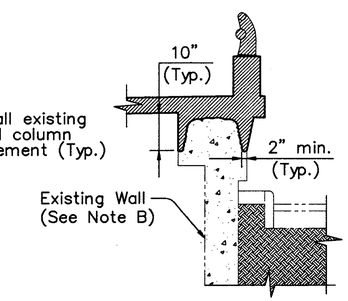

DETAIL Y

COUNTY BRIDGE NO. 84

HOWARD NEEDLES TAMMEN & BERGENDOFF
ARCHITECTS ENGINEERS PLANNERS
HNTB

REMOVAL DETAILS
EAST SIDE STATION
BR. NO. CUY – 6 – 1499
REHABILITATION OF
VETERANS MEMORIAL BRIDGE
(U.S. 6, 20, 42 & S.R. 3 OVER CUYAHOGA RIVER)

CLEVELAND CUYAHOGA COUNTY OHIO

DRAWN A.D.Y.	TRACED A.D.Y.	CHECKED J.L.V.	REVIEWED C.A.B.	REVISED
DATE 2/10/94	DATE 2/10/94	DATE 2/20/94	DATE 3/31/94	SHEET 61/270

\11646\CONCRETE\REMESTA1.DWG

FHWA REGION	STATE	PROJECT	
5	OHIO		

194 / 412

CUYAHOGA COUNTY
CUY – 6 – 14.99

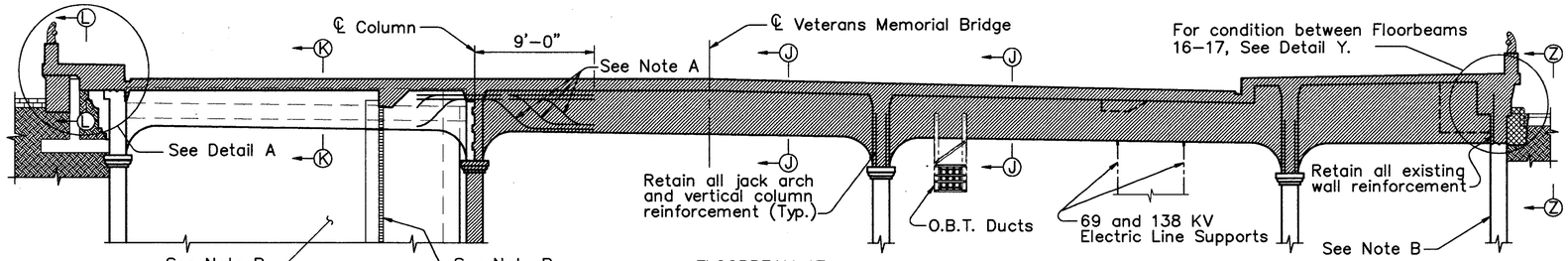

FLOORBEAM 17
(Slab key not shown, see Sections J–J and K–K)

NOTE A:
Bend up existing reinforcement into respective layers and cut off to the length shown from ℄ column.

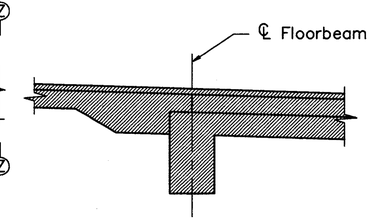

SECTION J–J

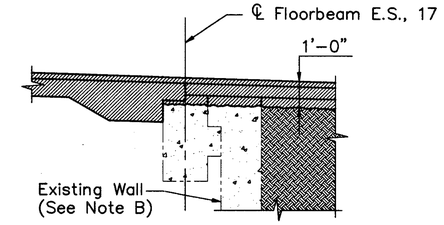

SECTION K–K

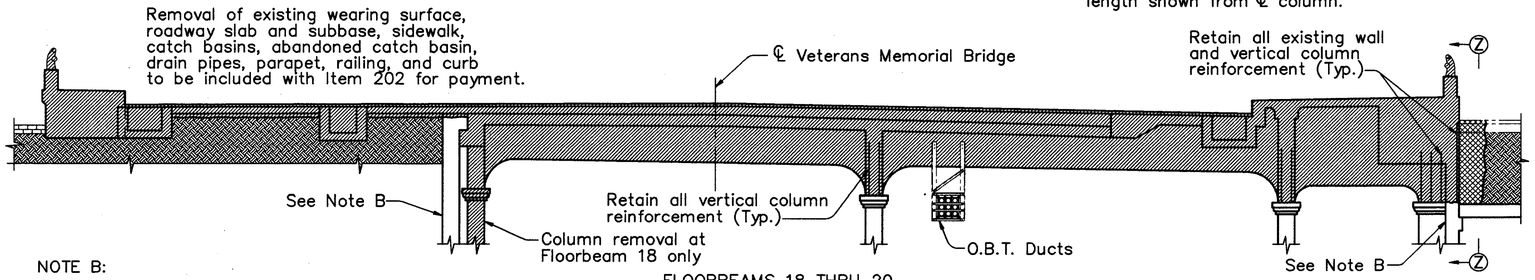

NOTE B:
Contractor shall shore wall prior to removal of deck slab. The shoring shall remain in place until the new deck slab has been placed and cured.

FLOORBEAMS 18 THRU 20
(Floorbeam 18 shown, removal details are similar for other floorbeams, except as shown in details below)

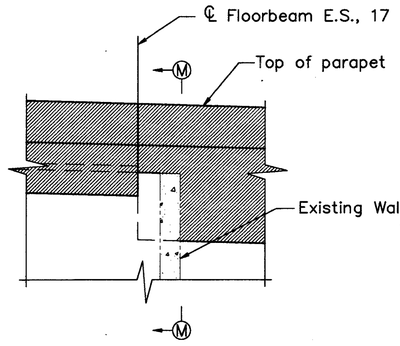

SECTION L–L
(Railing not shown)

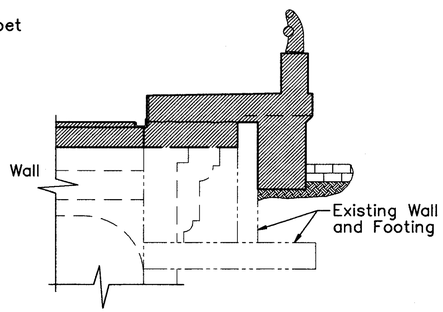

SECTION M–M

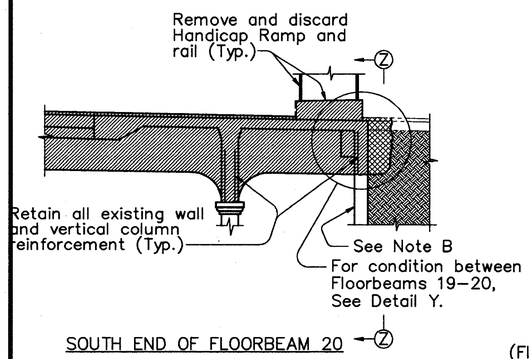

SOUTH END OF FLOORBEAM 20

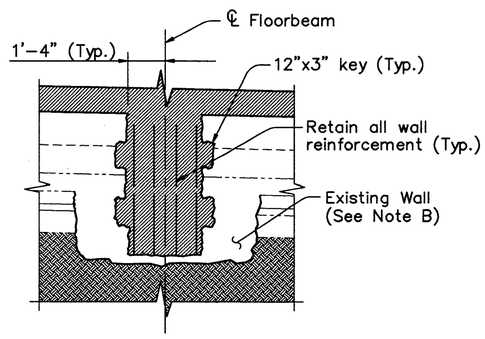

SECTION Z–Z
(Floorbeam 16 shown, Floorbeams 17 thru 20 similar)
(Parapet and railing not shown)

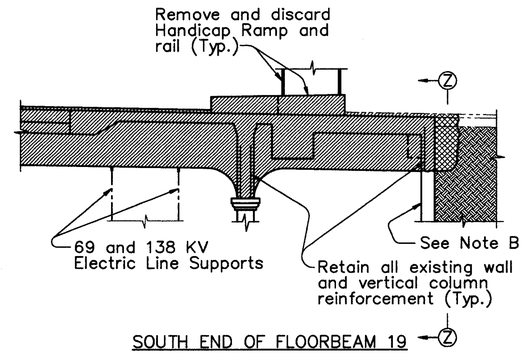

SOUTH END OF FLOORBEAM 19

NOTES:

▨ – DENOTES PORTIONS OF EXISTING STRUCTURE TO BE REMOVED.

▩ – DENOTES PORTIONS OF EXISTING WEARING SURFACE, ROADWAY SLAB, AND CURB TO BE REMOVED AND EXCAVATION AND BACKFILL REQUIRED FOR CONSTRUCTION OF FLOORBEAM. (INCLUDE WITH FLOORBEAM CONCRETE FOR PAYMENT)

FOR DETAIL A, SEE DETAIL "REMOVAL OVER UPPER DECK JACK ARCHES" ON SHEET 48 / 270.

FOR UTILITY SUPPORT DETAILS, SEE SHEETS 232 / 270, 233 / 270 AND 233A / 270.

FOR ADDITIONAL REMOVAL DETAILS, SEE SHEETS 50 / 270, 51 / 270 AND 61 / 270.

FOR DETAIL Y, SEE SHEET 61 / 270.

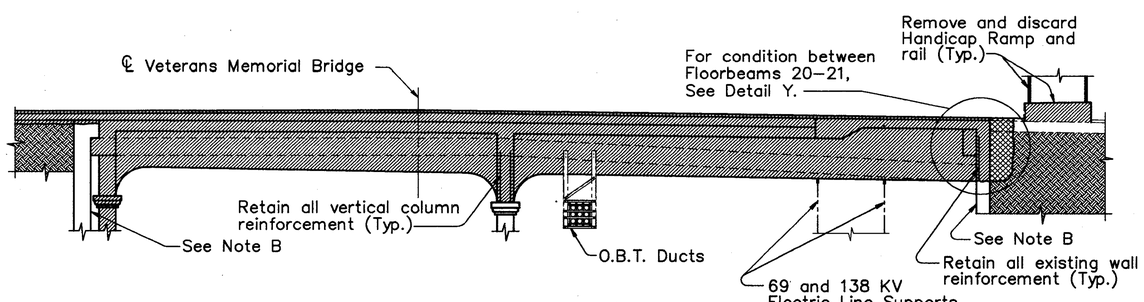

FLOORBEAM 21

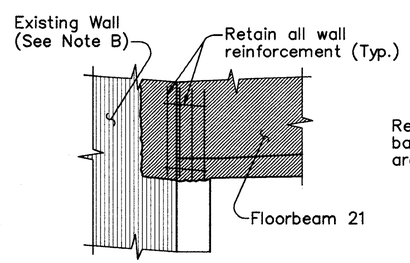

DETAIL OF BEAM 21 AT SOUTH WALL
(Looking West)

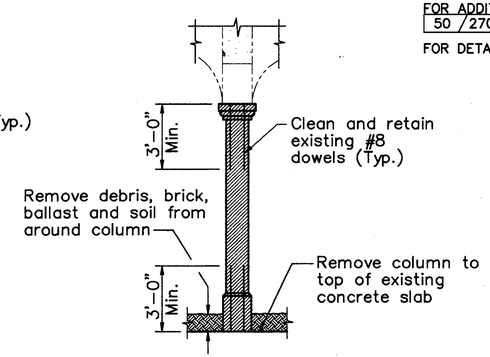

COLUMN REMOVAL DETAIL
(Column 21 N.I. similar)

COUNTY BRIDGE NO. 84

HOWARD NEEDLES TAMMEN & BERGENDOFF
ARCHITECTS ENGINEERS PLANNERS
HNTB

REMOVAL DETAILS
EAST SIDE STATION
BR. NO. CUY – 6 – 1499
REHABILITATION OF
VETERANS MEMORIAL BRIDGE
(U.S. 6, 20, 42 & S.R. 3 OVER CUYAHOGA RIVER)

CLEVELAND CUYAHOGA COUNTY OHIO

DRAWN A.D.Y.	TRACED A.D.Y.	CHECKED J.L.V.	REVIEWED C.A.B.	REVISED
DATE 2/10/94	DATE 2/10/94	DATE 2/20/94	DATE 3/31/94	SHEET 62 / 270

\11646\CONCRETE\REMESTA2.DWG

FHWA REGION	STATE	PROJECT	
5	OHIO		

195/412

CUYAHOGA COUNTY
CUY – 6 – 14.99

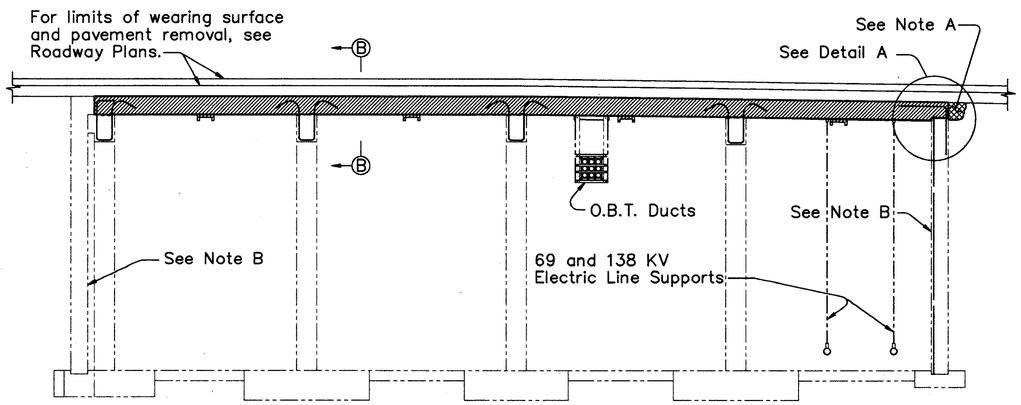

TYPICAL SECTION
EAST SIDE SUBWAY

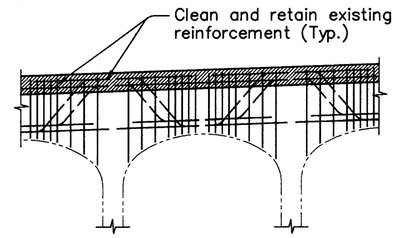

SECTION B–B
(Existing pavement not shown)

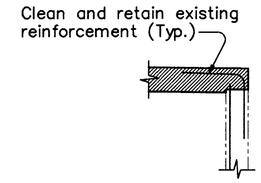

DETAIL A
(Existing pavement not shown)

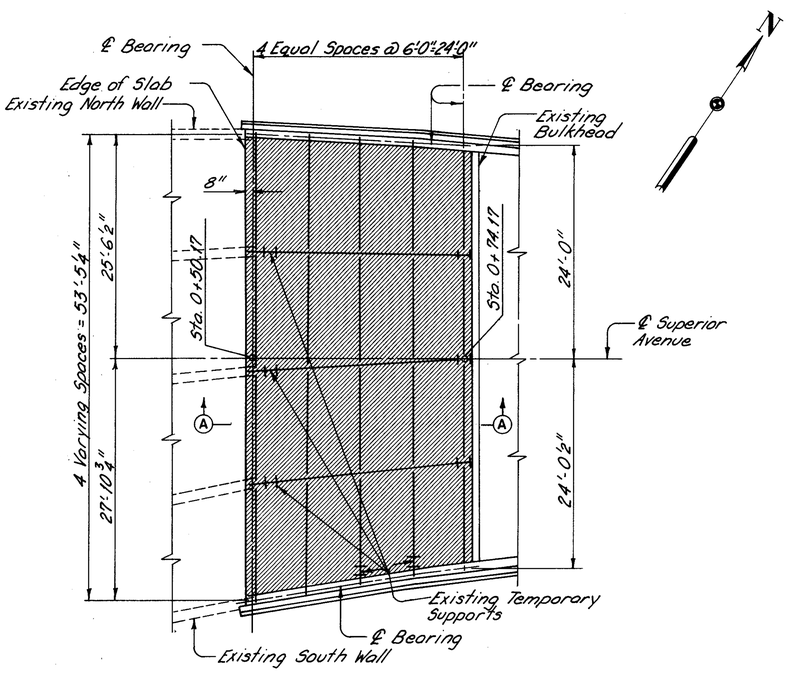

PLAN

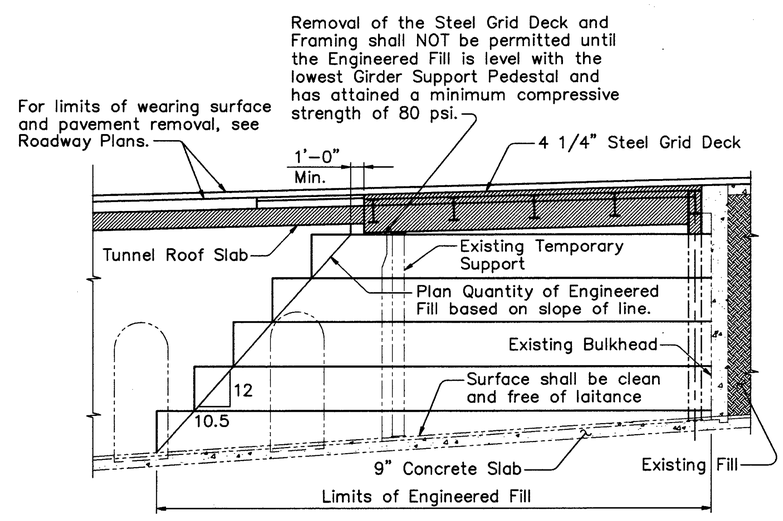

SECTION A–A

NOTE A:

EXCAVATE AND BACKFILL AS REQUIRED FOR CONSTRUCTION AND WATERPROOFING OF DECK SLAB.
(INCLUDE WITH ITEM 511 FOR PAYMENT)

NOTE B:

CONTRACTOR SHALL SHORE WALL PRIOR TO REMOVAL OF DECK SLAB. THE SHORING SHALL REMAIN IN PLACE UNTIL THE NEW DECK SLAB HAS BEEN PLACED AND CURED.

NOTES:

▨ – DENOTES PORTIONS OF EXISTING STRUCTURE TO BE REMOVED.
FOR REPLACEMENT DETAILS, SEE SHEET 211/270.
FOR UTILITY SUPPORT DETAILS, SEE SHEETS 232/270, 233/270 AND 233A/270.
RETAIN ALL EXISTING REINFORCEMENT EXTENDING FROM EXISTING STRUCTURE INTO PORTIONS OF REBUILT STRUCTURE.

COUNTY BRIDGE NO. 84

HOWARD NEEDLES TAMMEN & BERGENDOFF
ARCHITECTS ENGINEERS PLANNERS
HNTB

REMOVAL DETAILS
EAST SIDE SUBWAY
BR. NO. CUY – 6 – 1499
REHABILITATION OF
VETERANS MEMORIAL BRIDGE
(U.S. 6, 20, 42 & S.R. 3 OVER CUYAHOGA RIVER)

CLEVELAND CUYAHOGA COUNTY OHIO

DRAWN	TRACED	CHECKED	REVIEWED	REVISED
ADY	ADY	JLV	CAB	
DATE 02/28/93	DATE 02/28/93	DATE 03/31/94	DATE 04/04/94	SHEET 63/270

\11646\CONCRETE\REMSUB

FHWA REGION	STATE	PROJECT	
5	OHIO		

196/412

CUYAHOGA COUNTY
CUY – 6 – 14.99

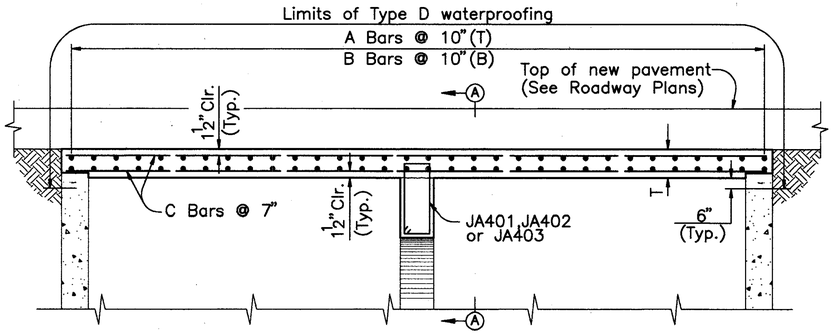

TYPICAL SECTION AT ROOF SLAB REPLACEMENT

TOP SLAB REINFORCEMENT WEST 25TH STREET TUNNEL							
LOCATION	T	SLAB SOUTH OF JOINT			SLAB NORTH OF JOINT		
		A BARS	B BARS	C BARS	A BARS	B BARS	C BARS
CLOSURE WALL	1'–1"	–	–	–	32–TS403	32–TS503	9–TS601
11–12	1'–1"	32–TS404	32–TS504	11–TS601	32–TS402	32–TS502	7–TS601
12–13	1'–1"	32–TS402	32–TS502	7–TS601	32–TS402	32–TS502	7–TS601
13–14	1'–1"	32–TS403	32–TS503	9–TS601	32–TS403	32–TS503	9–TS601
14–15	1'–1"	32–TS403	32–TS503	9–TS601	32–TS403	32–TS503	9–TS601
15–16	1'–1"	33–TS402	33–TS502	7–TS602	33–TS403	33–TS503	9–TS602
16–17	1'–3"	35–TS406	35–TS506	14–TS603	35–TS402	35–TS502	7–TS603
17–STA	1'–7½"	SEE DETAIL			SEE DETAIL		

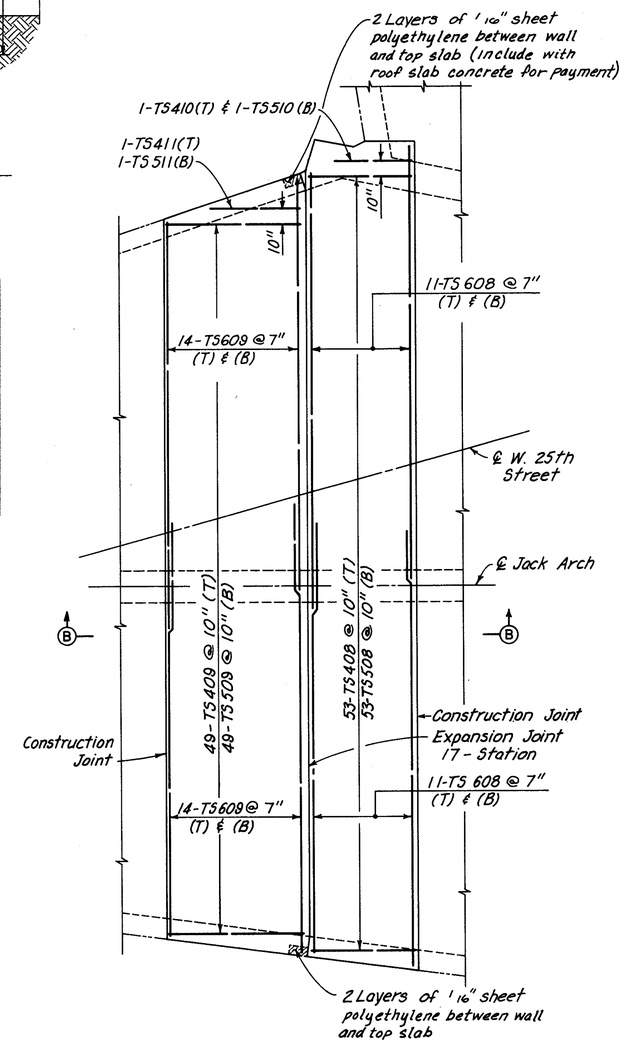

PLAN

PANEL 17 TO STATION

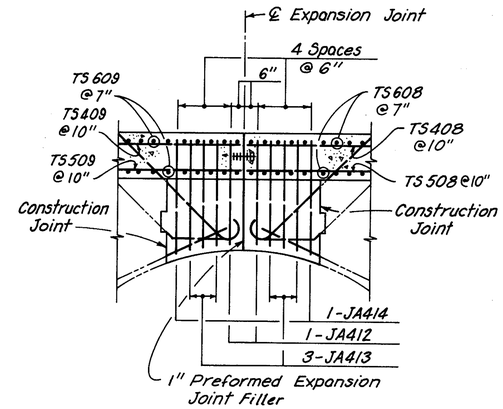

PART SECTION B-B
(Waterproofing similar as Section A-A)

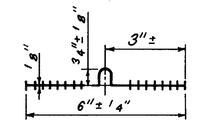

WATERSTOP DETAIL

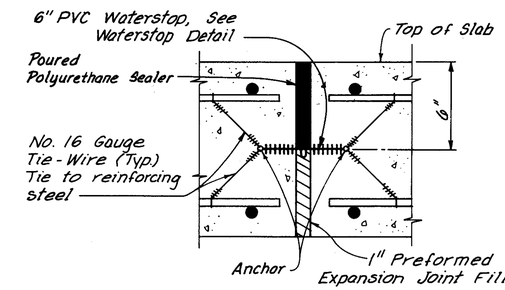

SECTION THRU TOP SLAB EXPANSION JOINT

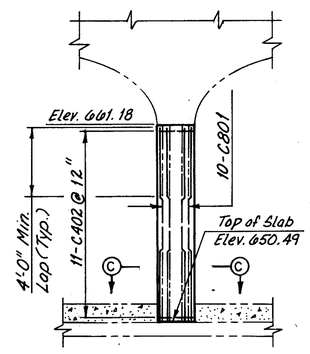

COLUMN T, 17, 35 REPLACEMENT

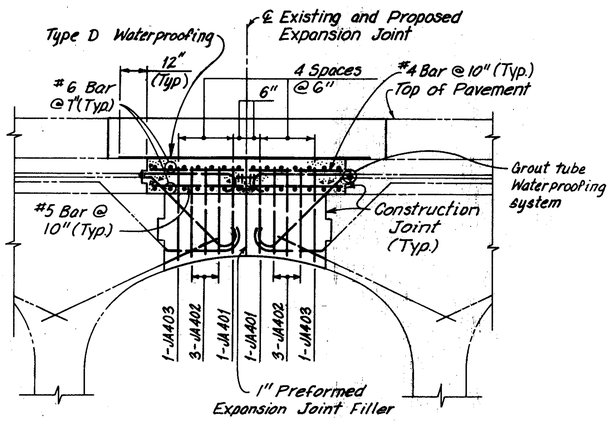

SECTION A-A
(Joint 12-13 shown, other locations similar)

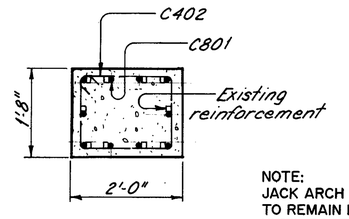

SECTION C-C

NOTE:
JACK ARCH FORMWORK TO REMAIN IN PLACE UNTIL ROOF SLAB CONCRETE HAS BEEN PLACED AND CURED.

ALL REINFORCING BAR MARKS SHALL BE PREFIXED WT

NOTES:
FOR REMOVAL DETAILS SEE SHEET 42 / 270.

FOR COLUMN BASE REPAIR DETAILS SEE SHEET 65 / 270.

THE PVC WATERSTOPS, PREFORMED EXPANSION JOINT FILLER, JOINT SEALER AND GROUT TUBES SHALL BE INCLUDED WITH ITEM 511 FOR PAYMENT.

FOR THE FIRST POUR, THE WATERSTOP SHALL BE HELD SECURLEY IN PLACE BY THE USE OF SPLIT FORMS AND TIE WIRES. FOR THE SECOND POUR, SECURE THE FREE END OF THE WATERSTOP IN THE PROPER POSITION WITH TIE WIRES. ALTERNATE METHODS, AS APPROVED BY THE ENGINEER, MAY BE USED TO ENSURE THE CORRECT POSITIONING OF THE WATERSTOP.

THE FOLLOWING ABBREVIATIONS ARE USED:

(T) – TOP
(B) – BOTTOM

COUNTY BRIDGE NO. 84

HOWARD NEEDLES TAMMEN & BERGENDOFF
ARCHITECTS ENGINEERS PLANNERS
HNTB

REPLACEMENT DETAILS
WEST 25TH STREET TUNNEL
BR. NO. CUY – 6 – 1499
REHABILITATION OF
VETERANS MEMORIAL BRIDGE
(U.S. 6, 20, 42 & S.R. 3 OVER CUYAHOGA RIVER)

CLEVELAND CUYAHOGA COUNTY OHIO

DRAWN W.J.V.	TRACED G.C.A.	CHECKED C.K.B.	REVIEWED C.A.B.	REVISED 8/19/91
DATE 5/21/90	DATE 5/28/90	DATE 7/28/90	DATE 4/5/94	SHEET 64 / 270

\11646\W25T.DWG

FHWA REGION	STATE	PROJECT	
5	OHIO		

197 / 412

CUYAHOGA COUNTY
CUY – 6 – 14.99

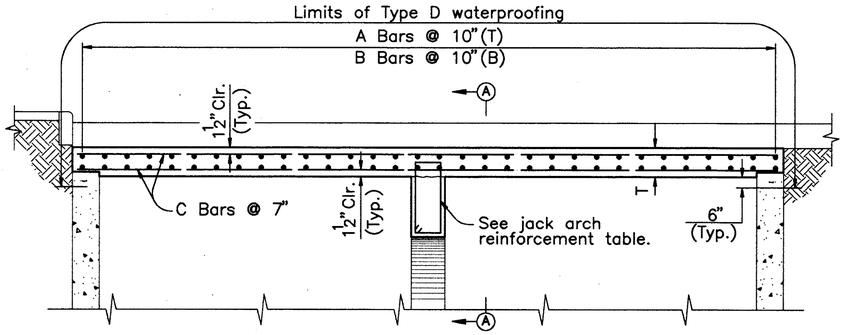

TYPICAL SECTION AT ROOF SLAB REPLACEMENT
(69 and 138 KV electric lines not shown)

TOP SLAB REINFORCEMENT DETROIT AVENUE TUNNEL							
LOCATION	T	SLAB WEST OF JOINT			SLAB EAST OF JOINT		
		A BARS	B BARS	C BARS	A BARS	B BARS	C BARS
CLOSURE WALL	1'–3"	–	–	–	37–TS402	37–TS502	7–TS607
1–2	1'–3"	37–TS401	37–TS501	5–TS606	37–TS406	37–TS506	14–TS606
2–3	1'–3"	36–TS401	36–TS501	5–TS605	36–TS401	36–TS501	5–TS605
3–4	1'–3"	35–TS402	35–TS502	7–TS604	35–TS402	35–TS502	7–TS604
4–5	1'–1"	33–TS402	33–TS502	7–TS602	33–TS401	33–TS501	5–TS602
5–6	1'–1"	32–TS403	32–TS503	9–TS601	32–TS403	32–TS503	9–TS601
6–7	1'–1"	32–TS402	32–TS502	7–TS601	32–TS405	32–TS505	12–TS601
7–8	1'–1"	32–TS412	32–TS512	11–TS601	32–TS413	32–TS513	18–TS601
8–9	1'–1"	32–TS407	32–TS507	16–TS601	32–TS407	32–TS507	16–TS601
9–10	1'–1"	32–TS402	32–TS502	7–TS601	32–TS402	32–TS502	7–TS601
10–STA	1'–1"	32–TS405	32–TS505	12–TS601	**		

**For reinforcement details see sheet 67 / 270.

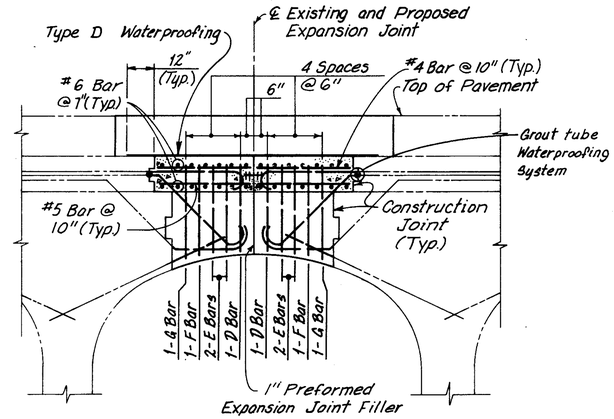

SECTION A-A
(Joint 3-4 Shown, Other locations similar)

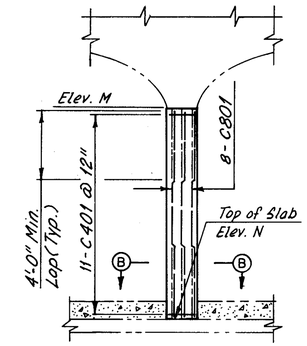

COLUMN REPLACEMENT DETAILS

COLUMN	ELEV. M	ELEV. N
T,8,39	661.85	651.11
T,10,48	661.25	650.46

JACK ARCH REINFORCEMENT DETROIT AVENUE TUNNEL				
LOCATION	D BARS	E BARS	F BARS	G BARS
CLOSURE WALL	–	–	–	–
1–2	JA408	JA409	JA410	JA411
2–3	JA404	JA405	JA405	JA407
3–4	JA404	JA405	JA405	JA407
4–5	JA404	JA405	JA406	JA407
5–6	JA404	JA405	JA406	JA407
6–7	JA404	JA405	JA406	JA407
7–8	JA404	JA405	JA406	JA407
8–9	JA404	JA405	JA406	JA407
9–10	JA404	JA405	JA406	JA407
10–STA	JA404	JA405	JA406	JA407

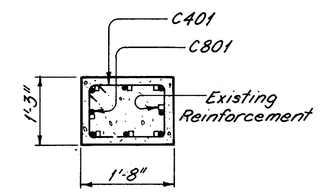

SECTION B-B

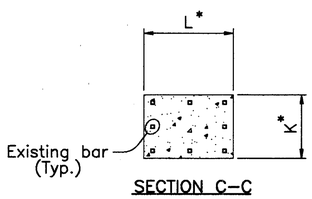

SECTION C–C

*Note:
Tabulated values for dimensions K and L are based on original plan dimensions. These values shall be adjusted as required in the repaired section to provide 2" clearance to the new stirrup bars, as shown.

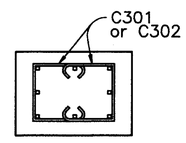

SECTION D–D

NOTE:
JACK ARCH FORMWORK TO REMAIN IN PLACE UNTIL ROOF SLAB CONCRETE HAS BEEN PLACED AND CURED.

ALL REINFORCING BAR MARKS SHALL BE PREFIXED DT, EXCEPT FOR W.25TH STREET TUNNEL COLUMN BASE BARS

NOTES:
FOR UTILITY SUPPORT DETAILS SEE SHEET 233 / 270 .

FOR REMOVAL DETAILS SEE SHEET 42 / 270.

REINFORCING BAR NUMBERS WTC301 AND WTC302 SHALL NOT BE FABRICATED UNTIL THE OUT TO OUT DIMENSIONS OF THE EXISTING VERTICAL COLUMN BARS HAVE BEEN FIELD VERIFIED.

THE PVC WATERSTOPS, PREFORMED EXPANSION JOINT FILLER, JOINT SEALER AND GROUT TUBES SHALL BE INCLUDED WITH ITEM 511 FOR PAYMENT.
FOR WATERSTOP DETAILS SEE SHEET 64 / 270.

THE FOLLOWING ABBREVIATIONS ARE USED:

(T) – TOP
(B) – BOTTOM

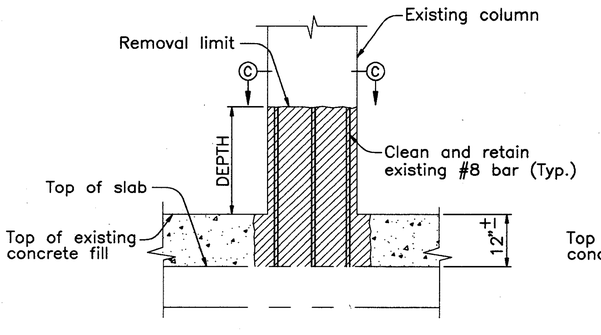

REMOVAL

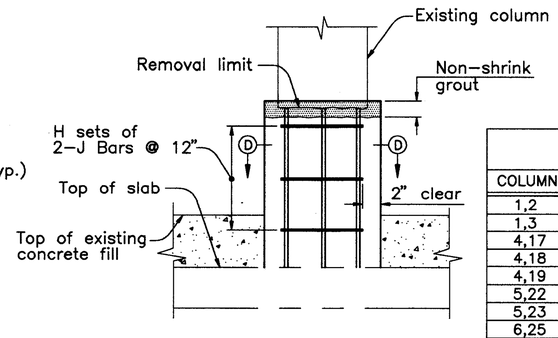

REPAIR

COLUMN BASE REPAIR DETAIL
WEST 25TH STREET AND DETROIT AVENUE TUNNELS

COLUMN BASE REPAIRS DETROIT AVENUE TUNNEL					
COLUMN	DEPTH	H	J BARS	K*	L*
1,2	2'–0"	3	C302	1'–5"	1'–10"
1,3	2'–0"	3	C302	1'–5"	1'–10"
4,17	2'–0"	3	C301	1'–3"	1'–8"
4,18	3'–0"	4	C301	1'–3"	1'–8"
4,19	3'–0"	4	C301	1'–3"	1'–8"
5,22	3'–0"	4	C301	1'–3"	1'–8"
5,23	2'–0"	3	C301	1'–3"	1'–8"
6,25	3'–0"	4	C301	1'–3"	1'–8"
6,26	3'–0"	4	C301	1'–3"	1'–8"
6,29	2'–0"	3	C301	1'–3"	1'–8"
7,30	3'–0"	4	C301	1'–3"	1'–8"
7,31	2'–0"	3	C301	1'–3"	1'–8"
7,33	3'–0"	4	C301	1'–3"	1'–8"
8,35	3'–0"	4	C301	1'–3"	1'–8"

COLUMN BASE REPAIRS WEST 25TH STREET TUNNEL					
COLUMN	DEPTH	H	J BARS	K*	L*
12,6	3'–0"	4	WTC301	1'–3"	1'–8"
13,11	4'–0"	5	WTC301	1'–3"	1'–8"
13,13	2'–0"	3	WTC301	1'–3"	1'–8"
14,16	3'–0"	4	WTC301	1'–3"	1'–8"
15,21	2'–0"	3	WTC301	1'–3"	1'–8"
15,22	2'–0"	3	WTC301	1'–3"	1'–8"
15,23	2'–0"	3	WTC301	1'–3"	1'–8"
15,24	2'–0"	3	WTC301	1'–3"	1'–8"
15,25	3'–0"	4	WTC301	1'–3"	1'–8"
16,26	2'–0"	3	WTC301	1'–3"	1'–8"
16,27	3'–0"	4	WTC301	1'–3"	1'–8"
16,28	3'–0"	4	WTC301	1'–3"	1'–8"
16,29	3'–0"	4	WTC301	1'–3"	1'–8"
16,30	3'–0"	4	WTC301	1'–3"	1'–8"

COUNTY BRIDGE NO. 84

HOWARD NEEDLES TAMMEN & BERGENDOFF
ARCHITECTS ENGINEERS PLANNERS
HNTB

REPLACEMENT DETAILS
DETROIT AVENUE TUNNEL
BR. NO. CUY – 6 – 1499
REHABILITATION OF
VETERANS MEMORIAL BRIDGE
(U.S. 6, 20, 42 & S.R. 3 OVER CUYAHOGA RIVER)
CLEVELAND CUYAHOGA COUNTY OHIO

DRAWN W.J.V.	TRACED G.C.A.	CHECKED C.K.B.	REVIEWED C.A.B.	REVISED 8/13/91
DATE 5/21/90	DATE 5/28/90	DATE 7/28/90	DATE 4/5/94	SHEET 65 / 270

\11646\DT.DWG

FHWA REGION	STATE	PROJECT	
5	OHIO		

198/412

CUYAHOGA COUNTY
CUY – 6 – 14.99

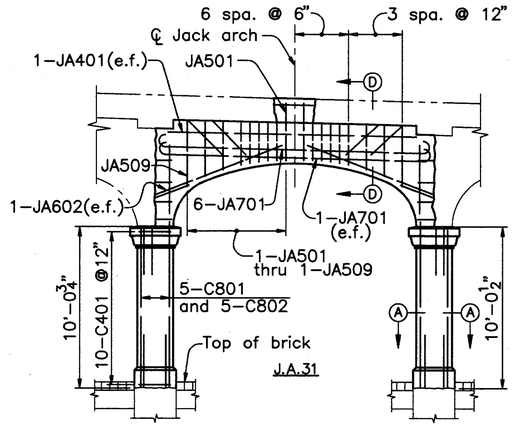

COLUMNS 8.E AND 9.E AND JACK ARCH 8–9.E REPLACEMENT DETAIL

(Sidewalk not shown)

Note: All reinforcement and spacings are symmetrical about ℄ jack arch.

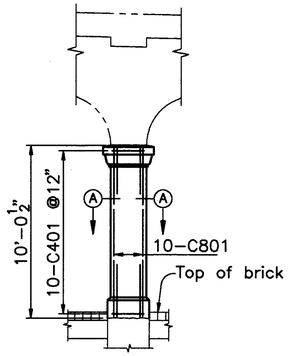

COLUMN 10.D REPLACEMENT DETAIL

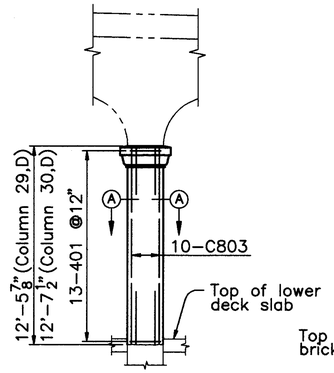

COLUMNS 29.D AND 30.D REPLACEMENT DETAIL

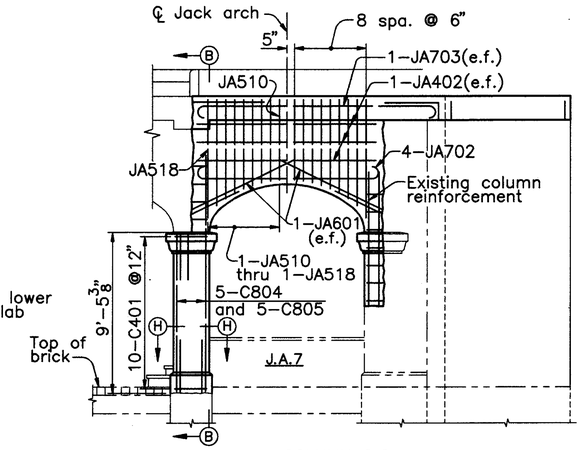

COLUMN 2.C AND JACK ARCH 1–2.C REPLACEMENT DETAIL

(Looking south)

Note: Stirrup barmarks and spacing are symmetrical about ℄ jack arch.

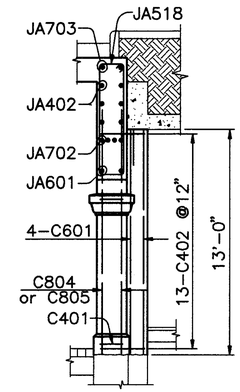

SECTION B–B

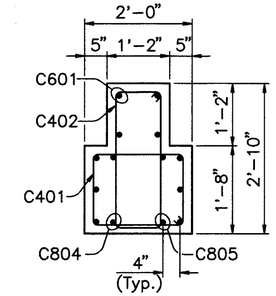

SECTION H–H

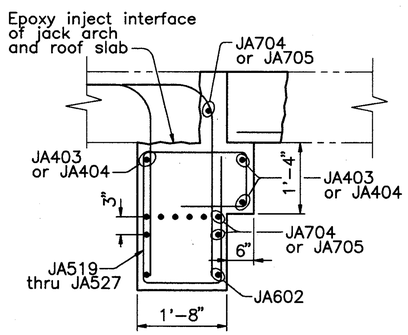

SECTION E–E

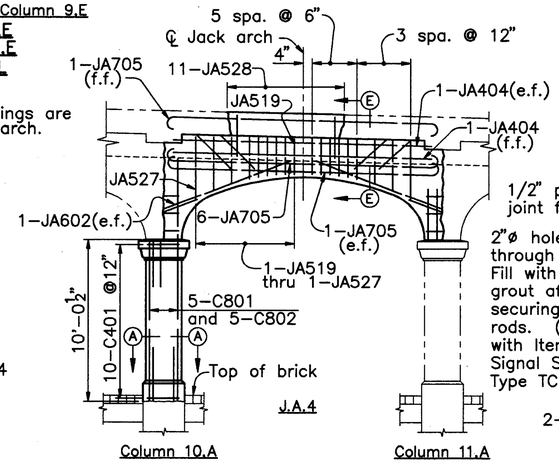

COLUMN 10.A AND JACK ARCH 10–11.A REPLACEMENT DETAIL

Note: *(Roadway pavement not shown)*
Stirrup barmarks and spacing are symmetrical about ℄ jack arch.

30" x 30" removal to top of roof slab, to be filled with Class C concrete after anchor rods are in place. (Include with Item 202 for payment)

1/2" preformed joint filler (Typ.)

2"ø holes drilled through roof. Fill with cement grout after securing anchor rods. (Include with Item 632, Signal Support, Type TC–81–20)

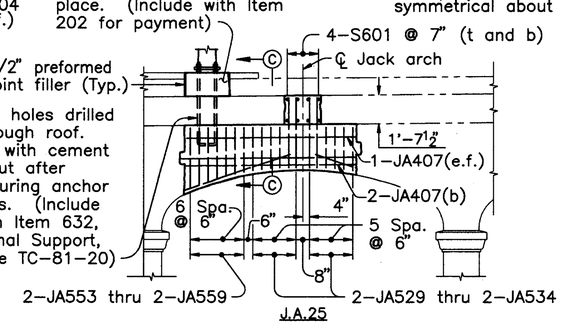

ROOF SLAB AND JACK ARCH 2–3.G REPLACEMENT DETAIL

Note: For bolt circle and anchor rod details, see ODOT Standard Drawing TC–21.20.

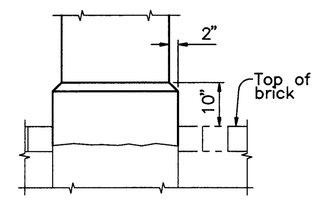

COLUMN BASE DETAIL

(Dimensions are typical on four faces of column)

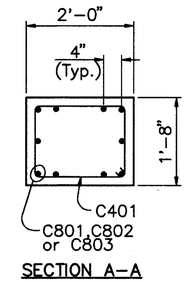

SECTION A–A

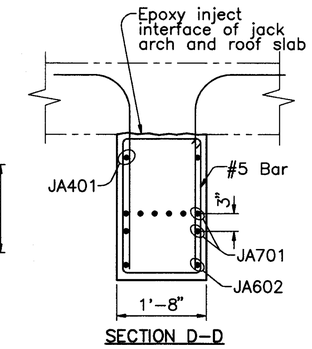

SECTION D–D

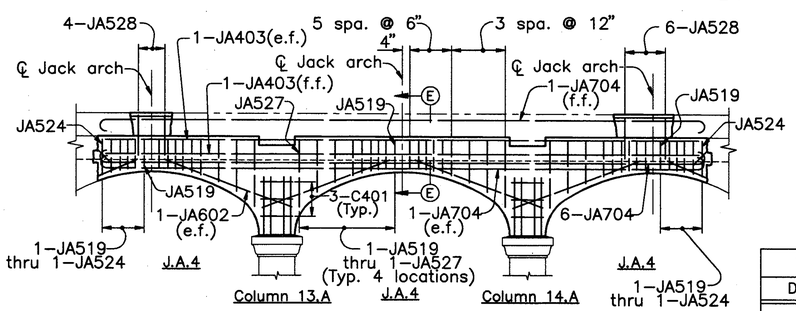

JACK ARCHES 12–13.A; 13–14.A AND 14–15.A REPLACEMENT DETAIL

Note: *(Roadway pavement not shown)*
Stirrup spacing is symmetrical about ℄ jack arches.

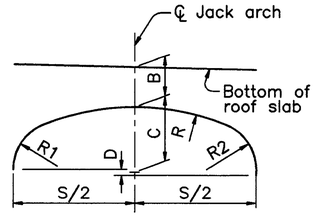

JACK ARCH DETAIL

TABLE OF JACK ARCH DIMENSIONS				
DIM.	J.A.4	J.A.7	J.A.31	J.A.25
S	12'–0"	8'–8"	12'–4¾"	15'–9"
B	2'–0"	3'–6¼"	2'–0"	2'–7½"
C	3'–7½"	2'–8⅜"	3'–7½"	3'–4½"
D	0'–½"	0'–0"	0'–¾"	0'–0"
R	8'–7"	5'–9"	12'–6"	16'–9½"
R1	2'–5⅞"	1'–9⅝"	3'–0½"	2'–0⅝"
R2	2'–6⅞"	1'–9⅝"	3'–1½"	2'–0⅝"

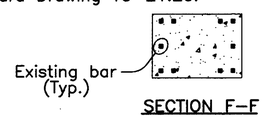

SECTION F–F

COLUMN BASE REPAIRS WEST SIDE STATION		
COLUMN	DEPTH	A
30,A	3'–0"	4
29,C	3'–0"	4
30,C	3'–0"	4
31,C	4'–0"	5
31,D	3'–0"	4

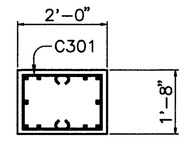

SECTION G–G

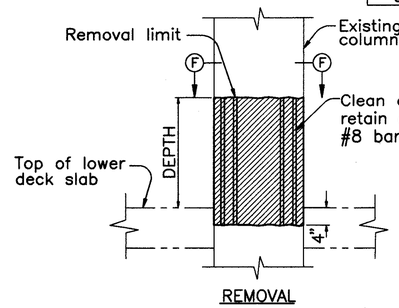

REMOVAL

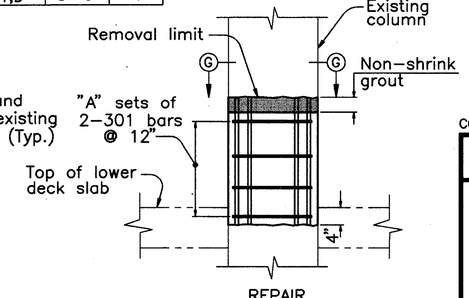

REPAIR

COLUMN BASE REPAIR DETAIL
WEST SIDE STATION

ALL REINFORCING BAR MARKS SHALL BE PREFIXED WS

NOTES:

FOR REMOVAL DETAILS SEE SHEET 44/270.

FOR SECTION C–C SEE SHEET 67/270.

FOR ADDITIONAL COLUMN AND JACK ARCH REPLACEMENT DETAILS SEE SHEETS 67/270 AND 70/270.

FOR COLUMN CAP DIMENSIONS SEE SHEET 70/270.

THE FOLLOWING ABBREVIATIONS ARE USED:

(f.f.) – FAR FACE
(n.f.) – NEAR FACE
(e.f.) – EACH FACE

COUNTY BRIDGE NO. 84

HOWARD NEEDLES TAMMEN & BERGENDOFF
ARCHITECTS ENGINEERS PLANNERS
HNTB

COLUMN AND JACK ARCH DETAILS
WEST SIDE STATION
BR. NO. CUY – 6 – 1499
REHABILITATION OF
VETERANS MEMORIAL BRIDGE
(U.S. 6, 20, 42 & S.R. 3 OVER CUYAHOGA RIVER)
CLEVELAND CUYAHOGA COUNTY OHIO

DRAWN B.E.B.	TRACED B.E.B.	CHECKED R.S.Y.	REVIEWED C.A.B.	REVISED
DATE 3/15/94	DATE 3/15/94	DATE 3/20/94	DATE 3/31/94	SHEET 66/270

\11646\WSCOL.DWG

FHWA REGION	STATE	PROJECT	
5	OHIO		

199 / 412

CUYAHOGA COUNTY
CUY – 6 – 14.99

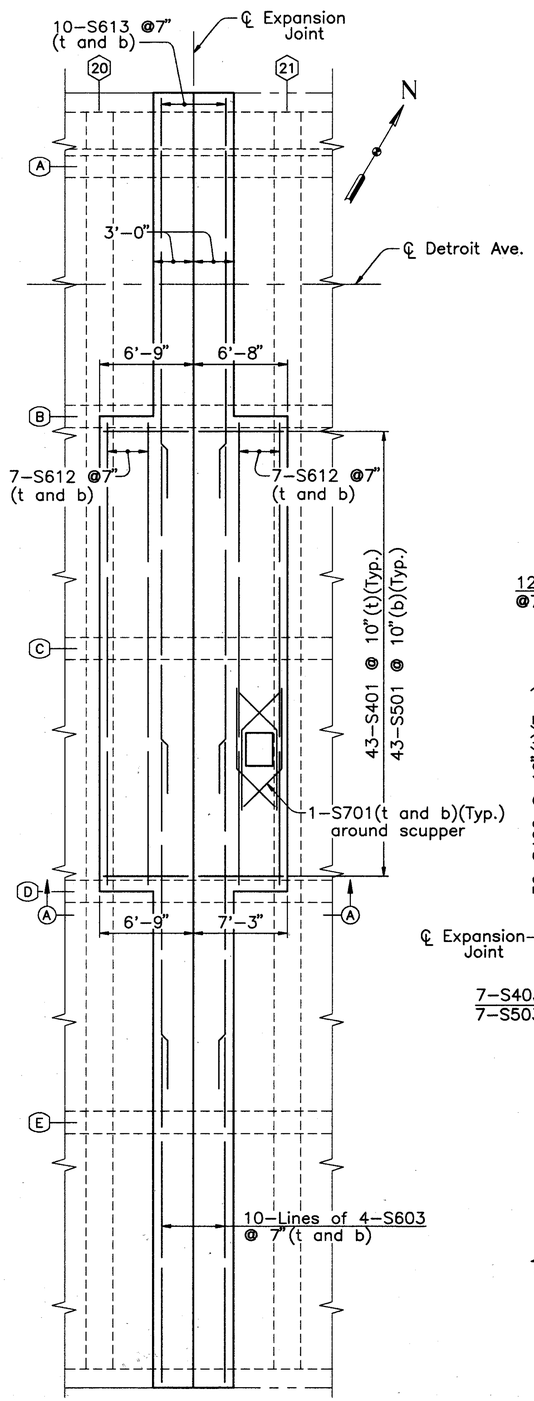

ROOF SLAB PLAN – PANEL 20–21

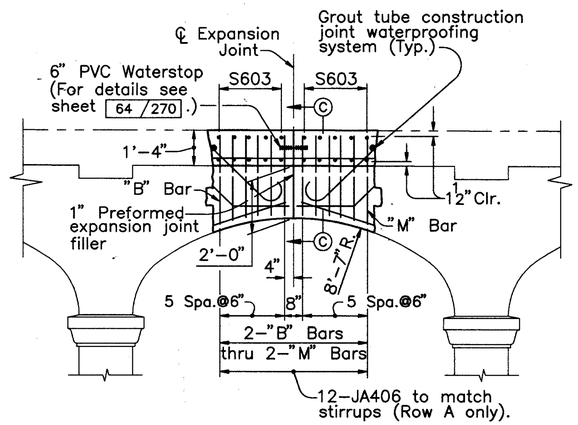

SECTION A–A
(Roadway pavement not shown))

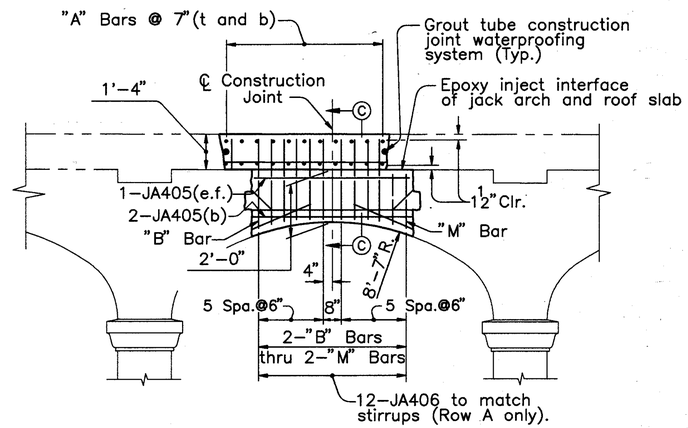

ROOF SLAB AND JACK ARCH REPLACEMENT DETAIL AT CONSTRUCTION JOINTS
(Joint 10–11 shown, others similar)
(Looking north, roadway pavement not shown))

JACK ARCH REINFORCEMENT						
BAR	JOINT					
	8–9	10–11	12–13	14–15	18–19	20–21
B	JA535	JA541	JA535	JA535	JA524	JA541
C	JA536	JA542	JA536	JA536	JA523	JA542
D	JA537	JA543	JA537	JA543	JA522	JA543
E	JA538	JA544	JA538	JA544	JA521	JA544
F	JA539	JA539	JA539	JA539	JA520	JA539
G	JA540	JA540	JA540	JA540	JA519	JA540
H	JA540	JA540	JA540	JA540	JA519	JA540
I	JA539	JA539	JA539	JA539	JA520	JA539
J	JA538	JA544	JA538	JA538	JA521	JA544
K	JA537	JA543	JA537	JA537	JA522	JA543
L	JA536	JA536	JA536	JA536	JA523	JA542
M	JA535	JA535	JA535	JA535	JA524	JA541

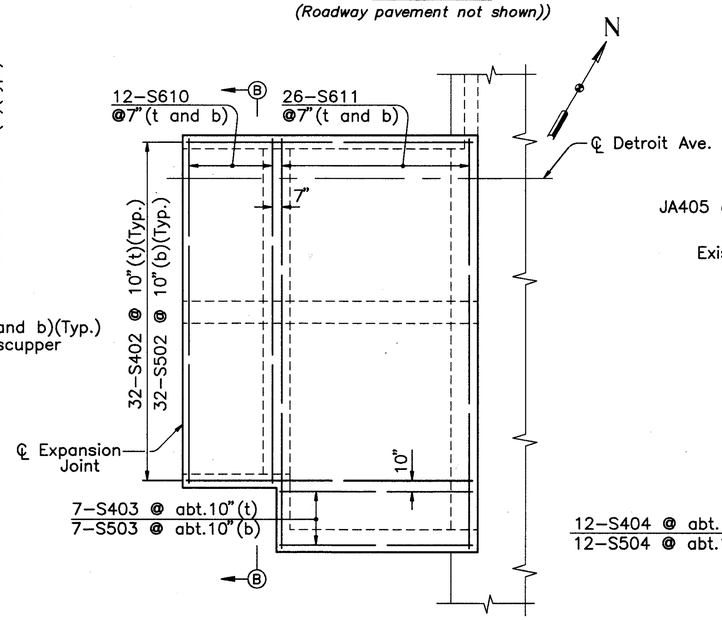

ROOF SLAB PLAN – PANEL 1–2

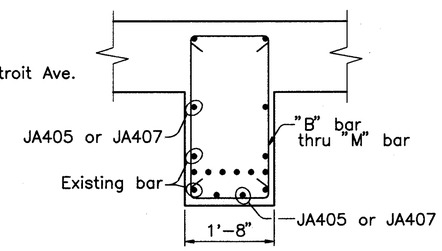

SECTION C–C
(Typ. except at 18–19,A and 20–21,A)

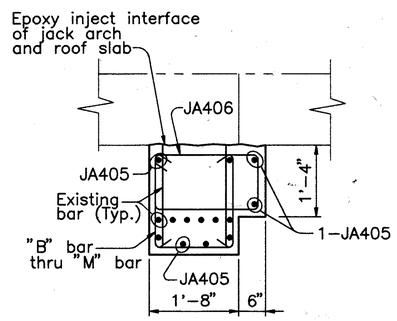

SECTION C–C
(At jack arch 18–19, A)

ROOF SLAB REINFORCEMENT	
JOINT	A
4–5	2–S602 and 2–S613
8–9	4 lines of 4–S603 and 1–S613
10–11	11 lines of 3–S604 and 1–S613
12–13	4 lines of 2–S605 and 1–S613
14–15	6 lines of 2–S605 and 1–S613
16–17	6 lines of 2–S605 and 1–S613
18–19	2 lines of 2–S605 and 1–S613
22–23	2 lines of 2–S606
24–25	2 lines of 2–S607
26–27	2 lines of 3–S608
28–29	2 lines of 2–S609

ALL REINFORCING BAR MARKS SHALL BE PREFIXED WS

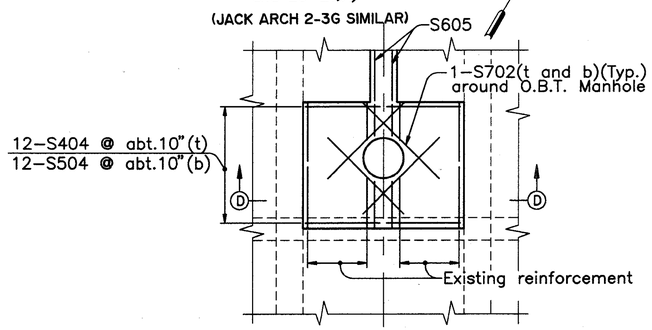

PARTIAL ROOF SLAB PLAN – JOINT 12–13

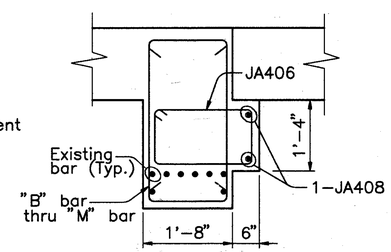

SECTION C–C
(At jack arch 20–21, A)

NOTES:

FOR REMOVAL DETAILS SEE SHEETS 43 /270 AND 44 /270.

FOR ADDITIONAL DETAILS OF O.B.T. MANHOLE SEE SHEET 233A/270.

FIELD CUT REINFORCEMENT TO CLEAR MANHOLE AND SCUPPER, AS REQUIRED.

THE PVC WATERSTOP, PREFORMED EXPANSION JOINT FILLER, JOINT SEALER AND GROUT TUBES SHALL BE INCLUDED WITH ITEM 511 FOR PAYMENT.

THE FOLLOWING ABBREVIATIONS ARE USED:

(f.f.) – FAR FACE
(n.f.) – NEAR FACE
(t) – TOP
(b) – BOTTOM

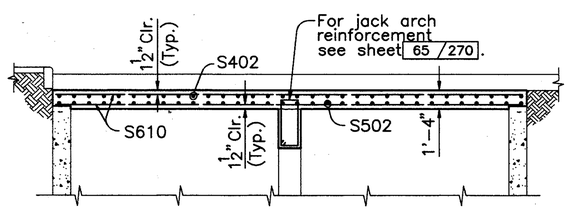

SECTION B–B

NOTE: JACK ARCH FORMWORK TO REMAIN IN PLACE UNTIL ROOF SLAB CONCRETE HAS BEEN PLACED AND CURED.

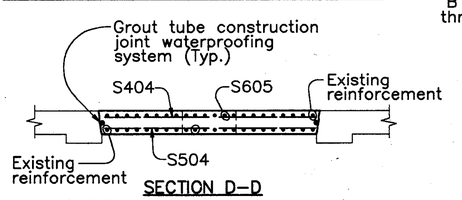

SECTION D–D
(O.B.T. manhole support not shown)

MINIMUM SPLICE LENGTH	
BAR	LENGTH
# 4	1'–9"
# 6	3'–7"

COUNTY BRIDGE NO. 84

HOWARD NEEDLES TAMMEN & BERGENDOFF
ARCHITECTS ENGINEERS PLANNERS
HNTB

ROOF SLAB DETAILS
WEST SIDE STATION
BR. NO. CUY – 6 – 1499
REHABILITATION OF
VETERANS MEMORIAL BRIDGE
(U.S. 6, 20, 42 & S.R. 3 OVER CUYAHOGA RIVER)
CLEVELAND CUYAHOGA COUNTY OHIO

DRAWN B.E.B.	TRACED B.E.B.	CHECKED R.S.Y.	REVIEWED C.A.B.	REVISED
DATE 3/15/94	DATE 3/15/94	DATE 3/20/94	DATE 3/31/94	SHEET 67 /270

\11646\WSRS.DWG

FHWA REGION	STATE	PROJECT	
5	OHIO		

200/412

CUYAHOGA COUNTY
CUY – 6 – 14.99

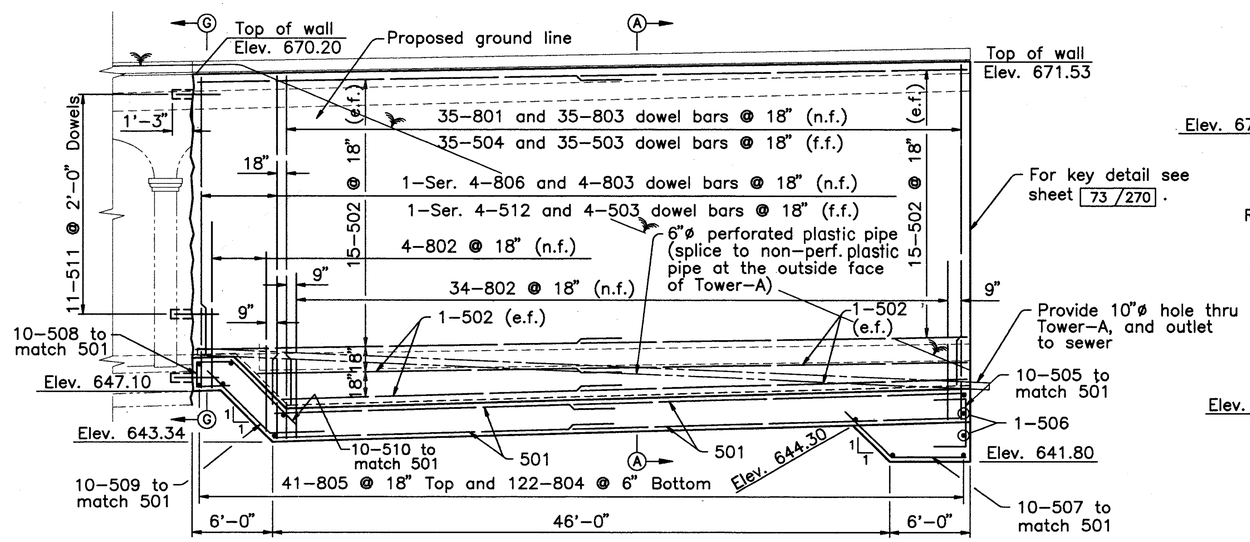

SOUTH WALL ELEVATION
(Railing not shown)

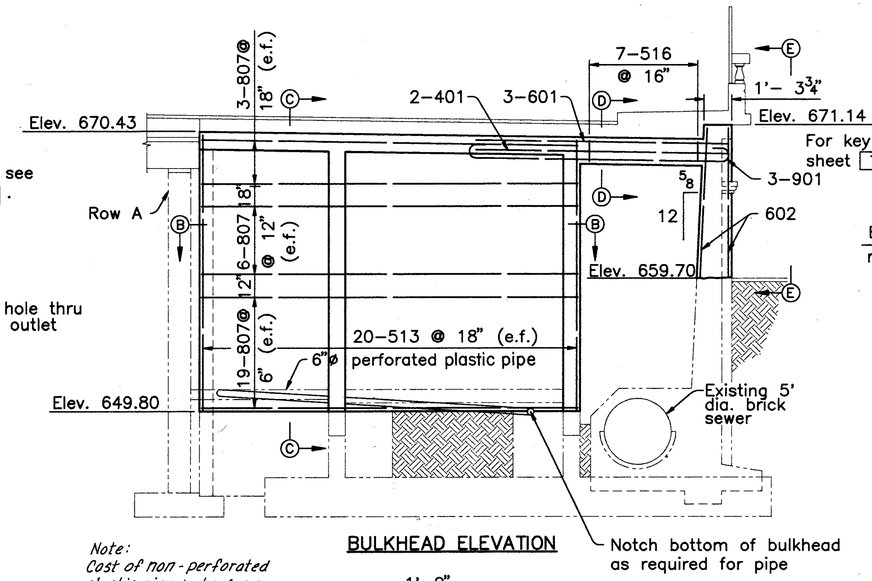

BULKHEAD ELEVATION

Note:
Cost of non-perforated plastic pipe to be same unit cost as perforated plastic pipe.

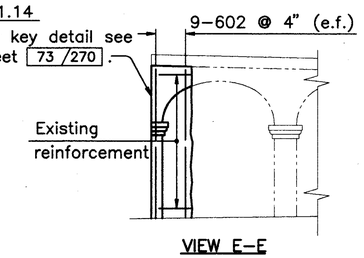

VIEW E–E

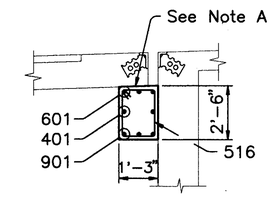

SECTION D–D

NOTE:
BULKHEAD TO BE PLACED AFTER FLOORBEAM IA, IA CONCRETE HAS BEEN PLACED AND CURED.

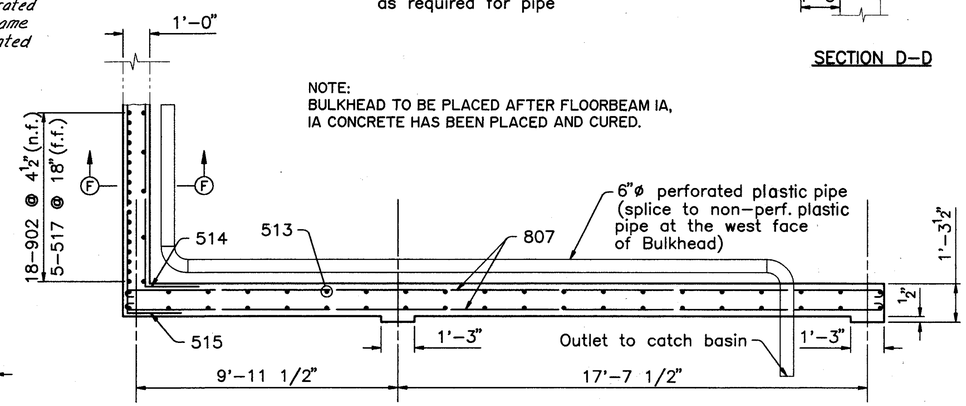

SECTION B–B

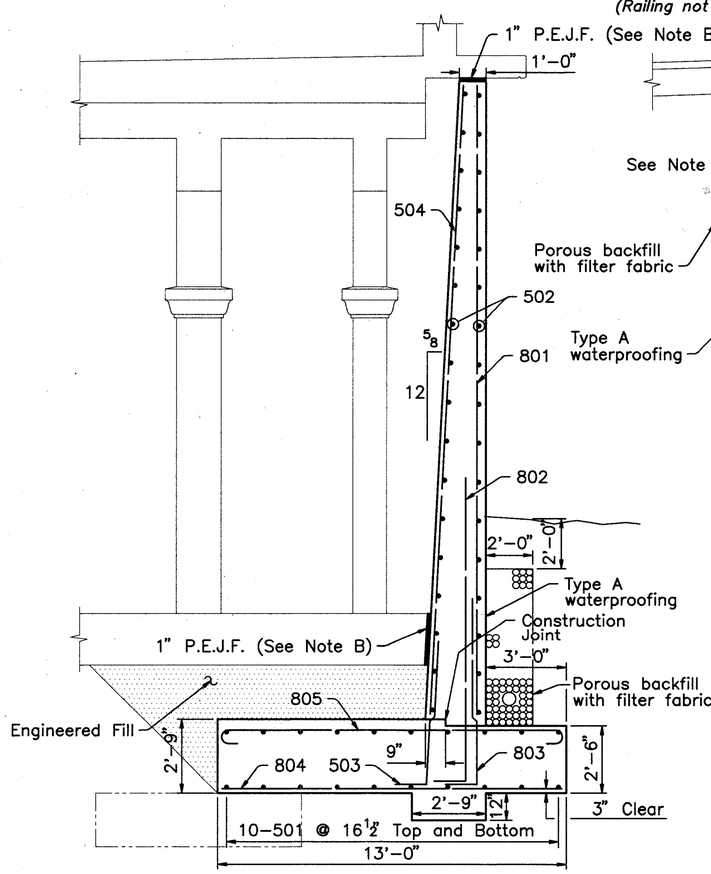

SECTION A–A

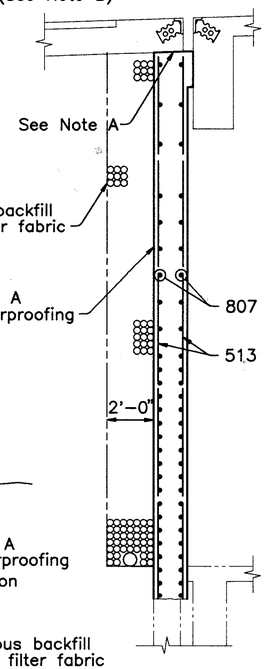

SECTION C–C

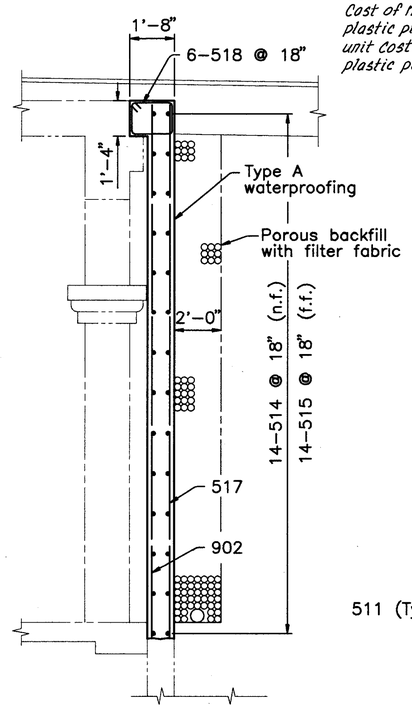

SECTION F–F

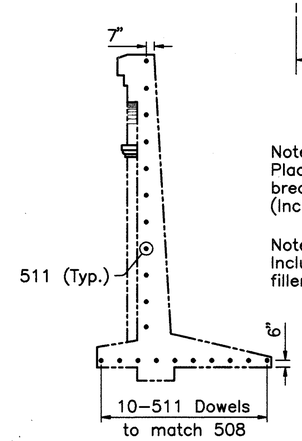

SECTION G–G

Note A:
Place 2 layers of polyethylene bond breaker (705.06) on all contact surfaces. (Include with item 511 for payment)

Note B:
Include preformed expansion joint filler with item 511 for payment.

ALL REINFORCING BAR MARKS SHALL BE PREFIXED AS FOLLOWS:
WEST STATION WALLS – WSWE

MINIMUM SPLICE LENGTH	
BAR	LENGTH
# 5	2'–10"
# 8	5'–2"

NOTES:

FOR REMOVAL DETAILS SEE SHEET 45/270 AND 46/270.

FOR ADDITIONAL WEST SIDE STATION REPLACEMENT AND REPAIR DETAILS SEE SHEETS 66/270, 67/270 AND SHEETS 69/270 THRU 72/270.

FOR TOWER A REPLACEMENT DETAILS SEE SHEETS 73/270 AND 74/270.

P.E.J.F. – PREFORMED EXPANSION JOINT FILLER
(e.f.) – EACH FACE
(n.f.) – NEAR FACE
(f.f.) – FAR FACE

COUNTY BRIDGE NO. 84

HOWARD NEEDLES TAMMEN & BERGENDOFF
ARCHITECTS ENGINEERS PLANNERS
HNTB

WALL REPLACEMENT DETAILS
WEST SIDE STATION
BR. NO. CUY – 6 – 1499
REHABILITATION OF
VETERANS MEMORIAL BRIDGE
(U.S. 6, 20, 42 & S.R. 3 OVER CUYAHOGA RIVER)

CLEVELAND CUYAHOGA COUNTY OHIO

DRAWN	TRACED	CHECKED	REVIEWED	REVISED
R.S.Y.	R.S.Y.	B.E.B.	C.A.B.	8/20/94
DATE 3/10/94	DATE 3/10/94	DATE 3/25/94	DATE 3/31/94	SHEET 68/270

\11646\WSWALL.DWG

FHWA REGION	STATE	PROJECT	
5	OHIO		

201/412

CUYAHOGA COUNTY
CUY – 6 – 14.99

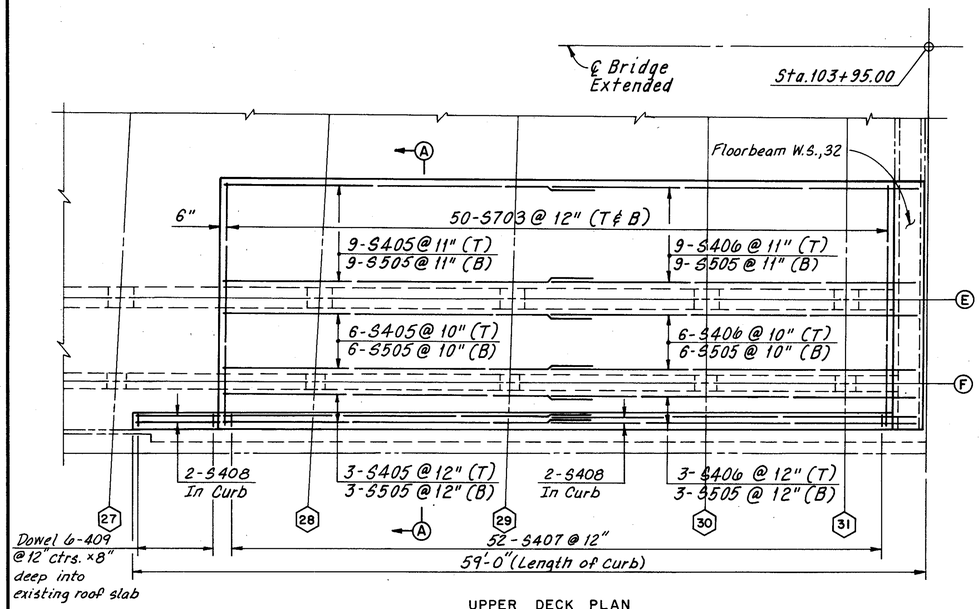

UPPER DECK PLAN
(Existing reinforcement not shown)

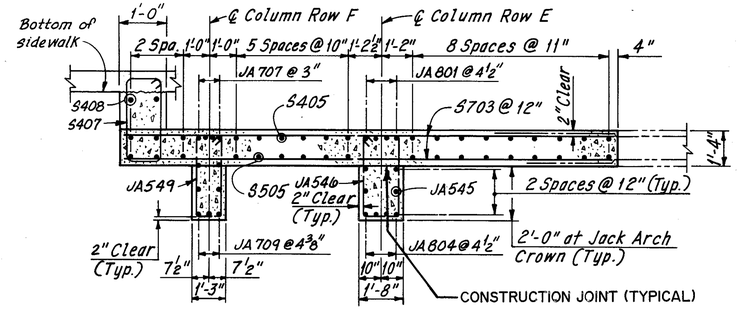

SECTION A-A

NOTE:
JACK ARCH FORMWORK TO REMAIN IN PLACE UNTIL ROOF SLAB CONCRETE HAS BEEN PLACED AND CURED.

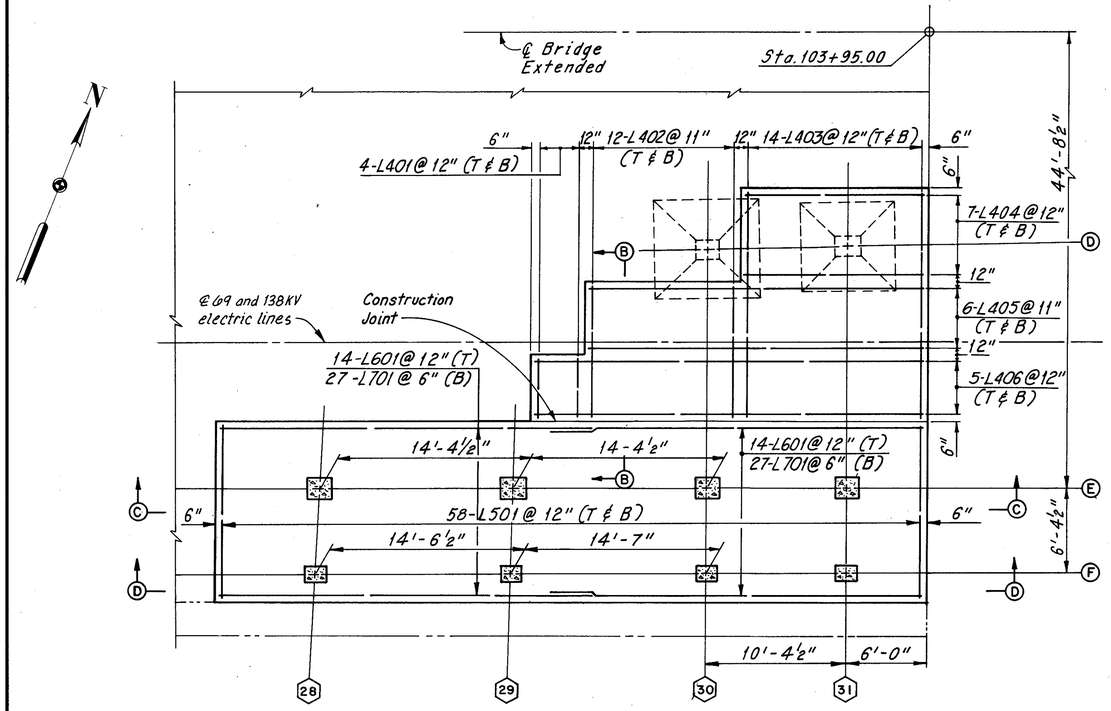

LOWER DECK PLAN
(Existing reinforcement not shown)

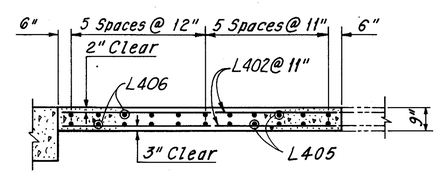

SECTION B-B

MINIMUM SPLICE LENGTH	
BAR	LENGTH
# 4	1'-9"
# 5	2'-0"
# 6	3'-7"
# 7	3'-11"

ALL REINFORCING BAR MARKS SHALL BE PREFIXED WS

NOTES:

FOR WALL REPLACEMENT DETAILS SEE SHEET 68/270.

FOR SECTIONS C–C AND D–D, SEE SHEET 70/270.

LOWER DECK SLAB CONCRETE SHALL BE CLASS C, FOOTINGS.

COUNTY BRIDGE NO. 84

HOWARD NEEDLES TAMMEN & BERGENDOFF
ARCHITECTS ENGINEERS PLANNERS
HNTB

REPAIR – WEST SIDE STATION AT TOWER A
BR. NO. CUY – 6 – 1499
REHABILITATION OF
VETERANS MEMORIAL BRIDGE
(U.S. 6, 20, 42 & S.R. 3 OVER CUYAHOGA RIVER)
CLEVELAND CUYAHOGA COUNTY OHIO

DRAWN C.K.B.	TRACED C.E.P.	CHECKED W.J.V.	REVIEWED C.A.B.	REVISED DB. 8/20/91
DATE 7/13/90	DATE 7/20/90	DATE 2/7/91	DATE 3/31/94	SHEET 69/270

FHWA REGION	STATE	PROJECT	
5	OHIO		

202 / 412

CUYAHOGA COUNTY
CUY – 6 – 14.99

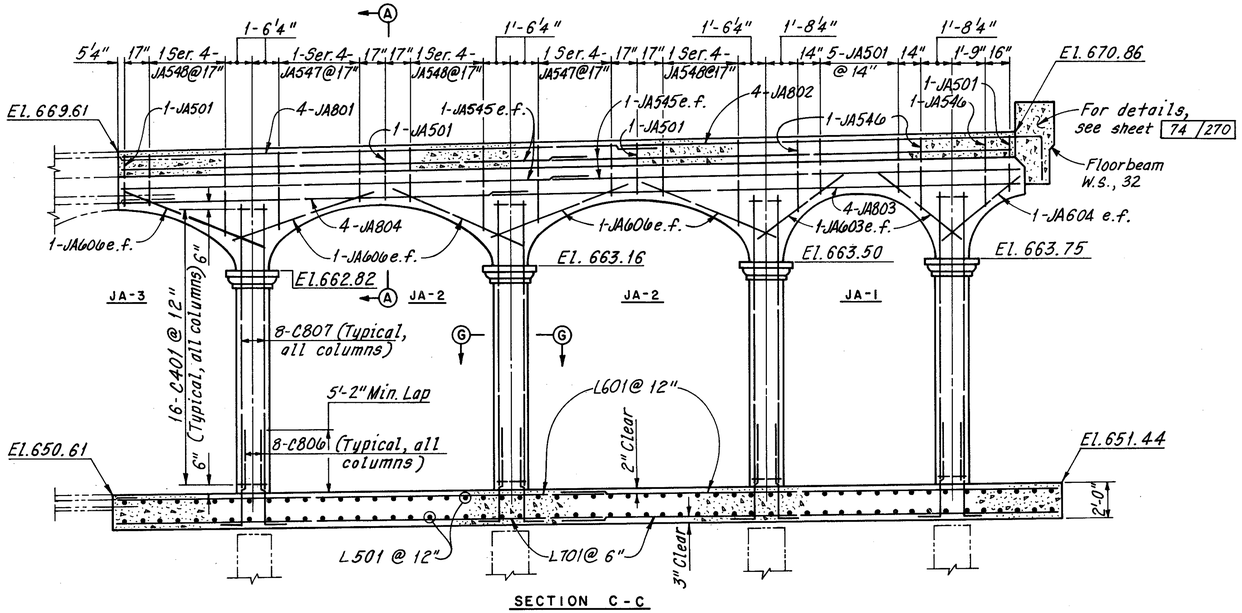

SECTION C-C

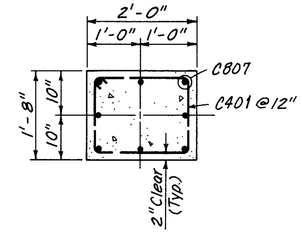

SECTION G-G

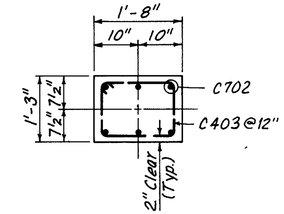

SECTION H-H

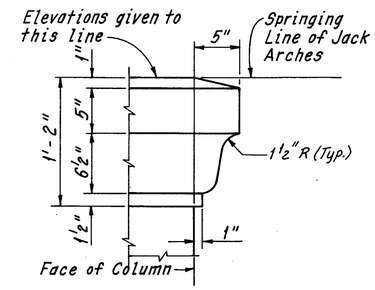

COLUMN CAP DETAIL
(Dimensions are typical on 4 faces of Column)

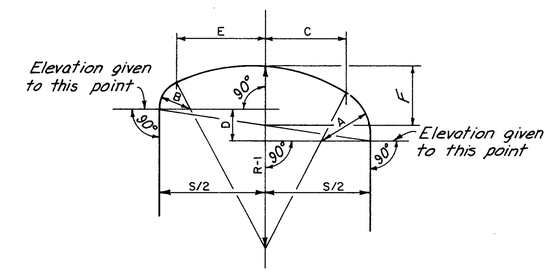

JACK ARCH DETAIL

NOTES:
DIMENSIONS "A" AND "C" ARE ALWAYS FOR THE LOWER SIDE OF THE ARCH. DIMENSIONS "B" AND "E" ARE ALWAYS FOR THE UPPER SIDE.

THE INTRADOS OF ALL CANTILEVER BEAMS ARE TO BE MADE THE SAME CURVE AS THE FAR SIDE OF THE ADJACENT JACK ARCH.

TABLE OF JACK ARCH DIMENSIONS					
DIM	JA-1	JA-2	JA-3	JA-4	JA-5
S	8'-4-1/2"	12'-4-1/2"	12'-4-1/2"	8'-8-1/2"	12'-10-1/2"
D	0'-3"	0'-4-1/8"	0'-4-1/2"	0'-3"	0'-4-1/4"
R-1	11'-0"	8'-7"	8'-7"	11'-0"	10'-0"
F	3'-7-1/2"	3'-7-1/2"	3'-7-1/2"	3'-7-1/2"	3'-7-1/2"
A	3'-8-7/8"	2'-7-1/8"	2'-7-5/8"	3'-8-5/8"	2'-10"
B	3'-5-5/8"	1'-10-7/8"	1'-10-1/4"	3'-5-1/4"	2'-2-3/8"
C	0'-8"	5'-1-3/4"	5'-1-1/2"	0'-11-3/8"	5'-0-3/8"
E	1'-0-5/8"	5'-6"	5'-6-1/4"	1'-0-1/4"	5'-5-1/4"

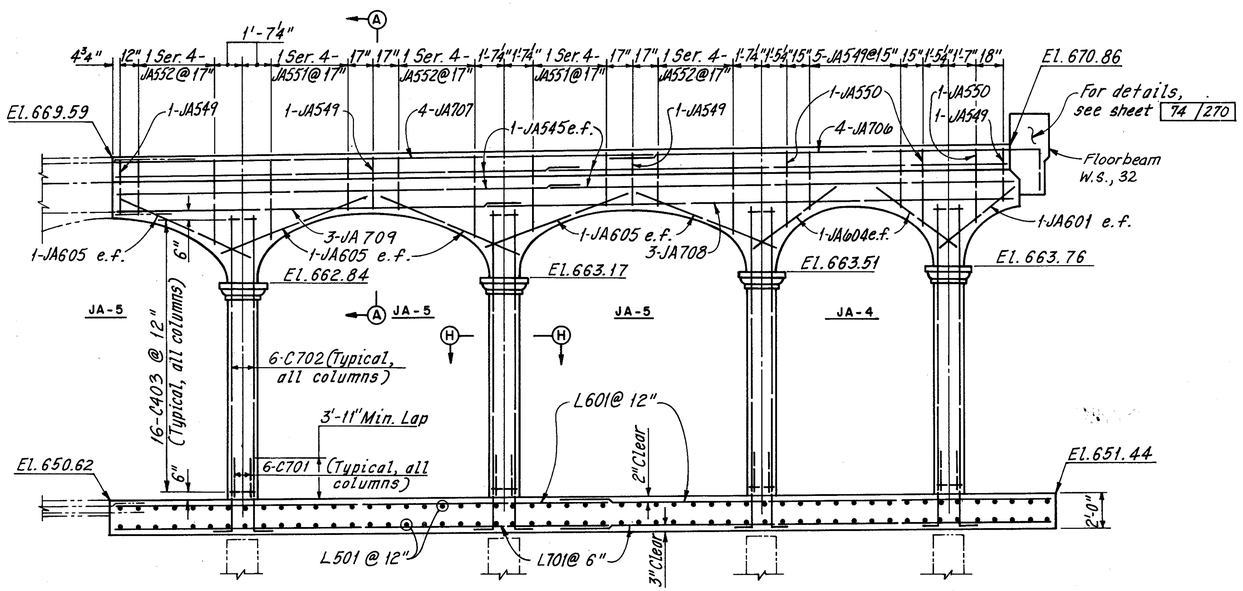

SECTION D-D

ALL REINFORCING BAR MARKS SHALL BE PREFIXED WS

MINIMUM SPLICE LENGTH	
BAR	LENGTH
# 5	2'-0"
# 7	3'-0"
# 8	3'-6"

NOTES:
FOR SECTION A-A AND LOCATION OF SECTIONS C-C AND D-D, SEE SHEET 69 / 270.

COUNTY BRIDGE NO. 84

HOWARD NEEDLES TAMMEN & BERGENDOFF
ARCHITECTS ENGINEERS PLANNERS
HNTB

REPAIR – WEST SIDE STATION AT TOWER A
BR. NO. CUY – 6 – 1499
REHABILITATION OF
VETERANS MEMORIAL BRIDGE
(U.S. 6, 20, 42 & S.R. 3 OVER CUYAHOGA RIVER)
CLEVELAND CUYAHOGA COUNTY OHIO

DRAWN C.K.B.	TRACED C.E.P.	CHECKED W.J.V.	REVIEWED C.A.B.	REVISED
DATE 7/24/90	DATE 7/27/90	DATE 2/7/91	DATE 3/31/94	SHEET 70 / 270

FHWA REGION	STATE	PROJECT	
5	OHIO		

203/412

CUYAHOGA COUNTY
CUY – 6 – 14.99

MINIMUM SPLICE LENGTH	
BAR	LENGTH
# 4	1'–9"
# 5	2'–0"
# 6	3'–0"
# 7	4'–8"

EXPANSION JOINT DETAIL

WATERSTOP DETAIL

(Include with Sidewalk Concrete for payment)

** For the first pour, the waterstop shall be held securely in place by the use of split forms and tie–wires. For the second pour, secure the free end of waterstop in proper position with tie–wires. Alternate methods, as approved by the Engineer may be used to ensure the correct positioning of the waterstop.

Note A:
Joint to be doweled in accordance with Standard Construction Drawing No. BP–2.2. Include with slab for payment.

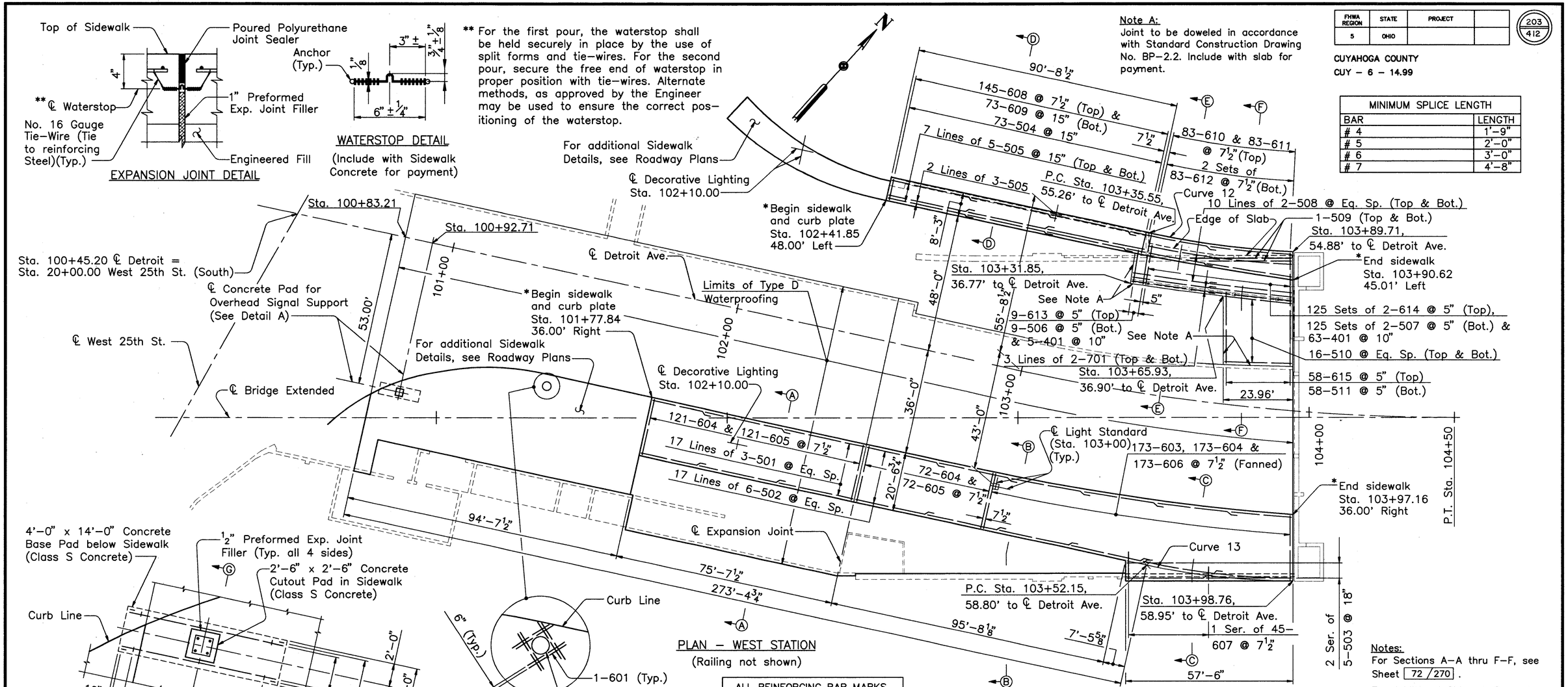

PLAN – WEST STATION

(Railing not shown)

DETAIL A

ANCHOR PLATE DETAIL

SECTION G–G

ALL REINFORCING BAR MARKS SHALL BE PREFIXED AS FOLLOWS:
WEST SIDE STATION – WSES

*NOTE: GROUT TO BE PLACED AND CURED AFTER POLE IS ERECTED AND PRIOR TO ERECTION OF MAST ARM AND SIGNAL.

Overhead Signal Support Notes:

Fill Dowel holes in West Sta. Roof Beam with cement grout after securing the anchor bolts.

All labor, materials, equipment and incidentals necessary to place the Overhead Signal Support including the 402 and 602 bars, Concrete Cutout and Base Pads, Base Plate, Anchor Rods and the drilling of dowel holes shall be included with Item 632, Signal Support, Type TC–81.20.

For additional details, see Standard Constr. Dwg. No. TC–81.20.

CURVE 12

P.C. STA. = 103+35.55, 55.26' LT.
D = 19° 16' 19.36"
Δ = 12° 23' 20.00"
L = 64.28'
T = 32.27'
E = 1.77'
R = 297.30'
P.T. STA. = 104+05.24, 55.60' LT.

CURVE 13

P.C. STA. = 103+52.15, 58.80' RT.
D = 24° 14' 38.31"
Δ = 12° 23' 20.00"
L = 51.10'
T = 25.65'
E = 1.40'
R = 236.33'
P.T. STA. = 103+99.22, 58.91' RT.

Notes:

For Sections A–A thru F–F, see Sheet 72/270.

For Additional Sidewalk Geometry, see Sheet 21/270.

* For O.B.T. Support Details, see Sheet 233A/270.

For Light Standard Details, see Sheet 212/270 and 222/270.

For Decorative Lighting Details, see Lighting Plans.

COUNTY BRIDGE NO. 84

HOWARD NEEDLES TAMMEN & BERGENDOFF
ARCHITECTS ENGINEERS PLANNERS
HNTB

WEST SIDE STATION – SIDEWALK AND ROADWAY SLAB DETAILS
BR. NO. CUY – 6 – 1499
REHABILITATION OF VETERANS MEMORIAL BRIDGE
(U.S. 6, 20, 42 & S.R. 3 OVER CUYAHOGA RIVER)

CLEVELAND CUYAHOGA COUNTY OHIO

DRAWN J.L.V.	TRACED J.L.V.	CHECKED B.E.B.	REVIEWED C.A.B.	REVISED
DATE 3/28/94	DATE 3/28/94	DATE 3/31/94	DATE 4/04/94	SHEET 71/270

\11646\CONCRETE\WSTD1.DWG

FHWA REGION	STATE	PROJECT	
5	OHIO		

204/412

CUYAHOGA COUNTY
CUY – 6 – 14.99

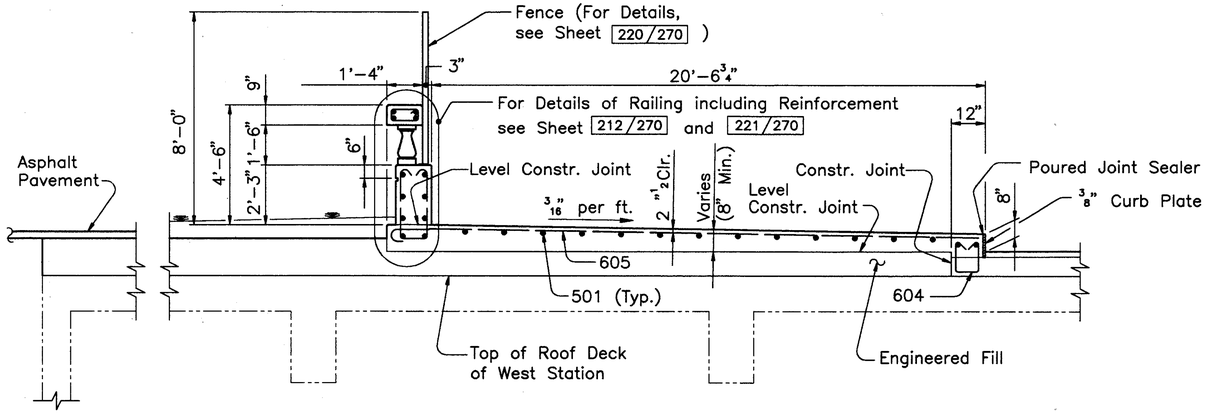

SECTION A–A

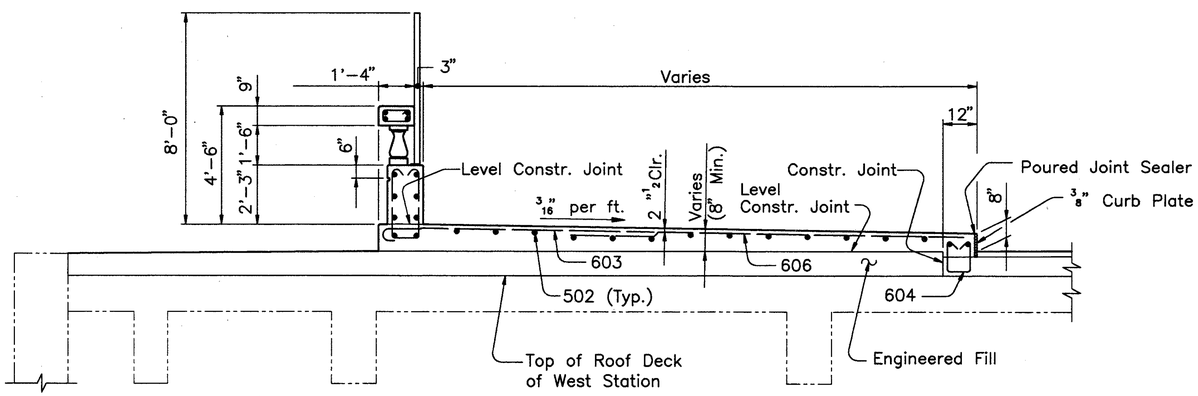

SECTION B–B

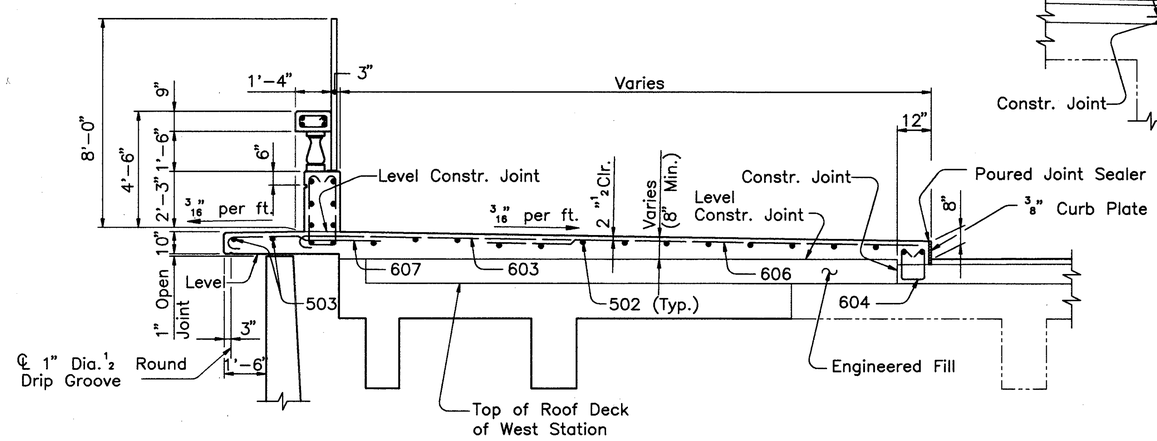

SECTION C–C

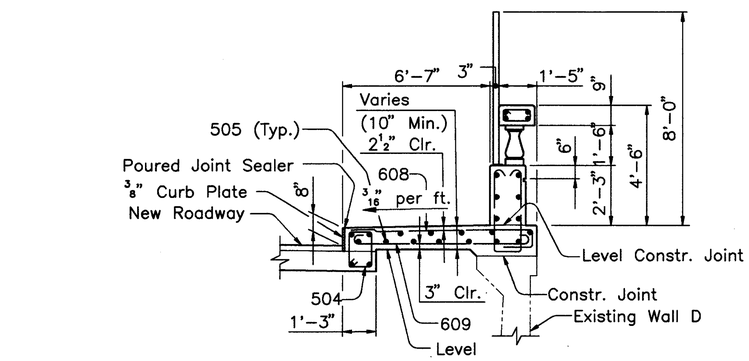

SECTION D–D

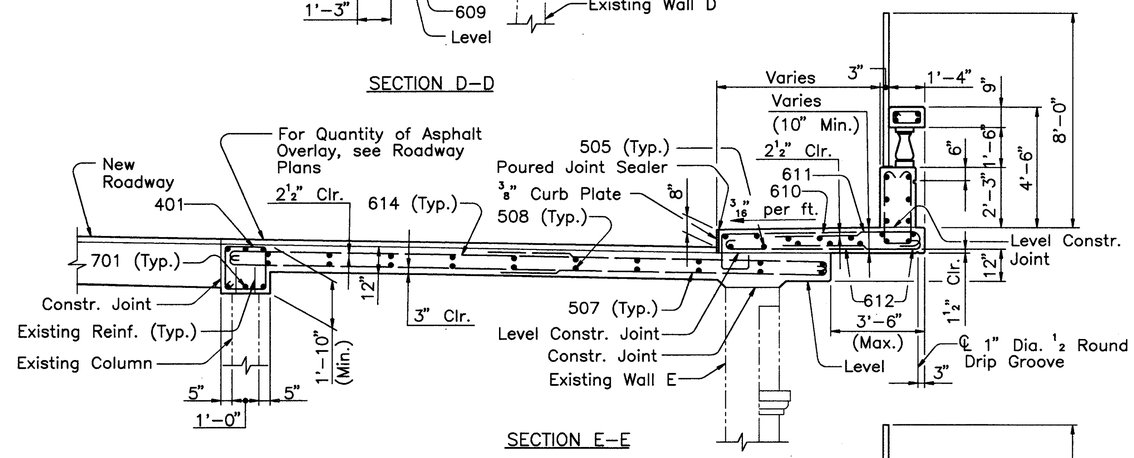

SECTION E–E

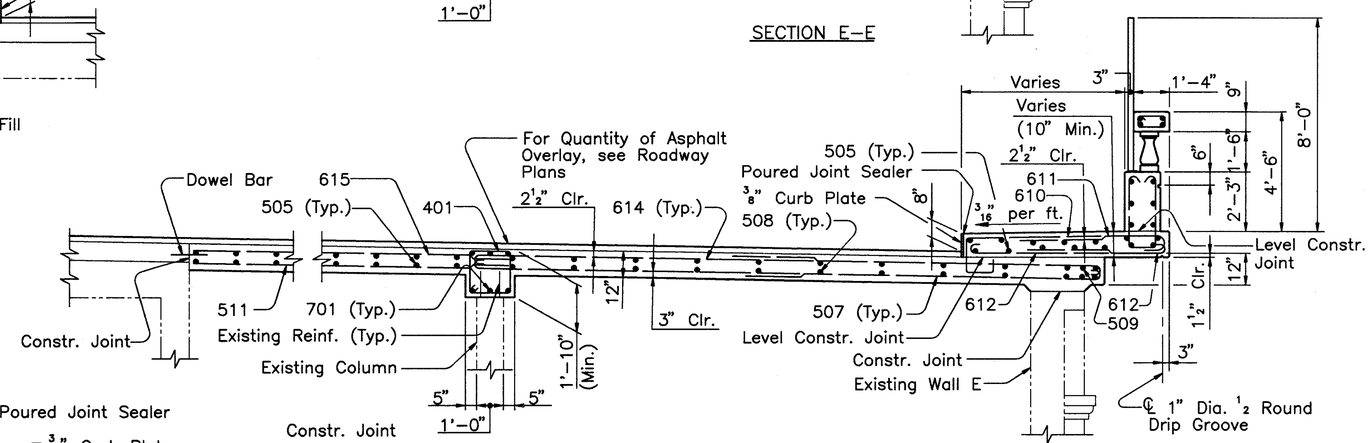

SECTION F–F

Notes:
For location of Sections A–A thru F–F, see Sheet 71/270 .

ALL REINFORCING BAR MARKS SHALL BE PREFIXED AS FOLLOWS:
WEST SIDE STATION – WSES

MINIMUM SPLICE LENGTH	
BAR	LENGTH
# 4	1'-9"
# 5	2'-0"
# 6	3'-0"
# 7	4'-8"

COUNTY BRIDGE NO. 84

HOWARD NEEDLES TAMMEN & BERGENDOFF
ARCHITECTS ENGINEERS PLANNERS
HNTB

WEST SIDE STATION – SIDEWALK AND ROADWAY SLAB DETAILS
BR. NO. CUY – 6 – 1499
REHABILITATION OF
VETERANS MEMORIAL BRIDGE
(U.S. 6, 20, 42 & S.R. 3 OVER CUYAHOGA RIVER)
CLEVELAND CUYAHOGA COUNTY OHIO

DRAWN J.L.V.	TRACED J.L.V.	CHECKED B.E.B.	REVIEWED C.A.B.	REVISED
DATE 3/28/94	DATE 3/28/94	DATE 3/31/94	DATE 4/04/94	SHEET 72/270

\11646\CONCRETE\WSTD1.DWG

FHWA REGION	STATE	PROJECT	
5	OHIO		

205/412

CUYAHOGA COUNTY
CUY – 6 – 14.99

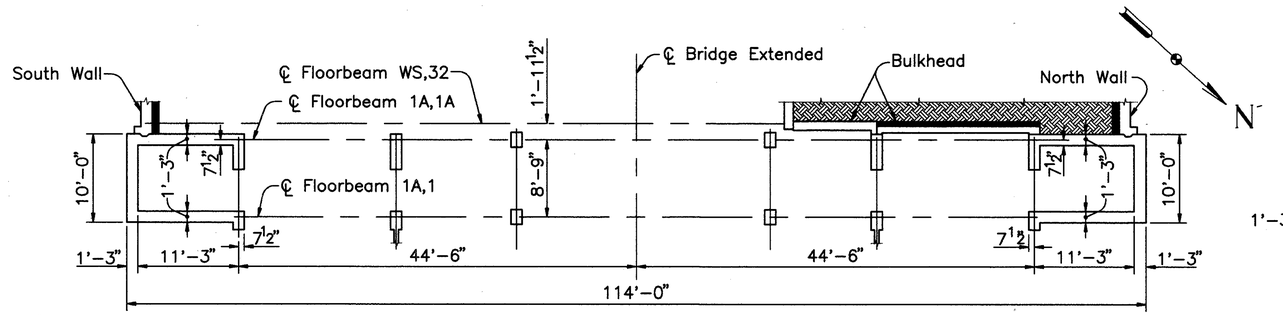

LOCATION PLAN – TOWER A

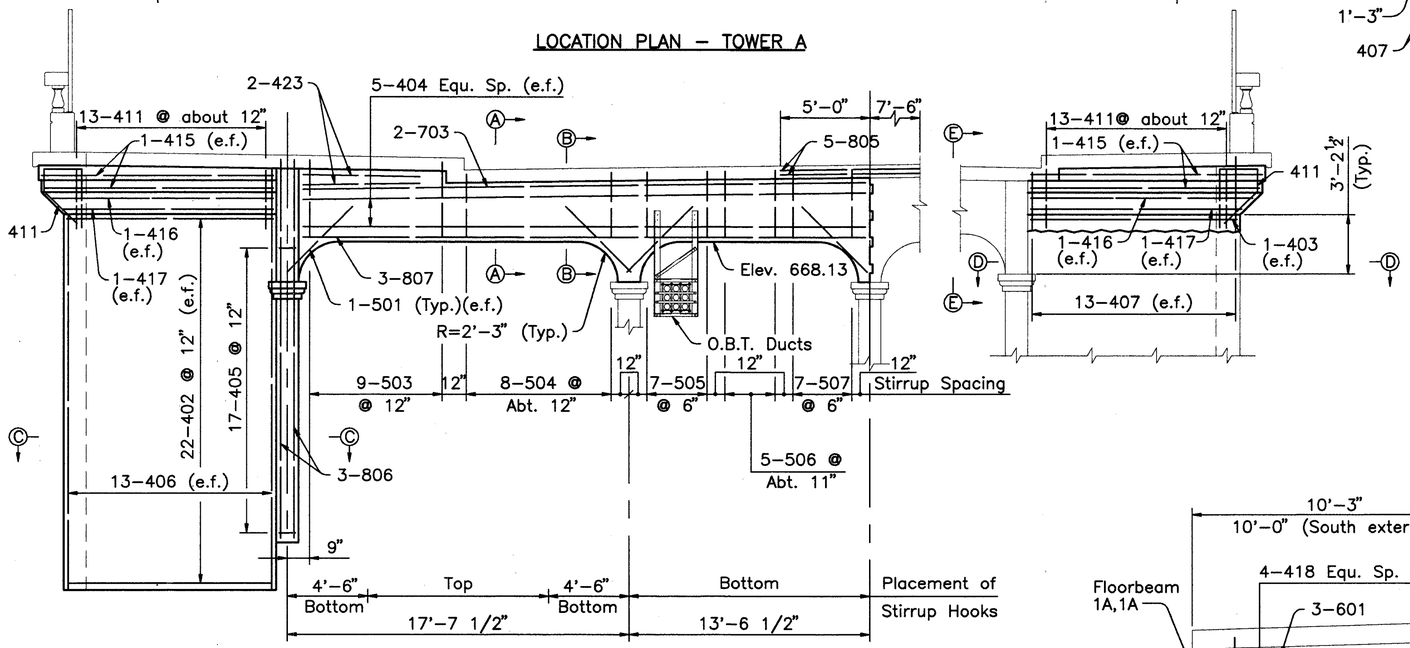

FLOORBEAM 1A,1 PARTIAL ELEVATION
(Looking west)

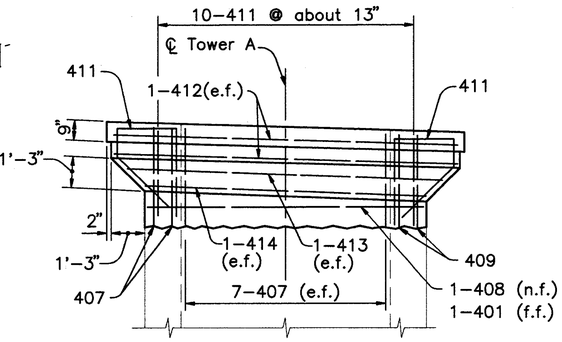

North Elevation
(Looking south)
(Sidewalk slab not shown)

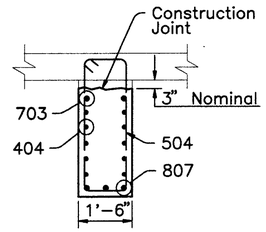

SECTION A–A
(Slab reinforcement not shown)

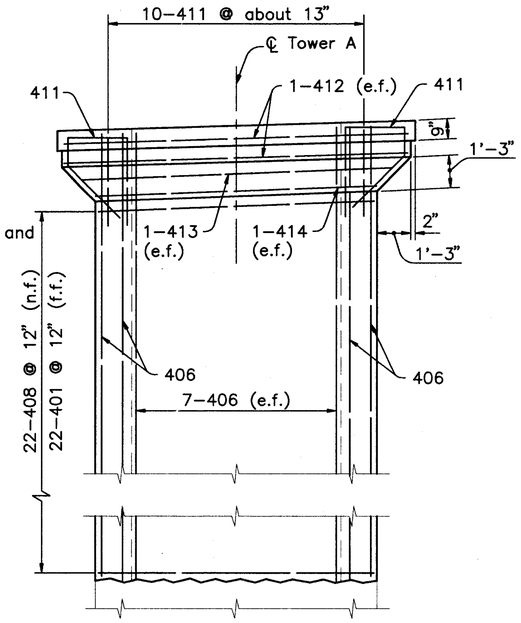

South Elevation
(Looking north)
(Sidewalk slab not shown)

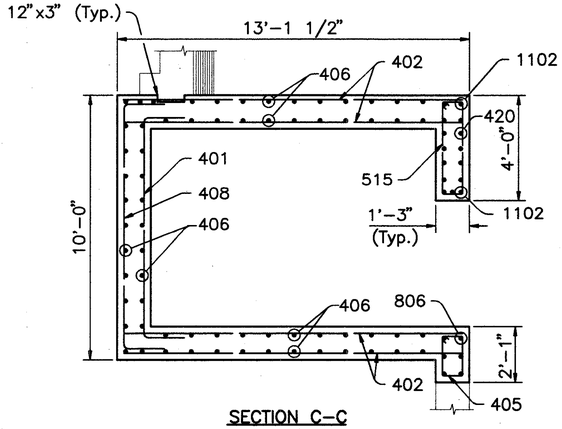

SECTION C–C

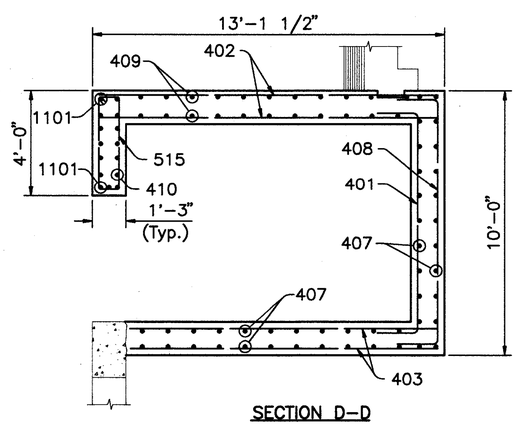

SECTION D–D

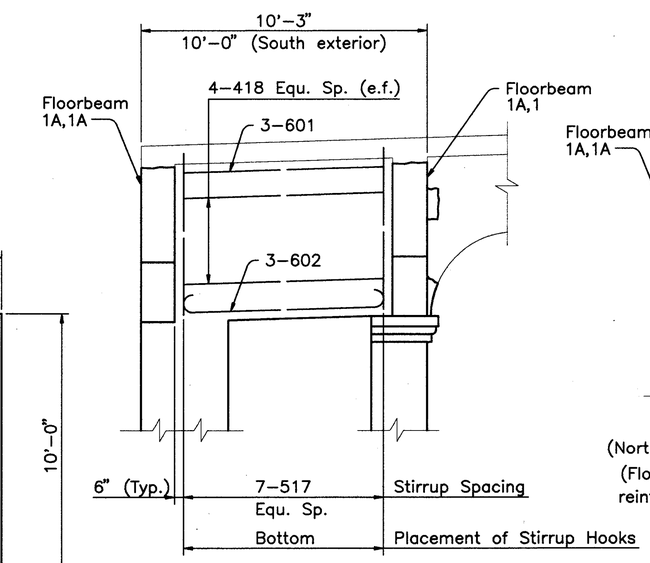

SECTION B–B
(South exterior row similar)
(Floorbeam and column reinforcement not shown)

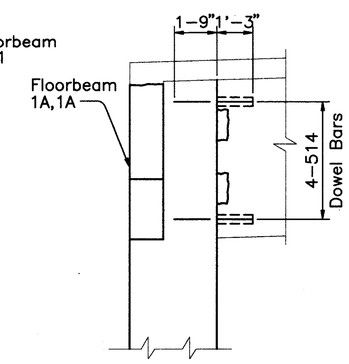

SECTION E–E
(North central row similar)
(Floorbeam and column reinforcement not shown)

ALL REINFORCING BAR MARKS SHALL BE PREFIXED AS FOLLOWS:		
Tower A	–	TAE

MINIMUM SPLICE LENGTH	
BAR	LENGTH
# 4	2'-3"
# 7	4'-8"
# 8	5'-2"

FOR REMOVAL DETAILS, SEE SHEET 46/270.

FOR UTILITY SUPPORT DETAILS, SEE SHEETS 232/270 AND 233/270.

e.f. DENOTES EACH FACE

ALL REINFORCING BAR MARKS FOR FLOORBEAM 1A,1 INCLUDING COLUMNS SHALL BE PREFIXED TAE.

COUNTY BRIDGE NO. 84

HOWARD NEEDLES TAMMEN & BERGENDOFF
ARCHITECTS ENGINEERS PLANNERS
HNTB

REPLACEMENT DETAILS
TOWER A
BR. NO. CUY – 6 – 1499
REHABILITATION OF
VETERANS MEMORIAL BRIDGE
(U.S. 6, 20, 42 & S.R. 3 OVER CUYAHOGA RIVER)
CLEVELAND CUYAHOGA COUNTY OHIO

DRAWN R.S.Y.	TRACED R.S.Y.	CHECKED A.D.Y.	REVIEWED C.A.B.	REVISED
DATE 12/14/93	DATE 12/14/93	DATE 3/15/94	DATE 3/31/94	SHEET 73/270

\11646\022\TOWER-A

FHWA REGION	STATE	PROJECT	
5	OHIO		

206/412

CUYAHOGA COUNTY
CUY - 6 - 14.99

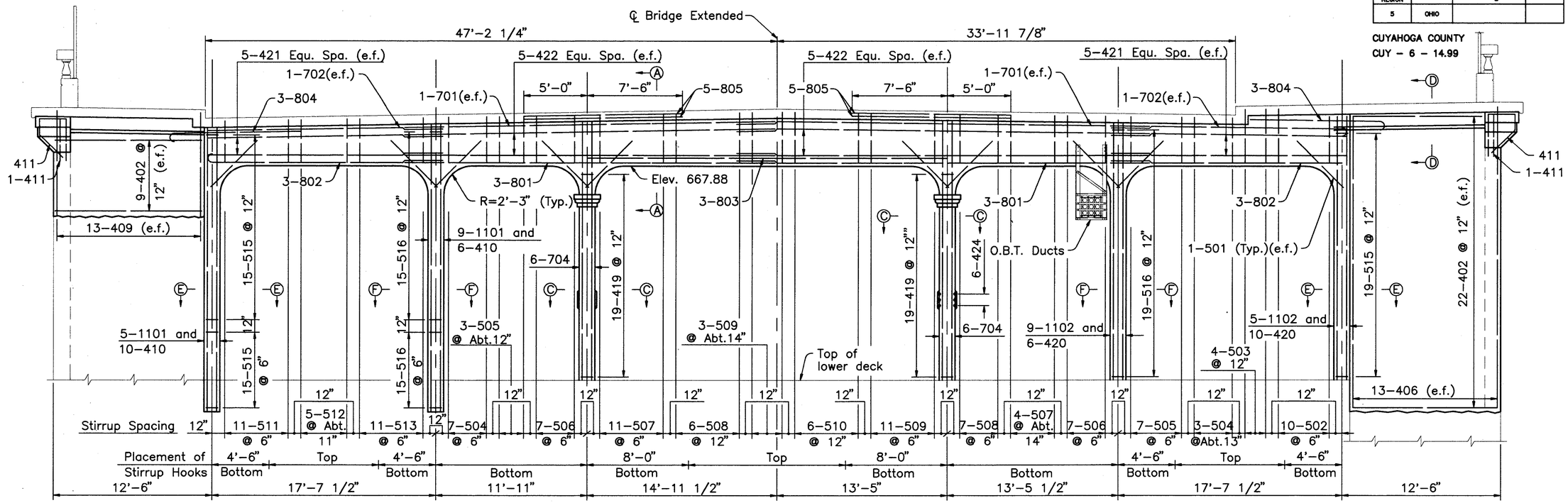

FLOORBEAM 1A,1A ELEVATION
(Looking east)

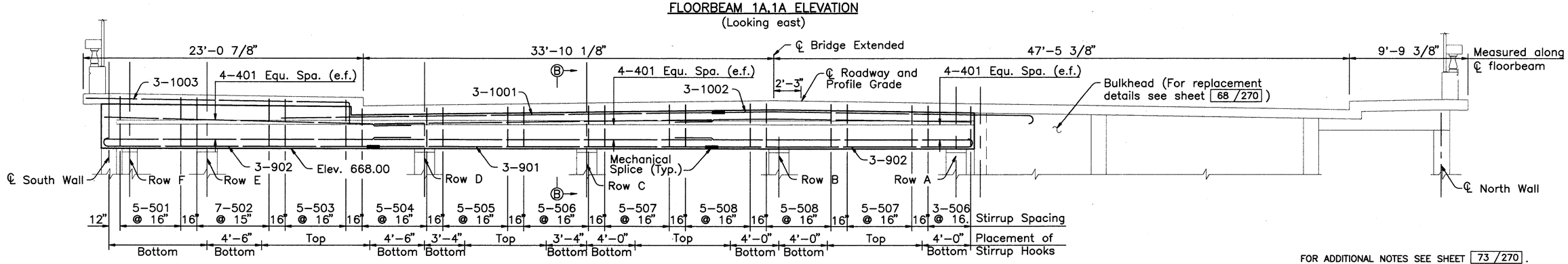

FLOORBEAM WS,32 ELEVATION
(Looking west)

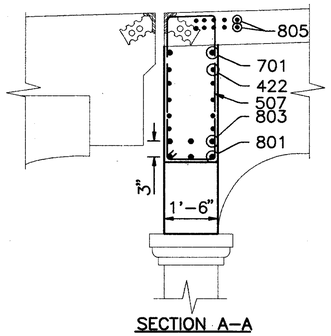

SECTION A-A

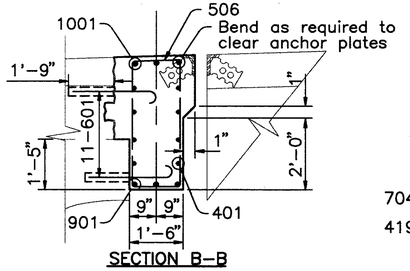

SECTION B-B

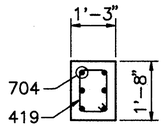

SECTION C-C

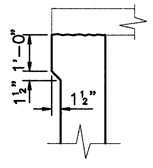

SECTION D-D

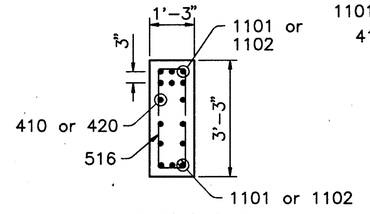

SECTION F-F

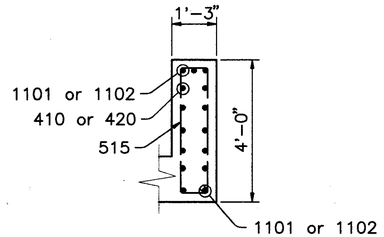

SECTION E-E
(North column shown, south column opposite hand)

FOR ADDITIONAL NOTES SEE SHEET 73/270.

ALL REINFORCING BAR MARKS FOR FLOORBEAM 1A,1A INCLUDING COLUMNS SHALL BE PREFIXED TAE.
ALL REINFORCING BAR MARKS FOR FLOORBEAM WS,32 SHALL BE PREFIXED WSEB.

COUNTY BRIDGE NO. 84

HOWARD NEEDLES TAMMEN & BERGENDOFF
ARCHITECTS ENGINEERS PLANNERS
HNTB

REPLACEMENT DETAILS
TOWER A

BR. NO. CUY - 6 - 1499
REHABILITATION OF
VETERANS MEMORIAL BRIDGE
(U.S. 6, 20, 42 & S.R. 3 OVER CUYAHOGA RIVER)

CLEVELAND CUYAHOGA COUNTY OHIO

DRAWN R.S.Y.	TRACED R.S.Y.	CHECKED A.D.Y.	REVIEWED C.A.B.	REVISED
DATE 12/14/93	DATE 12/14/93	DATE 3/15/94	DATE 3/31/94	SHEET 74/270

\11646\022\TOWER-A

FHWA REGION	STATE	PROJECT	
5	OHIO		

207/412

CUYAHOGA COUNTY
CUY – 6 – 14.99

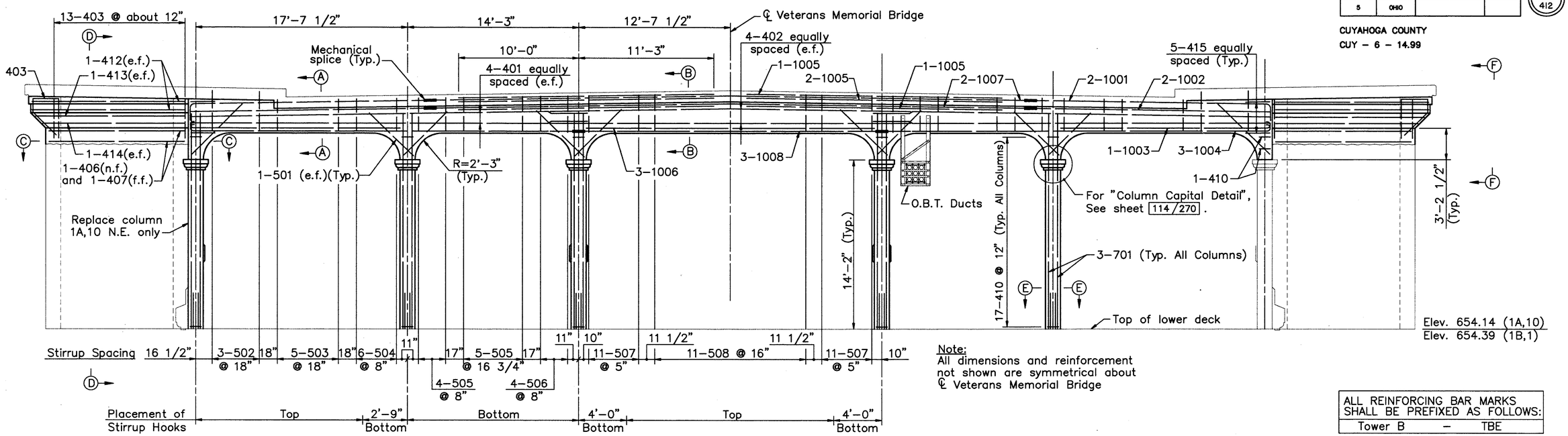

Note:
All dimensions and reinforcement not shown are symmetrical about ℄ Veterans Memorial Bridge

FLOORBEAM 1A,10
(Looking east)
(Floorbeam 1B,1 similar)

ALL REINFORCING BAR MARKS SHALL BE PREFIXED AS FOLLOWS:		
Tower B	–	TBE

MINIMUM SPLICE LENGTH	
BAR	LENGTH
# 4	2'–3"

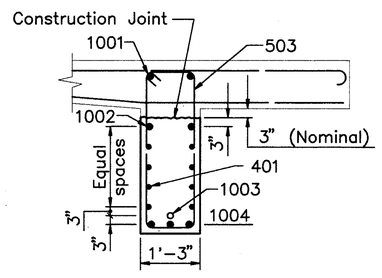

SECTION A–A
(Transverse Slab Bars Not Shown)
• – Designates Full Length Bar
○ – Designates Partial Length Bar

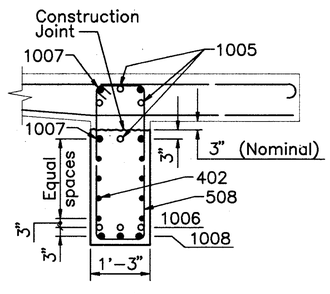

SECTION B–B
(Transverse Slab Bars Not Shown)
• – Designates Full Length Bar
○ – Designates Partial Length Bar

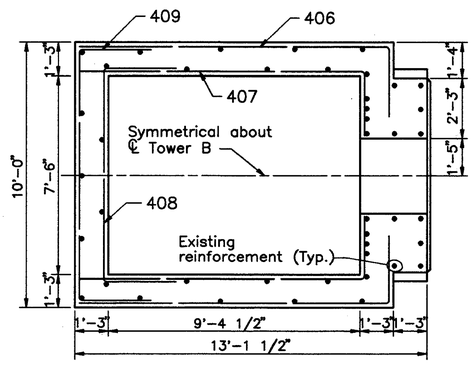

SECTION C–C

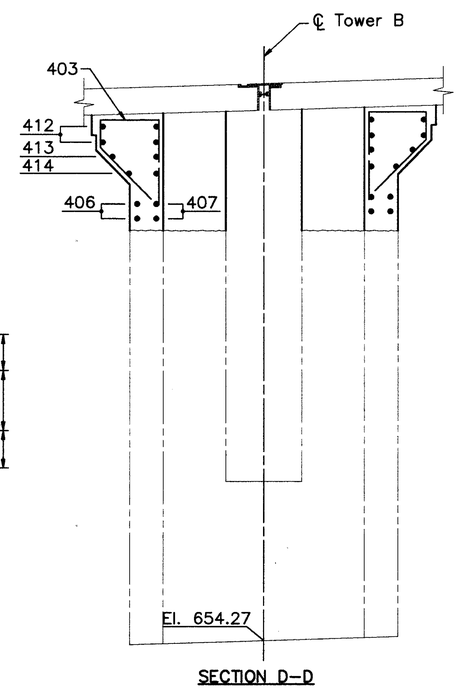

SECTION D–D

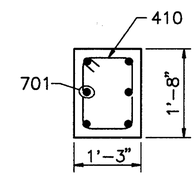

SECTION E–E
(Typical)

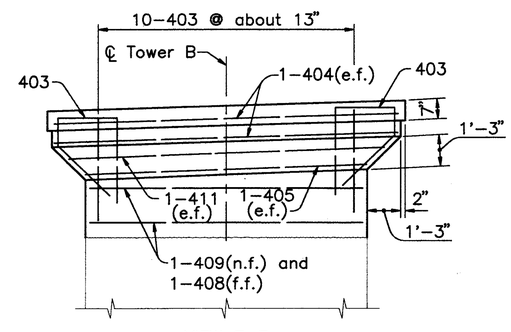

VIEW F–F
(North side similar)
(Sidewalk slab not shown)

NOTES:

FOR DETAIL AT REPLACEMENT JACK ARCH LOCATIONS, SEE SHEET 118/270.

FOR REMOVAL DETAILS, SEE SHEETS 47/270.

FOR UTILITY SUPPORT DETAILS, SEE SHEETS 232/270 AND 233/270.

FOR LOWER DECK RAILING DETAILS, SEE SHEET 111/270.

n.f. DENOTES NEAR FACE

f.f. DENOTES FAR FACE

e.f. DENOTES EACH FACE

COUNTY BRIDGE NO. 84

HOWARD NEEDLES TAMMEN & BERGENDOFF
ARCHITECTS ENGINEERS PLANNERS
HNTB

REPLACEMENT DETAILS
TOWER B
BR. NO. CUY – 6 – 1499
REHABILITATION OF
VETERANS MEMORIAL BRIDGE
(U.S. 6, 20, 42 & S.R. 3 OVER CUYAHOGA RIVER)
CLEVELAND CUYAHOGA COUNTY OHIO

DRAWN R.S.Y.	TRACED R.S.Y.	CHECKED A.D.Y.	REVIEWED C.A.B.	REVISED
DATE 6/18/93	DATE 6/18/93	DATE 3/18/94	DATE 3/31/94	SHEET 75/270

\11646\CONCRETE\UDFB6

FHWA REGION	STATE	PROJECT	
5	OHIO		

208 / 412

CUYAHOGA COUNTY
CUY – 6 – 14.99

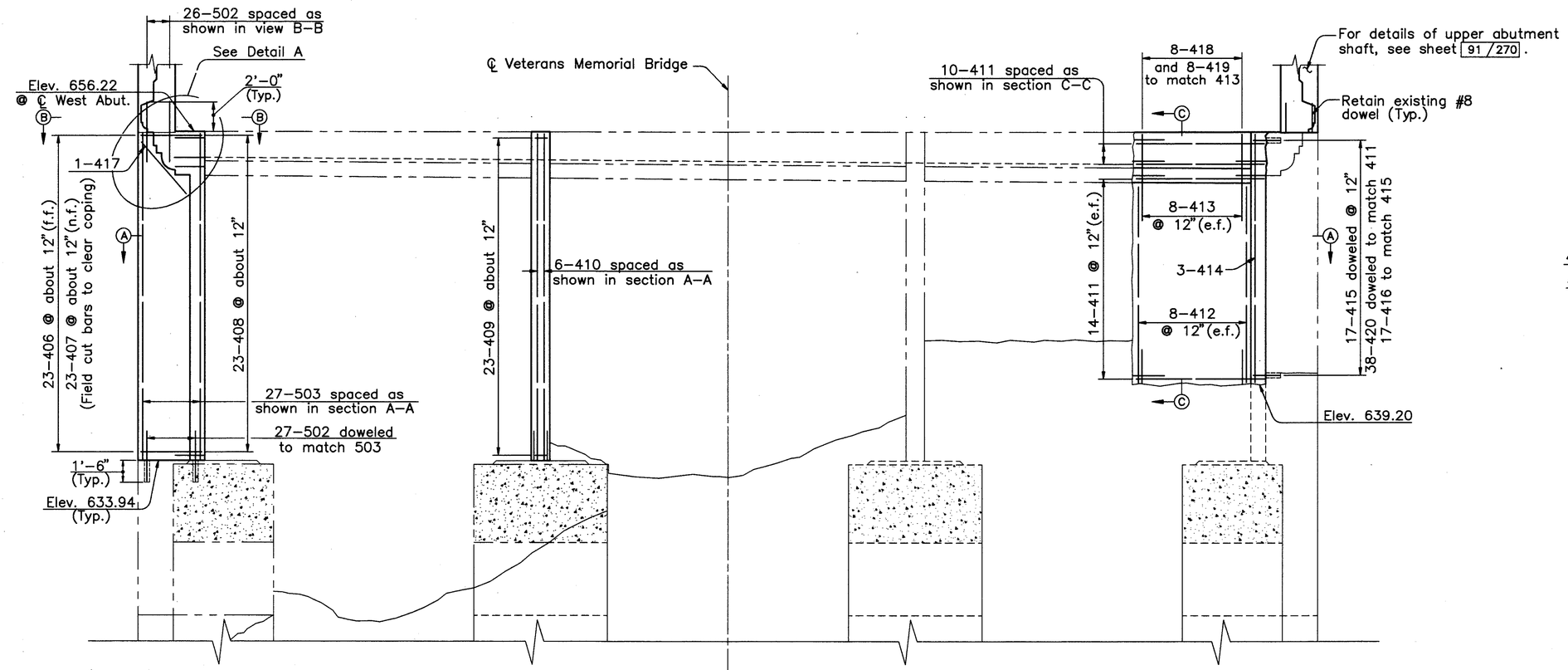

ELEVATION – WEST ABUTMENT
(Looking West)

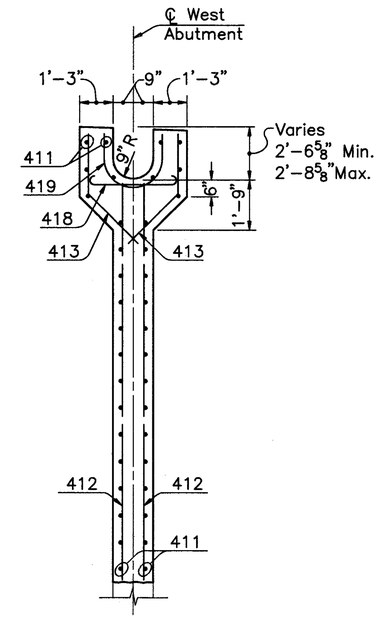

SECTION C–C

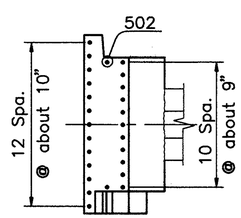

VIEW B–B

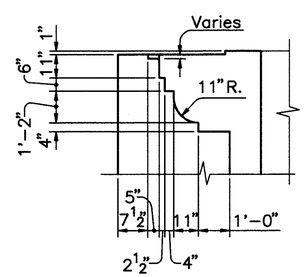

DETAIL A

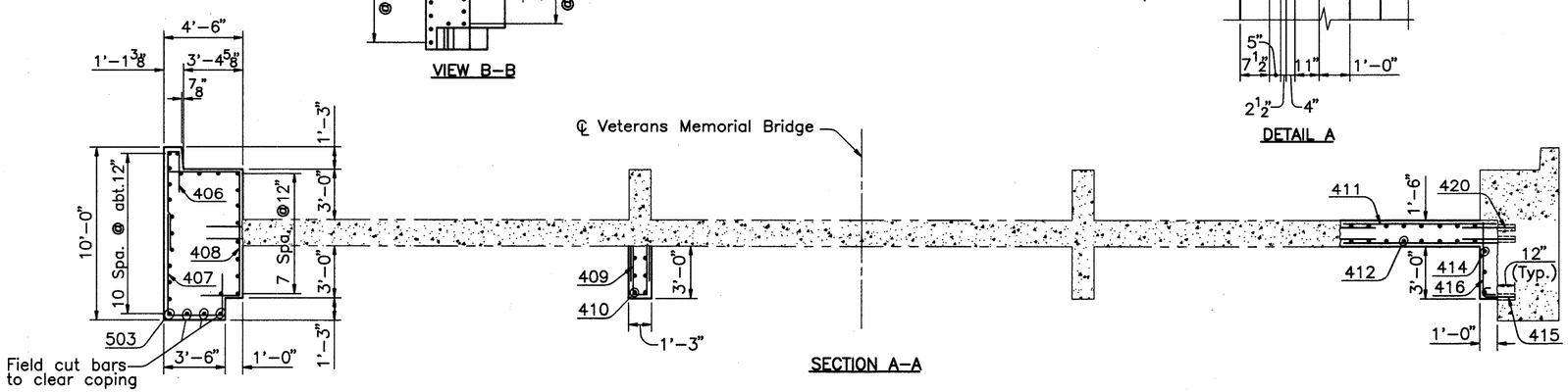

SECTION A–A

ALL REINFORCING BAR MARKS SHALL BE PREFIXED WEA

NOTES:

FOR REMOVAL DETAILS SEE SHEET 53/270.

BAR LAP LENGTH SHALL BE 1'–6" MINIMUM UNLESS OTHERWISE SPECIFIED.

THE FOLLOWING ABBREVIATIONS ARE USED:
(n.f.) – near face
(f.f.) – far face
(e.f.) – each face

COUNTY BRIDGE NO. 84

HOWARD NEEDLES TAMMEN & BERGENDOFF
ARCHITECTS ENGINEERS PLANNERS
HNTB

REPLACEMENT DETAILS
WEST ABUTMENT
BR. NO. CUY – 6 – 1499
REHABILITATION OF
VETERANS MEMORIAL BRIDGE
(U.S. 6, 20, 42 & S.R. 3 OVER CUYAHOGA RIVER)
CLEVELAND CUYAHOGA COUNTY OHIO

DRAWN B.E.B.	TRACED B.E.B.	CHECKED W.D.D.	REVIEWED C.A.B.	REVISED
DATE 1/31/94	DATE 1/31/94	DATE 2/9/94	DATE 4/6/94	SHEET 76/270

\11646\WABUT

FHWA REGION	STATE	PROJECT	
5	OHIO		

209 / 412

CUYAHOGA COUNTY
CUY – 6 – 14.99

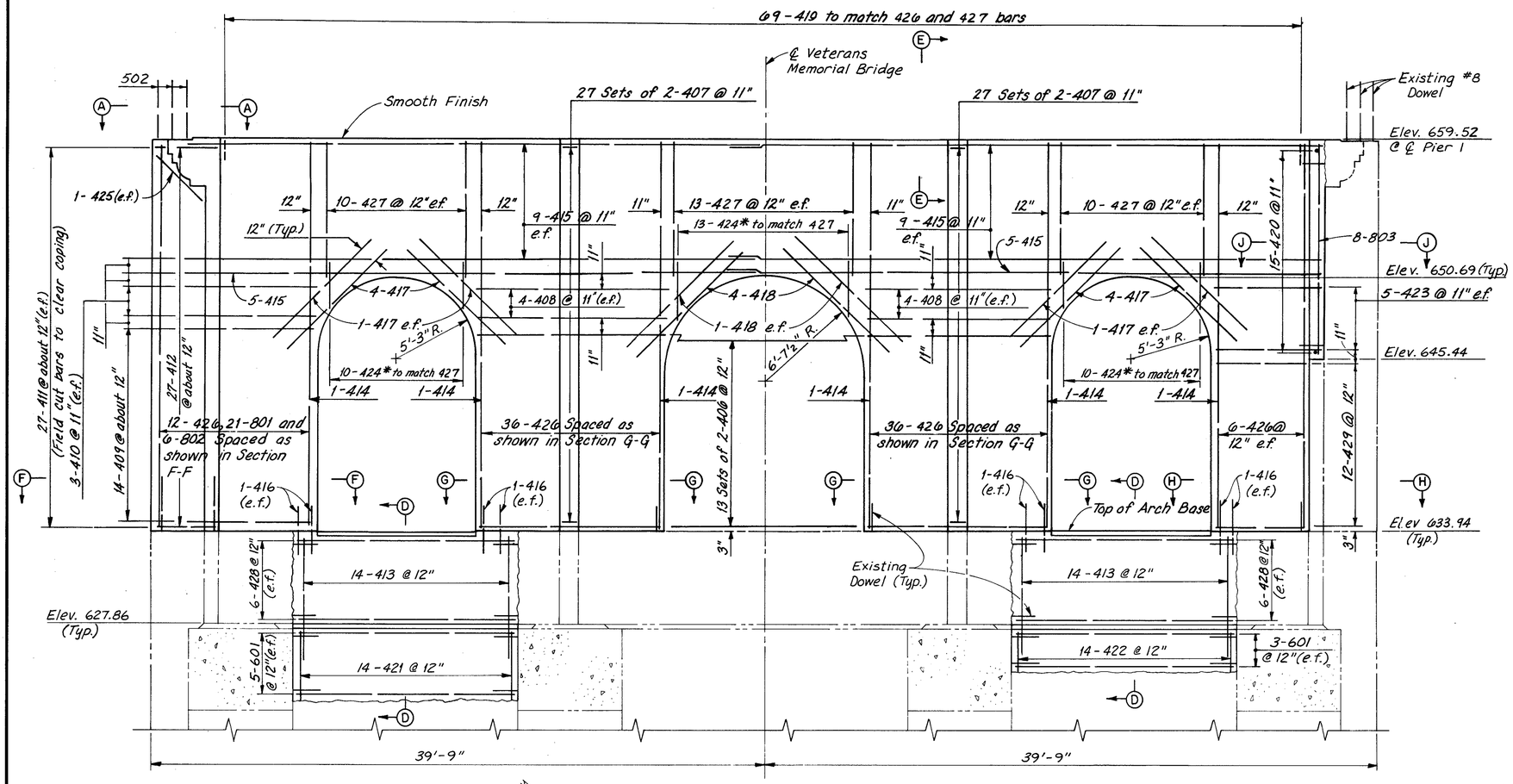

ELEVATION
(Looking West)

* Note Lap length between 424 and 427 bars is not critical

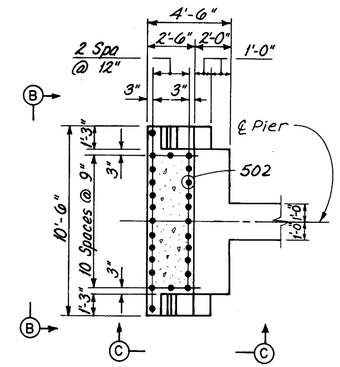

VIEW A-A

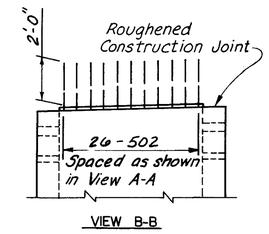

VIEW B-B

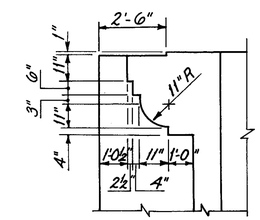

VIEW C-C

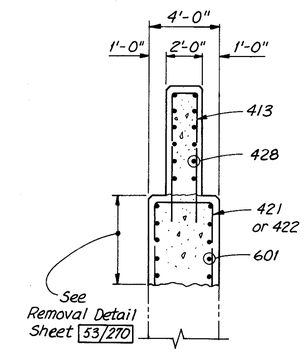

SECTION D-D

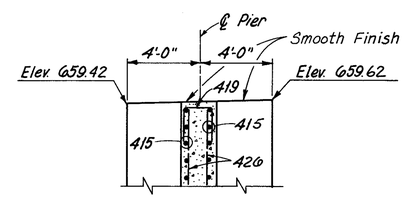

SECTION E-E

NOTES:

FOR REMOVAL DETAILS SEE SHEET 53 / 270

FOR UPPER PIER SHAFT DETAILS SEE SHEET 91 / 270

BAR LAP LENGTH SHALL BE 1'–6" MINIMUM UNLESS OTHERWISE SPECIFIED.

THE FOLLOWING ABBREVIATIONS ARE USED:

E.F. – EACH FACE

SPA. – SPACES

ALL REINFORCING MARKS SHALL BE PREFIXED IEP

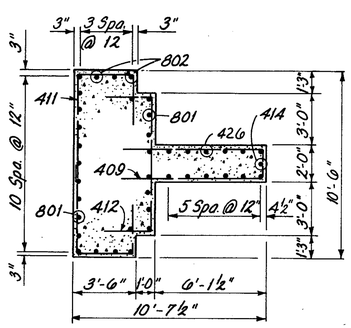

SECTION F-F

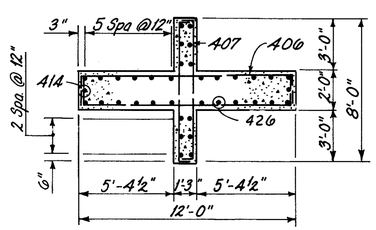

SECTION G-G

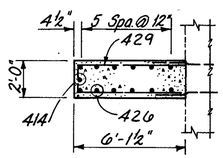

SECTION H-H

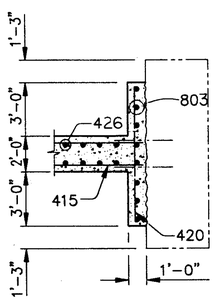

SECTION J–J

COUNTY BRIDGE NO. 84

HOWARD NEEDLES TAMMEN & BERGENDOFF
ARCHITECTS ENGINEERS PLANNERS
HNTB

REPLACEMENT DETAILS
PIER 1
BR. NO. CUY – 6 – 1499
REHABILITATION OF
VETERANS MEMORIAL BRIDGE
(U.S. 6, 20, 42 & S.R. 3 OVER CUYAHOGA RIVER)

CLEVELAND CUYAHOGA COUNTY OHIO

DRAWN C.K.B.	TRACED J.T.	CHECKED W.E.B.	REVIEWED C.A.B.	REVISED
DATE 9/20/92	DATE 9/24/92	DATE 12/7/92	DATE 3/31/94	SHEET 77 / 270

FHWA REGION	STATE	PROJECT	
5	OHIO		

210/412

CUYAHOGA COUNTY
CUY – 6 – 14.99

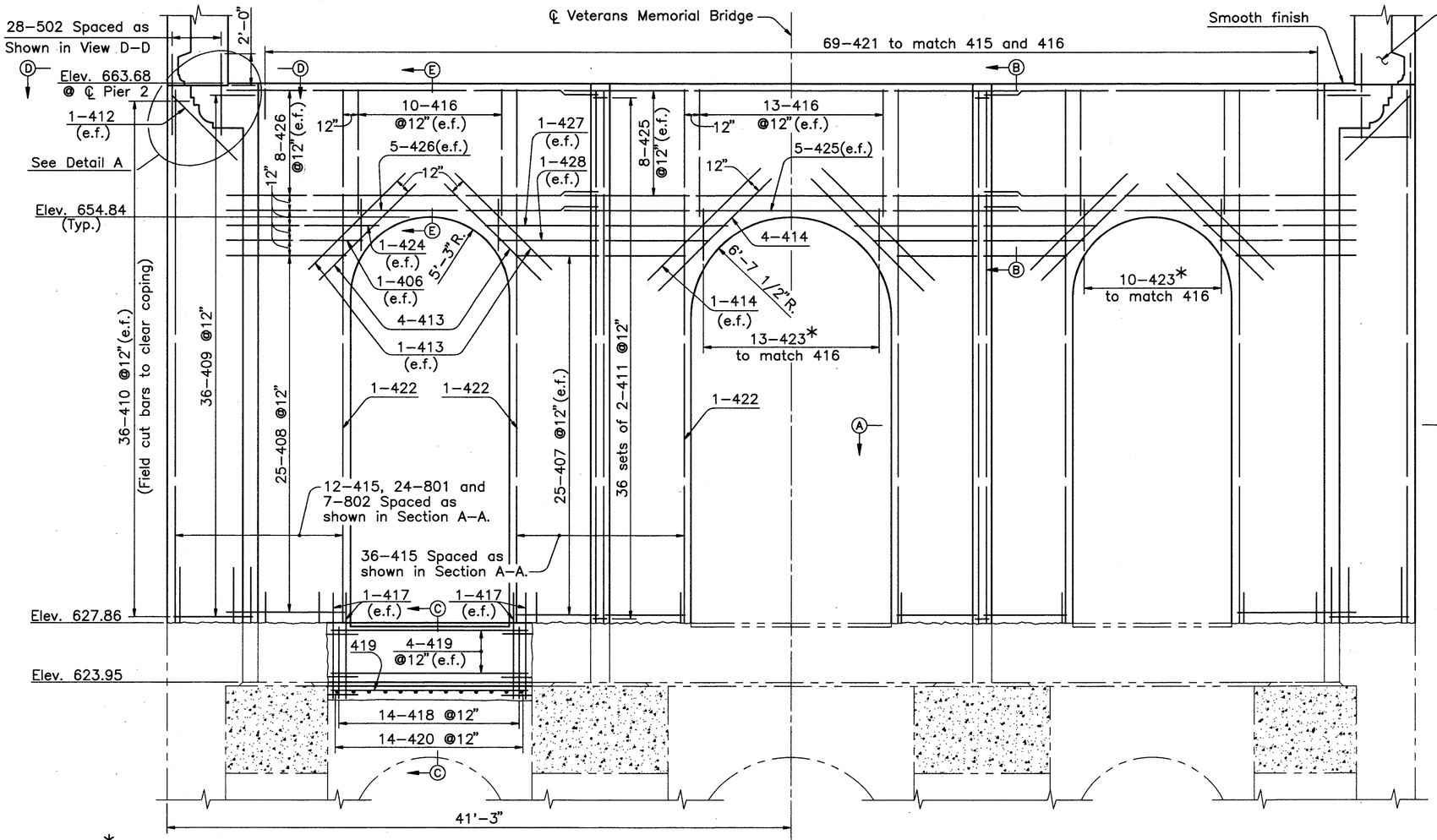

ELEVATION – PIER 2
(Looking west)

* Note:
Lap length between 423 and 416 bars is not critical.

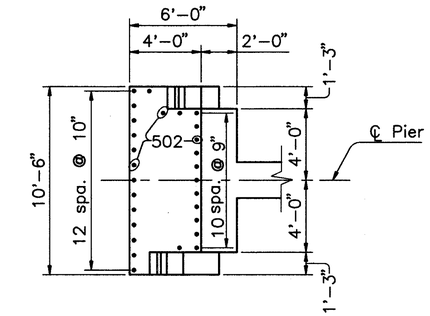

VIEW D–D

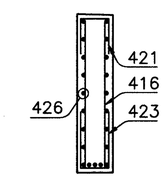

SECTION E–E

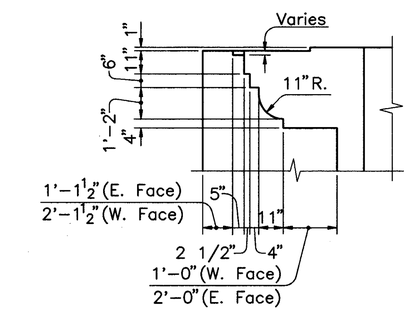

DETAIL A

NOTES:
FOR REMOVAL DETAILS SEE SHEET 54/270.

ALL DIMENSIONS AND REINFORCEMENT NOT SHOWN ARE SYMMETRICAL ABOUT ℄ VETERANS MEMORIAL BRIDGE.

BAR LAP LENGTH SHALL BE 1'–6" MINIMUM UNLESS OTHERWISE SPECIFIED.

THE FOLLOWING ABBREVIATIONS ARE USED:
(e.f.) – each face
spa. – spaces
eq. – equal

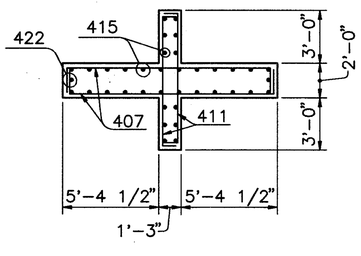

SECTION A–A

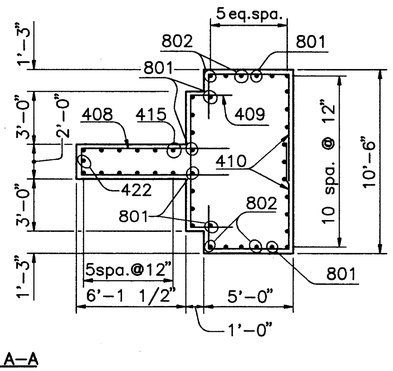

ALL REINFORCING BAR MARKS SHALL BE PREFIXED 2EP.

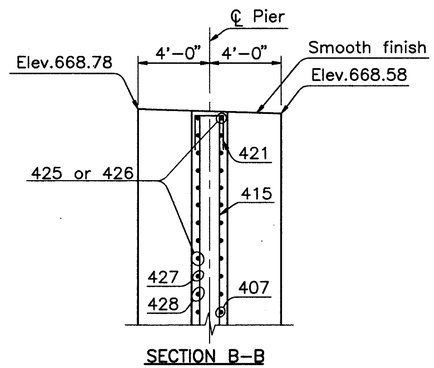

SECTION B–B

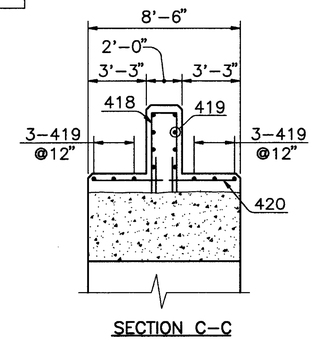

SECTION C–C

COUNTY BRIDGE NO. 84

HOWARD NEEDLES TAMMEN & BERGENDOFF
ARCHITECTS ENGINEERS PLANNERS
HNTB

REPLACEMENT DETAILS
PIER 2
BR. NO. CUY – 6 – 1499
REHABILITATION OF
VETERANS MEMORIAL BRIDGE
(U.S. 6, 20, 42 & S.R. 3 OVER CUYAHOGA RIVER)
CLEVELAND CUYAHOGA COUNTY OHIO

DRAWN B.E.B.	TRACED B.E.B.	CHECKED W.D.D.	REVIEWED C.A.B.	REVISED
DATE 8/20/93	DATE 8/20/93	DATE 2/14/94	DATE 4/6/94	SHEET 78/270

\11646\REPP2

FHWA REGION	STATE	PROJECT	
5	OHIO		

211 / 412

CUYAHOGA COUNTY
CUY – 6 – 14.99

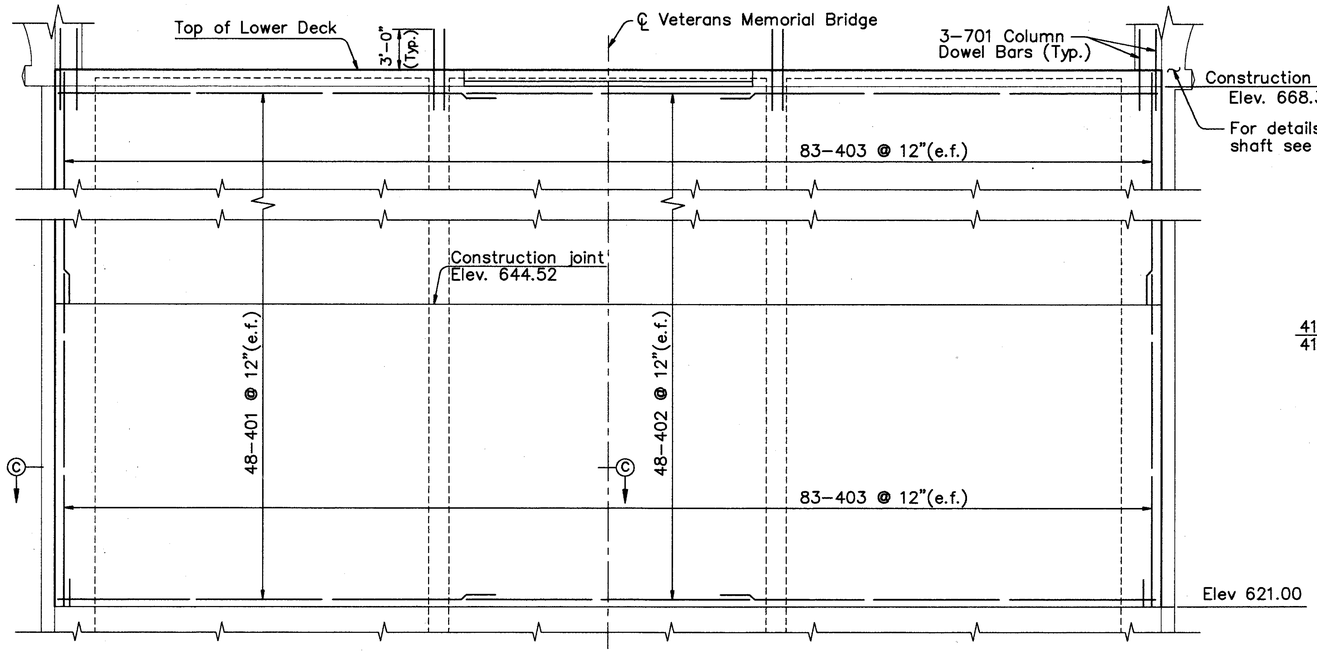

ELEVATION – EAST FACE

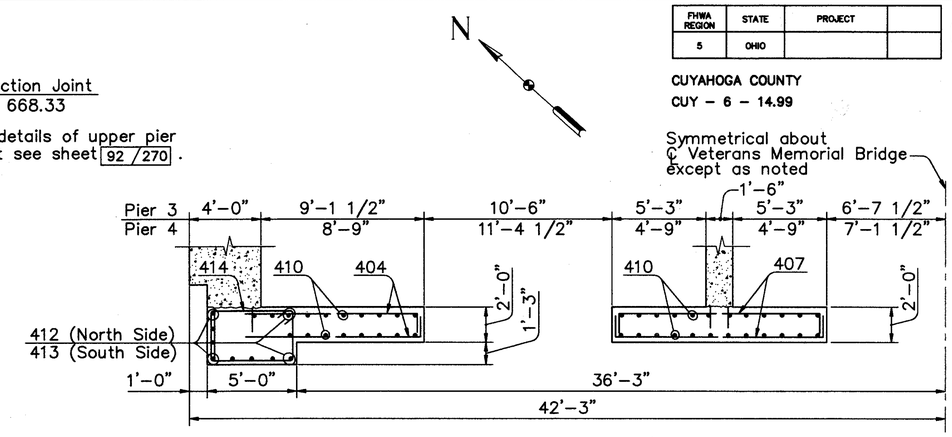

SECTION A–A

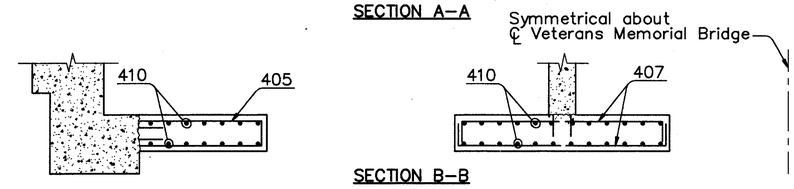

SECTION B–B

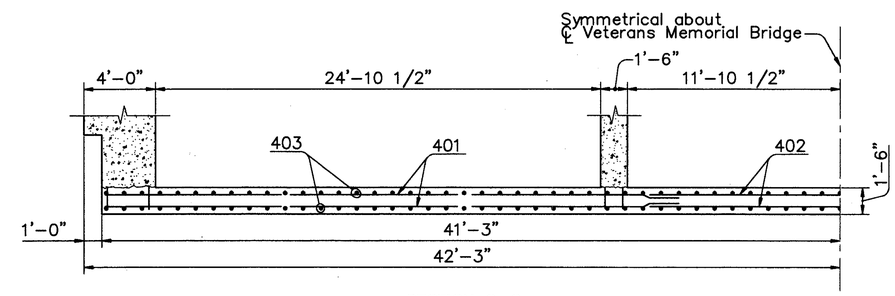

SECTION C–C

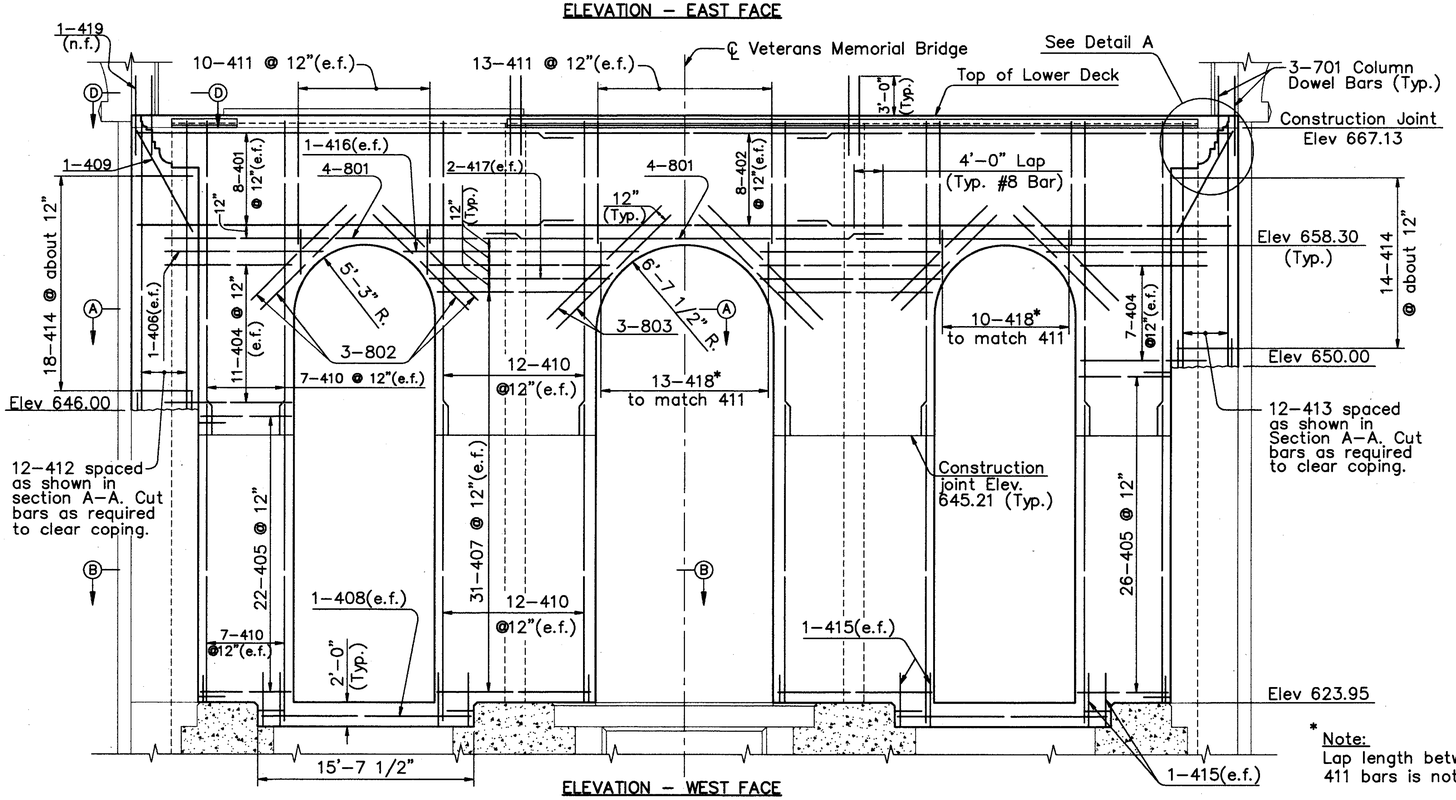

ELEVATION – WEST FACE

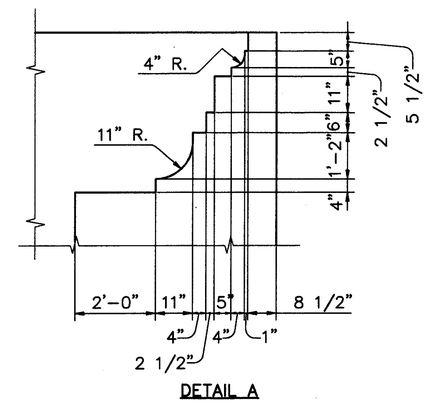

DETAIL A

*Note:
Lap length between 418 and 411 bars is not critical.

ALL REINFORCING BAR MARKS SHALL BE PREFIXED 3EP

NOTES:
FOR VIEW D–D SEE SHEET 80/270.
FOR REMOVAL DETAILS SEE SHEET 55/270.
ALL DIMENSIONS AND REINFORCEMENT NOT SHOWN ARE SYMMETRICAL ABOUT ℄ VETERANS MEMORIAL BRIDGE.
BAR LAP LENGTH SHALL BE 1'-6" MINIMUM, UNLESS OTHERWISE SPECIFIED.
THE FOLLOWING ABBREVIATIONS ARE USED:
(e.f.) – each face
(n.f.) – near face

COUNTY BRIDGE NO. 84

HOWARD NEEDLES TAMMEN & BERGENDOFF
ARCHITECTS ENGINEERS PLANNERS
HNTB

REPLACEMENT DETAILS
PIER 3
BR. NO. CUY – 6 – 1499
REHABILITATION OF
VETERANS MEMORIAL BRIDGE
(U.S. 6, 20, 42 & S.R. 3 OVER CUYAHOGA RIVER)
CLEVELAND CUYAHOGA COUNTY OHIO

DRAWN B.E.B.	TRACED B.E.B.	CHECKED W.D.D.	REVIEWED C.A.B.	REVISED
DATE 6/26/93	DATE 6/26/93	DATE 3/3/94	DATE 4/8/94	SHEET 79/270

\11646\REPP3.DWG

FHWA REGION	STATE	PROJECT	
5	OHIO		

212/412

CUYAHOGA COUNTY
CUY – 6 – 14.99

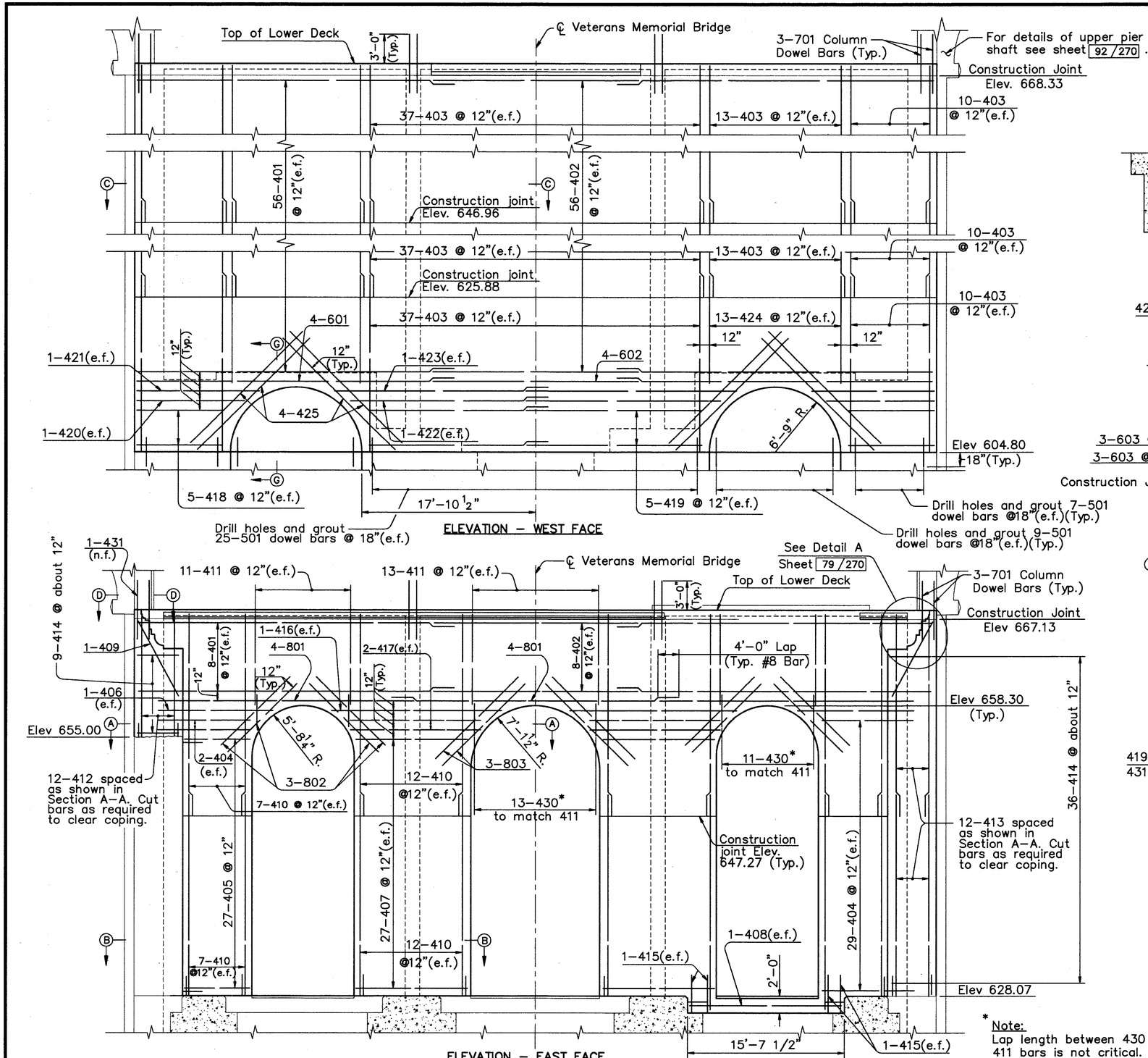

ELEVATION – WEST FACE

ELEVATION – EAST FACE

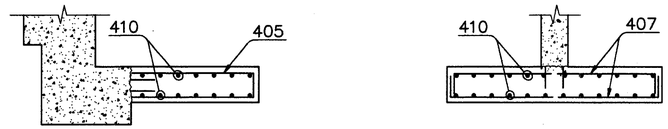

SECTION B–B
(South Side only)

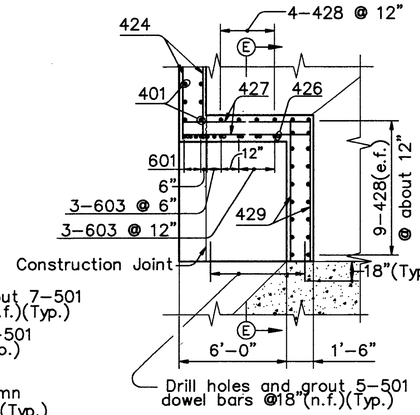

SECTION G–G

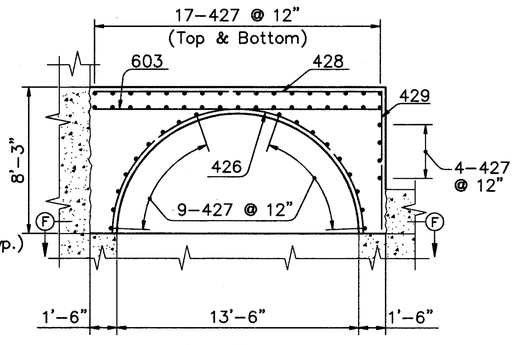

SECTION E–E

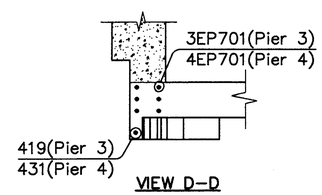

VIEW D–D

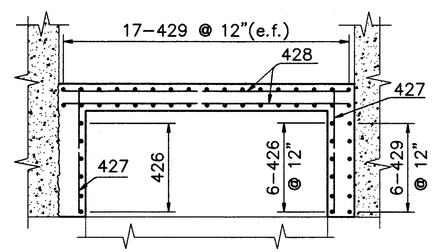

SECTION F–F

ALL REINFORCING BAR MARKS SHALL BE PREFIXED 4EP

NOTES:
FOR REMOVAL DETAILS SEE SHEET 56/270.

ALL DIMENSIONS AND REINFORCEMENT NOT SHOWN ARE SYMMETRICAL ABOUT ℄ VETERANS MEMORIAL BRIDGE.

FOR SECTIONS A–A and C–C SEE SHEET 79/270.

BAR LAP LENGTH SHALL BE 1'-6" MINIMUM, UNLESS OTHERWISE SPECIFIED.

THE FOLLOWING ABBREVIATIONS ARE USED:
(n.f.) – near face
(e.f.) – each face

* Note:
Lap length between 430 and 411 bars is not critical.

COUNTY BRIDGE NO. 84

HOWARD NEEDLES TAMMEN & BERGENDOFF
ARCHITECTS ENGINEERS PLANNERS
HNTB

REPLACEMENT DETAILS
PIER 4
BR. NO. CUY – 6 – 1499
REHABILITATION OF
VETERANS MEMORIAL BRIDGE
(U.S. 6, 20, 42 & S.R. 3 OVER CUYAHOGA RIVER)

CLEVELAND CUYAHOGA COUNTY OHIO

DRAWN B.E.B.	TRACED B.E.B.	CHECKED W.D.D.	REVIEWED C.A.B.	REVISED
DATE 6/26/93	DATE 6/26/93	DATE 3/7/94	DATE 4/6/94	SHEET 80/270

\11646\REPP4.DWG

FHWA REGION	STATE	PROJECT	
5	OHIO		

213/412

CUYAHOGA COUNTY
CUY – 6 – 14.99

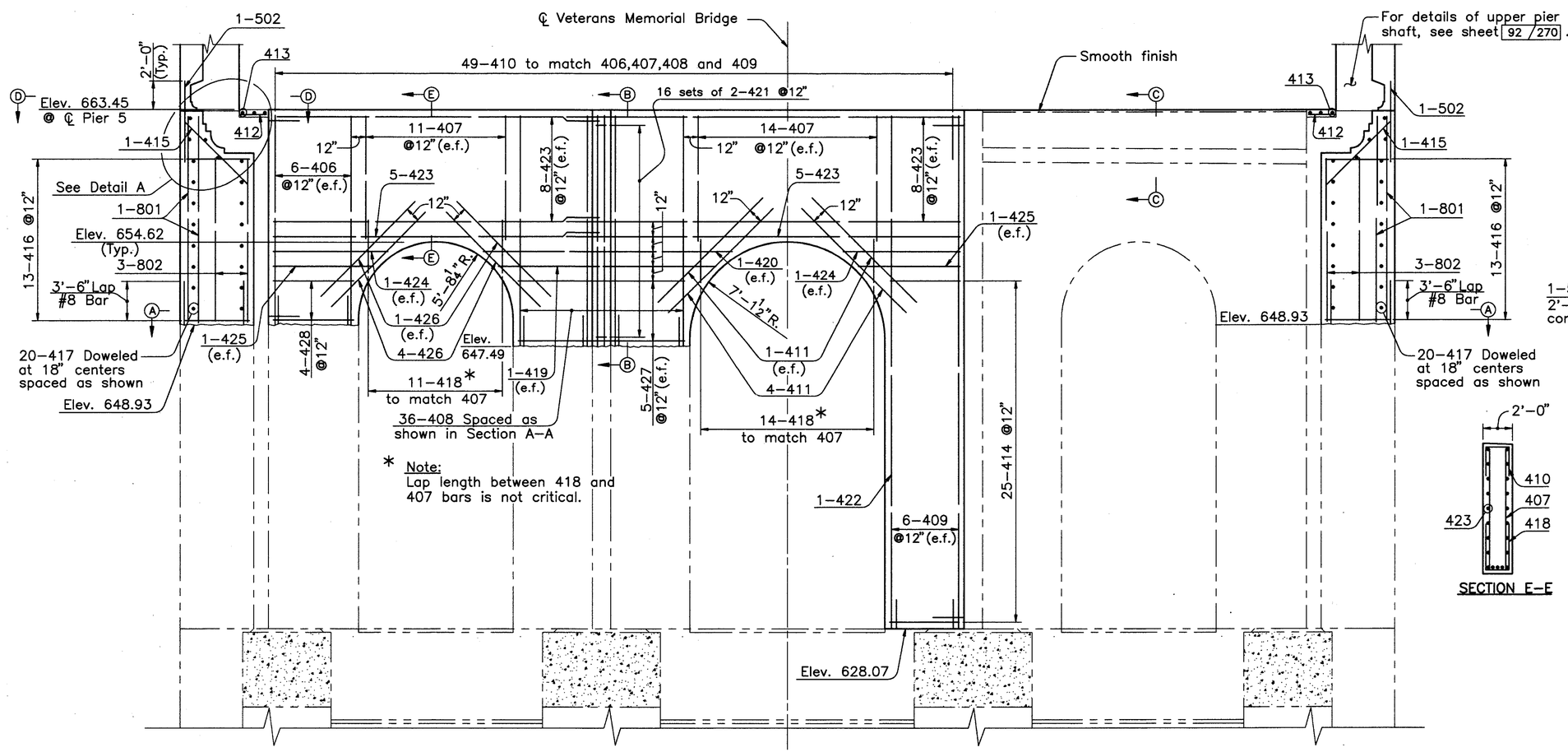

* Note:
Lap length between 418 and 407 bars is not critical.

ELEVATION – PIER 5
(Looking East)

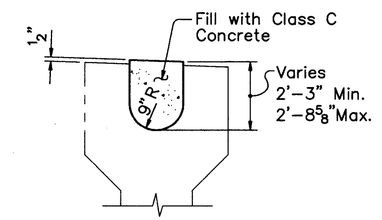

SECTION C–C

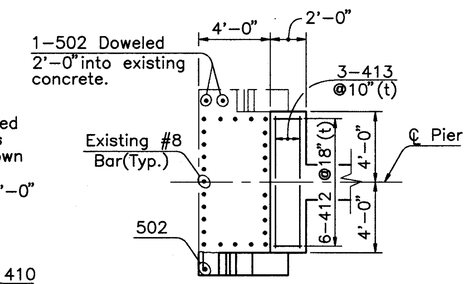

VIEW D–D
(Typical, North and South Bays)

SECTION E–E

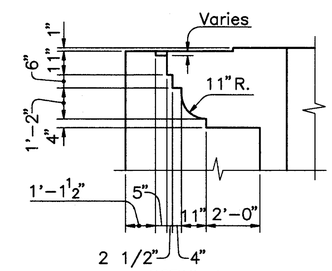

DETAIL A

ALL REINFORCING BAR MARKS SHALL BE PREFIXED 5EP.

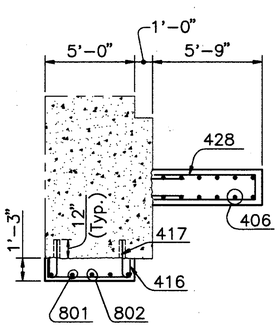

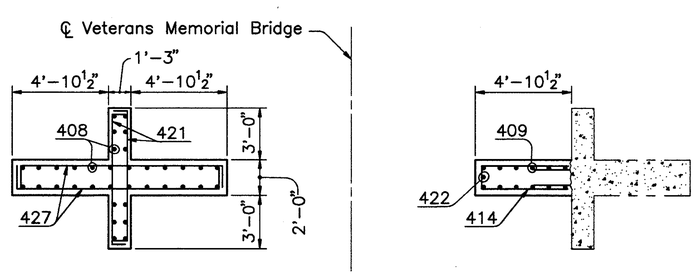

SECTION A–A

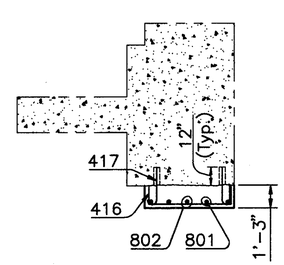

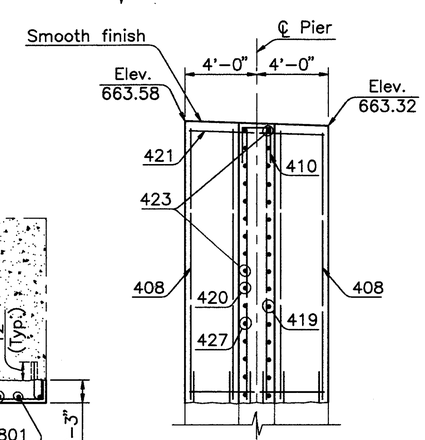

SECTION B–B

NOTES:

FOR REMOVAL DETAILS SEE SHEET 54/270.

BAR LAP LENGTH SHALL BE 1'–6" MINIMUM UNLESS OTHERWISE SPECIFIED.

THE FOLLOWING ABBREVIATIONS ARE USED:
(e.f.) – each face
(t) – top

COUNTY BRIDGE NO. 84

HOWARD NEEDLES TAMMEN & BERGENDOFF
ARCHITECTS ENGINEERS PLANNERS
HNTB

REPLACEMENT DETAILS
PIER 5
BR. NO. CUY – 6 – 1499
REHABILITATION OF
VETERANS MEMORIAL BRIDGE
(U.S. 6, 20, 42 & S.R. 3 OVER CUYAHOGA RIVER)
CLEVELAND CUYAHOGA COUNTY OHIO

DRAWN B.E.B.	TRACED B.E.B.	CHECKED W.D.D.	REVIEWED C.A.B.	REVISED
DATE 8/26/93	DATE 8/26/93	DATE 2/15/94	DATE 3/31/94	SHEET 81/270

\11646\REPP5

FHWA REGION	STATE	PROJECT	
5	OHIO		

214/412

CUYAHOGA COUNTY
CUY – 6 – 14.99

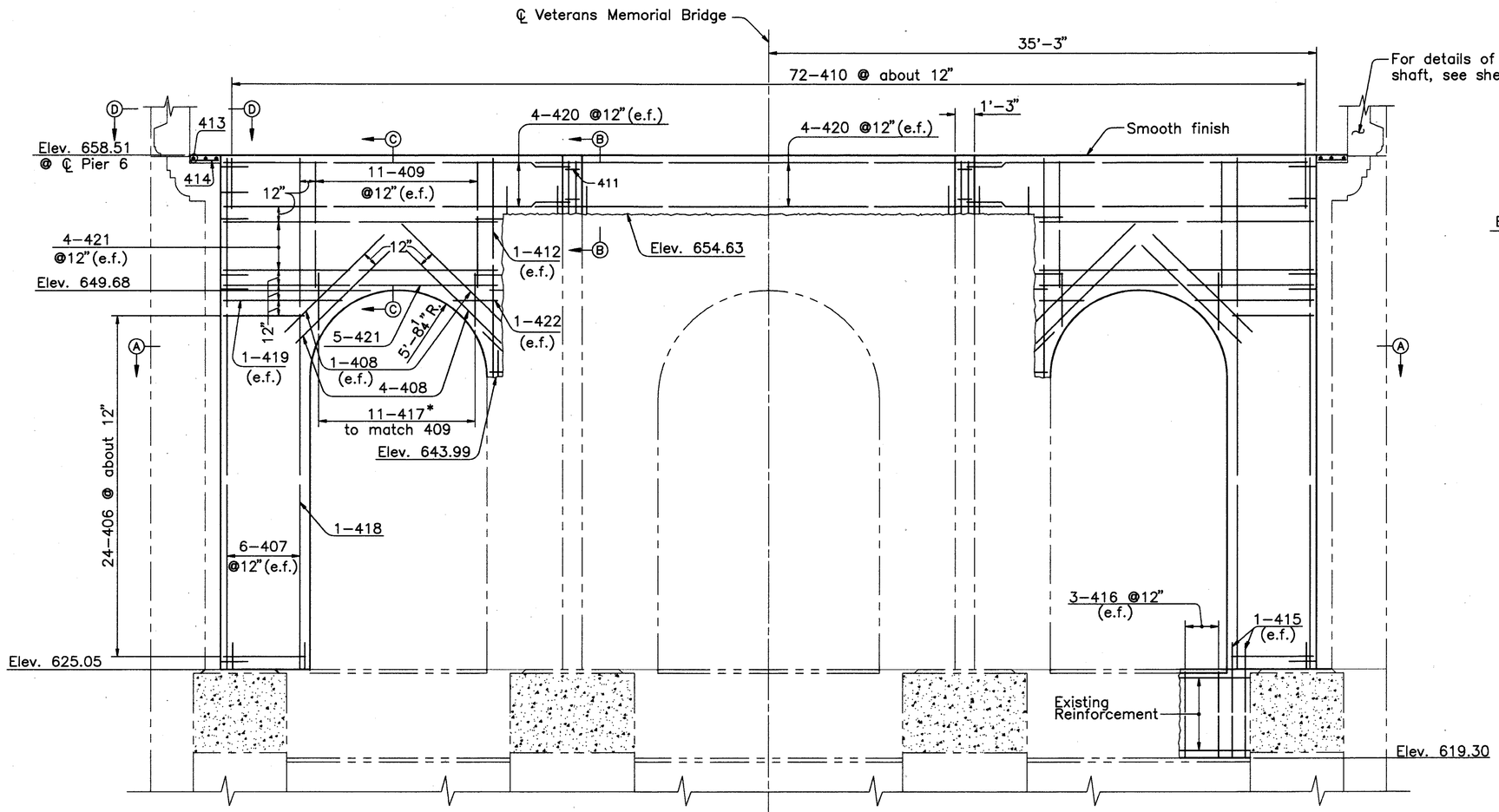

ELEVATION – PIER 6
(Looking East)

* Note:
Lap length between 417 and 409 bars is not critical.

ALL REINFORCING BAR MARKS SHALL BE PREFIXED 6EP

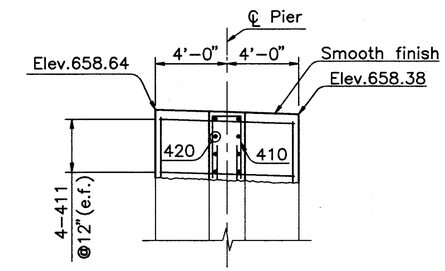

SECTION B–B

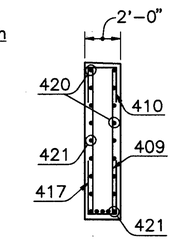

SECTION C–C

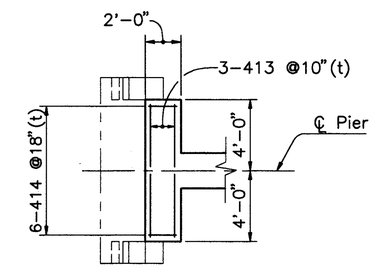

VIEW D–D

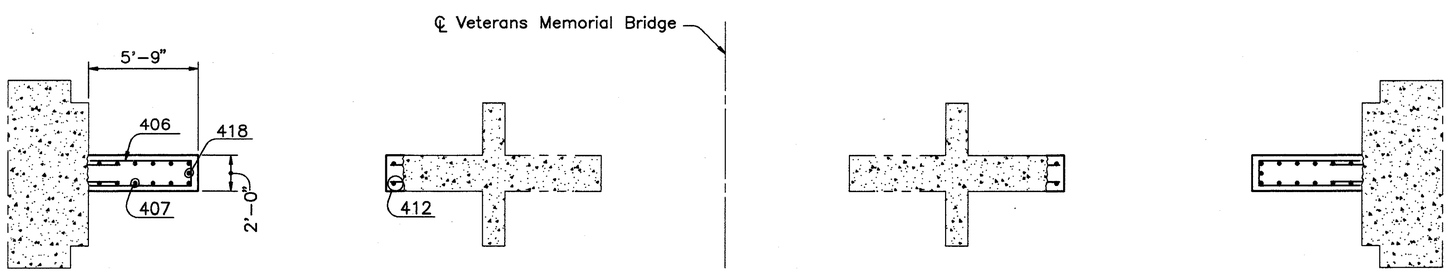

SECTION A–A

NOTES:

ALL DIMENSIONS AND REINFORCEMENT NOT SHOWN ARE SYMMETRICAL ABOUT ℄ VETERANS MEMORIAL BRIDGE.

FOR REMOVAL DETAILS SEE SHEET 57/270.

BAR LAP LENGTH SHALL BE 1'–6" MINIMUM UNLESS OTHERWISE SPECIFIED.

THE FOLLOWING ABBREVIATIONS ARE USED:
(e.f.) – each face
(t) – top

COUNTY BRIDGE NO. 84

HOWARD NEEDLES TAMMEN & BERGENDOFF
ARCHITECTS ENGINEERS PLANNERS
HNTB

REPLACEMENT DETAILS
PIER 6
BR. NO. CUY – 6 – 1499
REHABILITATION OF
VETERANS MEMORIAL BRIDGE
(U.S. 6, 20, 42 & S.R. 3 OVER CUYAHOGA RIVER)
CLEVELAND CUYAHOGA COUNTY OHIO

DRAWN B.E.B.	TRACED B.E.B.	CHECKED W.D.D.	REVIEWED C.A.B.	REVISED
DATE 8/27/93	DATE 8/27/93	DATE 2/16/94	DATE 3/31/94	SHEET 82/270

\11646\REPP6

FHWA REGION	STATE	PROJECT	
5	OHIO		

215 / 412

CUYAHOGA COUNTY
CUY – 6 – 14.99

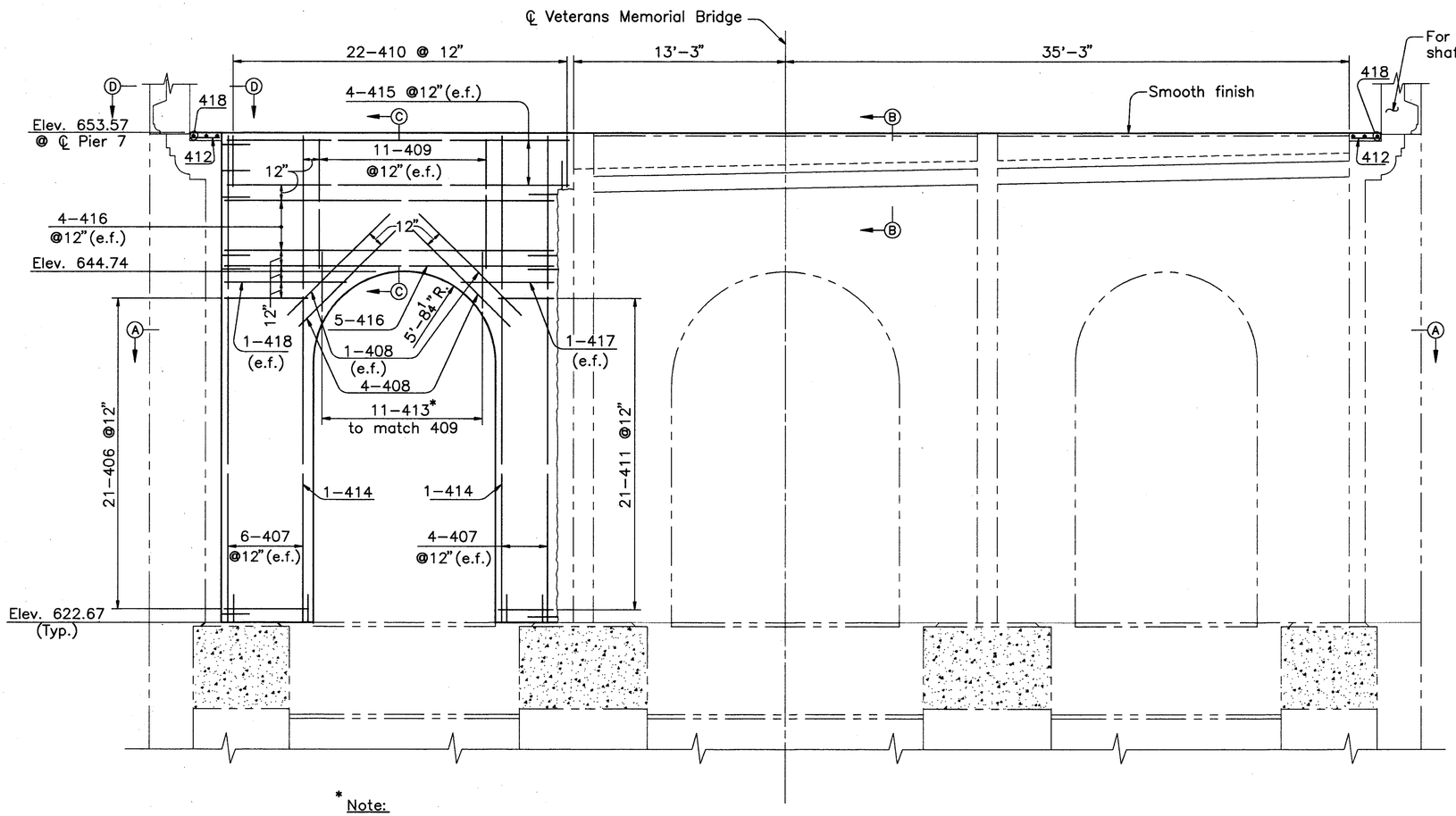

* Note:
Lap length between 413 and 409 bars is not critical.

ELEVATION – PIER 7
(Looking East)

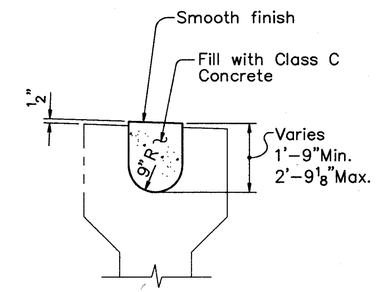

SECTION B–B

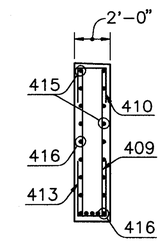

SECTION C–C

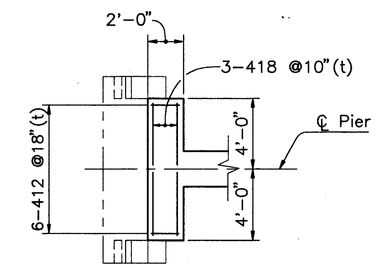

VIEW D–D
(Typical, North and South Bays)

ALL REINFORCING BAR MARKS SHALL BE PREFIXED 7EP

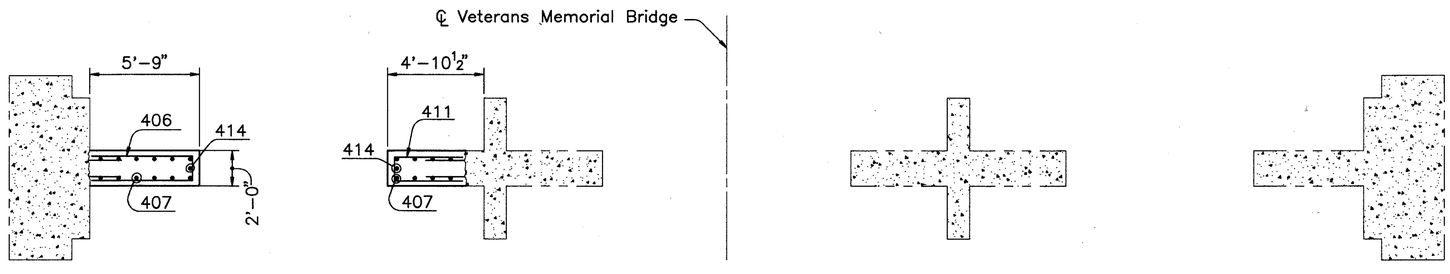

SECTION A–A

NOTES:

FOR REMOVAL DETAILS SEE SHEET 57 / 270.

BAR LAP LENGTH SHALL BE 1'–6" MINIMUM UNLESS OTHERWISE SPECIFIED.

THE FOLLOWING ABBREVIATIONS ARE USED:
(e.f.) – each face
(t) – top

COUNTY BRIDGE NO. 84

HOWARD NEEDLES TAMMEN & BERGENDOFF
ARCHITECTS ENGINEERS PLANNERS
HNTB

REPLACEMENT DETAILS
PIER 7
BR. NO. CUY – 6 – 1499
REHABILITATION OF
VETERANS MEMORIAL BRIDGE
(U.S. 6, 20, 42 & S.R. 3 OVER CUYAHOGA RIVER)
CLEVELAND CUYAHOGA COUNTY OHIO

DRAWN B.E.B.	TRACED B.E.B	CHECKED W.D.D.	REVIEWED C.A.B.	REVISED
DATE 9/9/93	DATE 9/9/93	DATE 2/17/94	DATE 3/31/94	SHEET 83 / 270

\11646\REPP7

FHWA REGION	STATE	PROJECT	
5	OHIO		

216/412

CUYAHOGA COUNTY
CUY – 6 – 14.99

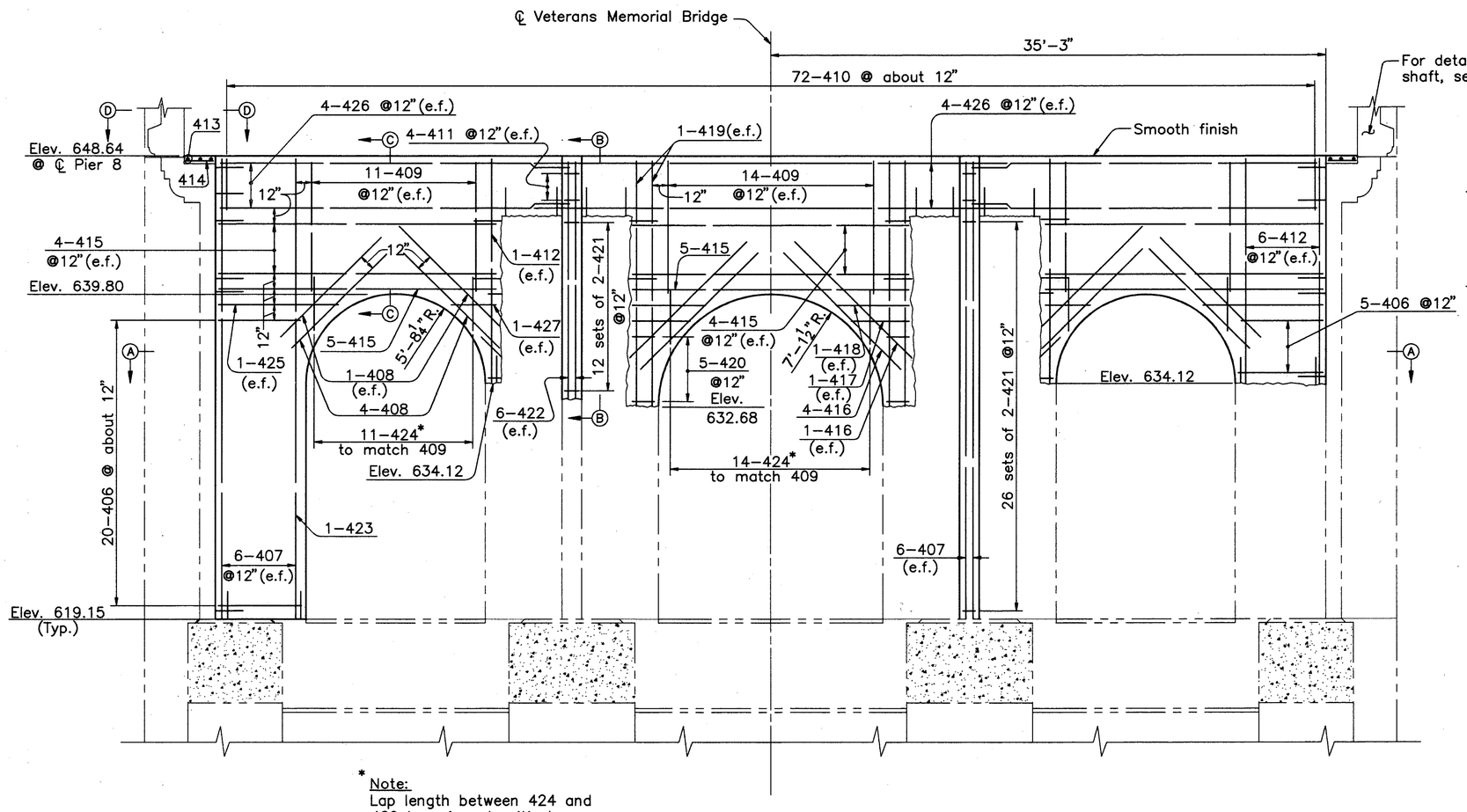

* Note:
Lap length between 424 and 409 bars is not critical.

ELEVATION – PIER 8
(Looking East)

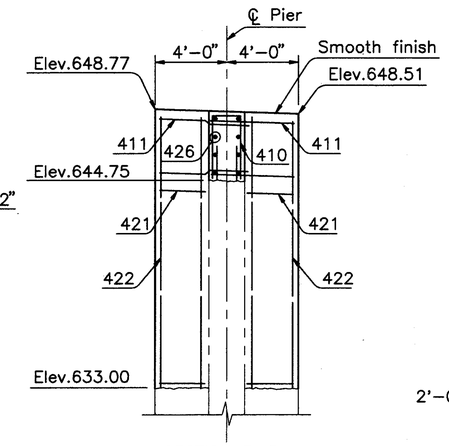

SECTION B–B

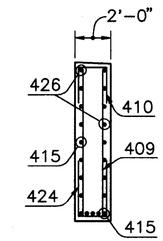

SECTION C–C

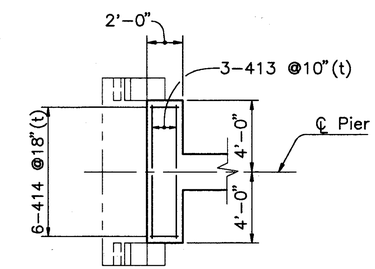

VIEW D–D

ALL REINFORCING BAR MARKS SHALL BE PREFIXED 8EP

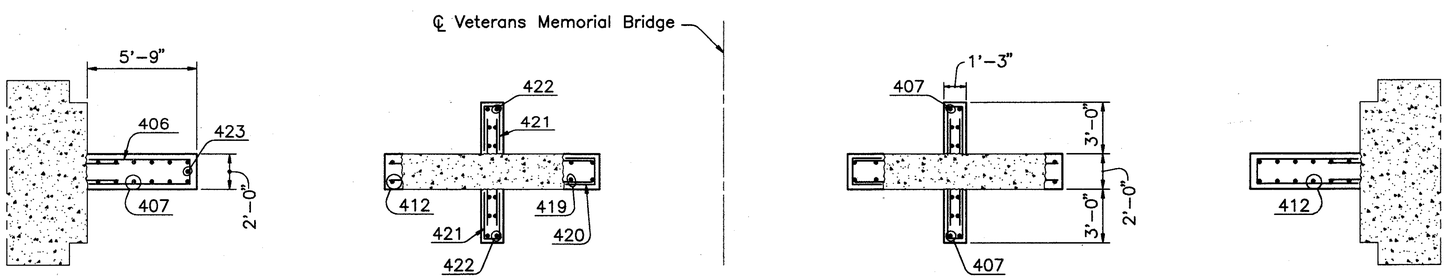

SECTION A–A

NOTES:

ALL DIMENSIONS AND REINFORCEMENT NOT SHOWN ARE SYMMETRICAL ABOUT ℄ VETERANS MEMORIAL BRIDGE.

FOR REMOVAL DETAILS SEE SHEET 58/270.

BAR LAP LENGTH SHALL BE 1'–6" MINIMUM UNLESS OTHERWISE SPECIFIED.

THE FOLLOWING ABBREVIATIONS ARE USED:
(e.f.) – each face
(t) – top

COUNTY BRIDGE NO. 84

HOWARD NEEDLES TAMMEN & BERGENDOFF
ARCHITECTS ENGINEERS PLANNERS
HNTB

REPLACEMENT DETAILS
PIER 8
BR. NO. CUY – 6 – 1499
REHABILITATION OF
VETERANS MEMORIAL BRIDGE
(U.S. 6, 20, 42 & S.R. 3 OVER CUYAHOGA RIVER)

CLEVELAND CUYAHOGA COUNTY OHIO

DRAWN B.E.B.	TRACED B.E.B.	CHECKED W.D.D	REVIEWED C.A.B.	REVISED
DATE 9/9/93	DATE 9/9/93	DATE 2/18/94	DATE 3/31/94	SHEET 84/270

\11646\REPP8

FHWA REGION	STATE	PROJECT	
5	OHIO		

217 / 412

CUYAHOGA COUNTY
CUY – 6 – 14.99

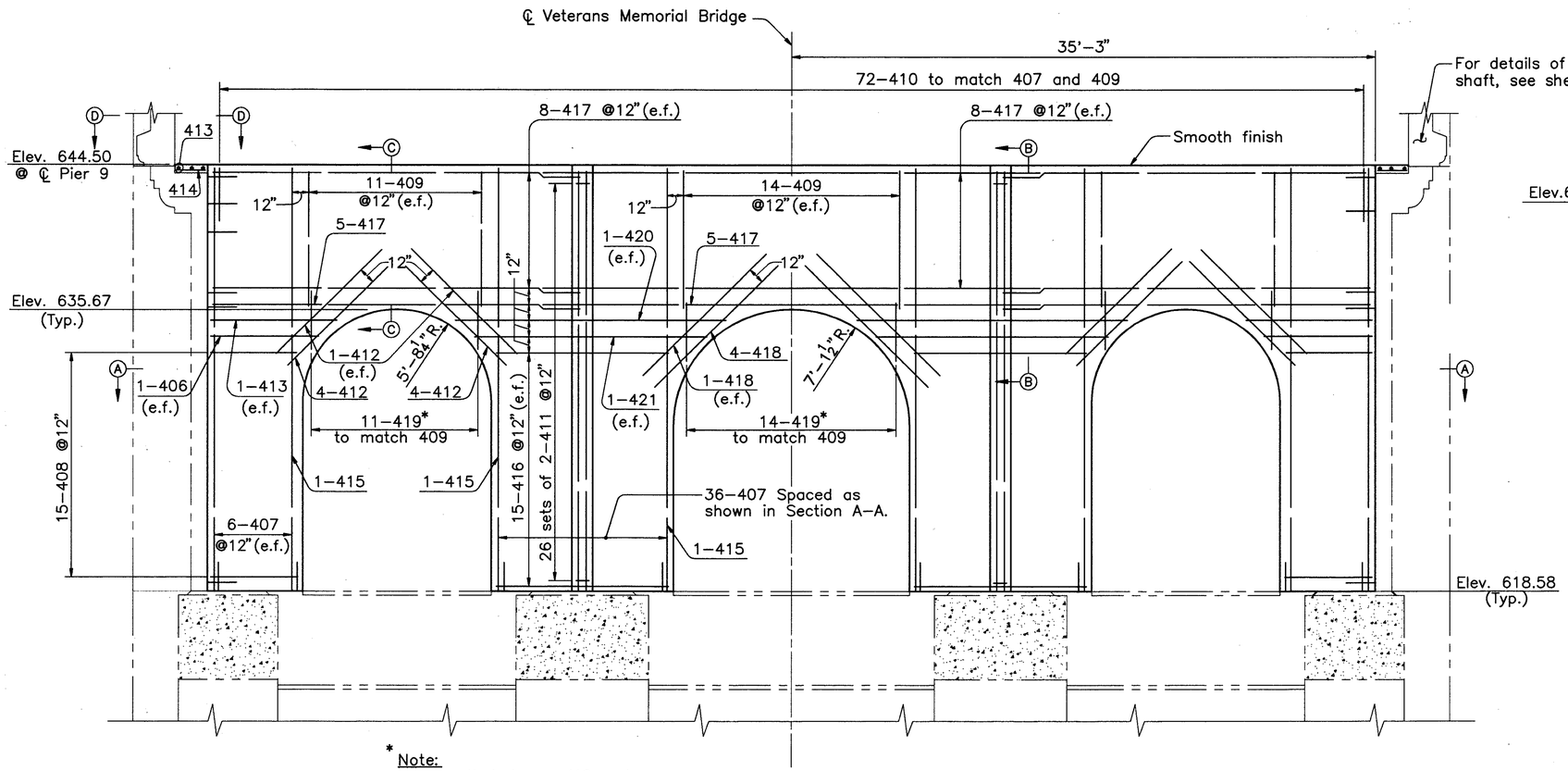

* Note:
Lap length between 419 and 409 bars is not critical.

ELEVATION – PIER 9
(Looking East)

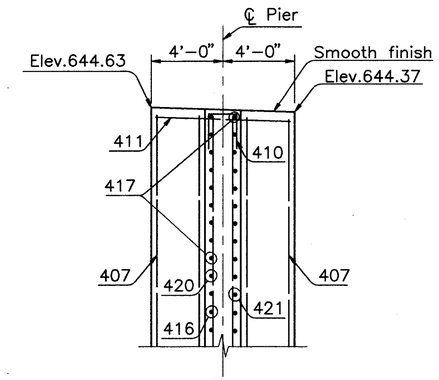

SECTION B–B

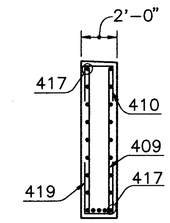

SECTION C–C

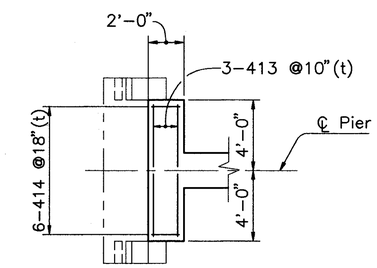

VIEW D–D

ALL REINFORCING BAR MARKS SHALL BE PREFIXED 9EP

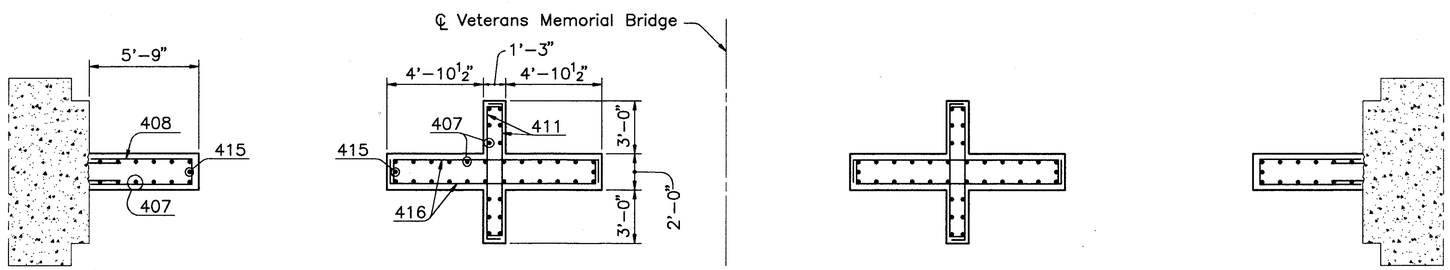

SECTION A–A

NOTES:

ALL DIMENSIONS AND REINFORCEMENT NOT SHOWN ARE SYMMETRICAL ABOUT ℄ VETERANS MEMORIAL BRIDGE.

FOR REMOVAL DETAILS SEE SHEET 58/270.

BAR LAP LENGTH SHALL BE 1'–6" MINIMUM UNLESS OTHERWISE SPECIFIED.

THE FOLLOWING ABBREVIATIONS ARE USED:
(e.f.) – each face
(t) – top

COUNTY BRIDGE NO. 84

HOWARD NEEDLES TAMMEN & BERGENDOFF
ARCHITECTS ENGINEERS PLANNERS
HNTB

REPLACEMENT DETAILS
PIER 9
BR. NO. CUY – 6 – 1499
REHABILITATION OF
VETERANS MEMORIAL BRIDGE
(U.S. 6, 20, 42 & S.R. 3 OVER CUYAHOGA RIVER)
CLEVELAND CUYAHOGA COUNTY OHIO

DRAWN B.E.B.	TRACED B.E.B.	CHECKED W.D.D.	REVIEWED C.A.B.	REVISED
DATE 9/10/93	DATE 9/10/93	DATE 2/21/94	DATE 3/31/94	SHEET 85/270

\11646\REPP9

FHWA REGION	STATE	PROJECT	
5	OHIO		

218 / 412

CUYAHOGA COUNTY
CUY – 6 – 14.99

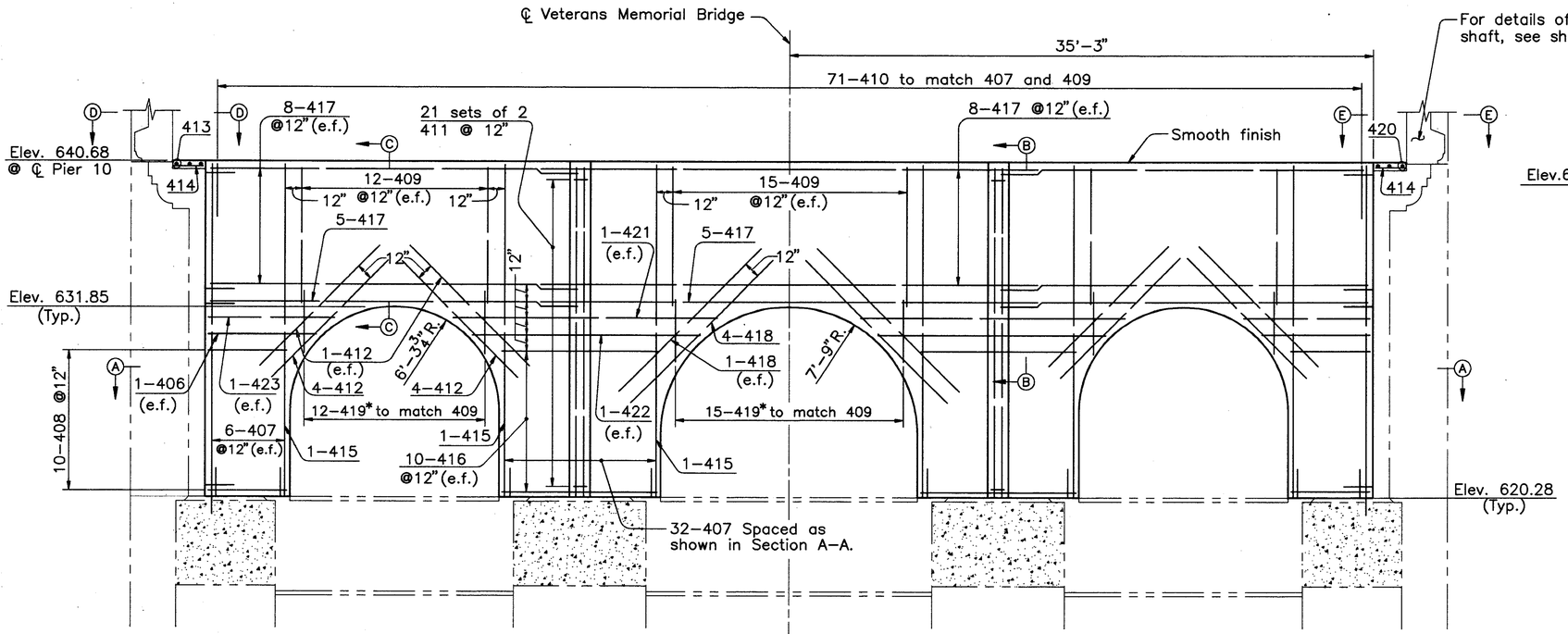

ELEVATION – PIER 10
(Looking East)

* Note:
Lap length between 419 and 409 bars is not critical.

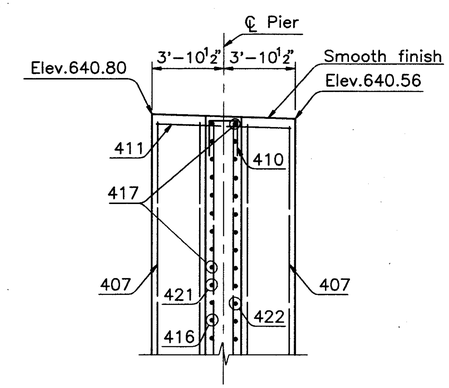

SECTION B–B

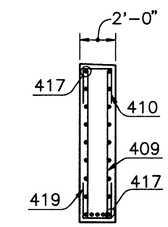

SECTION C–C

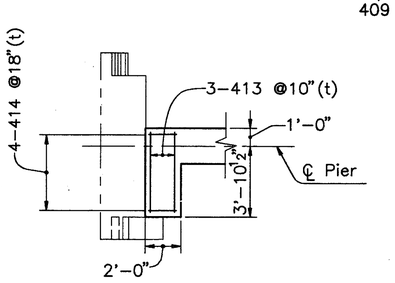

VIEW D–D

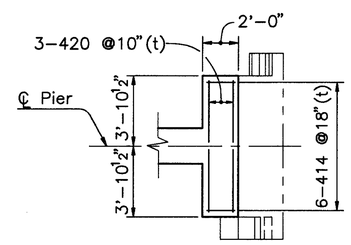

VIEW E–E

ALL REINFORCING BAR MARKS SHALL BE PREFIXED 10EP

NOTES:

ALL DIMENSIONS AND REINFORCEMENT NOT SHOWN ARE SYMMETRICAL ABOUT ℄ VETERANS MEMORIAL BRIDGE.

FOR REMOVAL DETAILS SEE SHEET 59/270.

BAR LAP LENGTH SHALL BE 1'–6" MINIMUM UNLESS OTHERWISE SPECIFIED.

THE FOLLOWING ABBREVIATIONS ARE USED:
(e.f.) – each face
(t) – top

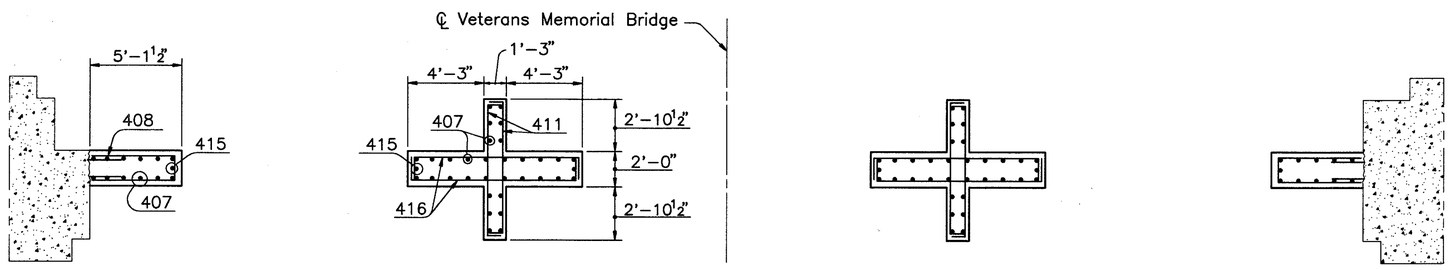

SECTION A–A

COUNTY BRIDGE NO. 84

HOWARD NEEDLES TAMMEN & BERGENDOFF
ARCHITECTS ENGINEERS PLANNERS
HNTB

REPLACEMENT DETAILS
PIER 10
BR. NO. CUY – 6 – 1499
REHABILITATION OF
VETERANS MEMORIAL BRIDGE
(U.S. 6, 20, 42 & S.R. 3 OVER CUYAHOGA RIVER)
CLEVELAND CUYAHOGA COUNTY OHIO

DRAWN B.E.B.	TRACED B.E.B.	CHECKED W.D.D.	REVIEWED C.A.B.	REVISED
DATE 9/11/93	DATE 9/11/93	DATE 2/21/94	DATE 3/31/94	SHEET 86/270

\11646\REPP10

FHWA REGION	STATE	PROJECT	
5	OHIO		

219 / 412

CUYAHOGA COUNTY
CUY – 6 – 14.99

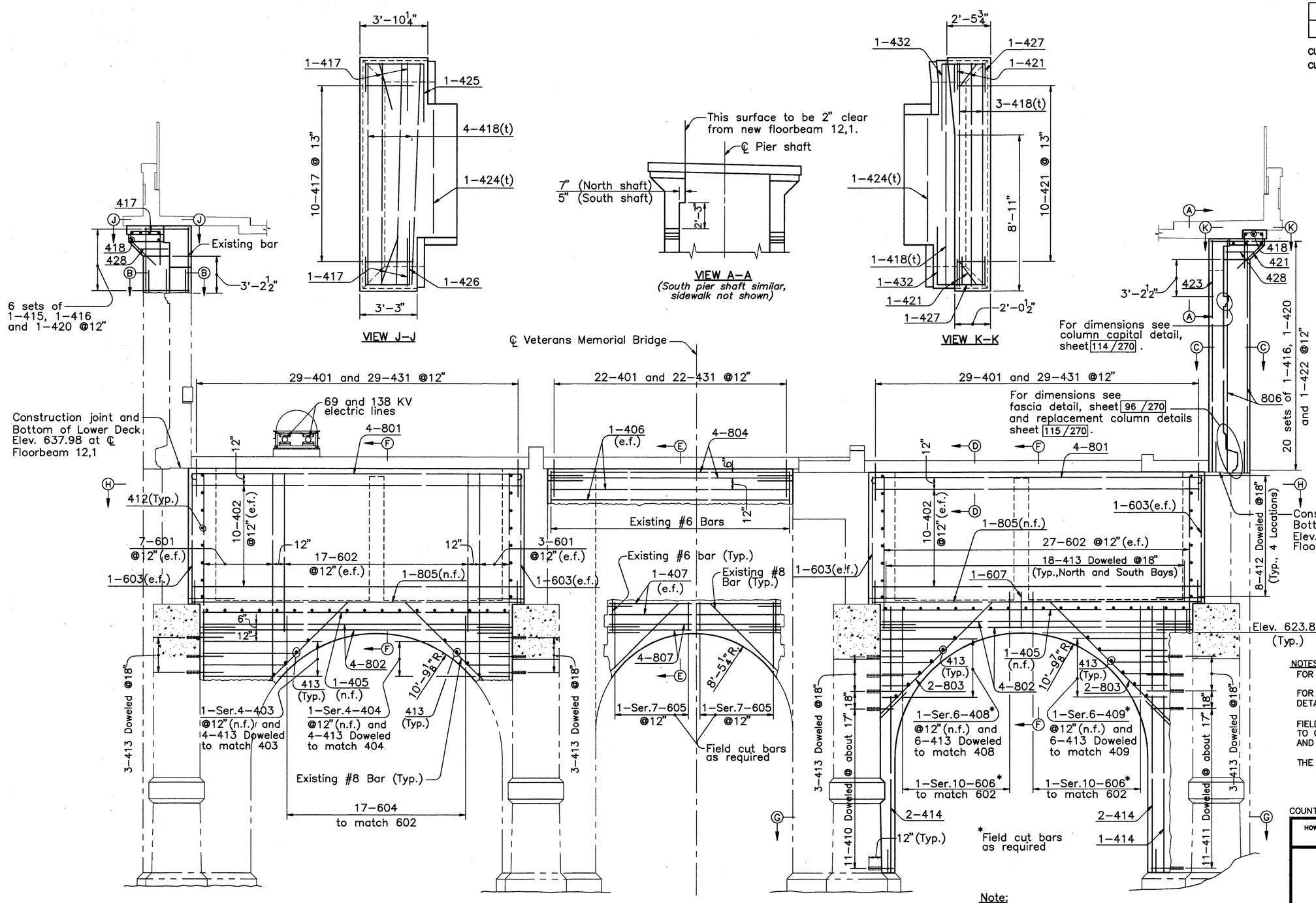

REQUIRED BAR LAP LENGTH	
NO. 4 BAR	1'–6"
NO. 6 BAR	2'–0"
NO. 8 BAR	4'–0"

ALL REINFORCING BAR MARKS SHALL BE PREFIXED 11EP.

NOTES:
FOR REMOVAL DETAILS SEE SHEET 59/270.

FOR SECTIONS B–B THRU H–H AND ADDITIONAL DETAILS SEE SHEET 88/270.

FIELD CUT REINFORCEMENT AS REQUIRED TO CLEAR COPINGS FOR LOWER DECK AND COLUMN CAPS.

THE FOLLOWING ABBREVIATIONS ARE USED:
(e.f.) – each face
(n.f.) – near face
(t) – top

Note:
BAR 413 SHALL BE DOWELED 12" INTO EXISTING CONCRETE.

ELEVATION – PIER 11
(Looking West)
(Floorbeams 12,1 and 12,2 not shown)

COUNTY BRIDGE NO. 84

HOWARD NEEDLES TAMMEN & BERGENDOFF
ARCHITECTS ENGINEERS PLANNERS
HNTB

REPLACEMENT DETAILS
PIER 11
BR. NO. CUY – 6 – 1499
REHABILITATION OF
VETERANS MEMORIAL BRIDGE
(U.S. 6, 20, 42 & S.R. 3 OVER CUYAHOGA RIVER)

CLEVELAND CUYAHOGA COUNTY OHIO

DRAWN B.E.B.	TRACED B.E.B.	CHECKED W.D.D.	REVIEWED C.A.B.	REVISED
DATE 9/13/93	DATE 9/13/93	DATE 2/23/94	DATE 3/31/94	SHEET 87/270

\11646\eepp11

FHWA REGION	STATE	PROJECT	
5	OHIO		

220/412

CUYAHOGA COUNTY
CUY – 6 – 14.99

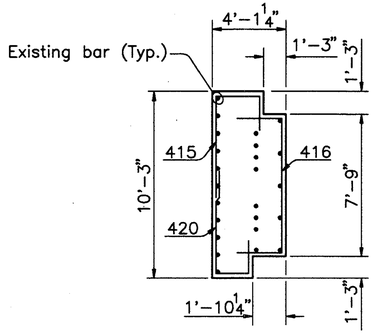

SECTION B–B

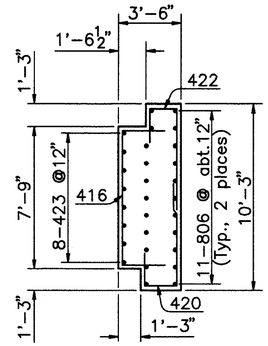

SECTION C–C

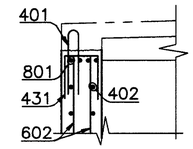

SECTION D–D

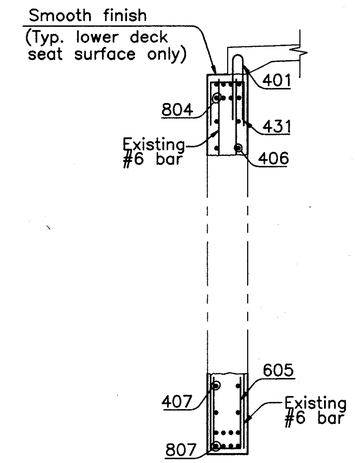

SECTION E–E

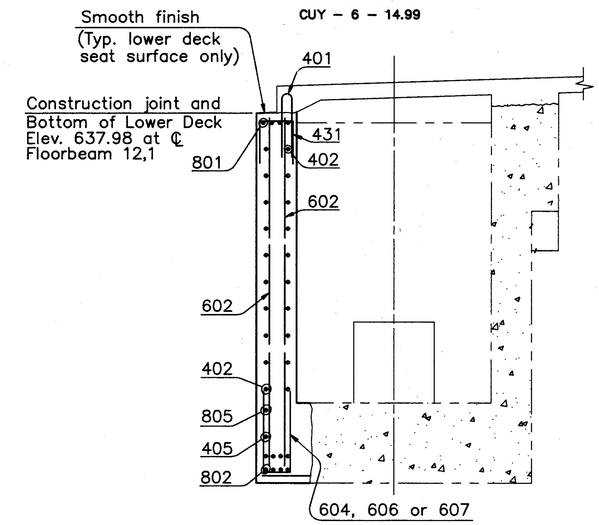

SECTION F–F

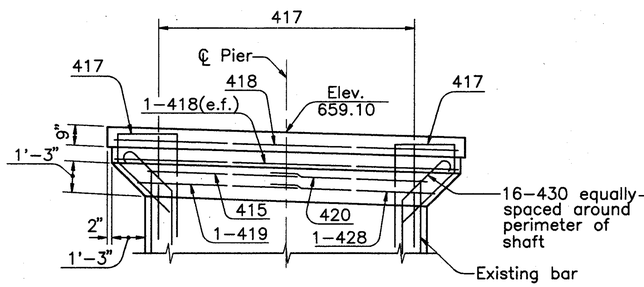

DETAIL AT TOP OF SOUTH PIER SHAFT
(Looking north)

Note:
Dimensions are typical on three faces of shaft.

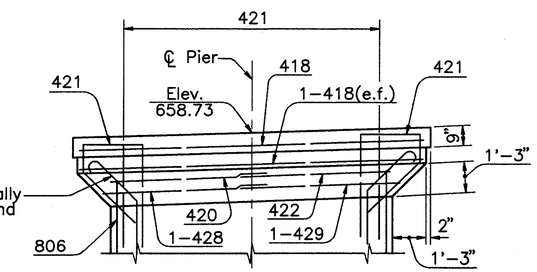

DETAIL AT TOP OF NORTH PIER SHAFT
(Looking south)

Note:
Dimensions are typical on three faces of shaft.

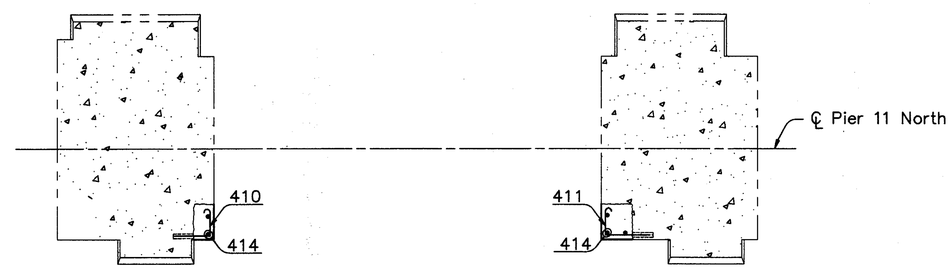

SECTION G–G

ALL REINFORCING BAR MARKS SHALL BE PREFIXED 11EP.

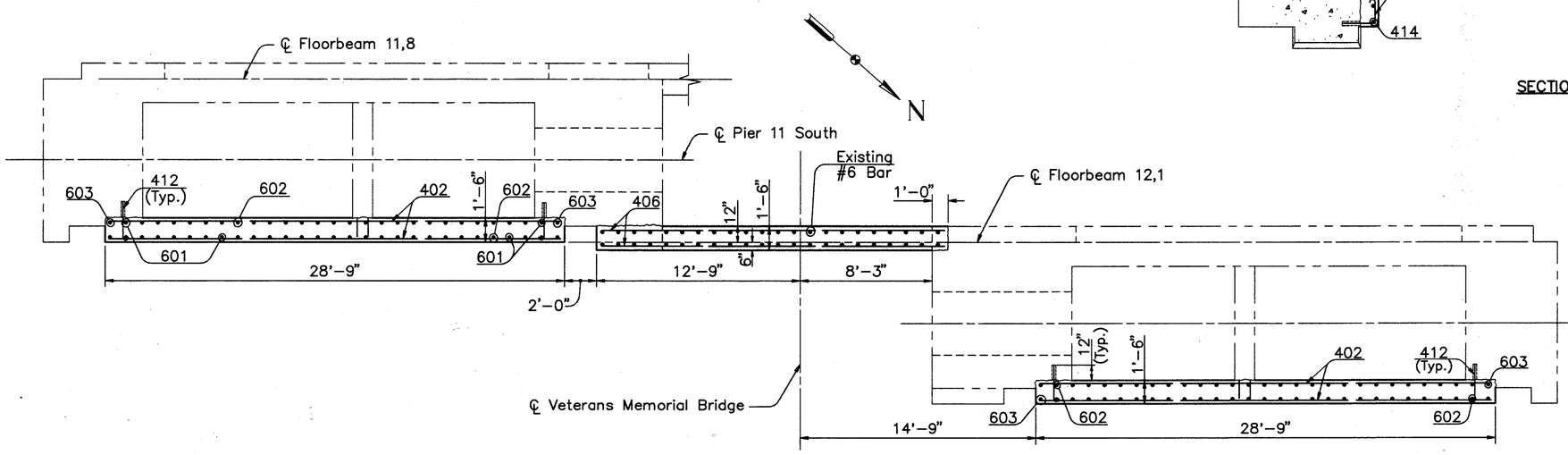

SECTION H–H

NOTES:
FOR LOCATIONS OF SECTIONS B–B THRU H–H AND ADDITIONAL NOTES SEE SHEET 87/270.

COUNTY BRIDGE NO. 84

HOWARD NEEDLES TAMMEN & BERGENDOFF
ARCHITECTS ENGINEERS PLANNERS
HNTB

REPLACEMENT DETAILS
PIER 11
BR. NO. CUY – 6 – 1499
REHABILITATION OF
VETERANS MEMORIAL BRIDGE
(U.S. 6, 20, 42 & S.R. 3 OVER CUYAHOGA RIVER)

CLEVELAND CUYAHOGA COUNTY OHIO

DRAWN B.E.B.	TRACED B.E.B.	CHECKED W.D.D.	REVIEWED C.A.B.	REVISED
DATE 9/11/93	DATE 9/11/93	DATE 2/23/94	DATE 3/31/94	SHEET 88/270

\11646\REPP11

FHWA REGION	STATE	PROJECT	
5	OHIO		

221
412

CUYAHOGA COUNTY
CUY – 6 – 14.99

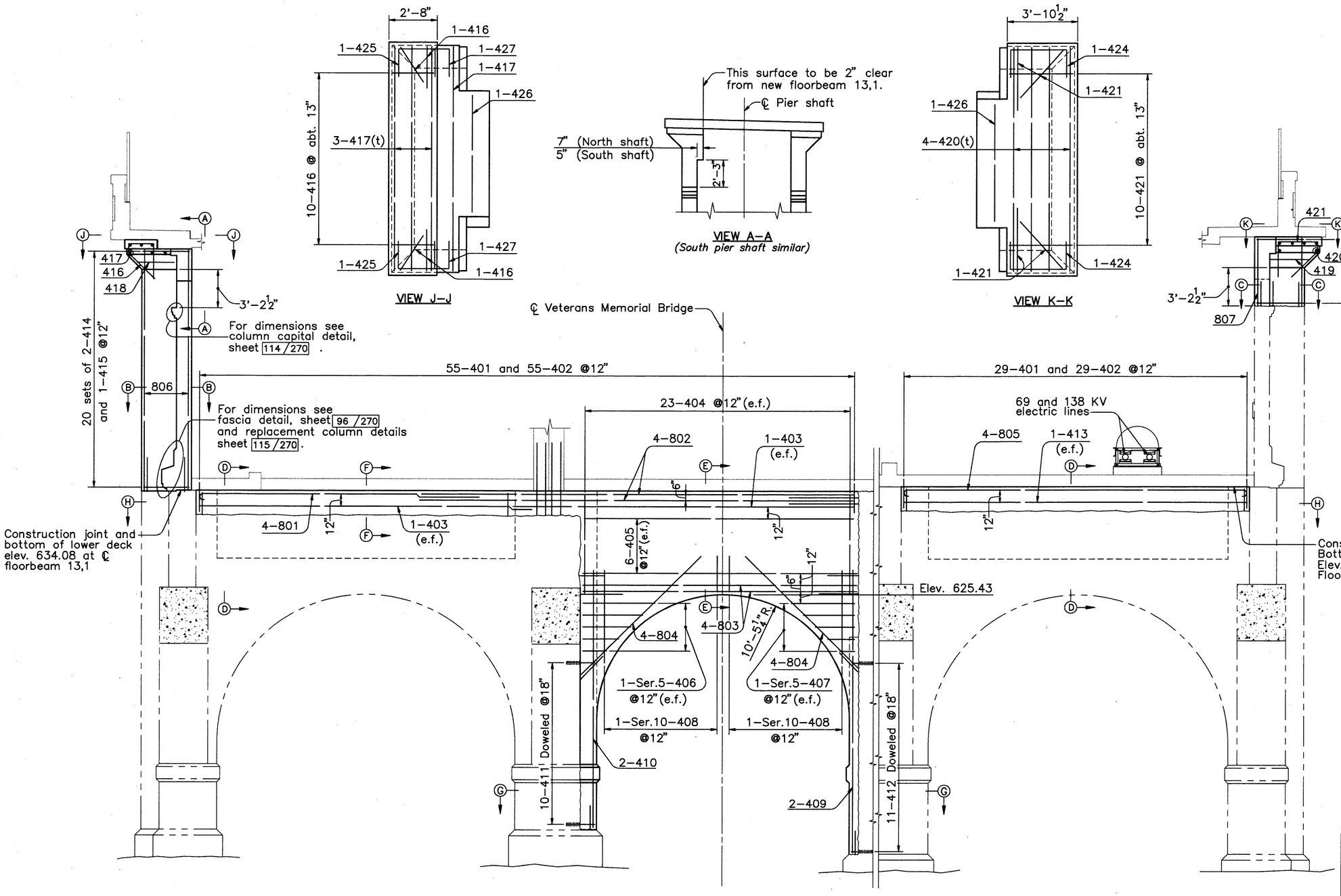

ELEVATION – PIER 12
(Looking East)
(Floorbeams 12,12 and 13,1 not shown)

REQUIRED BAR LAP LENGTH	
NO. 4 BAR	1'-6"
NO. 8 BAR	4'-0"

NOTES:

FOR REMOVAL DETAILS SEE SHEET 60/270.

FIELD CUT REINFORCEMENT AS REQUIRED TO CLEAR COPINGS FOR LOWER DECK AND COLUMN CAPS.

FOR SECTIONS B–B THRU H–H AND ADDITIONAL DETAILS SEE SHEET 90/270.

THE FOLLOWING ABBREVIATIONS ARE USED:
(e.f.) – each face
(t) – top

ALL REINFORCING BAR MARKS SHALL BE PREFIXED 12EP.

COUNTY BRIDGE NO. 84

HOWARD NEEDLES TAMMEN & BERGENDOFF
ARCHITECTS ENGINEERS PLANNERS
HNTB

REPLACEMENT DETAILS
PIER 12
BR. NO. CUY – 6 – 1499
REHABILITATION OF
VETERANS MEMORIAL BRIDGE
(U.S. 6, 20, 42 & S.R. 3 OVER CUYAHOGA RIVER)
CLEVELAND CUYAHOGA COUNTY OHIO

DRAWN B.E.B.	TRACED B.E.B.	CHECKED W.D.D.	REVIEWED C.A.B.	REVISED
DATE 9/18/93	DATE 9/18/93	DATE 3/1/94	DATE 3/31/94	SHEET 89/270

\11646\REPP12

FHWA REGION	STATE	PROJECT	
5	OHIO		

222/412

CUYAHOGA COUNTY
CUY – 6 – 14.99

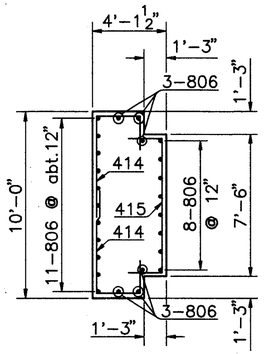

SECTION B–B

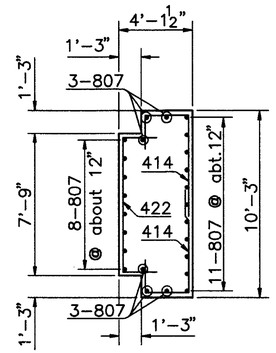

SECTION C–C

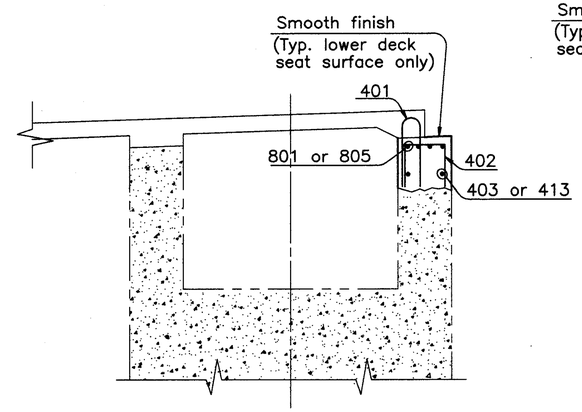

SECTION D–D

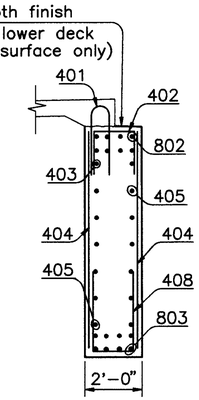

SECTION E–E

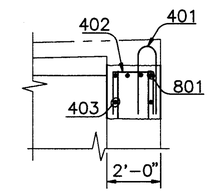

SECTION F–F

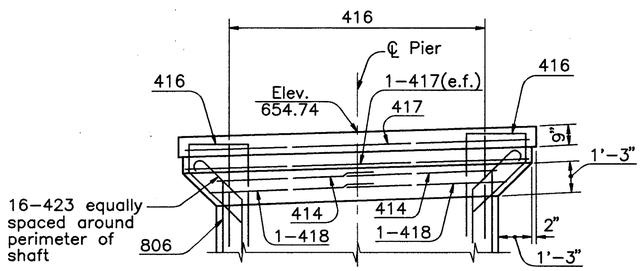

DETAIL AT TOP OF NORTH PIER SHAFT
(Looking south)

Note:
Dimensions are typical on three faces of shaft.

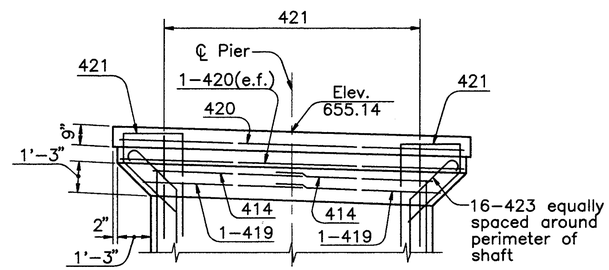

DETAIL AT TOP OF SOUTH PIER SHAFT
(Looking north)

Note:
Dimensions are typical on three faces of shaft.

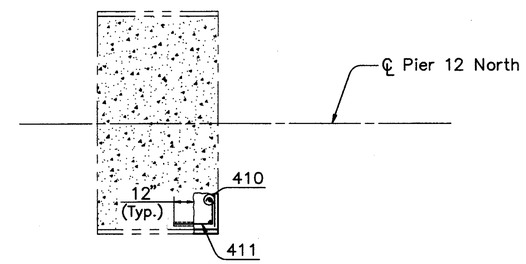

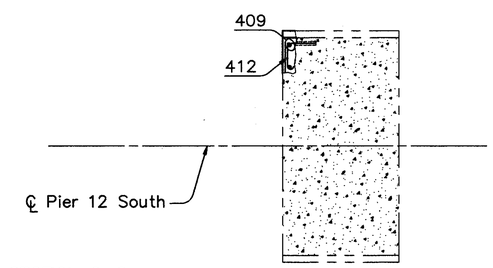

SECTION G–G

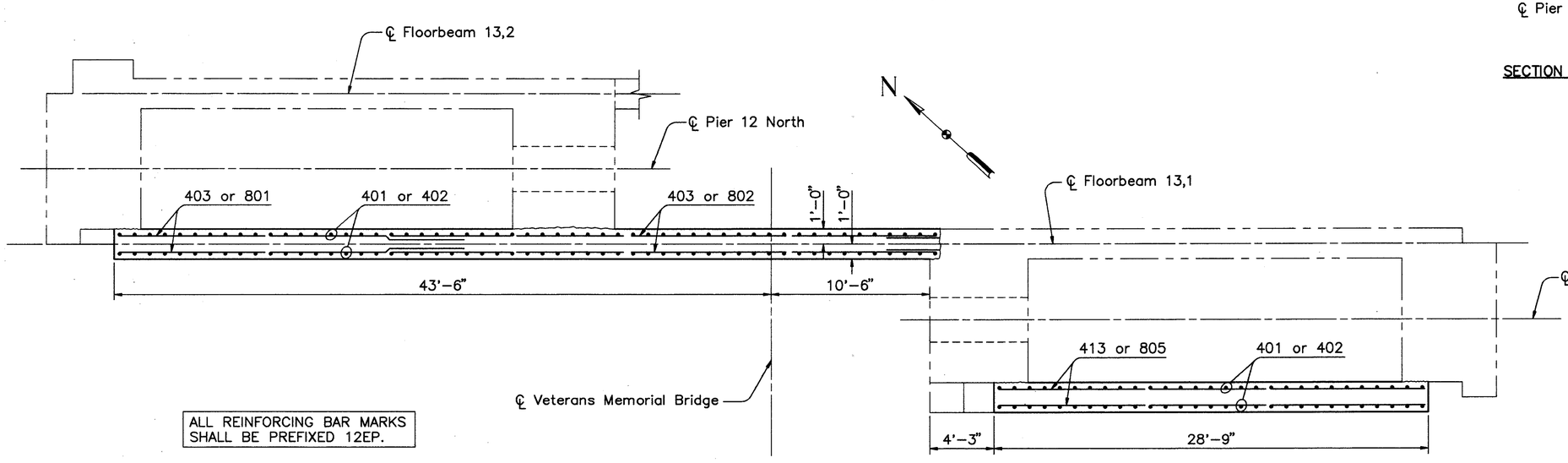

ALL REINFORCING BAR MARKS SHALL BE PREFIXED 12EP.

SECTION H–H

NOTES:
FOR LOCATIONS OF SECTIONS B–B THRU H–H AND ADDITIONAL NOTES SEE SHEET 89/270.

COUNTY BRIDGE NO. 84

HOWARD NEEDLES TAMMEN & BERGENDOFF
ARCHITECTS ENGINEERS PLANNERS
HNTB

REPLACEMENT DETAILS
PIER 12
BR. NO. CUY – 6 – 1499
REHABILITATION OF
VETERANS MEMORIAL BRIDGE
(U.S. 6, 20, 42 & S.R. 3 OVER CUYAHOGA RIVER)

CLEVELAND CUYAHOGA COUNTY OHIO

DRAWN B.E.B.	TRACED B.E.B.	CHECKED W.D.D.	REVIEWED C.A.B.	REVISED
DATE 9/11/93	DATE 9/11/93	DATE 3/1/94	DATE 3/31/94	SHEET 90/270

\11646\REPP12

FHWA REGION	STATE	PROJECT	
5	OHIO		

223
412

CUYAHOGA COUNTY
CUY – 6 – 14.99

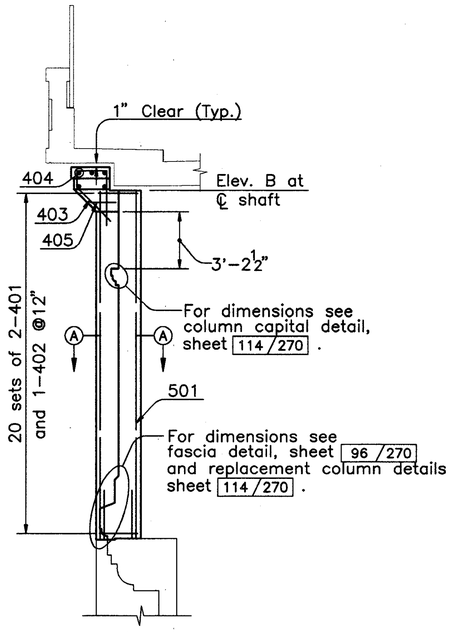

UPPER PIER OR ABUTMENT SHAFT ELEVATION
(Pier 1 shown, west abutment similar)

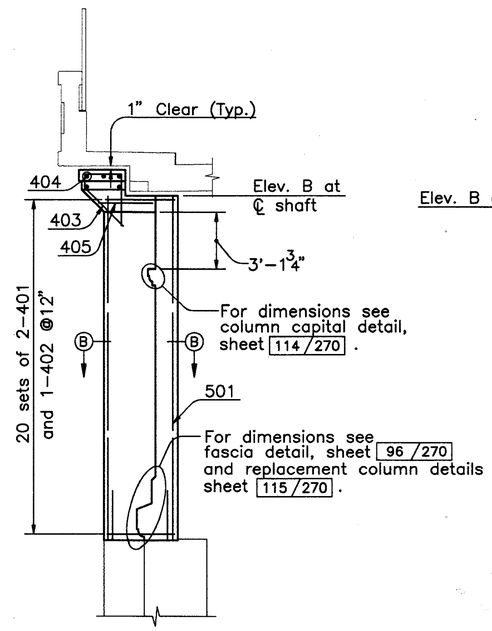

UPPER ABUTMENT SHAFT ELEVATION
(North shaft of east abutment)

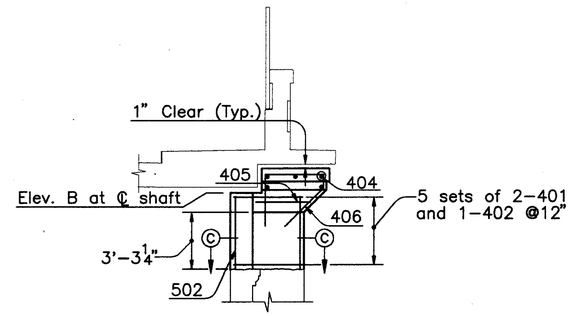

UPPER ABUTMENT SHAFT ELEVATION
(South shaft of east abutment)

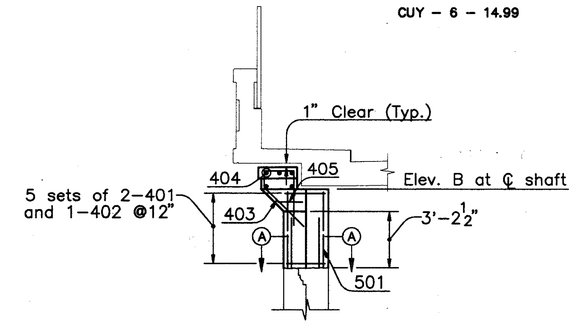

UPPER PIER SHAFT ELEVATION
(Typical, piers 6,7,8,9 and 10)

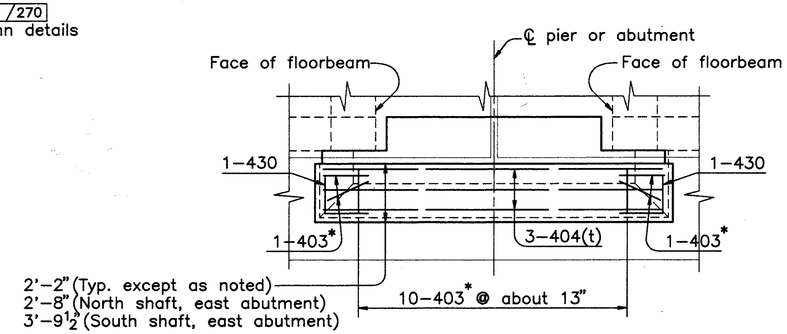

VIEW D–D

*406 at south shaft of east abutment

ALL REINFORCING BAR MARKS SHALL BE PREFIXED AS FOLLOWS:	
West Abutment	WEA
Pier 1	1EP
Pier 6	6EP
Pier 7	7EP
Pier 8	8EP
Pier 9	9EP
Pier 10	10EP
East Abutment	EEA

LOCATION	ELEV. A	ELEV. B
West Abutment	677.19	675.89
Pier 1	680.47	679.18
Pier 6	679.38	678.09
Pier 7	674.45	673.16
Pier 8	669.51	668.22
Pier 9	665.38	664.09
Pier 10	661.56	660.27
East Abut. North	652.52	651.23
East Abut. South	652.19	650.89

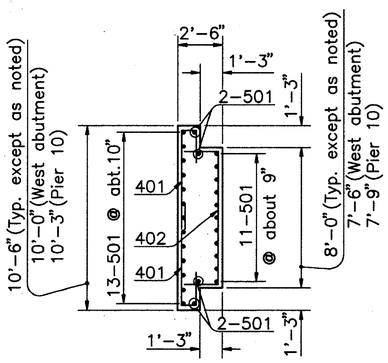

SECTION A–A

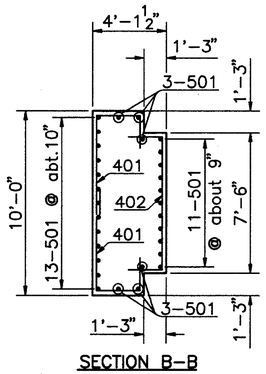

SECTION B–B

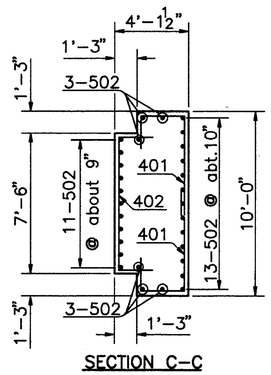

SECTION C–C

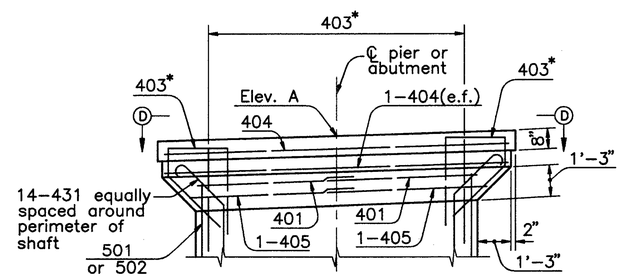

DETAIL AT TOP OF PIER OR ABUTMENT SHAFT

Note:
Dimensions are typical on three faces of shaft.

NOTES:

FOR REMOVAL DETAILS SEE SHEETS 53/270 THRU 60/270.

FOR REPLACEMENT DETAILS OF LOWER WALLS AND PIER SHAFTS SEE SHEETS 76/270 THRU 86/270.

FOR REPLACEMENT DETAILS OF UPPER PIER SHAFTS FOR PIERS 2,3,4 AND 5 SEE SHEET 92/270.

FOR REPLACEMENT DETAILS OF UPPER PIER SHAFTS FOR PIERS 11 AND 12 SEE SHEETS 87/270 THRU 90/270.

FIELD CUT REINFORCEMENT AS REQUIRED TO CLEAR COPINGS FOR LOWER DECK AND COLUMN CAPS.

BAR LAP LENGTH SHALL BE 1'–6" MINIMUM UNLESS OTHERWISE SPECIFIED.

THE FOLLOWING ABBREVIATION IS USED:
(e.f.) – each face
(t) – top

COUNTY BRIDGE NO. 84

HOWARD NEEDLES TAMMEN & BERGENDOFF
ARCHITECTS ENGINEERS PLANNERS
HNTB

REPLACEMENT DETAILS
UPPER PIER AND ABUTMENT SHAFTS
BR. NO. CUY – 6 – 1499
REHABILITATION OF
VETERANS MEMORIAL BRIDGE
(U.S. 6, 20, 42 & S.R. 3 OVER CUYAHOGA RIVER)

CLEVELAND CUYAHOGA COUNTY OHIO

DRAWN B.E.B.	TRACED B.E.B.	CHECKED W.D.D.	REVIEWED C.A.B.	REVISED
DATE 12/17/93	DATE 12/17/93	DATE 3/3/94	DATE 3/31/94	SHEET 91/270

\11646\UPIER.DWG

FHWA REGION	STATE	PROJECT	
5	OHIO		

224/412

CUYAHOGA COUNTY
CUY – 6 – 14.99

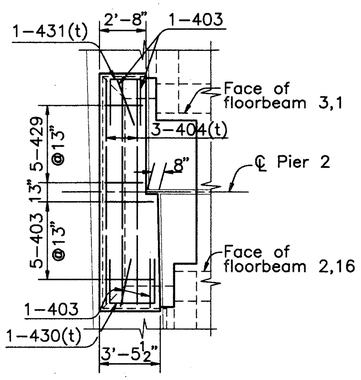

VIEW B–B

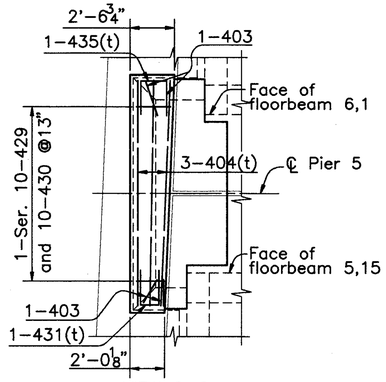

VIEW C–C

Column shall be cleaned, encased and paid for in accordance with Item Special, Repair Structural Steel Members Encased in Concrete. Payment shall be based on a 2'–0" wide strip, to the limits shown.

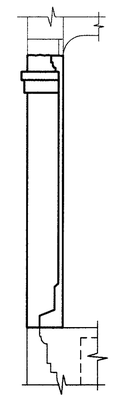

VIEW D–D

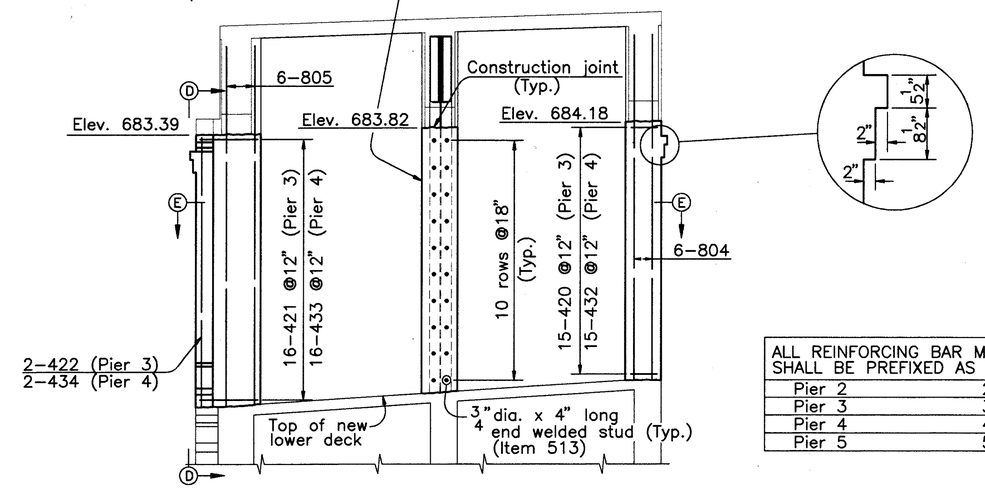

UPPER PIER SHAFT ELEVATION – PIERS 3 AND 4
(North shaft pier 3 looking north, others similar)

ALL REINFORCING BAR MARKS SHALL BE PREFIXED AS FOLLOWS:	
Pier 2	2EP
Pier 3	3EP
Pier 4	4EP
Pier 5	5EP

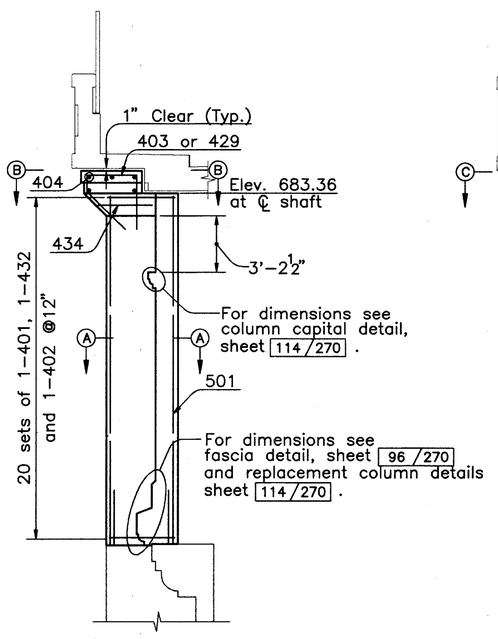

ELEVATION – PIER 2
(North shaft,looking east)
(South shaft opposite hand)

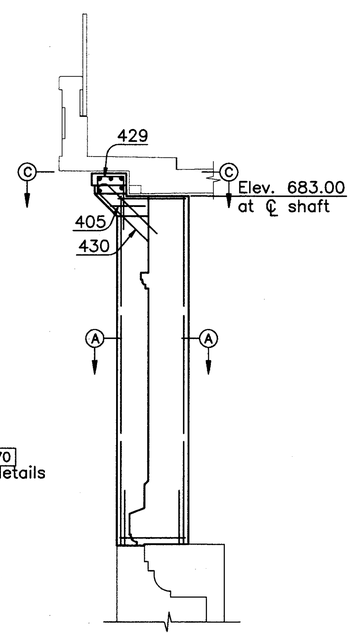

ELEVATION – PIER 5
(North shaft,looking east)
(South shaft opposite hand)

Note:
Dimensions and reinforcement similar to pier 2, except as noted.

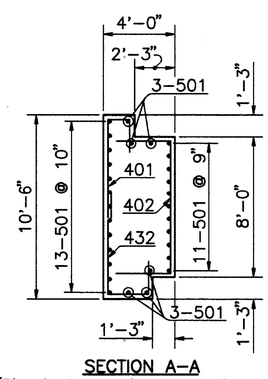

SECTION A–A
(Pier 2 shown, pier 5 opposite hand)

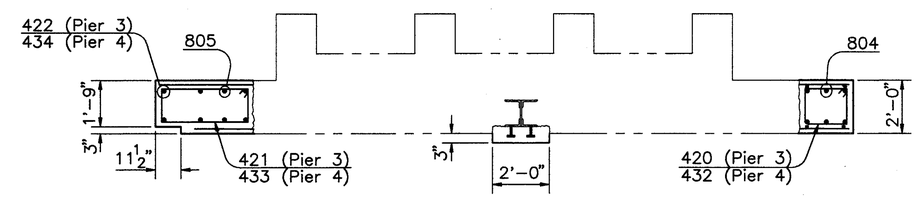

SECTION E–E

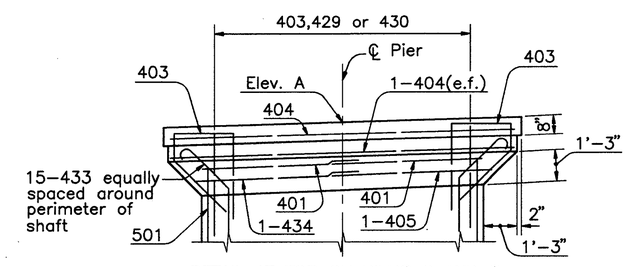

DETAIL AT TOP OF PIERS 2 AND 5

Note:
Dimensions are typical on three faces of shaft.

LOCATION	ELEV. A
Pier 2	684.65
Pier 5	684.29

NOTES:
FOR REMOVAL DETAILS SEE SHEETS 54/270, 55/270 AND 56/270.

FOR REPLACEMENT DETAILS OF LOWER WALL AND PIER SHAFT OF PIER 2 SEE SHEET 78/270.

FOR REPLACEMENT DETAILS OF LOWER WALL AND PIER SHAFT OF PIER 3 SEE SHEET 79/270.

FOR REPLACEMENT DETAILS OF LOWER WALL AND PIER SHAFT OF PIER 4 SEE SHEET 80/270.

FOR REPLACEMENT DETAILS OF LOWER WALL AND PIER SHAFT OF PIER 5 SEE SHEET 81/270.

FOR ADDITIONAL NOTES SEE SHEET 91/270.

COUNTY BRIDGE NO. 84

HOWARD NEEDLES TAMMEN & BERGENDOFF
ARCHITECTS ENGINEERS PLANNERS
HNTB

REPLACEMENT DETAILS
UPPER PIER SHAFTS
BR. NO. CUY – 6 – 1499
REHABILITATION OF
VETERANS MEMORIAL BRIDGE
(U.S. 6, 20, 42 & S.R. 3 OVER CUYAHOGA RIVER)

CLEVELAND CUYAHOGA COUNTY OHIO

DRAWN	TRACED	CHECKED	REVIEWED	REVISED
B.E.B.	B.E.B.	W.D.D.	C.A.B.	
DATE 12/17/93	DATE 12/17/93	DATE 3/3/94	DATE 3/31/94	SHEET 92/270

\11646\UPIER3.DWG

FHWA REGION	STATE	PROJECT	
5	OHIO		

225/412

CUYAHOGA COUNTY
CUY – 6 – 14.99

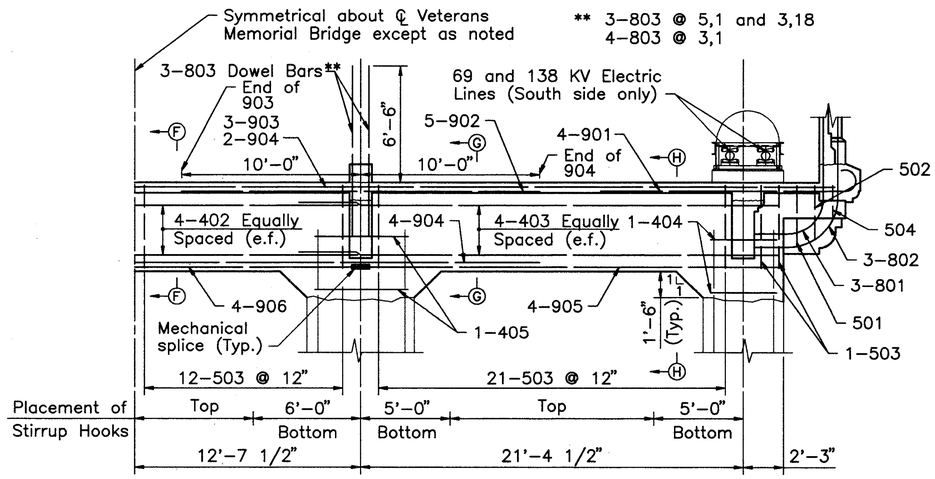

FLOORBEAMS 3.1, 3.18 AND 5.1
(Looking east)

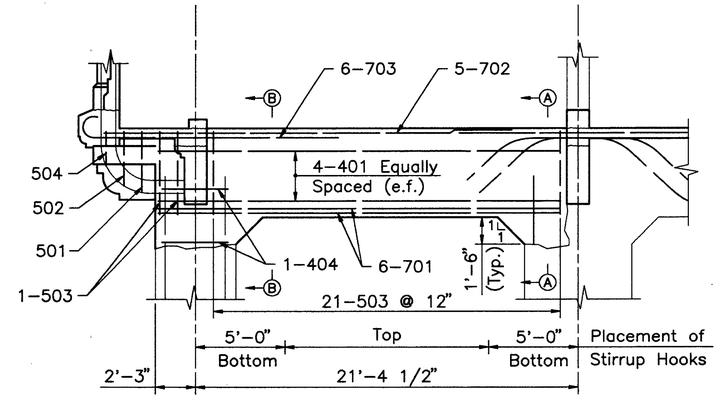

FLOORBEAMS 5.2 AND 3.17
(Looking east)

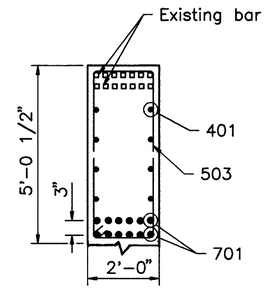

SECTION A–A

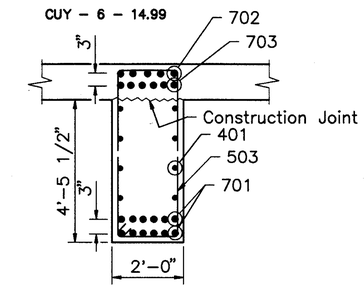

SECTION B–B

(NO SLAB AT SECTION B-B FOR FLOORBEAMS 5,2 & 3,17)

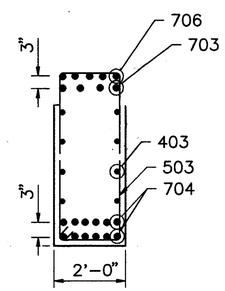

SECTION C–C

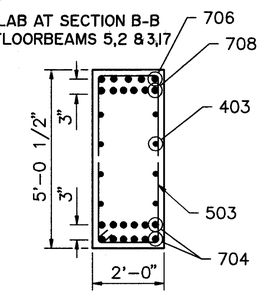

SECTION D–D

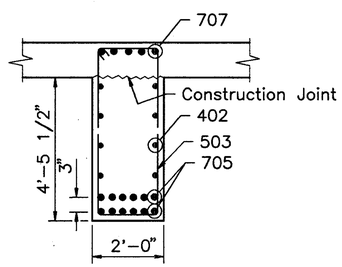

SECTION E–E

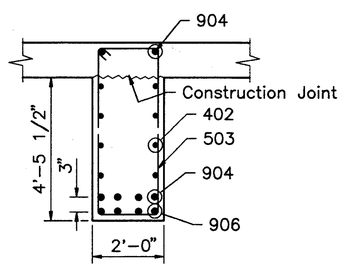

SECTION F–F

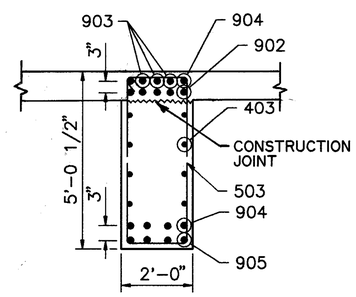

SECTION G–G

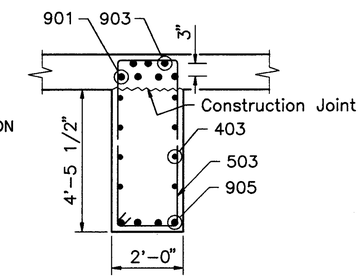

SECTION H–H

ALL REINFORCING BAR MARKS SHALL BE PREFIXED AS FOLLOWS:		
Span 1	–	1LEB
Span 2	–	2LEB
Span 3	–	3LEB
Span 5	–	5LEB
Span 6	–	6LEB
Span 7	–	7LEB
Span 8	–	8LEB
Span 9	–	9LEB
Span 10	–	10LEB
Span 11	–	11LEB
Span 13	–	13LEB

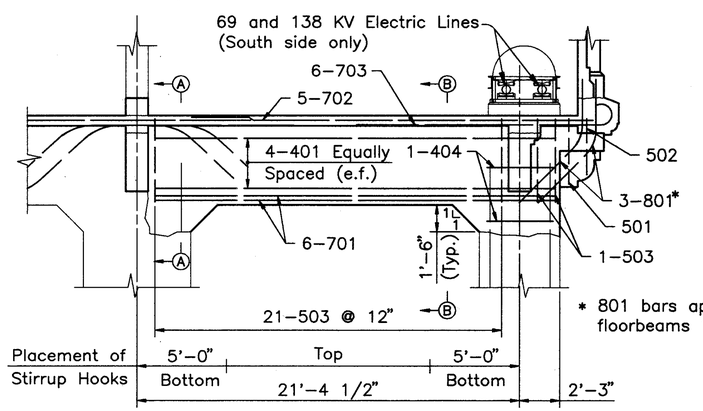

* 801 bars apply at floorbeams 1,1 and 2,1

FLOORBEAM ELEVATION
(Looking east)
(Floorbeam 1,1 shown, floorbeams 1,9 1,10 and 2,1 similar)

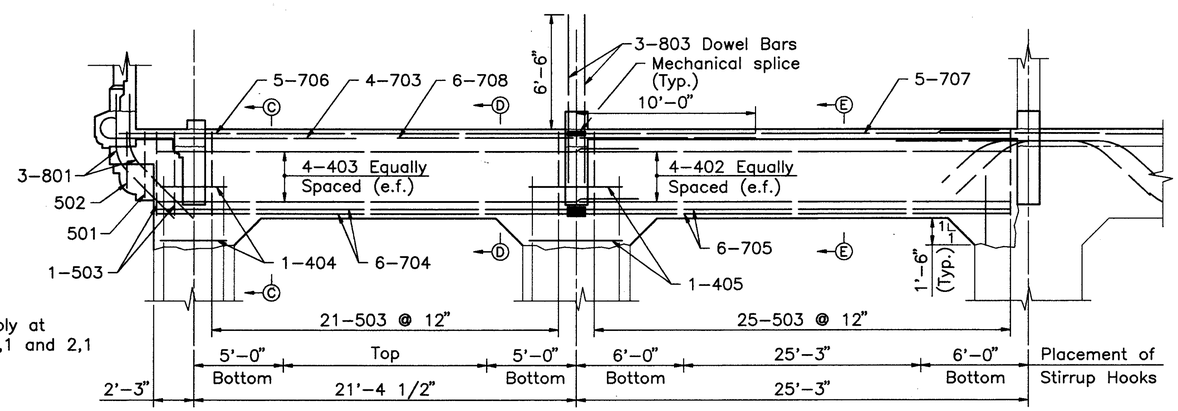

FLOORBEAM 1,13
(Looking east)

MINIMUM SPLICE LENGTH	
BAR	LENGTH
# 4	2'–3"

NOTE:

FOR CORBEL DETAILS, SEE SHEET 94/270.

FOR REMOVAL DETAILS, SEE SHEET 50/270.

COUNTY BRIDGE NO. 84

HOWARD NEEDLES TAMMEN & BERGENDOFF
ARCHITECTS ENGINEERS PLANNERS
HNTB

REPLACEMENT LOWER DECK FLOORBEAMS
BR. NO. CUY – 6 – 1499
REHABILITATION OF
VETERANS MEMORIAL BRIDGE
(U.S. 6, 20, 42 & S.R. 3 OVER CUYAHOGA RIVER)
CLEVELAND CUYAHOGA COUNTY OHIO

DRAWN	TRACED	CHECKED	REVIEWED	REVISED
R.S.Y.	R.S.Y.	B.E.B.	C.A.B.	
DATE 9/3/93	DATE 9/3/93	DATE 9/15/93	DATE 3/31/94	SHEET 93/270

\11646\CONCRETE\LDFB1

FHWA REGION	STATE	PROJECT	
5	OHIO		

226
412

CUYAHOGA COUNTY
CUY – 6 – 14.99

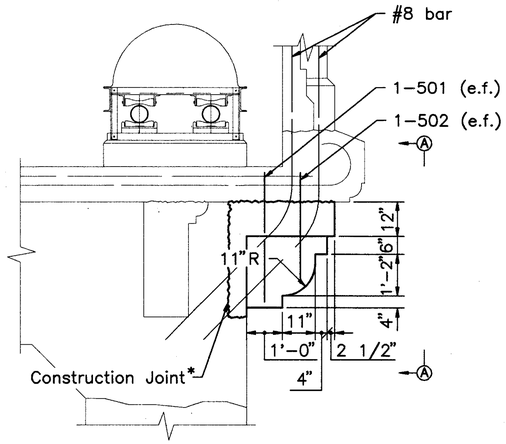

CORBEL ELEVATION
(Looking East)
(Spans 1–10, except 3, 4 and 5)

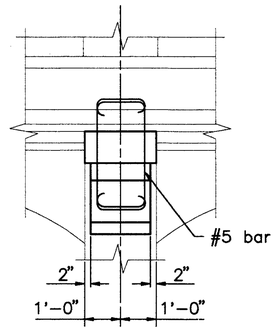

VIEW A–A
(Spans 3, 5 and 11 similar)

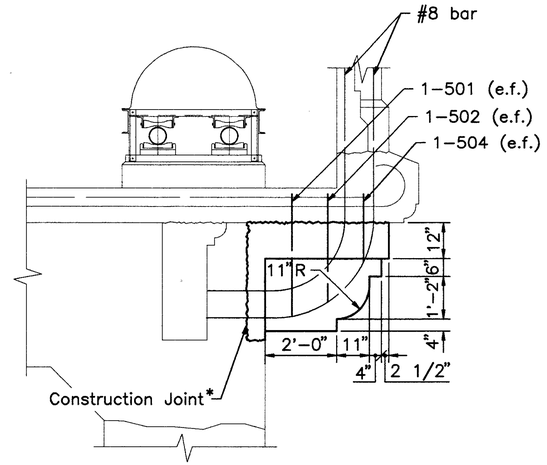

CORBEL ELEVATION
(Looking East)
(Spans 3 and 5)

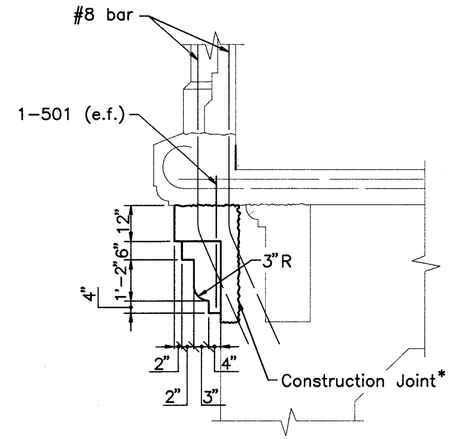

NORTH CORBEL ELEVATION
(Looking East)
(Span 11)

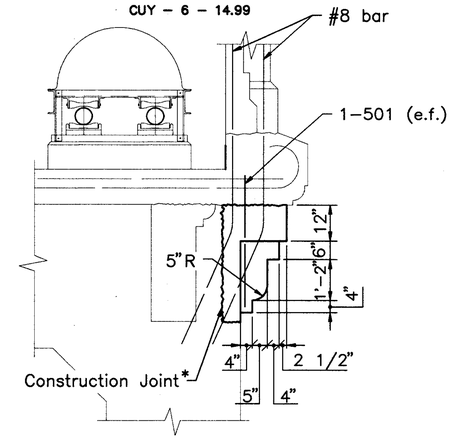

SOUTH CORBEL ELEVATION
(Looking East)
(Span 11)

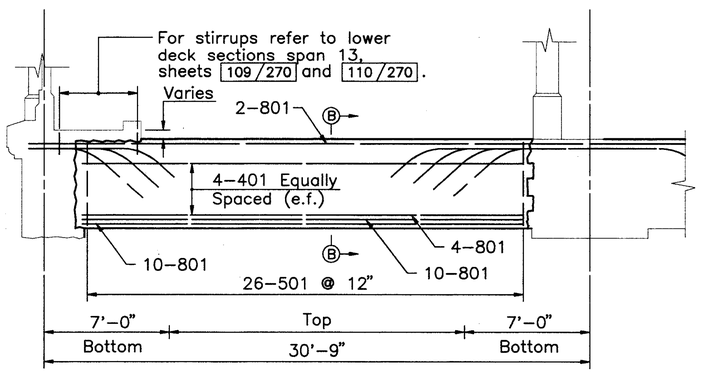

FLOORBEAM ELEVATION
(Looking East)
(Floorbeam 13,3 shown, floorbeam 13,7 similar)

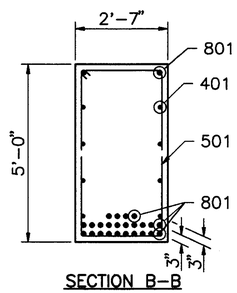

SECTION B–B

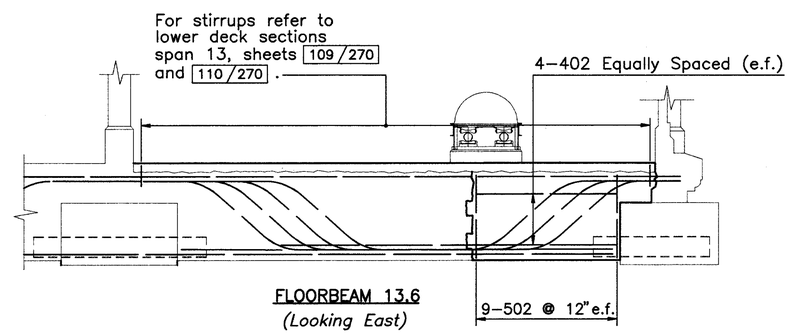

FLOORBEAM 13.6
(Looking East)

ALL REINFORCING BAR MARKS SHALL BE PREFIXED AS FOLLOWS:		
Span 1	–	1LEB
Span 2	–	2LEB
Span 3	–	3LEB
Span 5	–	5LEB
Span 6	–	6LEB
Span 7	–	7LEB
Span 8	–	8LEB
Span 9	–	9LEB
Span 10	–	10LEB
Span 11	–	11LEB
Span 13	–	13LEB

NOTES:

FOR REMOVAL DETAILS, SEE SHEET 50/270.

* AT LOCATIONS WHERE FLOORBEAM IS REPLACED CORBEL SHALL BE PLACED MONOLITHIC WITH THE FLOORBEAM.

FORMWORK FOR CORBELS SHALL NOT BE REMOVED UNTIL LOWER DECK HAS BEEN PLACED AND CURED.

e.f. DENOTES EACH FACE

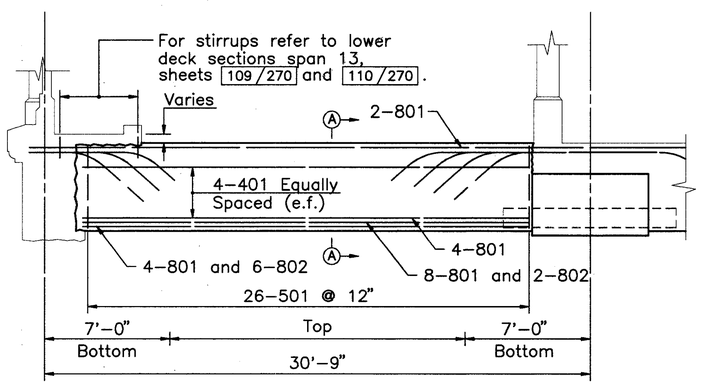

FLOORBEAM ELEVATION
(Looking East)
(Floorbeam 13,4 shown, floorbeams 13,5 and 13,6 similar)

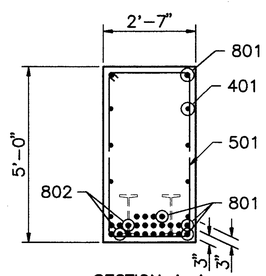

SECTION A–A

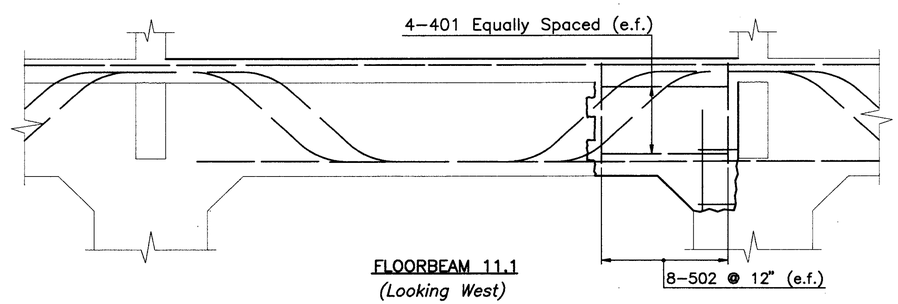

FLOORBEAM 11.1
(Looking West)

COUNTY BRIDGE NO. 84

HOWARD NEEDLES TAMMEN & BERGENDOFF
ARCHITECTS ENGINEERS PLANNERS
HNTB

REPLACEMENT LOWER DECK
FLOORBEAMS AND CORBELS
BR. NO. CUY – 6 – 1499
REHABILITATION OF
VETERANS MEMORIAL BRIDGE
(U.S. 6, 20, 42 & S.R. 3 OVER CUYAHOGA RIVER)
CLEVELAND CUYAHOGA COUNTY OHIO

DRAWN R.S.Y.	TRACED R.S.Y.	CHECKED B.E.B.	REVIEWED C.A.B.	REVISED
DATE 9/3/93	DATE 9/3/93	DATE 9/15/93	DATE 3/31/94	SHEET 94/270

\11646\LDFB2

FHWA REGION	STATE	PROJECT	
5	OHIO		

227/412

CUYAHOGA COUNTY
CUY – 6 – 14.99

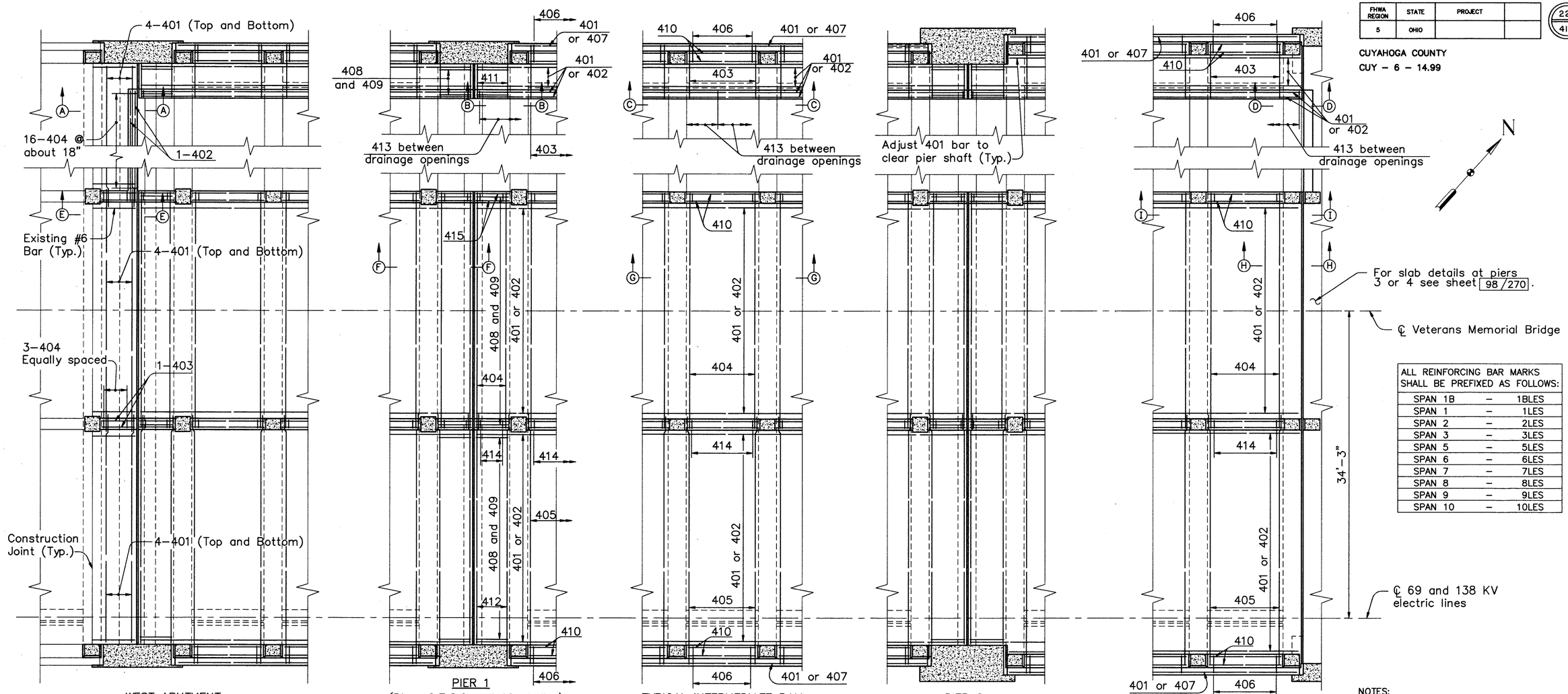

WEST ABUTMENT
(Reinforcement similar to Pier 1, except as noted)

PIER 1
(Piers 6,7,8,9 and 10 similar)
(Reinforcement symmetrical about ℄ Joint)

TYPICAL INTERMEDIATE BAY

PARTIAL LOWER DECK PLAN

PIER 2
(Pier 5 opposite hand)
(Reinforcement similar to Pier 1)

SPAN 3 ADJACENT TO PIER 3
(Pier 4 opposite hand)

ALL REINFORCING BAR MARKS SHALL BE PREFIXED AS FOLLOWS:		
SPAN 1B	–	1BLES
SPAN 1	–	1LES
SPAN 2	–	2LES
SPAN 3	–	3LES
SPAN 5	–	5LES
SPAN 6	–	6LES
SPAN 7	–	7LES
SPAN 8	–	8LES
SPAN 9	–	9LES
SPAN 10	–	10LES

NOTES:
FOR TYPICAL SECTIONS SEE SHEET 96/270.
FOR SECTIONS A–A THRU I–I SEE SHEET 97/270.
THE REQUIRED REINFORCEMENT BAR LAP LENGTH SHALL BE 2'–2" MINIMUM.

SLAB REINFORCEMENT

BAR MARK	SPAN 1			SPAN 2			SPAN 3			SPAN 5			SPAN 6			SPAN 7			SPAN 8			SPAN 9			SPAN 10		
	NORTH BAY	CENTER BAY	SOUTH BAY	NORTH BAY	CENTER BAY	SOUTH BAY	NORTH BAY	CENTER BAY	SOUTH BAY	NORTH BAY	CENTER BAY	SOUTH BAY	NORTH BAY	CENTER BAY	SOUTH BAY	NORTH BAY	CENTER BAY	SOUTH BAY	NORTH BAY	CENTER BAY	SOUTH BAY	NORTH BAY	CENTER BAY	SOUTH BAY	NORTH BAY	CENTER BAY	SOUTH BAY
401	20 LINES OF 4=80	96 LINES OF 4=384	98 LINES OF 4=392	20 LINES OF 5=100	96 LINES OF 5=480	98 LINES OF 5=490	24 LINES OF 6=144	96 LINES OF 6=576	102 LINES OF 6=612	24 LINES OF 5=120	96 LINES OF 5=480	102 LINES OF 5=510	20 LINES OF 5=100	96 LINES OF 5=480	98 LINES OF 5=490	20 LINES OF 5=100	96 LINES OF 5=480	98 LINES OF 5=490	20 LINES OF 5=100	96 LINES OF 5=480	98 LINES OF 5=490	20 LINES OF 4=80	96 LINES OF 4=384	98 LINES OF 4=392	20 LINES OF 4=80	96 LINES OF 4=384	98 LINES OF 4=392
402	18	96	96	18	96	96	22	96	100	22	96	100	18	96	96	18	96	96	18	96	96	18	96	96	18	96	96
403	132	—	—	165	—	—	187	—	—	154	—	—	154	—	—	154	—	—	154	—	—	132	—	—	121	—	—
404	—	152	—	—	185	—	—	197	—	—	164	—	—	174	—	—	174	—	—	174	—	—	152	—	—	141	—
405	—	—	132	—	—	165	—	—	187	—	—	154	—	—	154	—	—	154	—	—	154	—	—	132	—	—	121
406	72	—	72	90	—	90	102	—	102	84	—	84	84	—	84	84	—	84	84	—	84	72	—	72	66	—	66
407	2	—	2	2	—	2	2	—	2	2	—	2	2	—	2	2	—	2	2	—	2	2	—	2	—	—	—
408	8	58	50	8	58	50	4	29	25	4	29	25	8	58	50	8	58	50	8	58	50	8	58	50	8	58	50
409	8	58	50	8	58	50	4	29	25	4	29	25	8	58	50	8	58	50	8	58	50	8	58	50	8	58	50
410	48	96	48	60	120	60	68	136	68	56	112	56	56	112	56	56	112	56	56	112	56	48	96	48	44	88	44
411	20	—	—	20	—	—	10	—	—	10	—	—	20	—	—	20	—	—	20	—	—	20	—	—	20	—	—
412	—	—	20	—	—	20	—	—	10	—	—	10	—	—	20	—	—	20	—	—	20	—	—	20	—	—	20
413	130	—	—	170	—	—	176	—	—	146	—	—	150	—	—	150	—	—	150	—	—	130	—	—	120	—	—
414	—	164	—	—	200	—	—	214	—	—	178	—	—	188	—	—	188	—	—	188	—	—	164	—	—	152	—
415	—	16	—	—	16	—	—	8	—	—	8	—	—	16	—	—	16	—	—	16	—	—	16	—	—	16	—

COUNTY BRIDGE NO. 84

HOWARD NEEDLES TAMMEN & BERGENDOFF
ARCHITECTS ENGINEERS PLANNERS
HNTB

LOWER DECK DETAILS
SPANS 1 THRU 3 AND 5 THRU 10
BR. NO. CUY – 6 – 1499
REHABILITATION OF
VETERANS MEMORIAL BRIDGE
(U.S. 6, 20, 42 & S.R. 3 OVER CUYAHOGA RIVER)
CLEVELAND CUYAHOGA COUNTY OHIO

DRAWN C.K.B.	TRACED G.C.A.	CHECKED C.E.P.	REVIEWED C.A.B.	REVISED
DATE 5/28/90	DATE 6/6/90	DATE 6/13/90	DATE 4/5/94	SHEET 95/270

\11646\LDECK.DWG

FHWA REGION	STATE	PROJECT	
5	OHIO		

228
412

CUYAHOGA COUNTY
CUY – 6 – 14.99

** Note: Transition cross slope over 30 foot length of Span 1 adjacent to West Abutment to match existing deck at West Abutment.

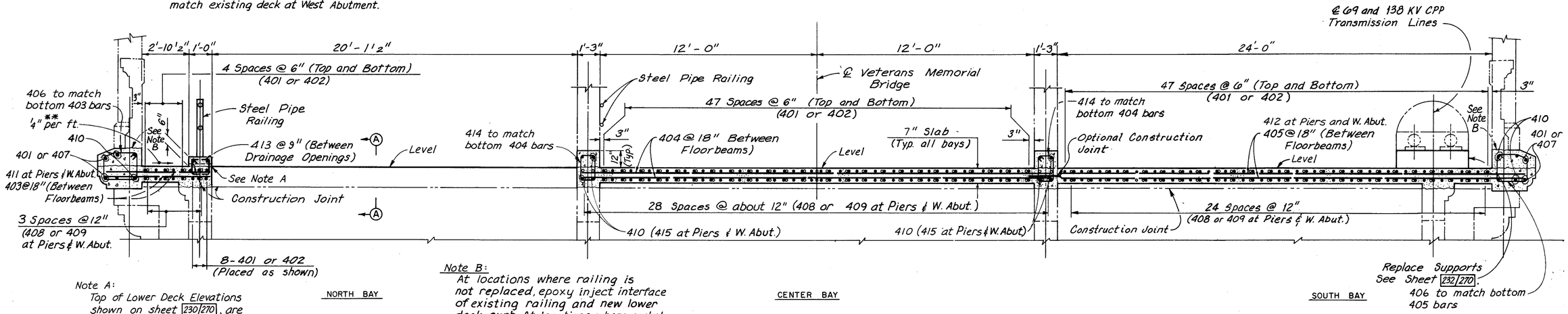

Note A:
Top of Lower Deck Elevations shown on sheet 230/270, are are given at this location.

Note B:
At locations where railing is not replaced, epoxy inject interface of existing railing and new lower deck curb. At locations where corbel and upper deck column are replaced, extend new lower deck curb beneath new column.

TYPICAL SECTION - SPANS 1, 2, 6 THRU 10

* Note: Transition cross slope over 30 foot length adjacent to Piers 3 and 4, to match level deck at Piers 3 and 4.

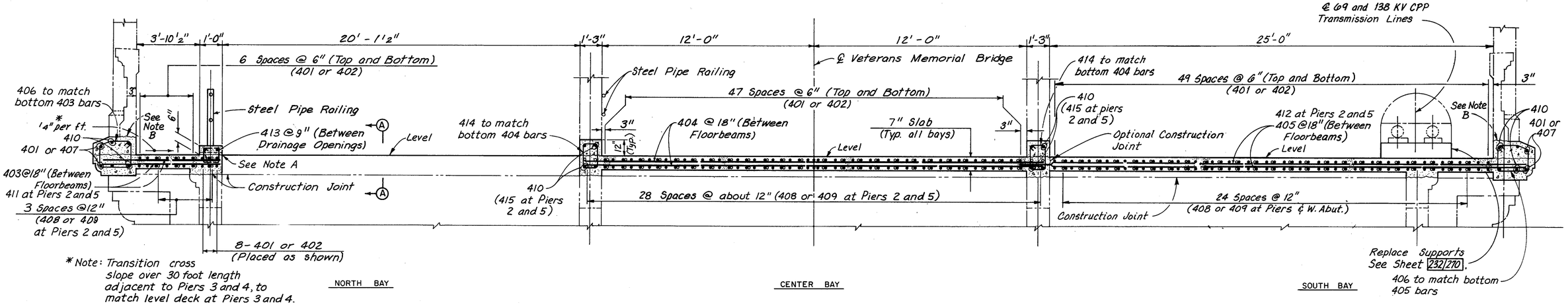

TYPICAL SECTION - SPANS 3 AND 5

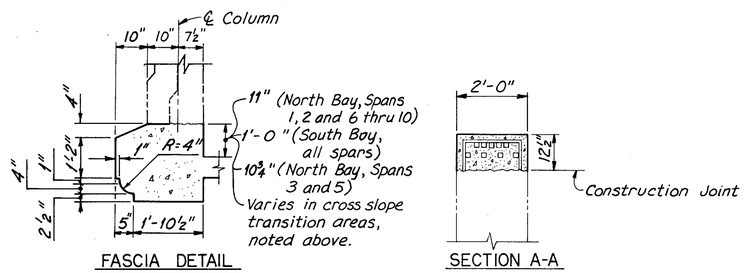

FASCIA DETAIL

SECTION A-A

NOTES:
THE REQUIRED REINFORCEMENT BAR LAP LENGTH SHALL BE 2'-2" MINIMUM.

FOR SECTIONS A-A AND B-B AND TYPICAL LONGITUDINAL DECK SECTIONS, SEE SHEET - 97/270

——·——·—— INDICATES EXISTING STRUCTURE

ALL REINFORCING BAR MARKS SHALL BE PREFIXED AS FOLLOWS:		
SPAN 1	-	1LES
SPAN 2	-	2LES
SPAN 3	-	3LES
SPAN 5	-	5LES
SPAN 6	-	6LES
SPAN 7	-	7LES
SPAN 8	-	8LES
SPAN 9	-	9LES
SPAN 10	-	10LES

COUNTY BRIDGE NO. 84

HOWARD NEEDLES TAMMEN & BERGENDOFF
ARCHITECTS ENGINEERS PLANNERS
HNTB

LOWER DECK SECTIONS
SPANS 1 THRU 3 AND 5 THRU 10
BR. NO. CUY – 6 – 1499
REHABILITATION OF
VETERANS MEMORIAL BRIDGE
(U.S. 6, 20, 42 & S.R. 3 OVER CUYAHOGA RIVER)

CLEVELAND CUYAHOGA COUNTY OHIO

DRAWN C.K.B.	TRACED G.C.A.	CHECKED C.E.P.	REVIEWED C.A.B.	REVISED
DATE 5/3/90	DATE 5/10/90	DATE 6/13/90	DATE 4/5/94	SHEET 96/270

FHWA REGION	STATE	PROJECT	
5	OHIO		

229/412

CUYAHOGA COUNTY
CUY – 6 – 14.99

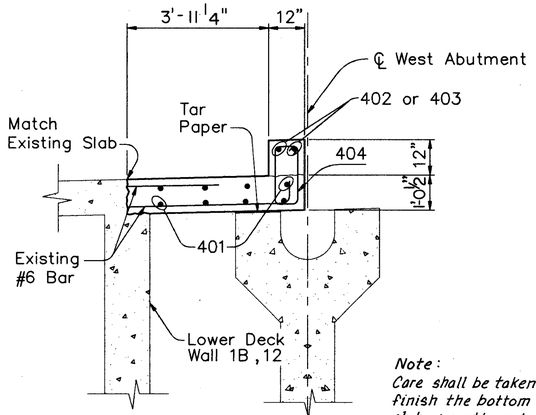

SECTION A–A
(Railing not shown)

Note:
Care shall be taken to finish the bottom of slab smooth and as high or slightly higher than the pier walls.

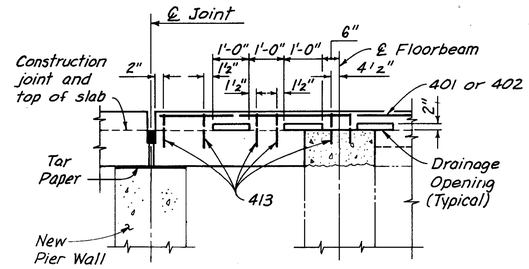

SECTION B–B
(New pier wall shown, existing pier wall similar)
(Railing not shown)

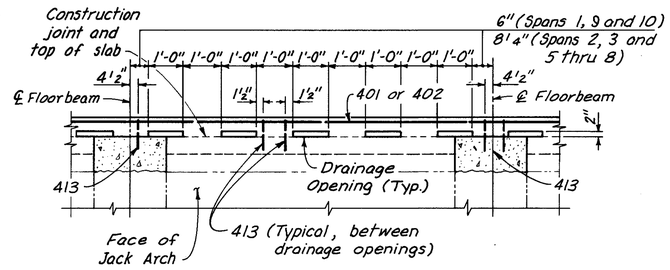

SECTION C–C
(Railing not shown)

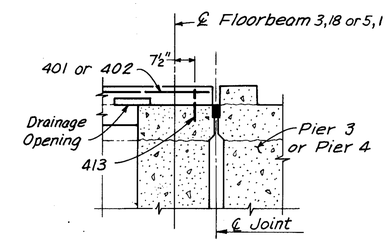

SECTION D–D
(Railing not shown)

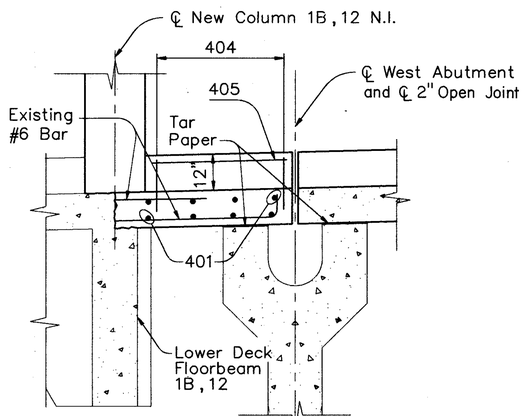

SECTION E–E
(Railing not shown)

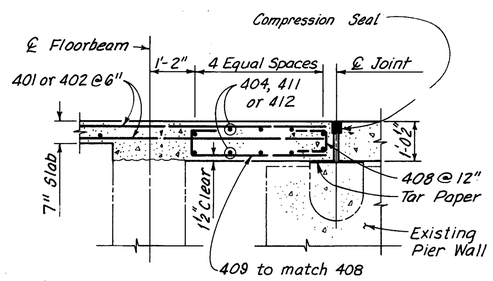

SECTION F–F
(Existing pier wall shown, new pier wall similar)

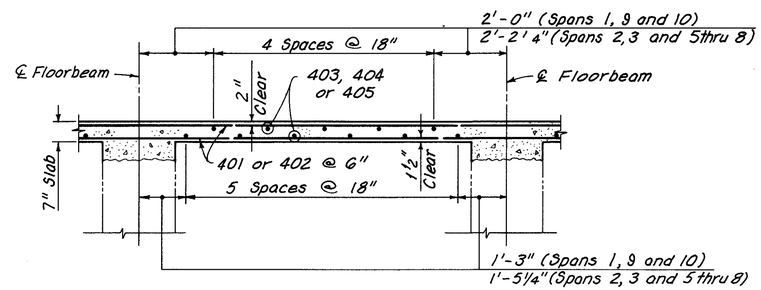

SECTION G–G

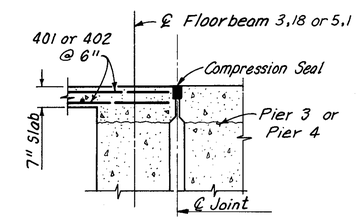

SECTION H–H

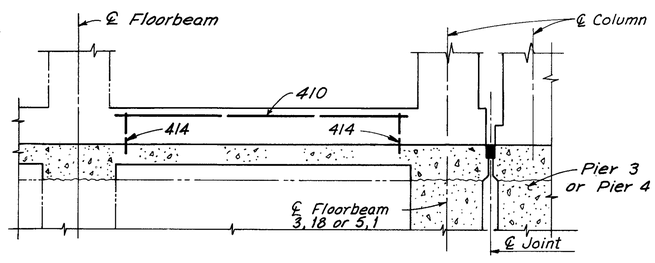

SECTION I–I
(Railing not shown)

NOTES:

FOR PARTIAL LOWER DECK PLAN AND LOCATIONS OF SECTIONS A–A THRU I–I SEE SHEET 95/270.

FOR TYPICAL SECTIONS SEE SHEET 96/270.

ALL REINFORCING BAR MARKS SHALL BE PREFIXED AS FOLLOWS:		
SPAN 1B	–	1BLES
SPAN 1	–	1LES
SPAN 2	–	2LES
SPAN 3	–	3LES
SPAN 5	–	5LES
SPAN 6	–	6LES
SPAN 7	–	7LES
SPAN 8	–	8LES
SPAN 9	–	9LES
SPAN 10	–	10LES

COUNTY BRIDGE NO. 84

HOWARD NEEDLES TAMMEN & BERGENDOFF
ARCHITECTS ENGINEERS PLANNERS
HNTB

LOWER DECK SECTIONS
SPANS 1 THRU 3 AND 5 THRU 10
BR. NO. CUY – 6 – 1499
REHABILITATION OF
VETERANS MEMORIAL BRIDGE
(U.S. 6, 20, 42 & S.R. 3 OVER CUYAHOGA RIVER)

CLEVELAND CUYAHOGA COUNTY OHIO

DRAWN C.K.B.	TRACED G.C.A.	CHECKED C.E.P.	REVIEWED C.A.B.	REVISED
DATE 5/28/90	DATE 6/6/90	DATE 6/13/90	DATE 4/5/94	SHEET 97/270

\11646\LDSECT.DWG

FHWA REGION	STATE	PROJECT	
5	OHIO		

230/412

CUYAHOGA COUNTY
CUY – 6 – 14.99

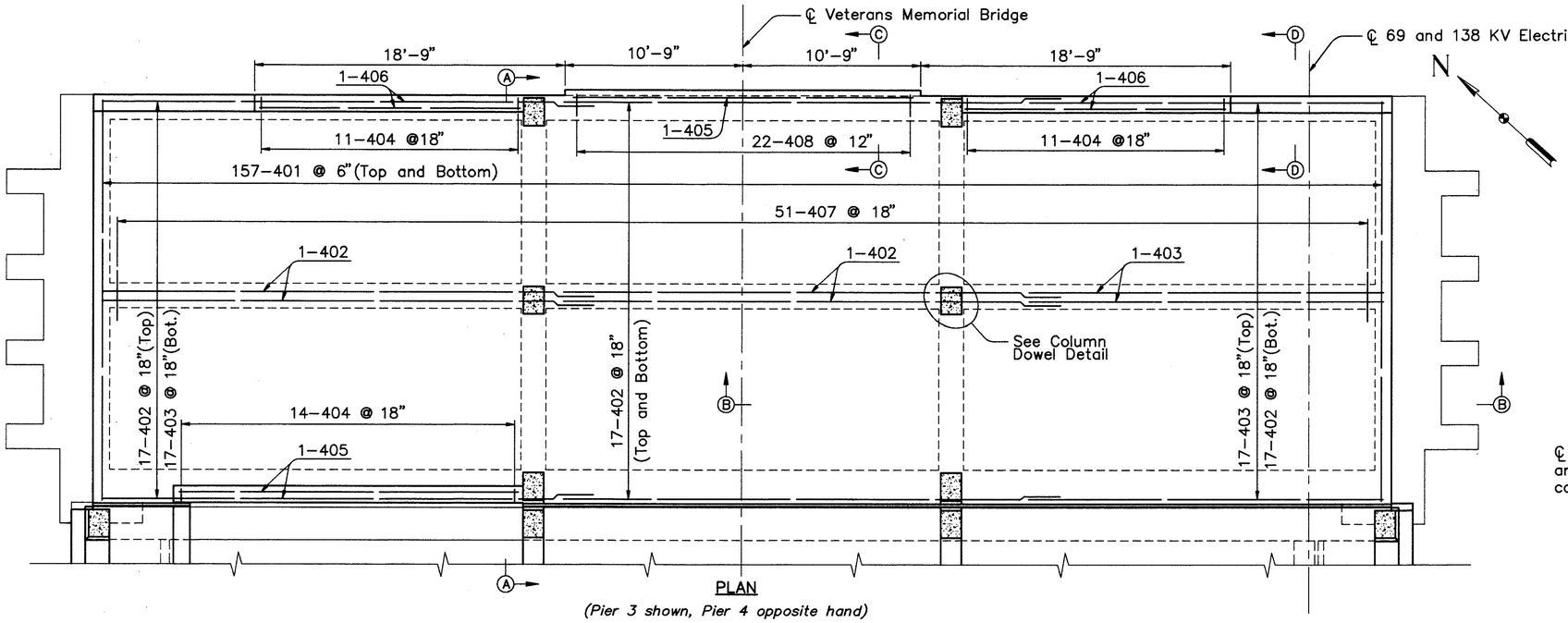

PLAN

(Pier 3 shown, Pier 4 opposite hand)

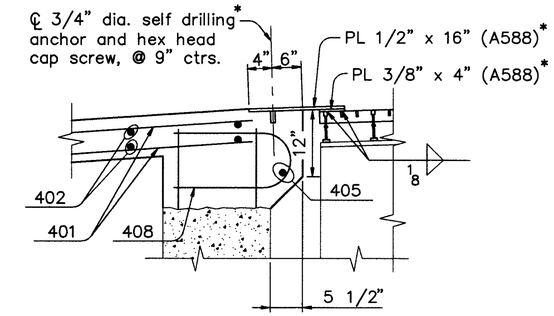

SECTION C–C

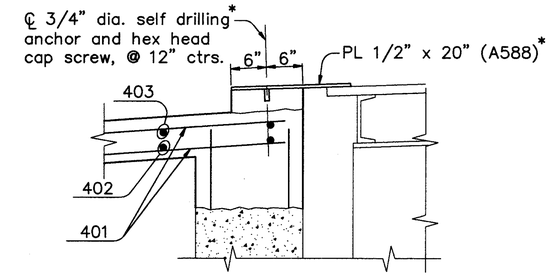

SECTION D–D

* Steel plates, bolts, and anchors shall be included with the open grid decking or fiberglass grating for payment. All bolts shall be galvanized.

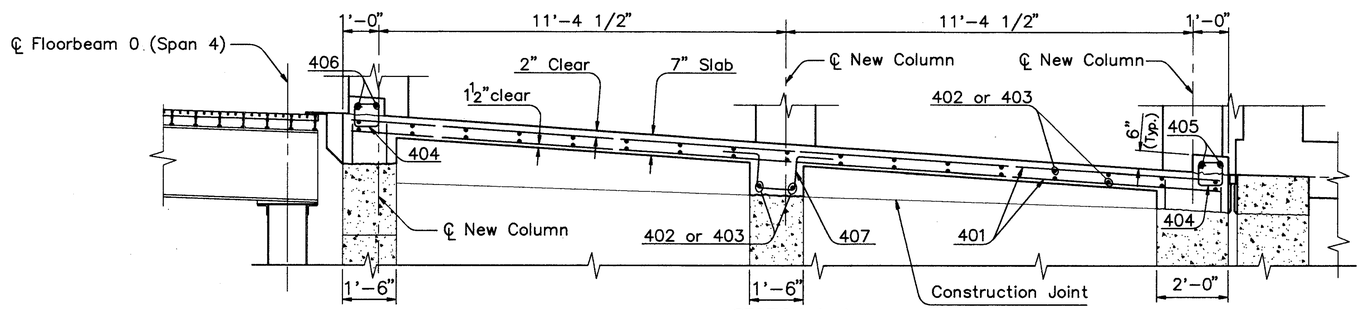

SECTION A–A

(Railings not shown)

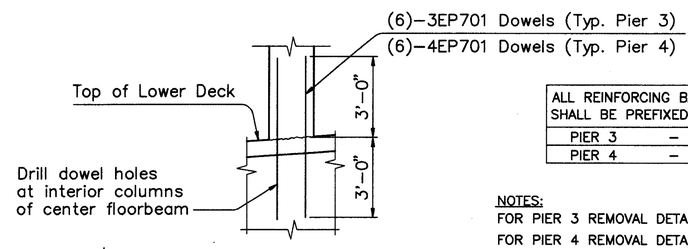

COLUMN DOWEL DETAIL AT CENTER FLOORBEAM

ALL REINFORCING BAR MARKS SHALL BE PREFIXED AS FOLLOWS:		
PIER 3	–	P3LES
PIER 4	–	P4LES

NOTES:

FOR PIER 3 REMOVAL DETAILS SEE SHEET 55/270.
FOR PIER 4 REMOVAL DETAILS SEE SHEET 56/270.
FOR PIER 3 REPLACEMENT DETAILS SEE SHEET 79/270.
FOR PIER 4 REPLACEMENT DETAILS SEE SHEET 80/270.
FOR SPAN 4 LOWER DECK DETAILS SEE SHEETS 99/270, 100/270 AND 101/270.

REINFORCEMENT BAR LAP LENGTH SHALL BE 1'–6" MINIMUM.

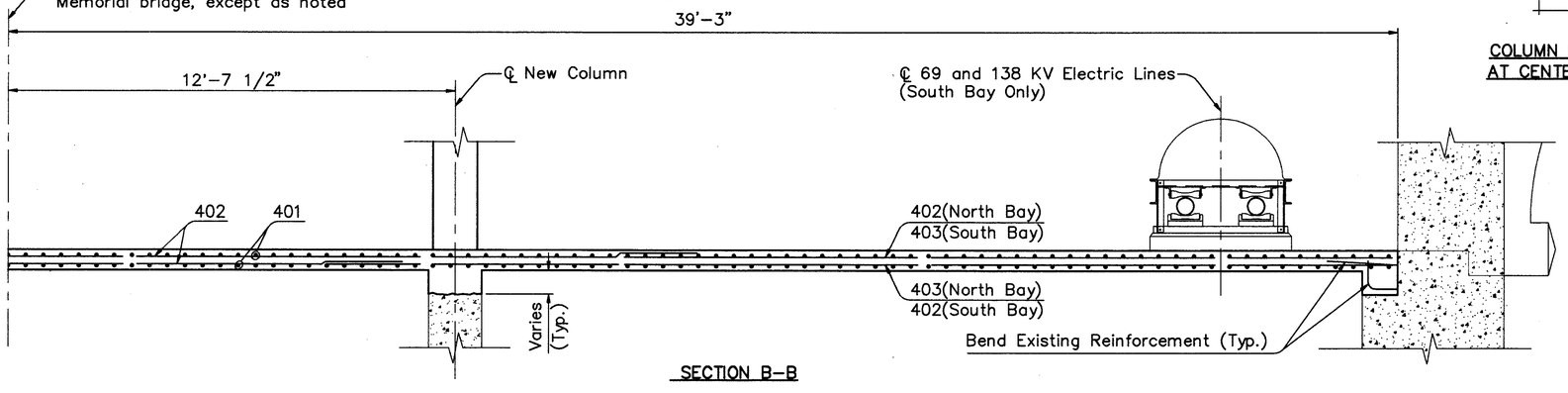

SECTION B–B

COUNTY BRIDGE NO. 84

HOWARD NEEDLES TAMMEN & BERGENDOFF
ARCHITECTS ENGINEERS PLANNERS
HNTB

LOWER DECK DETAILS
PIERS 3 AND 4
BR. NO. CUY – 6 – 1499
REHABILITATION OF
VETERANS MEMORIAL BRIDGE
(U.S. 6, 20, 42 & S.R. 3 OVER CUYAHOGA RIVER)

CLEVELAND CUYAHOGA COUNTY OHIO

DRAWN B.E.B.	TRACED B.E.B.	CHECKED W.D.D.	REVIEWED C.A.B.	REVISED
DATE 6/25/93	DATE 6/25/93	DATE 3/9/94	DATE 3/31/94	SHEET 98/270

\11646\LDP3.DWG

FHWA REGION	STATE	PROJECT	
5	OHIO		

231/412

CUYAHOGA COUNTY
CUY – 6 – 14.99

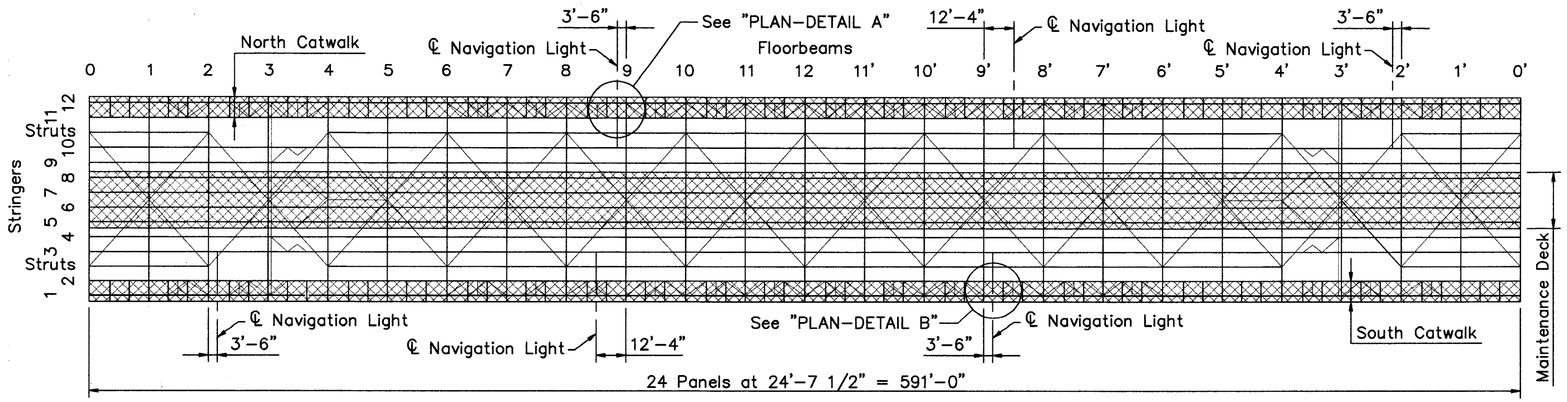

LOCATION PLAN

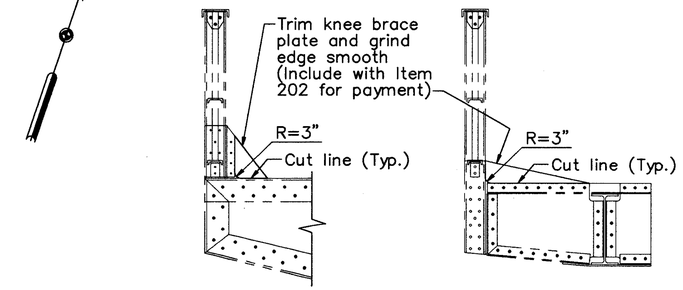

DETAIL C

NOTE A:
Hand tighten bolts and tack weld nut to bolt.

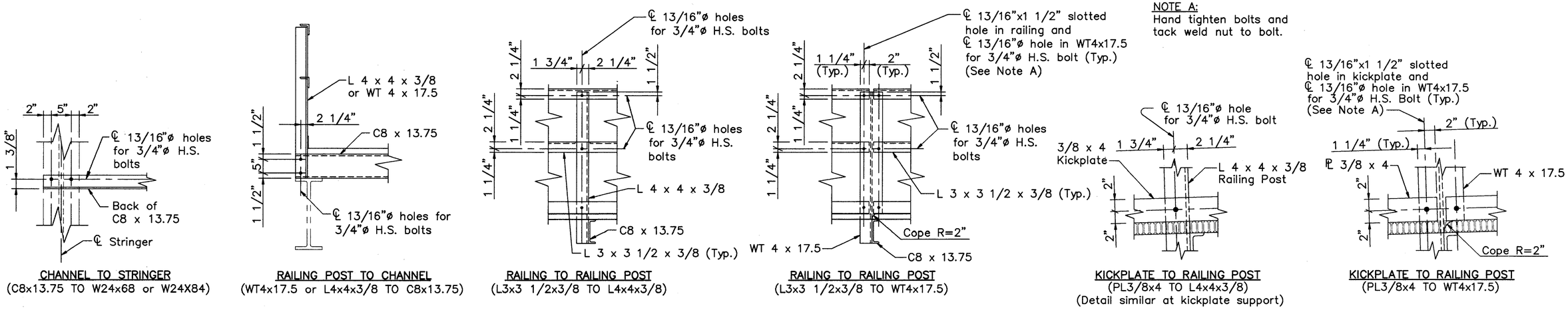

TYPICAL CATWALK CONNECTION DETAILS

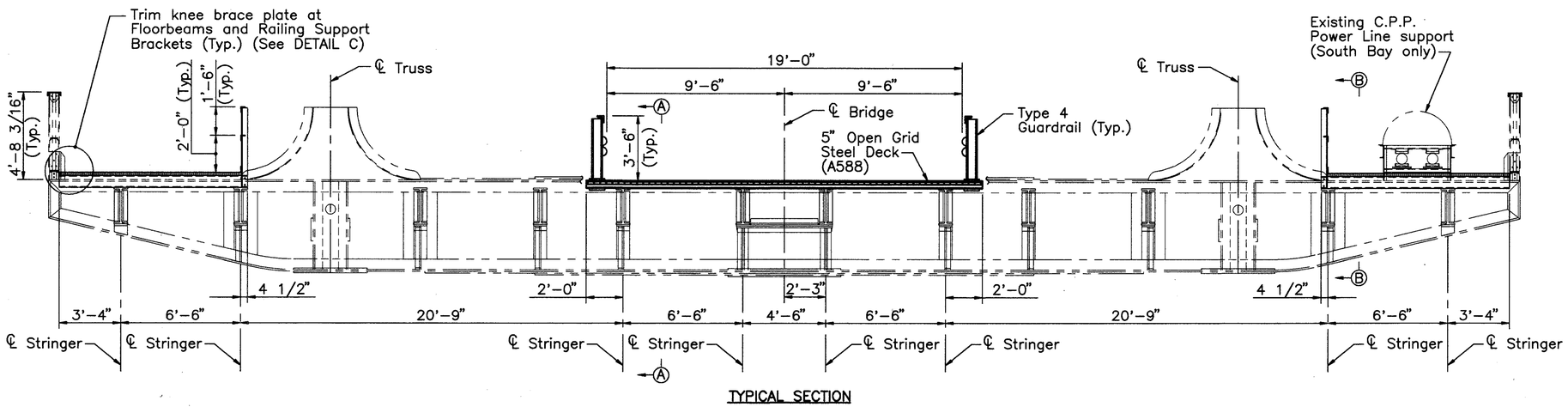

TYPICAL SECTION

NOTES:

For PLAN–DETAIL A and PLAN–DETAIL B, See sheet 101/270.

For Sections A–A and B–B, See sheet 100/270.

For Utility Support Details, see sheets 232/270 and 233/270.

For additional Notes, See sheet 100/270.

COUNTY BRIDGE NO. 84

HOWARD NEEDLES TAMMEN & BERGENDOFF
ARCHITECTS ENGINEERS PLANNERS
HNTB

LOWER DECK DETAILS
SPAN 4
BR. NO. CUY – 6 – 1499
REHABILITATION OF
VETERANS MEMORIAL BRIDGE
(U.S. 6, 20, 42 & S.R. 3 OVER CUYAHOGA RIVER)
CLEVELAND CUYAHOGA COUNTY OHIO

DRAWN	TRACED	CHECKED	REVIEWED	REVISED
ADY	ADY	JLV	CAB	
DATE 03/24/94	DATE 03/24/94	DATE 03/31/94	DATE 04/05/94	SHEET 99/270

\11646\CONCRETE\LDSP4

FHWA REGION	STATE	PROJECT	
5	OHIO		

232/412

CUYAHOGA COUNTY
CUY – 6 – 14.99

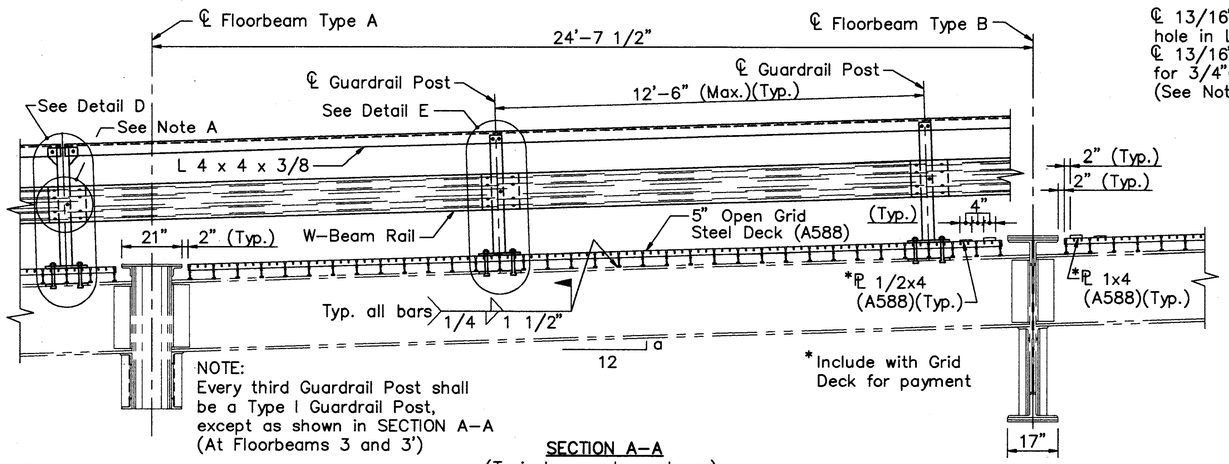

SECTION A–A
(Typical, except as shown)

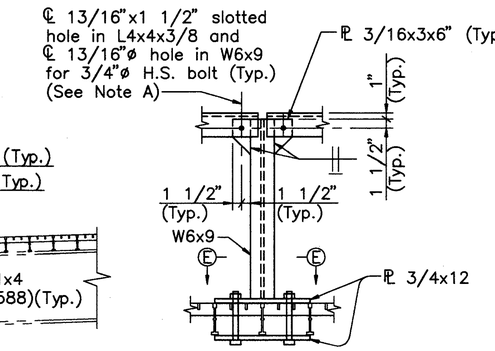

DETAIL D
(Type I Guardrail Post)
(W–Beam Rail not shown)

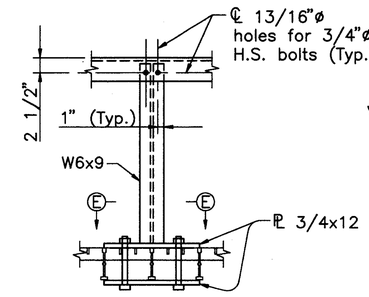

DETAIL E
(Type II Guardrail Post)
(W–Beam Rail not shown)

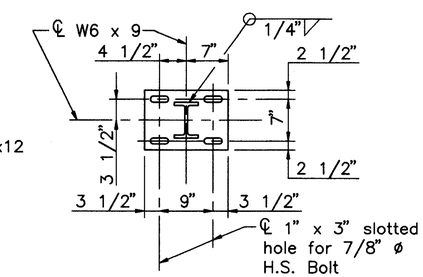

SECTION E–E
(Open Grid Deck not shown)

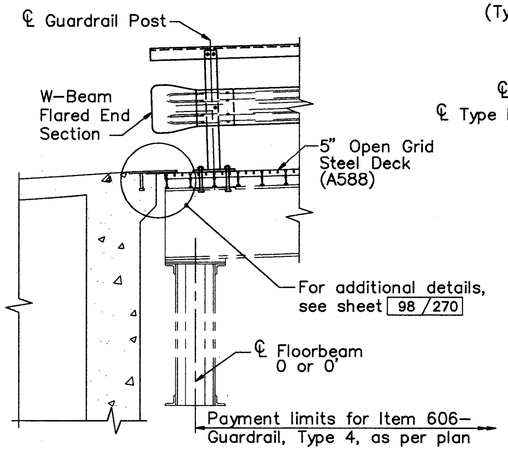

SECTION A–A
(At Floorbeams 0 and 0')

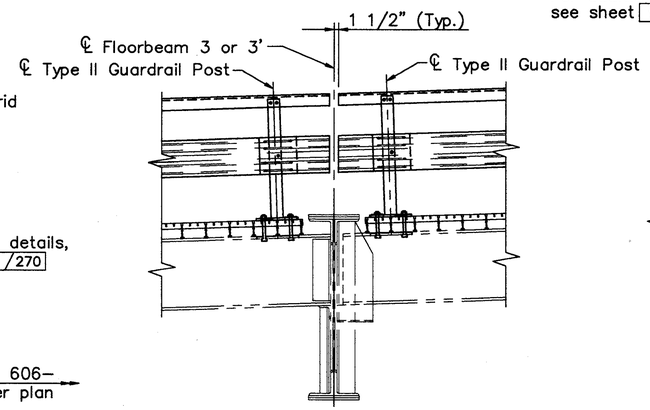

SECTION A–A
(At Floorbeams 3 and 3')

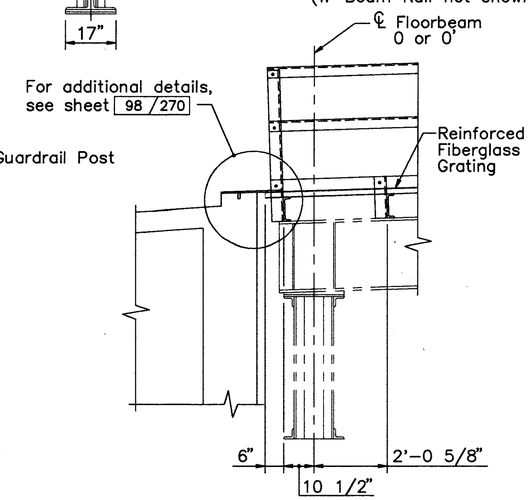

SECTION B–B
(At Floorbeams 0 and 0')

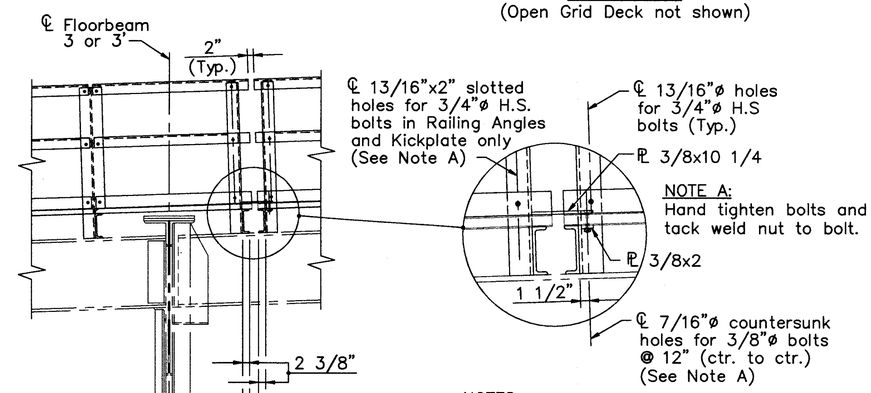

SECTION B–B
(At Floorbeams 3 and 3')

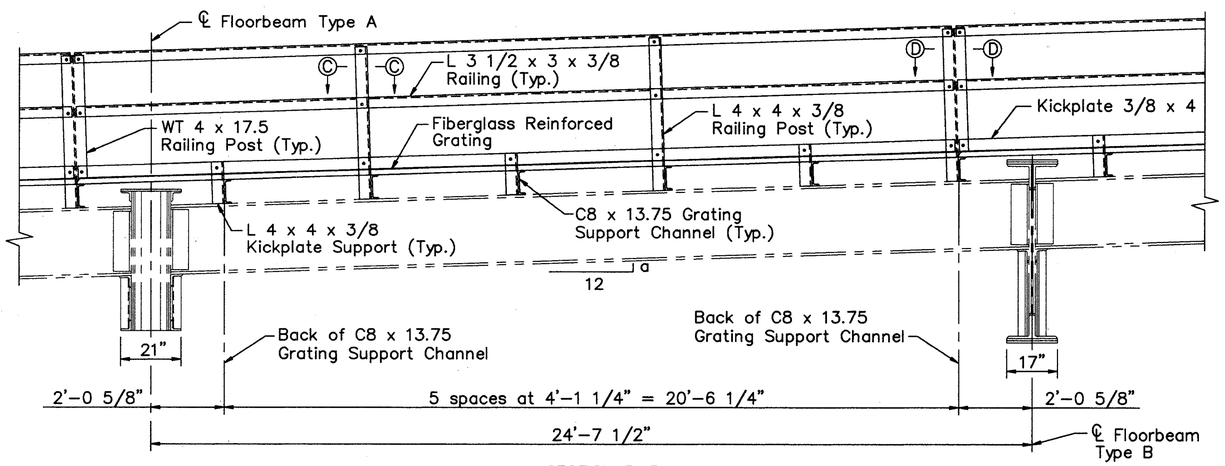

SECTION B–B

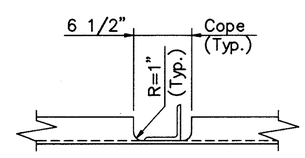

SECTION C–C
(Typical at L4x4 Railing Posts)

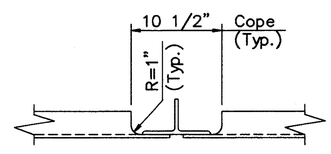

SECTION D–D
(Typical at WT Railing Posts)

Floorbeam	Panel	FB Type	a
0		A	
	1		3/8
1		A	
	2		3/8
2		A	
	3		3/8
3		B	
	4		3/8
4		B	
	5		11/32
5		B	
	6		5/16
6		B	
	7		1/4
7		B	
	8		7/32
8		B	
	9		5/32
9		B	
	10		1/8
10		B	
	11		1/16
11		B	
	12		1/32
12		B	

NOTE:
Symmetrical about ℄ Floorbeam 12.

NOTES:

For TYPICAL CATWALK CONNECTION DETAILS, See sheet 99/270.

For location of Sections A–A and B–B, See sheet 99/270.

For additional Catwalk Details, See sheet 101/270.

For additional Guardrail details, see standard construction drawings GR–1.1, 5–6–91 and GR–1.2, 10–30–92.

The Type I and Type II Guardrail Posts, as shown in DETAILS "D" and "E" respectively, W–Beam Rails and Flared End Sections, and all bolts, washers, and nuts used for fastening the aforementioned steel shall be galvanized in accordance with 711.02 and shall be included with ITEM 606–GUARDRAIL, TYPE 4, AS PER PLAN for payment.

The L4x4x3/8 above the guardrail shall be included with ITEM 513–STRUCTURAL STEEL (AISC CATEGORY I), AS PER PLAN for payment.

The Grating Support Channels, Railing Posts, Railings, Kickplate Supports, Kickplates, and all bolts, washers, and nuts used for fastening the aforementioned steel shall be included with ITEM 513–STRUCTURAL STEEL, (AISC CATEGORY I), AS PER PLAN for payment.

COUNTY BRIDGE NO. 84

HOWARD NEEDLES TAMMEN & BERGENDOFF
ARCHITECTS ENGINEERS PLANNERS
HNTB

LOWER DECK DETAILS
SPAN 4
BR. NO. CUY – 6 – 1499
REHABILITATION OF
VETERANS MEMORIAL BRIDGE
(U.S. 6, 20, 42 & S.R. 3 OVER CUYAHOGA RIVER)

CLEVELAND CUYAHOGA COUNTY OHIO

DRAWN	TRACED	CHECKED	REVIEWED	REVISED
ADY	ADY	JLV	CAB	
DATE 03/24/94	DATE 03/24/94	DATE 03/31/94	DATE 04/05/94	SHEET 100/270

\11646\CONCRETE\LDSP4

FHWA REGION	STATE	PROJECT	
5	OHIO		

233/412

CUYAHOGA COUNTY
CUY – 6 – 14.99

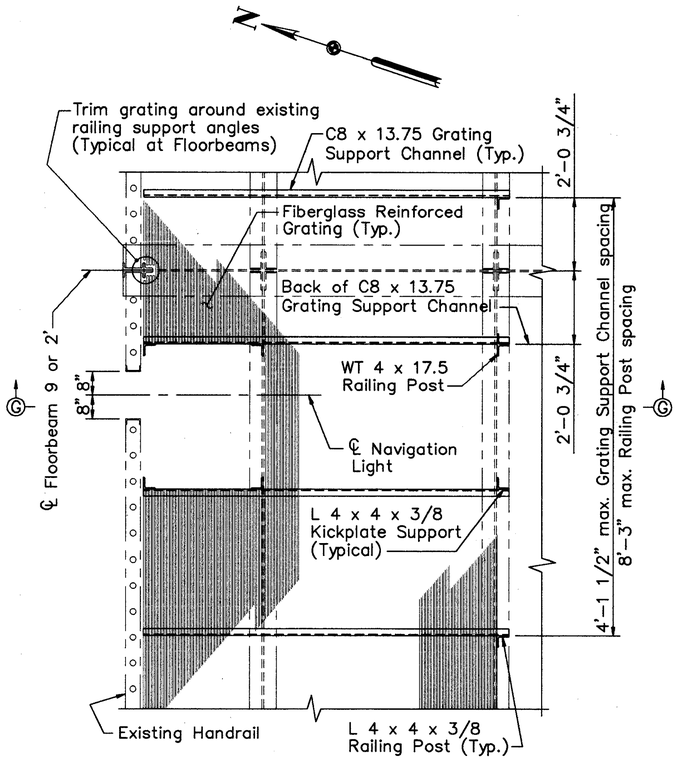

PLAN–DETAIL A
(Typical North Bay only)
(Detail between floorbeams 8' and 9' similar)
(Railing Angles not shown)

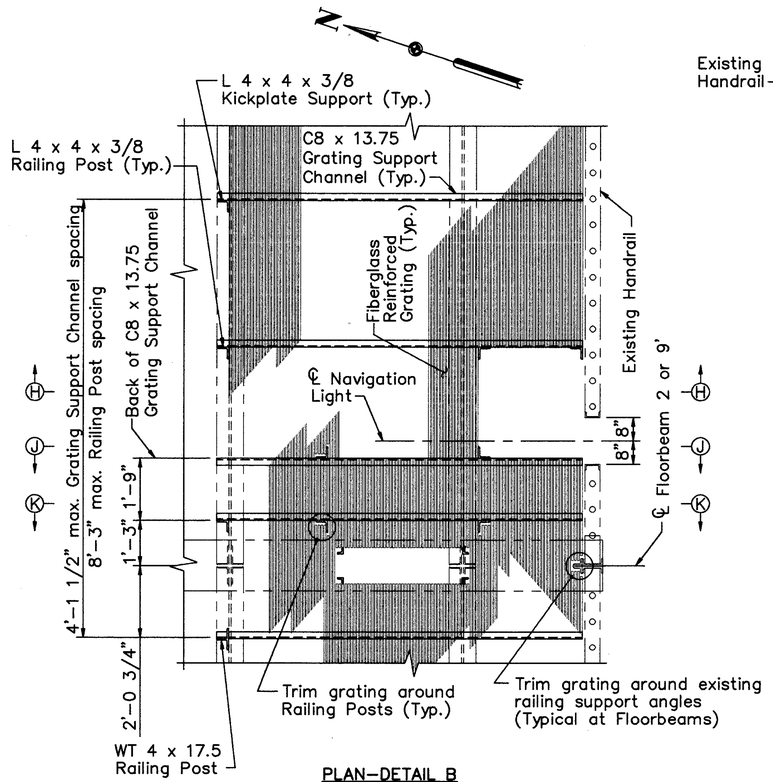

PLAN–DETAIL B
(Typical South Bay only)
(Detail between floorbeams 8 and 9 similar)
(Railing Angles not shown)

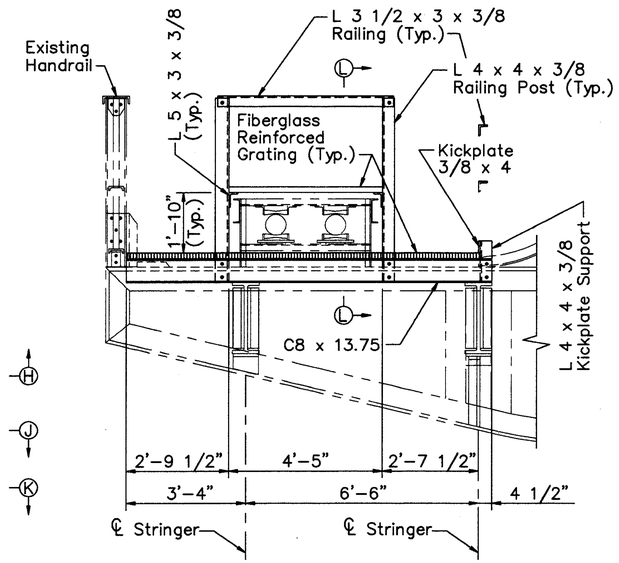

SECTION K–K

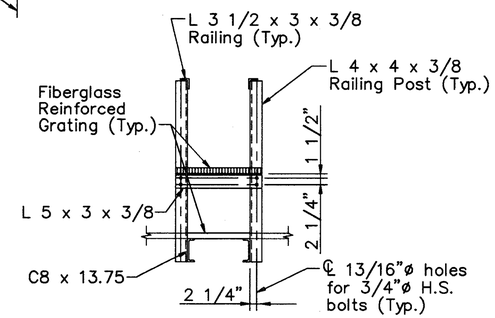

SECTION L–L
(CPP Lines not shown)

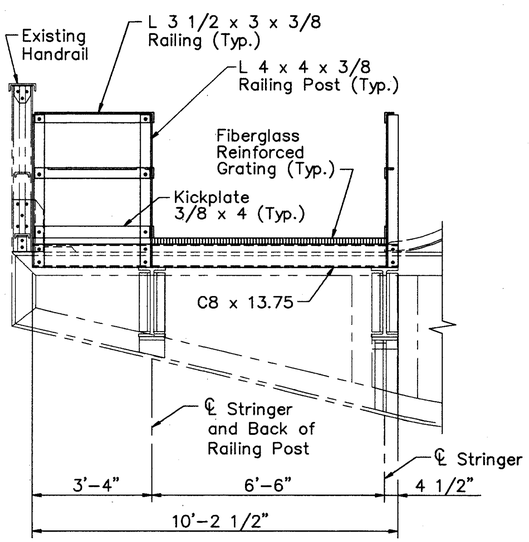

SECTION G–G

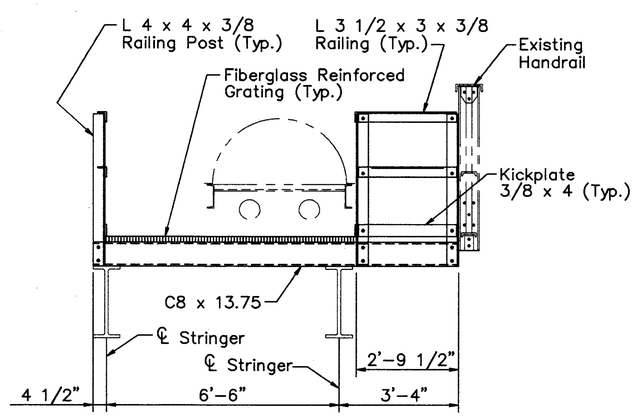

SECTION H–H

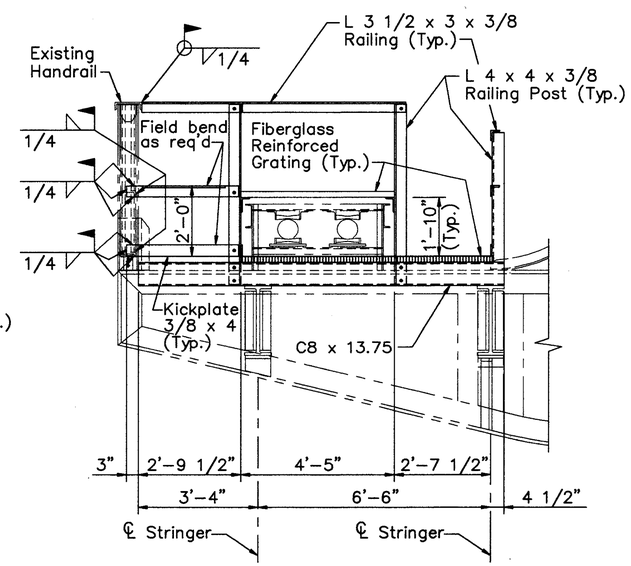

SECTION J–J

NOTES:

For TYPICAL CATWALK CONNECTION DETAILS, See sheet 99/270.

For location of PLAN–DETAIL A and PLAN–DETAIL B, See sheet 99/270.

For additional Catwalk Details, See sheet 100/270.

For Utility Support Details, see sheets 232/270 and 233/270.

For additional Notes, See sheet 100/270.

COUNTY BRIDGE NO. 84

HOWARD NEEDLES TAMMEN & BERGENDOFF
ARCHITECTS ENGINEERS PLANNERS
HNTB

LOWER DECK DETAILS
SPAN 4
BR. NO. CUY – 6 – 1499
REHABILITATION OF
VETERANS MEMORIAL BRIDGE
(U.S. 6, 20, 42 & S.R. 3 OVER CUYAHOGA RIVER)

CLEVELAND CUYAHOGA COUNTY OHIO

DRAWN	TRACED	CHECKED	REVIEWED	REVISED
ADY	ADY	JLV	CAB	
DATE 03/24/94	DATE 03/24/94	DATE 03/31/94	DATE 04/05/94	SHEET 101/270

\11646\CONCRETE\LDSP4

FHWA REGION	STATE	PROJECT	
5	OHIO		

234/412

CUYAHOGA COUNTY
CUY – 6 – 14.99

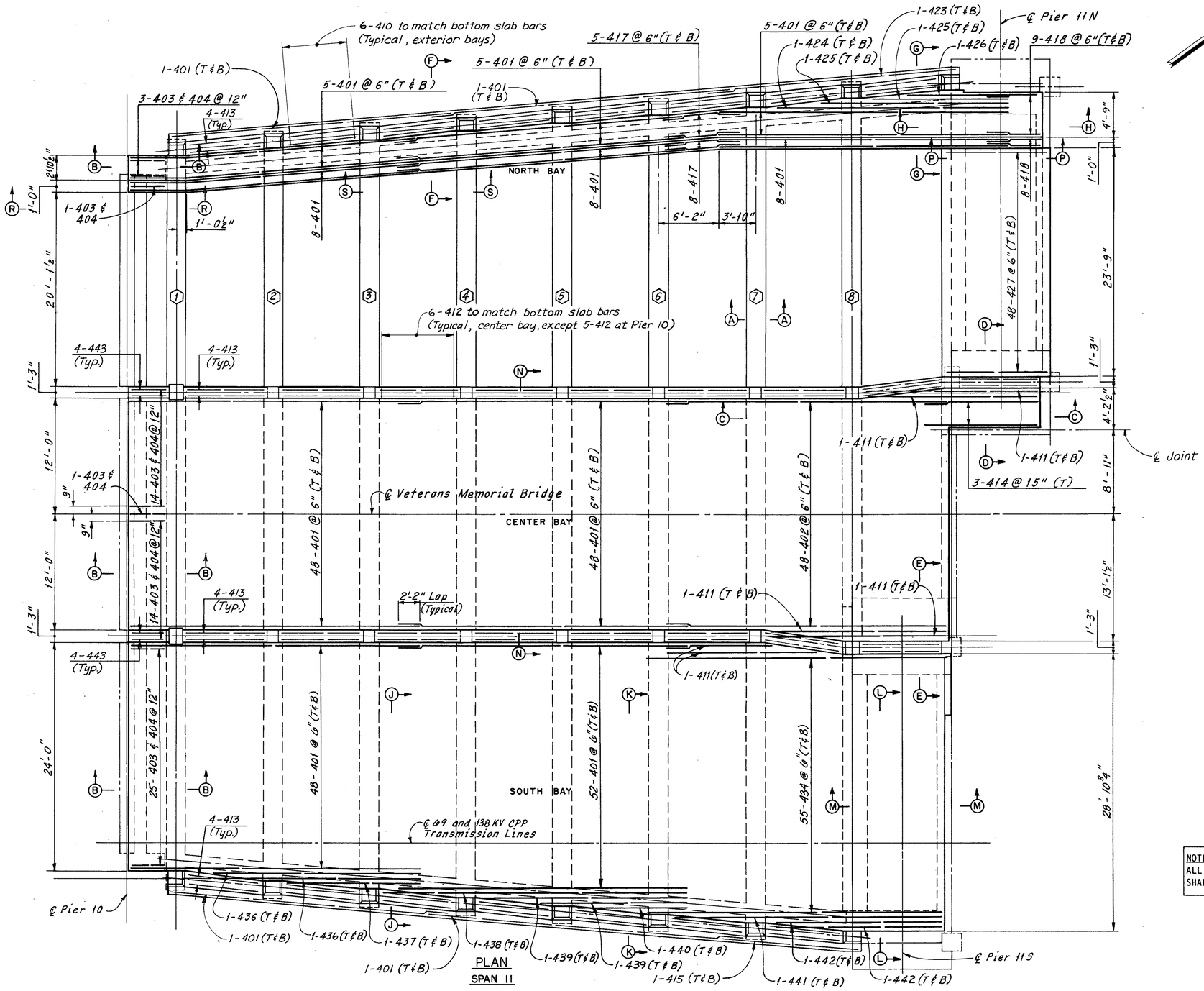

PLAN
SPAN 11

NOTE:

TRANSVERSE REINFORCEMENT IS NOT SHOWN ON THIS SHEET.
SEE LONGITUDINAL SECTIONS, SHEET 104/270 FOR TRANSVERSE REINFORCEMENT.

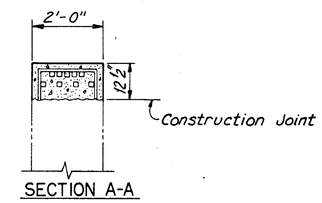

SECTION A-A

NOTES:
FOR SECTIONS B-B THRU N-N, SEE SHEET 103/270

FOR TYPICAL LONGITUDINAL SECTIONS AND SECTIONS P-P THRU S-S, SEE SHEET 104/270

THE FOLLOWING ABBREVIATIONS ARE USED:

T = TOP
B = BOTTOM

——— INDICATES EXISTING STRUCTURE

⬡ INDICATES FLOORBEAM DESIGNATION

NOTE:
ALL REINFORCING BAR MARKS SHALL BE PREFIXED 11LES

COUNTY BRIDGE NO. 84

HOWARD NEEDLES TAMMEN & BERGENDOFF
ARCHITECTS ENGINEERS PLANNERS
HNTB

LOWER DECK PLAN
SPAN 11
BR. NO. CUY – 6 – 1499
REHABILITATION OF
VETERANS MEMORIAL BRIDGE
(U.S. 6, 20, 42 & S.R. 3 OVER CUYAHOGA RIVER)
CLEVELAND CUYAHOGA COUNTY OHIO

DRAWN C.K.B.	TRACED C.E.P.	CHECKED W.J.V.	REVIEWED C.A.B.	REVISED
DATE 12/6/90	DATE 12/8/90	DATE 1/29/91	DATE 4/5/94	SHEET 102/270

FHWA REGION	STATE	PROJECT	
5	OHIO		

235 / 412

CUYAHOGA COUNTY
CUY – 6 – 14.99

Note A:
At locations where railing is not replaced, epoxy inject interface of existing lower deck railing and new lower deck curb.

A BAR MARKS	
LOCATION	A BAR
CENTER BAY	405
NORTH BAY	419
SOUTH BAY	435

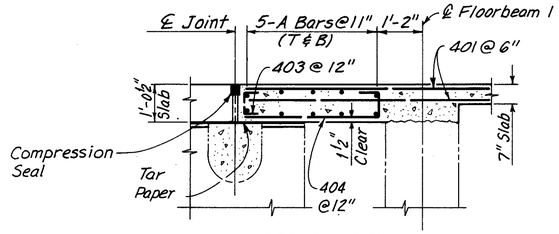

SECTION B-B

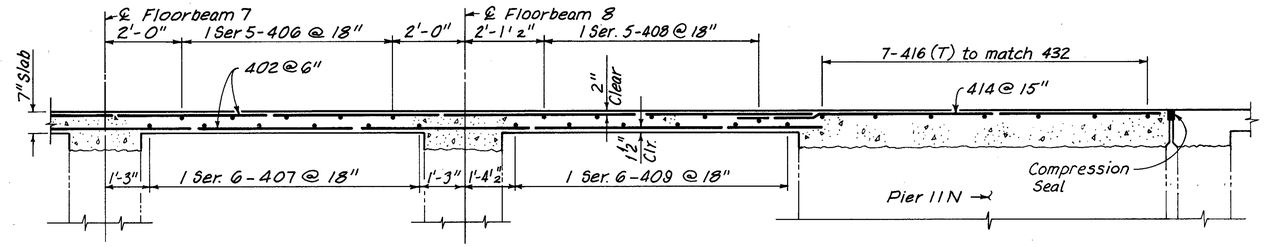

SECTION C-C

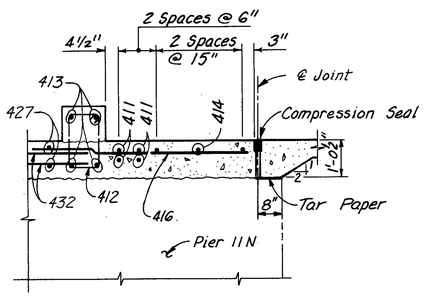

SECTION D-D

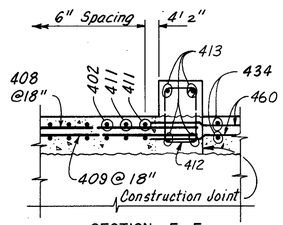

SECTION E-E

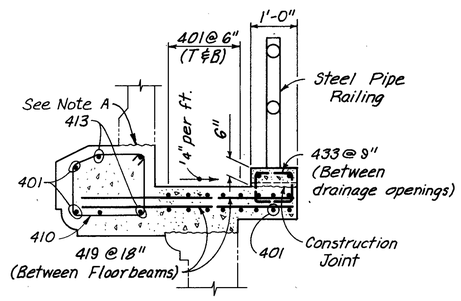

SECTION F-F

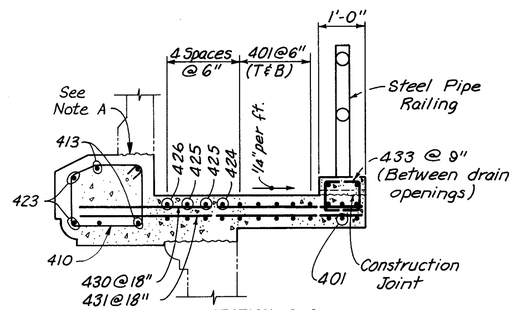

SECTION G-G

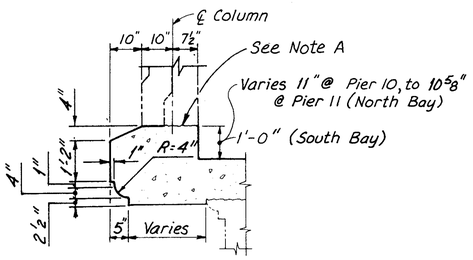

FASCIA DETAIL

NOTE:
ALL REINFORCING BAR MARKS SHALL BE PREFIXED 11LES

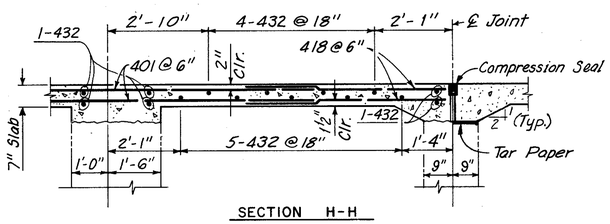

SECTION H-H

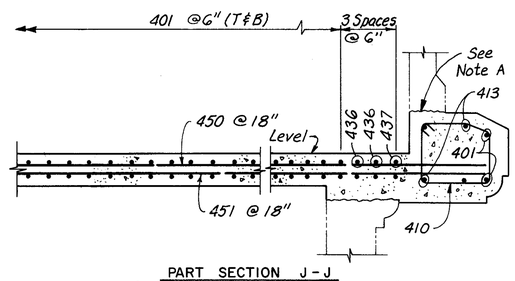

PART SECTION J-J
(CPP Electric Lines not shown)

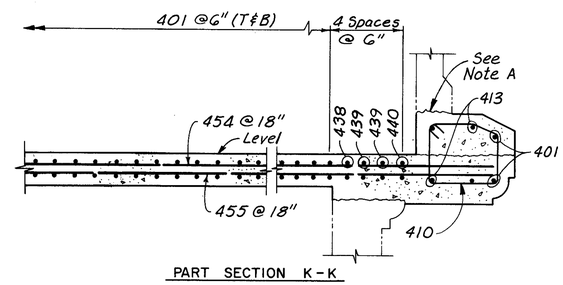

PART SECTION K-K
(CPP Electric Lines not shown)

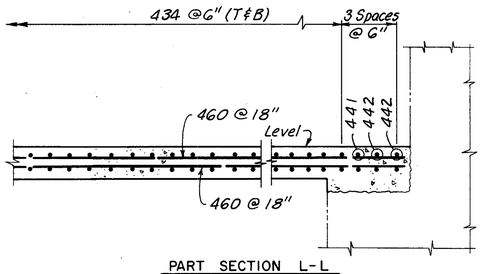

PART SECTION L-L
(CPP Electric Lines not shown)

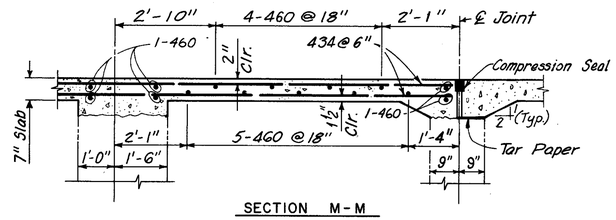

SECTION M-M

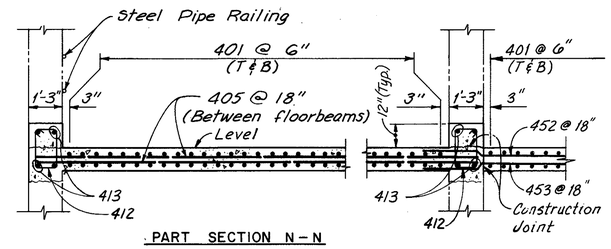

PART SECTION N-N

NOTES:
FOR LOCATION OF SECTIONS, SEE SHEET 102/270.

FOR DETAILS OF COMPRESSION SEAL, SEE SHEET 224/270.

THE FOLLOWING ABBREVIATIONS ARE USED:

T = TOP
B = BOTTOM

——— INDICATES EXISTING STRUCTURE.

COUNTY BRIDGE NO. 84

HOWARD NEEDLES TAMMEN & BERGENDOFF
ARCHITECTS ENGINEERS PLANNERS
HNTB

LOWER DECK SECTIONS
SPAN 11
BR. NO. CUY – 6 – 1499
REHABILITATION OF
VETERANS MEMORIAL BRIDGE
(U.S. 6, 20, 42 & S.R. 3 OVER CUYAHOGA RIVER)

CLEVELAND CUYAHOGA COUNTY OHIO

DRAWN C.K.B.	TRACED G.C.A.	CHECKED W.J.V.	REVIEWED C.A.B.	REVISED
DATE 12/13/90	DATE 12/15/90	DATE 1/29/91	DATE 4/5/94	SHEET 103/270

FHWA REGION	STATE	PROJECT	
5	OHIO		

236 / 412

CUYAHOGA COUNTY
CUY – 6 – 14.99

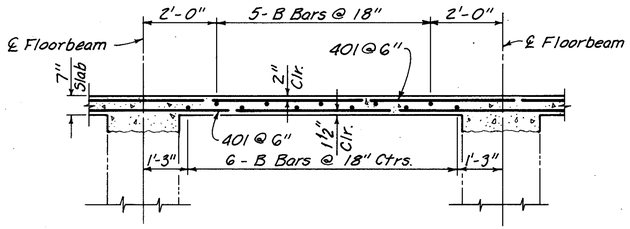

FB 1 TO FB 7 (CENTER BAY)
FB 1 TO FB 6 (NORTH BAY)

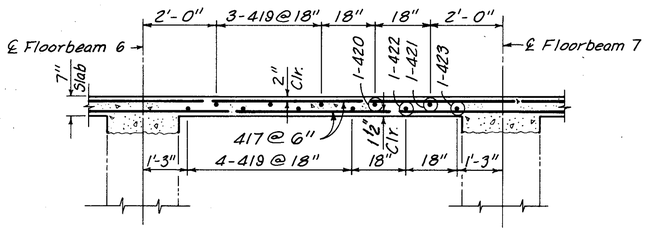

FB 6 TO FB 7 (NORTH BAY)

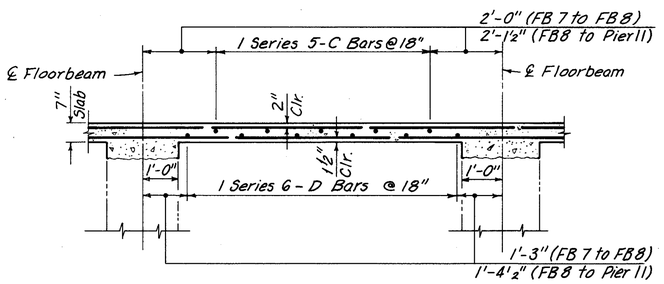

FB 7 TO PIER 11N (NORTH BAY)

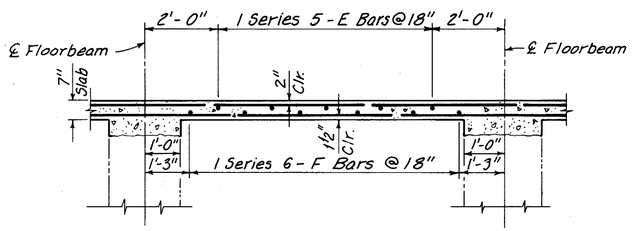

FB 1 TO PIER 11S (SOUTH BAY)

TYPICAL LONGITUDINAL SECTIONS

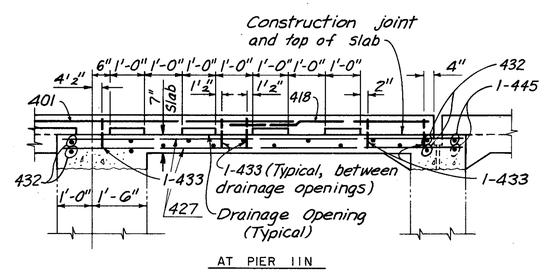

AT PIER 11N

SECTION P-P
(Railing Not Shown)

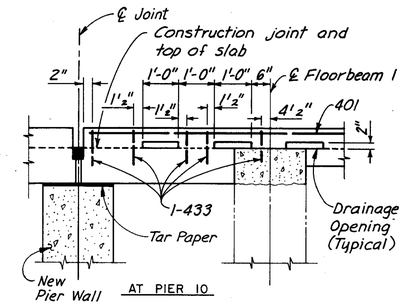

AT PIER 10

SECTION R-R
(Railing Not Shown)

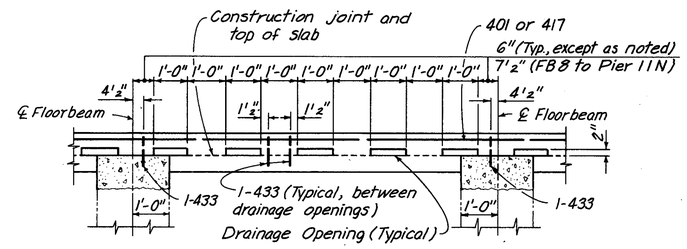

TYPICAL INTERIOR BAY

SECTION S-S
(Railing Not Shown)

B BAR MARKS	
LOCATION	B BAR
CENTER BAY	405
NORTH BAY	419

C BAR AND D BAR MARKS		
LOCATION	C BAR	D BAR
FB7 TO FB8	428	429
FB8 TO PIER 11N	430	431

E BAR AND F BAR MARKS		
LOCATION	E BAR	F BAR
FB1 TO FB2	446	447
FB2 TO FB3	448	449
FB3 TO FB4	450	451
FB4 TO FB5	452	453
FB5 TO FB6	454	455
FB6 TO FB7	456	457
FB7 TO PIER 11S	458	459

NOTE:
ALL REINFORCING BAR MARKS SHALL BE PREFIXED 11LES

NOTES:
FOR LOCATION OF SECTIONS, SEE SHEET 102/270

THE FOLLOWING ABBREVIATION IS USED:

FB = FLOORBEAM

– – – – INDICATES EXISTING STRUCTURE

COUNTY BRIDGE NO. 84

HOWARD NEEDLES TAMMEN & BERGENDOFF
ARCHITECTS ENGINEERS PLANNERS
HNTB

LOWER DECK SECTIONS
SPAN 11
BR. NO. CUY – 6 – 1499
REHABILITATION OF
VETERANS MEMORIAL BRIDGE
(U.S. 6, 20, 42 & S.R. 3 OVER CUYAHOGA RIVER)

CLEVELAND CUYAHOGA COUNTY OHIO

DRAWN C.K.B.	TRACED G.C.A.	CHECKED W.J.V.	REVIEWED C.A.B.	REVISED
DATE 12/13/90	DATE 12/17/90	DATE 1/29/91	DATE 4/5/94	SHEET 104/270

FHWA REGION	STATE	PROJECT	
5	OHIO		

237 / 412

CUYAHOGA COUNTY
CUY – 6 – 14.99

NOTE:

TRANSVERSE REINFORCEMENT IS NOT SHOWN ON THIS SHEET.
SEE LONGITUDINAL SECTIONS, SHEET 106/270 FOR TRANSVERSE REINFORCEMENT.

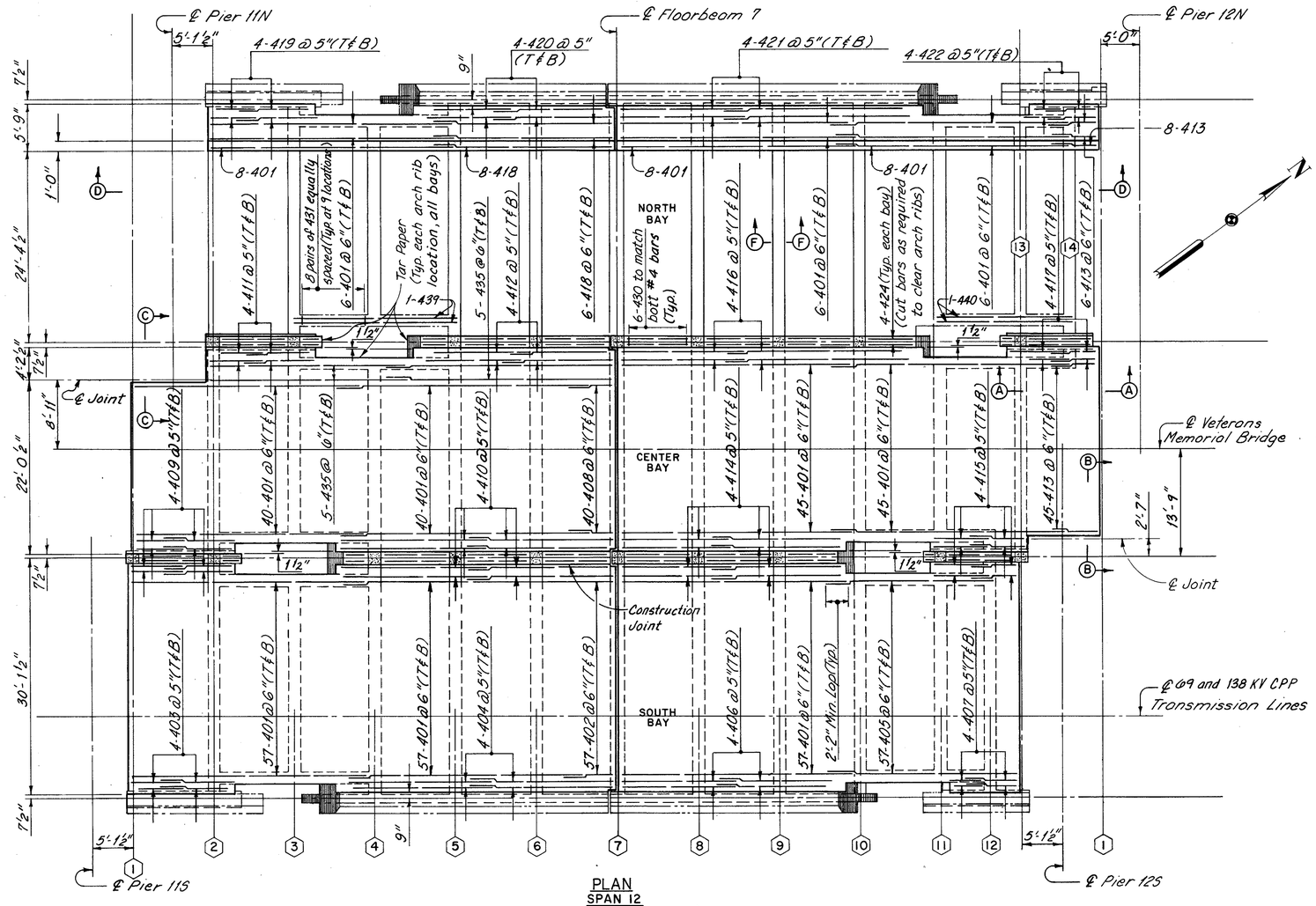

PLAN
SPAN 12
(Arch ribs not shown)

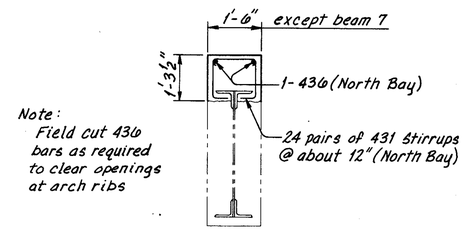

SECTION F–F
(Typ. except beam 7)

NOTE:
ALL REINFORCING BAR MARKS SHALL BE PREFIXED 12LES

NOTES:
FOR SECTION D-D, SEE SHEET 107/270.

FOR TYPICAL LONGITUDINAL SECTIONS AND SECTIONS A-A THRU C-C, SEE SHEET 106/270.

THE FOLLOWING ABBREVIATIONS ARE USED:

T = TOP
B = BOTTOM

——— INDICATES EXISTING STRUCTURE

⬡ INDICATES FLOORBEAM DESIGNATION

COUNTY BRIDGE NO. 84

HOWARD NEEDLES TAMMEN & BERGENDOFF
ARCHITECTS ENGINEERS PLANNERS
HNTB

LOWER DECK PLAN
SPAN 12
BR. NO. CUY – 6 – 1499
REHABILITATION OF
VETERANS MEMORIAL BRIDGE
(U.S. 6, 20, 42 & S.R. 3 OVER CUYAHOGA RIVER)

CLEVELAND CUYAHOGA COUNTY OHIO

DRAWN J.O.L.	TRACED J.L.V.	CHECKED W.J.V.	REVIEWED C.A.B.	REVISED
DATE 3/10/92	DATE 5/5/92	DATE 5/8/92	DATE 4/6/94	SHEET 105/270

FHWA REGION	STATE	PROJECT	
5	OHIO		

238/412

CUYAHOGA COUNTY
CUY – 6 – 14.99

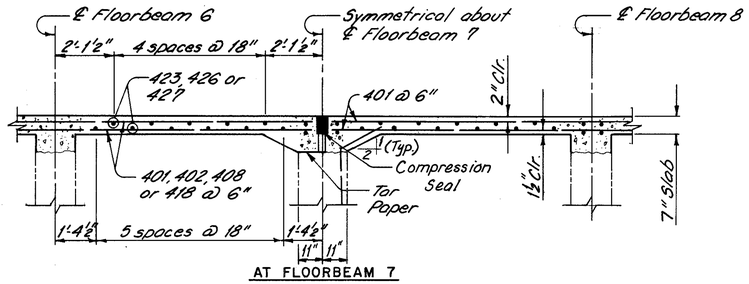

AT FLOORBEAM 7

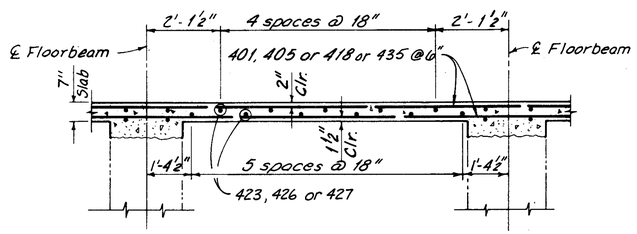

INTERIOR BAY

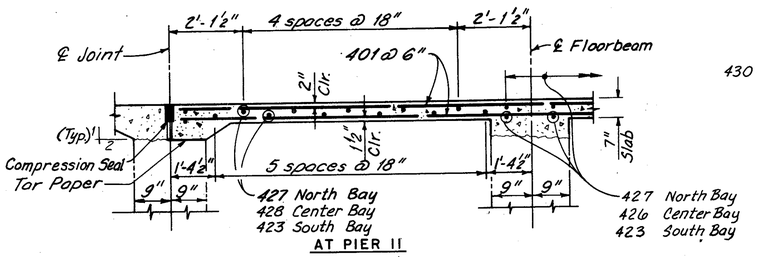

AT PIER 11

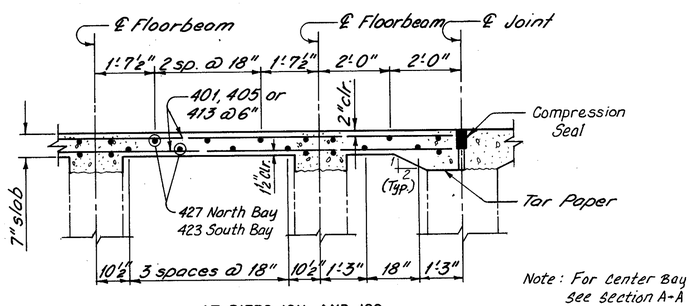

Note: For Center Bay See Section A-A

AT PIERS 12N AND 12S

TYPICAL LONGITUDINAL SECTIONS

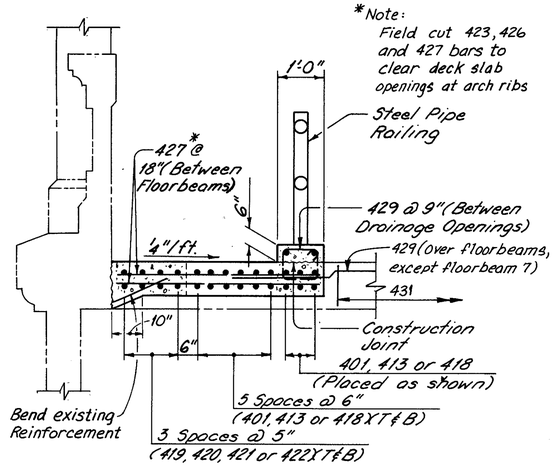

TYPICAL SECTION–NORTH BAY

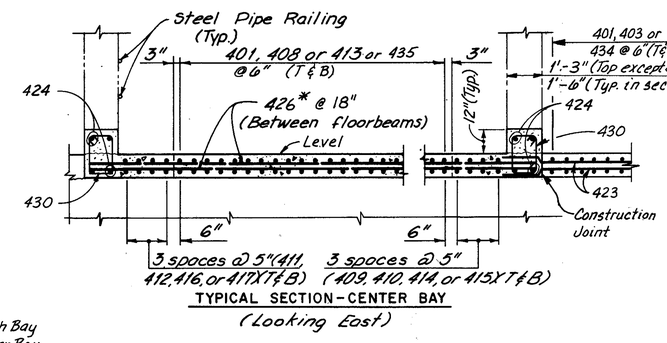

TYPICAL SECTION–CENTER BAY
(Looking East)

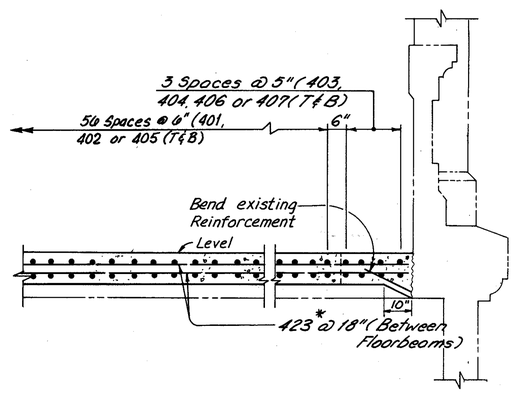

TYPICAL SECTION–SOUTH BAY
(CPP Electric Lines not shown)

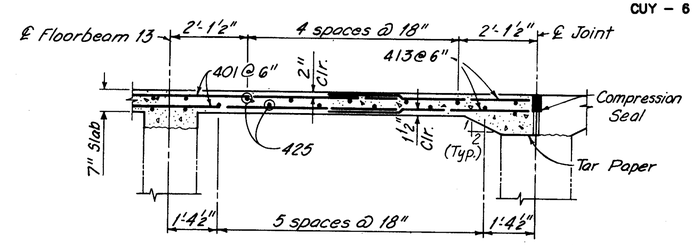

SECTION A–A

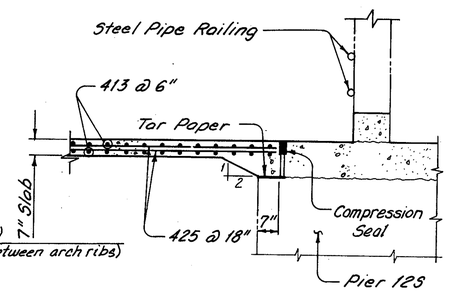

SECTION B–B

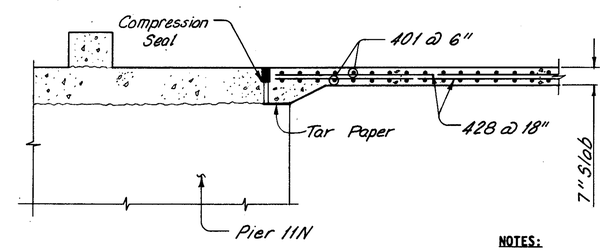

SECTION C–C

NOTE:
ALL REINFORCING BAR MARKS SHALL BE PREFIXED 12LES

NOTES:

FOR LOCATION OF SECTIONS A-A THRU C-C, SEE SHEET 105/270

ENCASED STEEL FLOORBEAMS ARE NOT SHOWN

FOR DETAILS OF COMPRESSION SEAL, SEE SHEET 224/270

THE FOLLOWING ABBREVIATIONS ARE USED:

T = TOP

B = BOTTOM

——— INDICATES EXISTING STRUCTURE.

COUNTY BRIDGE NO. 84

HOWARD NEEDLES TAMMEN & BERGENDOFF
ARCHITECTS ENGINEERS PLANNERS
HNTB

LOWER DECK SECTIONS
SPAN 12
BR. NO. CUY – 6 – 1499
REHABILITATION OF
VETERANS MEMORIAL BRIDGE
(U.S. 6, 20, 42 & S.R. 3 OVER CUYAHOGA RIVER)

CLEVELAND CUYAHOGA COUNTY OHIO

DRAWN J.O.L.	TRACED J.L.V.	CHECKED W.J.V.	REVIEWED C.A.B.	REVISED
DATE 3/10/92	DATE 5/5/92	DATE 5/8/92	DATE 4/6/94	SHEET 106/270

FHWA REGION	STATE	PROJECT	
5	OHIO		

239 / 412

CUYAHOGA COUNTY
CUY – 6 – 14.99

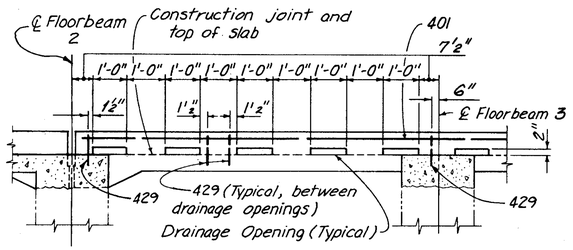

AT PIER 11N

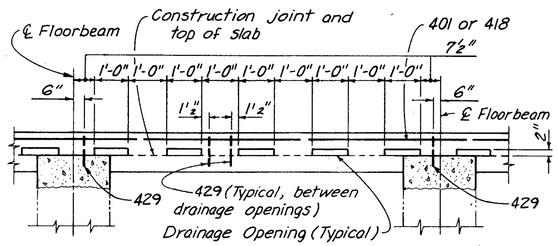

TYPICAL INTERIOR BAY

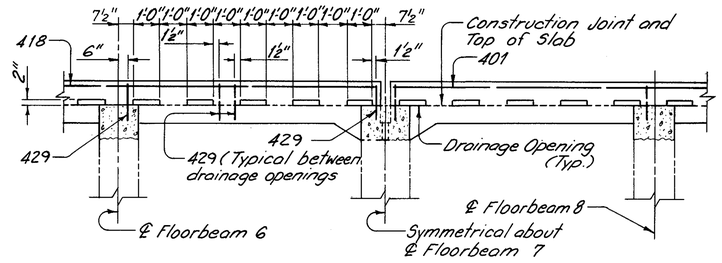

AT FLOORBEAM 7

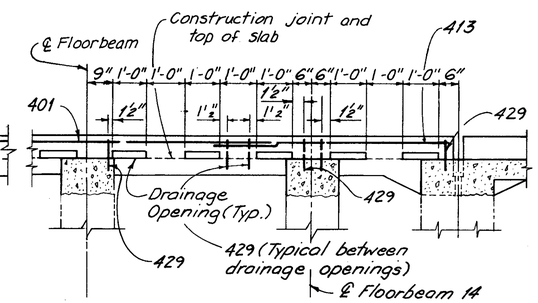

AT PIER 12N

SECTION D-D
(Railing not shown)

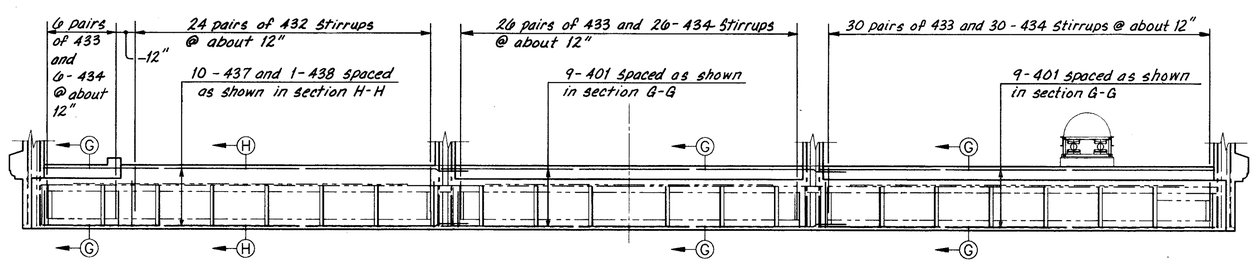

WEST ELEVATION – LOWER DECK FLOORBEAM 12, 7

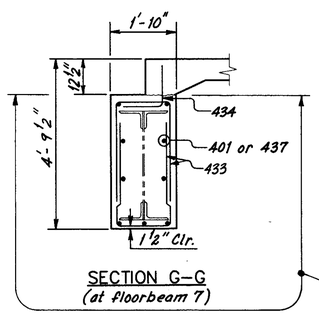

SECTION G-G
(at floorbeam 7)

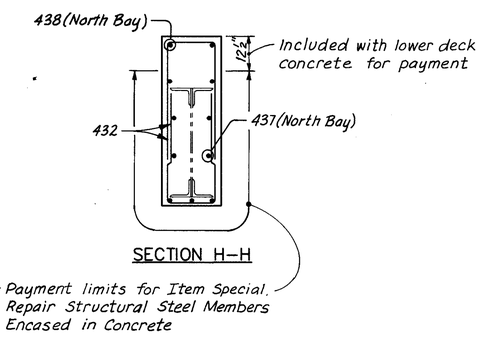

SECTION H-H

NOTE:
ALL REINFORCING BAR MARKS SHALL BE PREFIXED 12LES

NOTES:

FOR LOCATION OF SECTION D–D SEE SHEET 105 / 270

——- - —— INDICATES EXISTING STRUCTURE.

LOWER DECK RAILING AND ENCASED STEEL FLOORBEAMS ARE NOT SHOWN.

COUNTY BRIDGE NO. 84

HOWARD NEEDLES TAMMEN & BERGENDOFF
ARCHITECTS ENGINEERS PLANNERS
HNTB

LOWER DECK SECTIONS
SPAN 12
BR. NO. CUY – 6 – 1499
REHABILITATION OF
VETERANS MEMORIAL BRIDGE
(U.S. 6, 20, 42 & S.R. 3 OVER CUYAHOGA RIVER)

CLEVELAND CUYAHOGA COUNTY OHIO

DRAWN J.O.L.	TRACED J.L.V.	CHECKED W.J.V.	REVIEWED C.A.B.	REVISED
DATE 3/10/92	DATE 5/5/92	DATE 5/6/92	DATE 4/6/94	SHEET 107 / 270

FHWA REGION	STATE	PROJECT	
5	OHIO		

240 / 412

CUYAHOGA COUNTY
CUY – 6 – 14.99

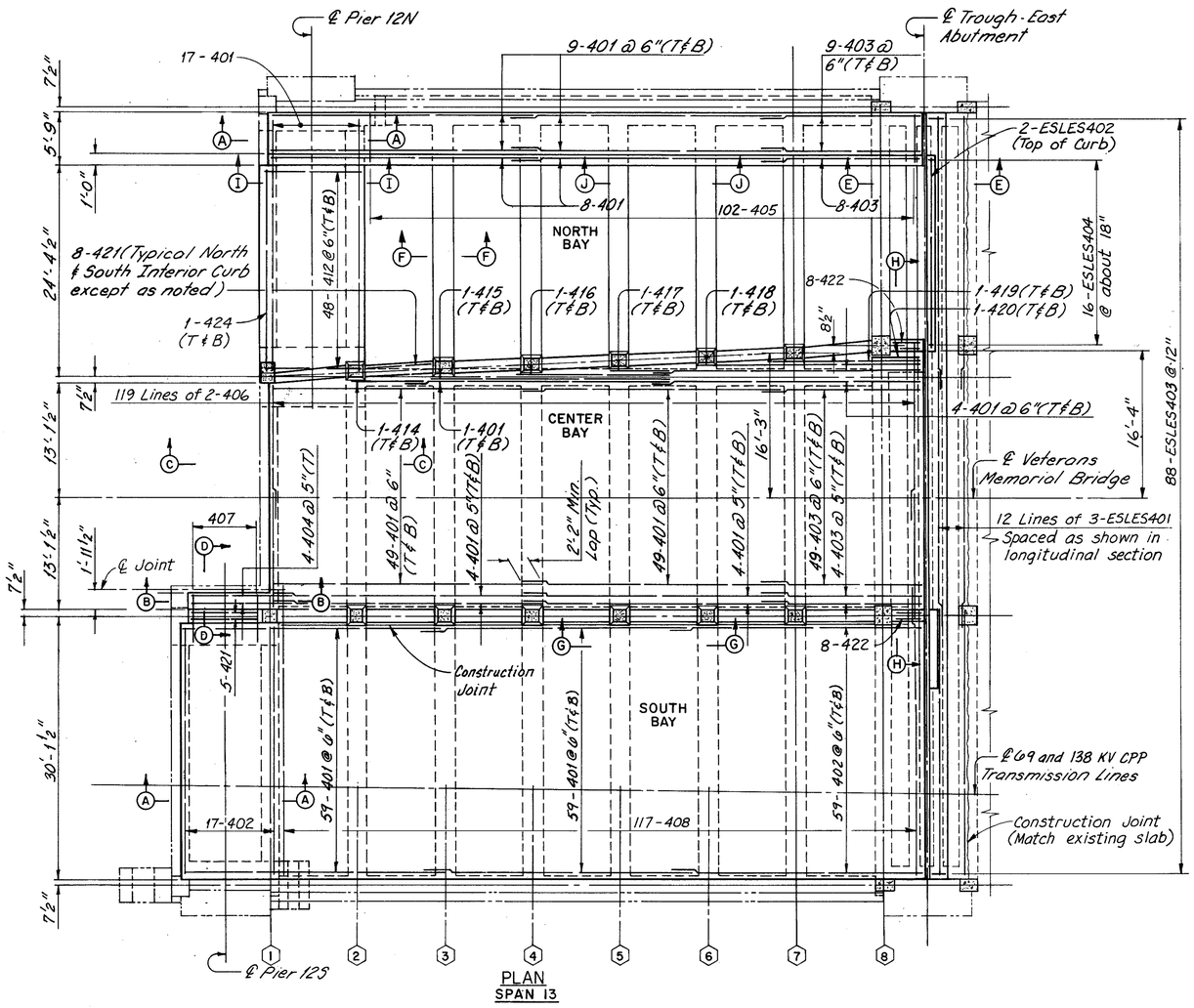

PLAN
SPAN 13

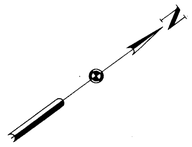

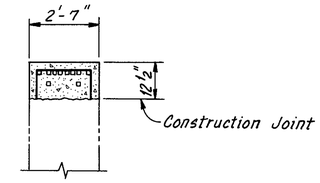

SECTION F-F

NOTE:
ALL REINFORCING BAR MARKS SHALL BE PREFIXED 13LES UNLESS OTHERWISE NOTED

NOTES:
FOR SECTIONS A-A THRU E-E AND I-I AND J-J SEE SHEET 110/270.

FOR TYPICAL LONGITUDINAL SECTIONS AND SECTION G-G AND H-H, SEE SHEET 109/270

THE FOLLOWING ABBREVIATIONS ARE USED:

T = TOP
B = BOTTOM

——— INDICATES EXISTING STRUCTURE.

⬡ INDICATES FLOORBEAM DESIGNATION

COUNTY BRIDGE NO. 84

HOWARD NEEDLES TAMMEN & BERGENDOFF
ARCHITECTS ENGINEERS PLANNERS
HNTB

LOWER DECK PLAN
SPAN 13
BR. NO. CUY – 6 – 1499
REHABILITATION OF
VETERANS MEMORIAL BRIDGE
(U.S. 6, 20, 42 & S.R. 3 OVER CUYAHOGA RIVER)
CLEVELAND CUYAHOGA COUNTY OHIO

DRAWN J.O.L.	TRACED J.L.V.	CHECKED W.J.V.	REVIEWED C.A.B.	REVISED
DATE 3/10/92	DATE 5/5/92	DATE 5/8/92	DATE 4/6/94	SHEET 108/270

FHWA REGION	STATE	PROJECT	
5	OHIO		

241/412

CUYAHOGA COUNTY
CUY – 6 – 14.99

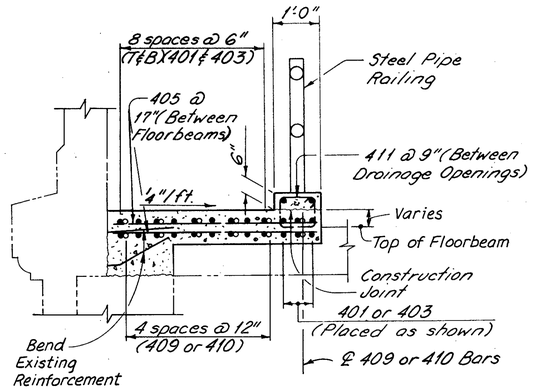

TYPICAL SECTION–NORTH BAY

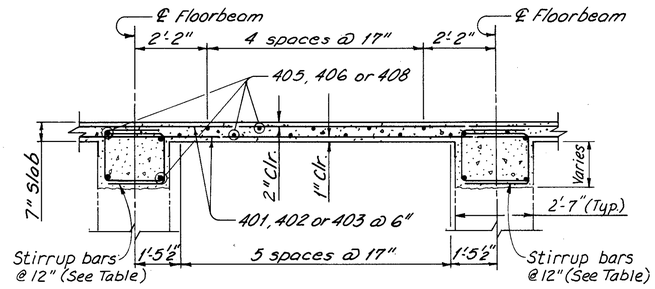

INTERIOR BAY

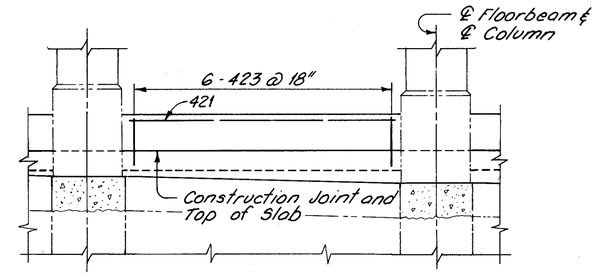

INTERIOR BAY

SECTION G–G
(Railing not shown)
(Curb at Pier 125 similar)

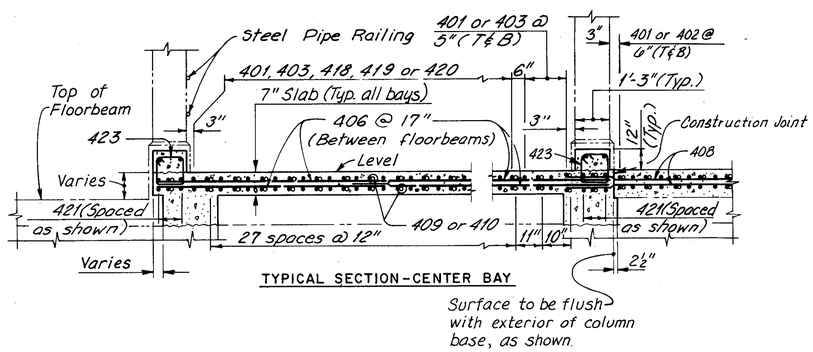

TYPICAL SECTION–CENTER BAY

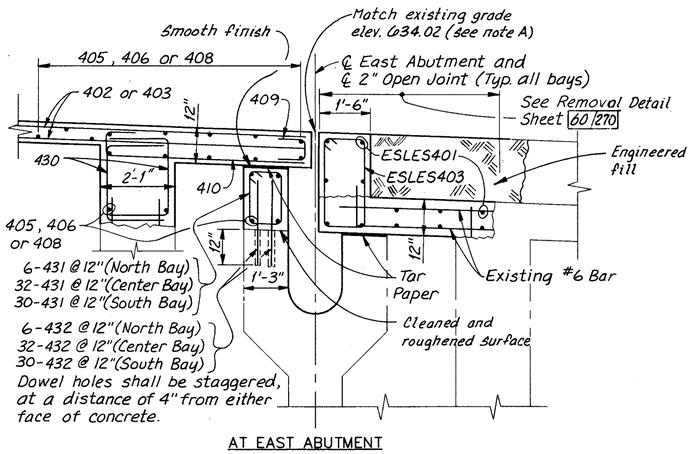

AT EAST ABUTMENT

TYPICAL LONGITUDINAL SECTIONS

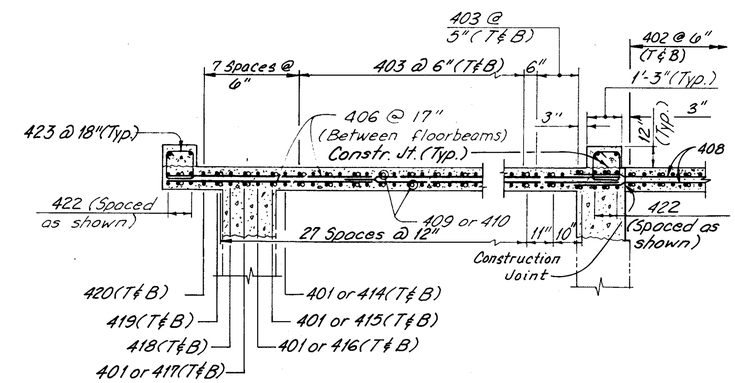

SECTION H–H

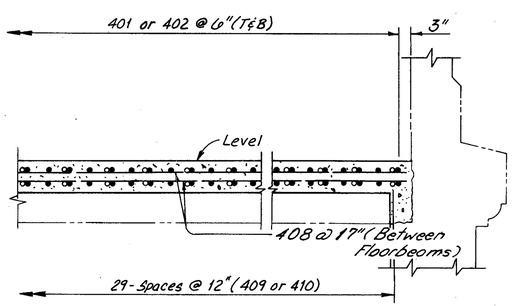

TYPICAL SECTION–SOUTH BAY
(CPP Electric Lines not shown)

STIRRUP BARS OVER LOWER DECK FLOORBEAMS *			
FLOORBEAM	NORTH BAY	CENTER BAY	SOUTH BAY
13–1	—	—	—
13–2	—	—	—
13–3	6–425	28–425	30–425
13–4	6–426	28–426	30–426
13–5	6–427	29–427	30–427
13–6	6–428	29–428	30–428
13–7	6–429	29–429	30–429
13–8	6–430	30–430	30–430

* Quantities shown are the number of pairs of stirrup bars. (See note A)

NOTE:
ALL REINFORCING BAR MARKS SHALL BE PREFIXED 13LES UNLESS OTHERWISE NOTED

Note A:
The existing grade elevations at floorbeam 12,12 and at the east abutment shall be field verified. The proposed top of lower deck elevations shown on sheet 230/270 shall be adjusted as directed by the Engineer. Prior to fabricating and furnishing stirrup bar nos. ESLES403 and 13LES425 thru 13LES430 the Contractor shall field verify the top of floorbeam and abutment elevations after removal of the existing lower deck slab. The lengths of the stirrup bars shall be checked, and adjusted if required to match the lengths obtained by taking the differences between the proposed top of deck elevations and the existing top of floorbeam elevations. Payment for this work shall be included with Item 623.

NOTES:
FOR LOCATION OF SECTIONS G-G AND H-H, SEE SHEET 108/270

FOR DETAILS OF COMPRESSION SEAL, SEE SHEET 224/270

THE FOLLOWING ABBREVIATIONS ARE USED:

T = TOP

B = BOTTOM

——— INDICATES EXISTING STRUCTURE.

COUNTY BRIDGE NO. 84

HOWARD NEEDLES TAMMEN & BERGENDOFF
ARCHITECTS ENGINEERS PLANNERS
HNTB

LOWER DECK SECTIONS
SPAN 13
BR. NO. CUY – 6 – 1499
REHABILITATION OF
VETERANS MEMORIAL BRIDGE
(U.S. 6, 20, 42 & S.R. 3 OVER CUYAHOGA RIVER)
CLEVELAND CUYAHOGA COUNTY OHIO

DRAWN J.O.L.	TRACED J.L.V.	CHECKED W.J.V.	REVIEWED C.A.B.	REVISED
DATE 3/10/92	DATE 5/5/92	DATE 5/6/92	DATE 4/8/94	SHEET 109/270

FHWA REGION	STATE	PROJECT	
5	OHIO		

242/412

CUYAHOGA COUNTY
CUY – 6 – 14.99

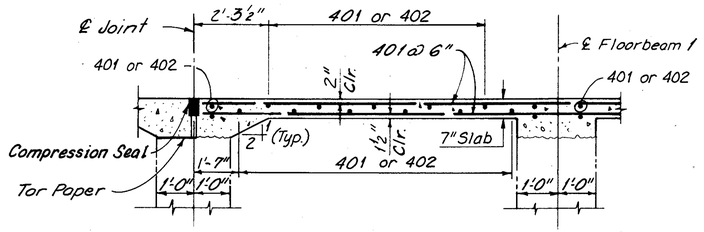

SECTION A–A

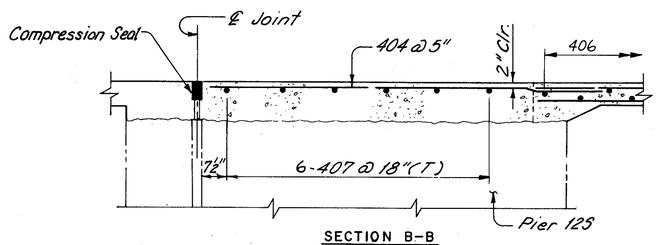

SECTION B–B

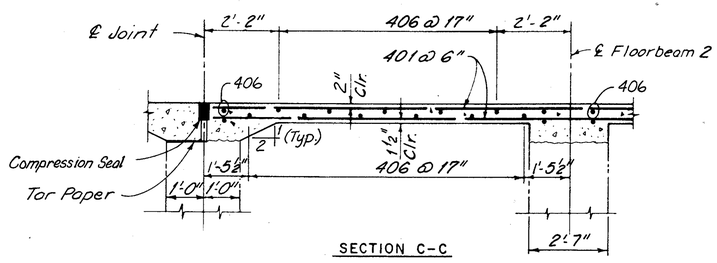

SECTION C–C

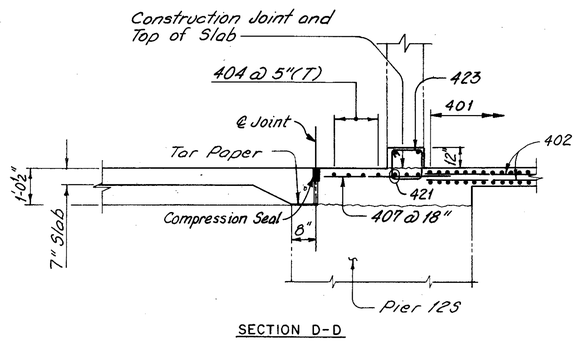

SECTION D–D

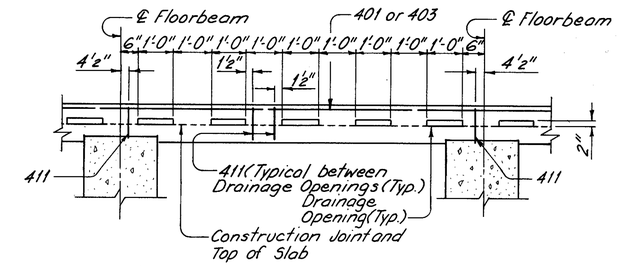

INTERIOR BAY

SECTION J – J
(Railing Not Shown)

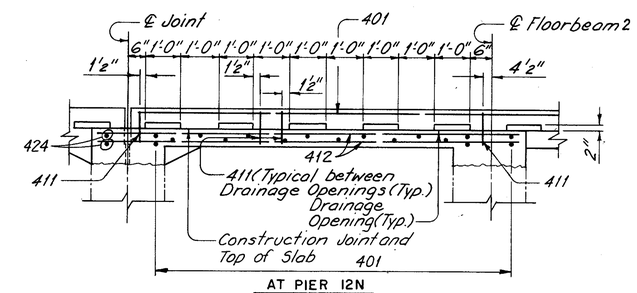

AT PIER 12N

SECTION I – I
(Railing Not Shown)

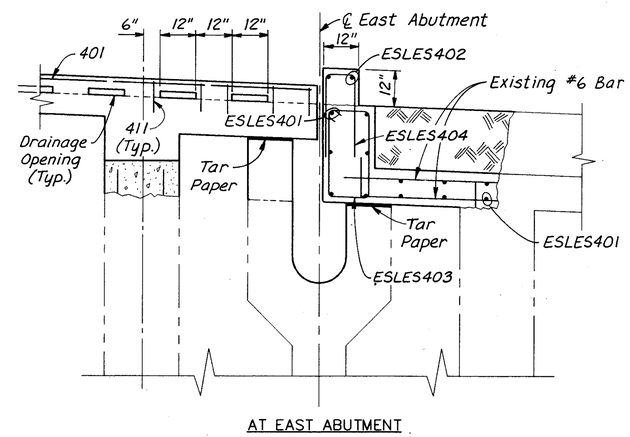

AT EAST ABUTMENT

SECTION E – E
(Railing Not Shown)

NOTE:
ALL REINFORCING BAR MARKS SHALL BE PREFIXED 13LES UNLESS OTHERWISE NOTED

NOTES:

FOR LOCATION OF SECTIONS, SEE SHEET 108/270

FOR DETAILS OF COMPRESSION SEAL, SEE SHEET 224/270

THE FOLLOWING ABBREVIATIONS ARE USED:

T = TOP

B = BOTTOM

——— INDICATES EXISTING STRUCTURE.

COUNTY BRIDGE NO. 84

HOWARD NEEDLES TAMMEN & BERGENDOFF
ARCHITECTS ENGINEERS PLANNERS
HNTB

LOWER DECK SECTIONS
SPAN 13
BR. NO. CUY – 6 – 1499
REHABILITATION OF
VETERANS MEMORIAL BRIDGE
(U.S. 6, 20, 42 & S.R. 3 OVER CUYAHOGA RIVER)

CLEVELAND CUYAHOGA COUNTY OHIO

DRAWN J.O.L.	TRACED J.L.V.	CHECKED W.J.V.	REVIEWED C.A.B.	REVISED
DATE 3/10/92	DATE 5/5/92	DATE 5/6/92	DATE 4/8/94	SHEET 110/270

FHWA REGION	STATE	PROJECT	
5	OHIO		

243 / 412

CUYAHOGA COUNTY CUY-6-14.99

NOTE: THE SOUTH INTERIOR RAILINGS 2, 2-3 AND 1A, 5-6 SHALL BE REMOVED BUT NOT REPLACED. THE COLUMN FACE EXPOSED SHALL BE PATCHED IN ACCORDANCE WITH ITEM SPECIAL - PATCHING CONCRETE STRUCTURES.

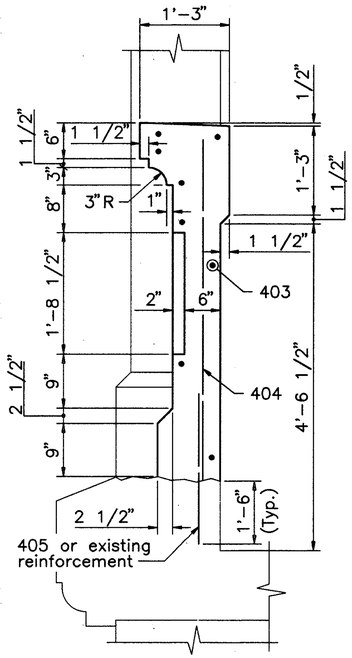

SECTION A-A

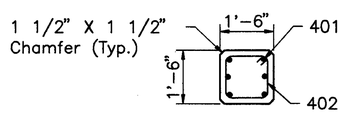

SECTION B-B

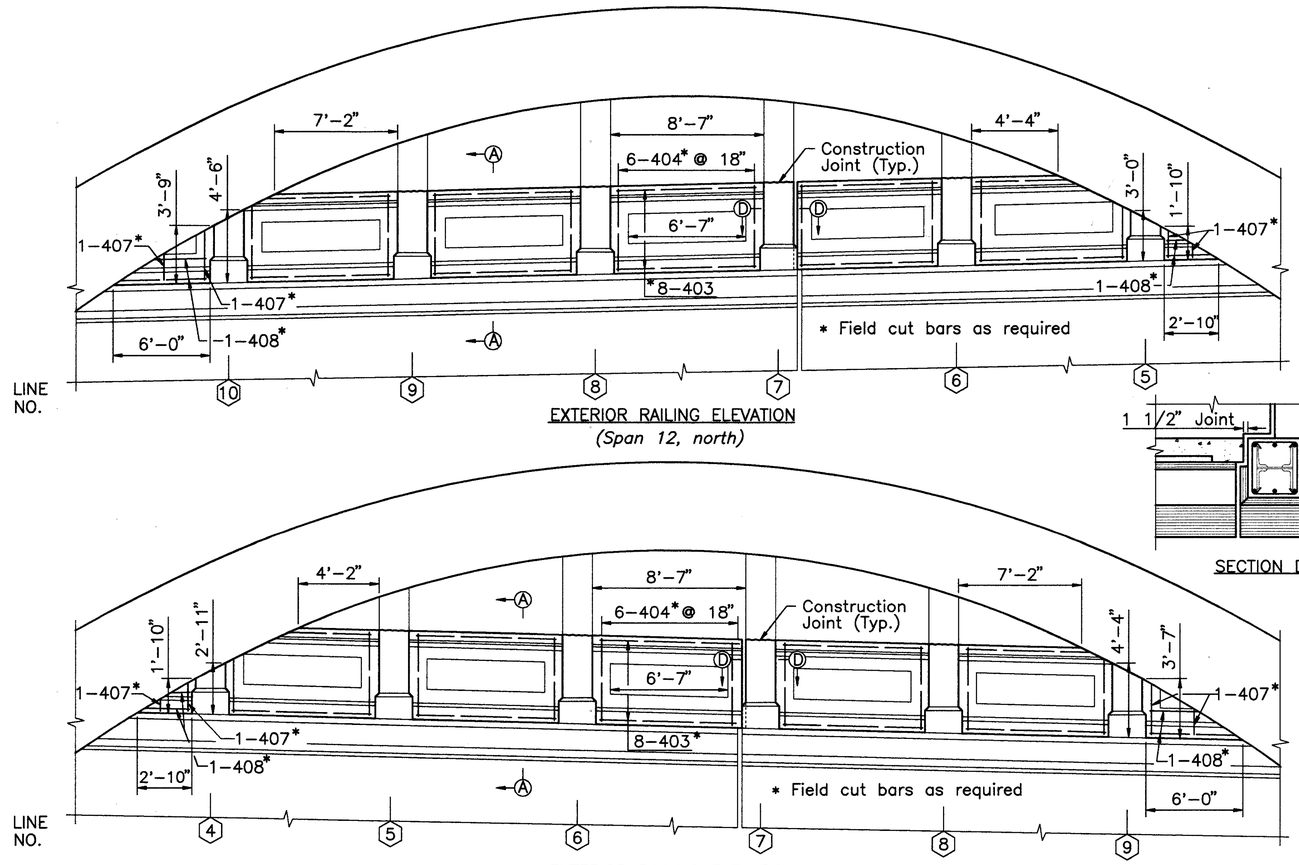

EXTERIOR RAILING ELEVATION
(Span 12, north)

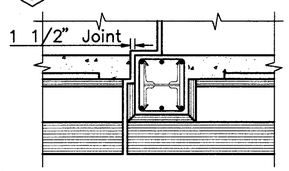

SECTION D-D

EXTERIOR RAILING ELEVATION
(Span 12, south)

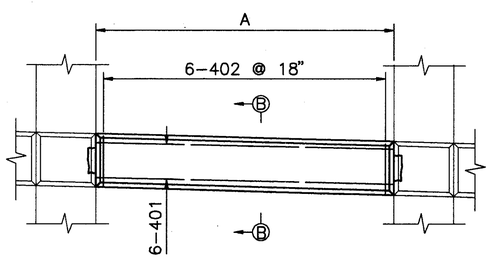

ELEVATION
INTERIOR RAILING
(Typ. except as noted)

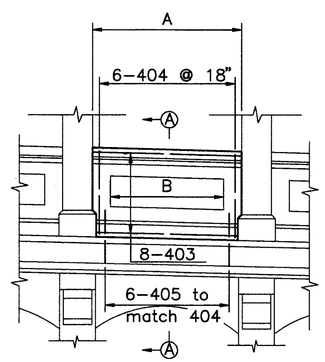

ELEVATION
EXTERIOR RAILING

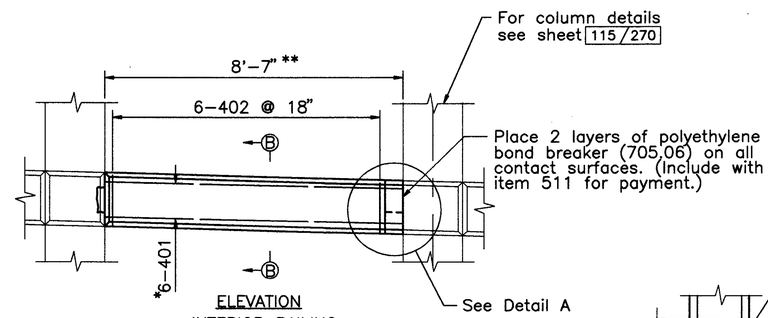

ELEVATION
INTERIOR RAILING
(Railing 11,8-12,1,N.I. shown, railings 12,1-2,N.I. and 11,8-12,1,S.I. similar)

* use 6-406 at 12,1-2;N.I. only
** distance is measured perpendicular to column line

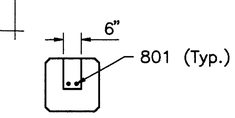

VIEW C-C

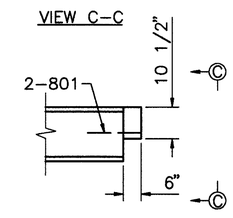

DETAIL A

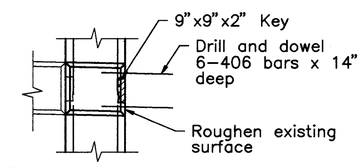

KEY AND DOWEL DETAIL
(Detail applies to columns 3,17,N.I. ; 3,17,S.I.; 5,2,N.I.; and 5,2,S.I. only)

DIMENSION A:

7'-1"	Span 1A, 1A-1, S.I.
8'-11 1/2"	Span 1A, 1-2, S.E.
8'-8 1/2"	Spans 2, 3, 5, 6, 7, and 8
8'-4"	Spans 1, 9, 10, and 11

DIMENSION B:

6'-11 1/2"	Span 1A
6'-8 1/2"	Spans 2, 3, 5, 6, 7, and 8
6'-4"	Spans 1, 9, 10, and 11

LOWER DECK RAILING REPLACEMENT DETAILS

TABLE OF LOWER DECK RAILING REPLACEMENTS

NORTH EXTERIOR
1,1-2; 1,9-10; 3,1-2; 3,5-6; 3,17-18; 5,1-2; 12,4-5; 12,5-6; 12,6-7; 12,7-8; 12,8-9; 12,9-10; 12,10-11; 12,12-13,1;

SOUTH EXTERIOR
1A,1-2; 1,1-2; 1,12-13; 2,1-2; 2,15-16; 3,1-2; 3,2-3; 3,5-6; 3,6-7; 3,7-8; 3,8-9; 3,17-18; 5,12-13; 8,1-2; 8,14-15; 9,5-6; 9,8-9; 9,9-10; 10,11-12; 12,3-4; 12,4-5; 12,5-6; 12,6-7; 12,7-8; 12,8-9; 12,9-10;

NORTH INTERIOR
1,1-2; 1,2-3; 1,10-11; 1,11-12; 1,12-13; 2,1-2; 2,2-3; 2,3-4; 2,4-5; 2,5-6; 2,8-9; 2,12-13; 2,14-15; 2,15-16; 3,1-2; 3,2-3; 3,3-4; 3,4-5; 3,5-6; 3,6-7; 3,7-8; 3,8-9; 3,17-18•; 5,1-2•; 5,2-3; 5,4-5; 5,5-6; 5,13-14; 5,14-15; 6,1-2; 6,5-6; 6,6-7; 6,8-9; 6,12-13; 6,13-14; 6,14-15; 7,1-2; 7,2-3; 7,3-4; 7,4-5; 7,6-7; 7,11-12; 7,12-13; 7,13-14; 7,14-15; 9,1-2; 9,9-10; 9,11-12; 9,12-13; 10,1-2; 10,2-3; 10,4-5; 10,5-6; 10,6-7; 10,8-9; 10,9-10; 10,10-11; 10,11-12; 11,1-2; 11,2-3; 11,3-4; 11,4-5; 11,5-6; 11,6-7; 11,7-8; 11,8-12,1; 12,1-2; 12,2-3; 12,3-4;

SOUTH INTERIOR
1A,1A-1; 1,1-2; 1,7-8; 1,8-9; 1,12-13; 2,1-2; 2,5-6; 2,6-7; 2,7-8; 2,12-13; 2,13-14; 2,15-16; 3,1-2; 3,3-4; 3,4-5; 3,5-6; 3,6-7; 3,8-9; 3,12-13; 3,17-18•; 5,1-2•; 5,2-3; 5,12-13; 5,13-14; 5,14-15; 6,1-2; 6,2-3; 6,12-13; 6,14-15; 7,1-2; 7,2-3; 7,4-5; 7,8-9; 7,10-11; 7,11-12; 7,12-13; 7,13-14; 7,14-15; 8,1-2; 8,14-15; 9,1-2; 9,2-3; 9,4-5; 9,11-12; 9,12-13; 10,1-2; 10,5-6; 10,7-8; 10,9-10; 10,10-11; 10,11-12; 11,1-2; 11,2-3; 11,4-5; 11,5-6; 11,7-8; 11,8-12,1; 12,1-2; 12,2-3;

• DENOTES NEW MEMBER

ALL REINFORCING BAR MARKS SHALL BE PREFIXED AS FOLLOWS:		
Span 1A	–	1ALER
Span 1	–	1LER
Span 2	–	2LER
Span 3	–	3LER
Span 5	–	5LER
Span 6	–	6LER
Span 7	–	7LER
Span 8	–	8LER
Span 9	–	9LER
Span 10	–	10LER
Span 11	–	11LER
Span 12	–	12LER

NOTES:

FOR REMOVAL DETAILS SEE SHEET 52/270.

LOWER PORTIONS OF EXTERIOR COLUMNS OF SPAN 12 SHALL BE PLACED MONOLITHIC WITH THE RAILINGS. FOR DETAILS OF COLUMNS SEE SHEET 115/270.

COUNTY BRIDGE NO. 84

HOWARD NEEDLES TAMMEN & BERGENDOFF
ARCHITECTS ENGINEERS PLANNERS
HNTB

LOWER DECK RAILING REPLACEMENT DETAILS
BR. NO. CUY – 6 – 1499
REHABILITATION OF
VETERANS MEMORIAL BRIDGE
(U.S. 6, 20, 42 & S.R. 3 OVER CUYAHOGA RIVER)
CLEVELAND CUYAHOGA COUNTY OHIO

DRAWN R.S.Y.	TRACED R.S.Y.	CHECKED B.E.B.	REVIEWED C.A.B.	REVISED
DATE 10/15/93	DATE 10/15/93	DATE 10/25/93	DATE 3/31/94	SHEET 111/270

\11646\REPRAIL.DWG

FHWA REGION	STATE	PROJECT	
5	OHIO		

244 / 412

CUYAHOGA COUNTY
CUY – 6 – 14.99

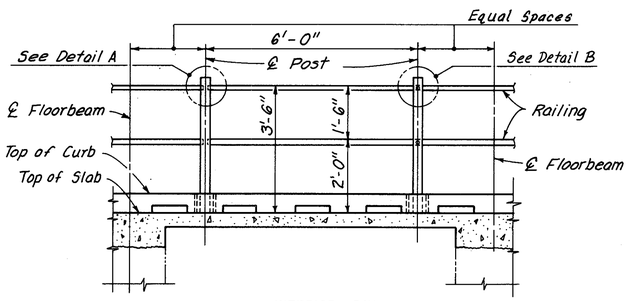

INTERIOR BAY

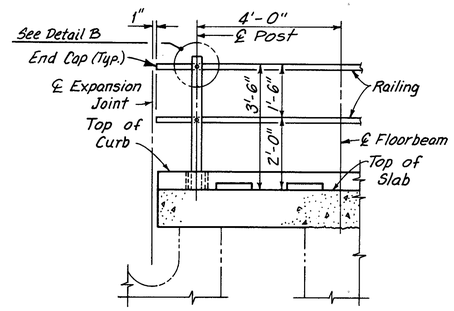

AT PIERS AND ABUTMENTS
(EXCEPT PIERS 3 AND 4)

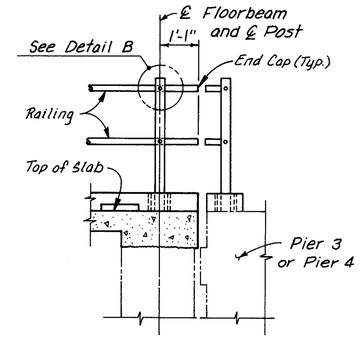

AT PIERS 3 AND 4

NORTH BAY
(Railing details)

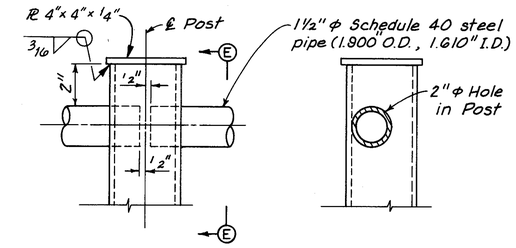

ELEVATION

SECTION E-E

DETAIL A

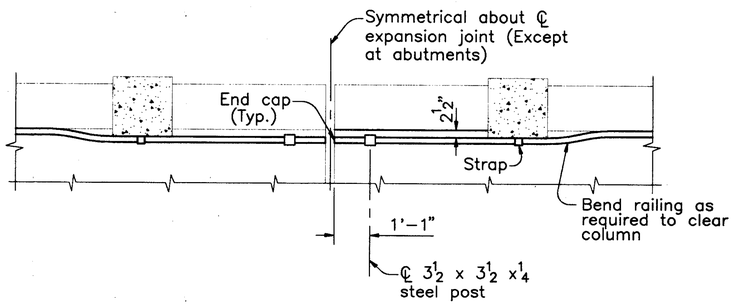

PLAN

CENTER BAY RAILING
AT PIERS AND ABUTMENTS
(Except piers 3 and 4)

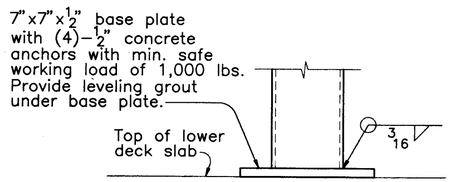

CENTER BAY
POST BASE PLATE DETAIL

CENTER BAY
(Railing details)

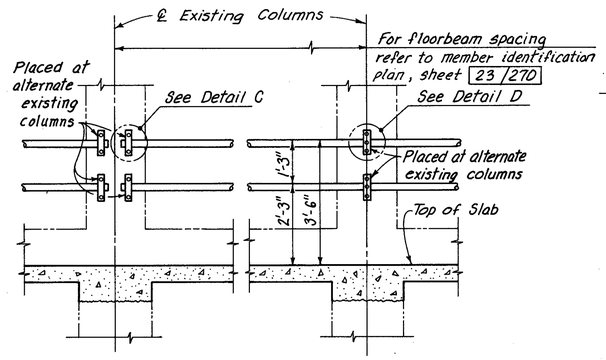

INTERIOR BAY

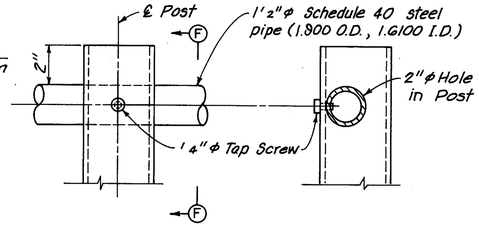

ELEVATION

SECTION F-F

DETAIL B

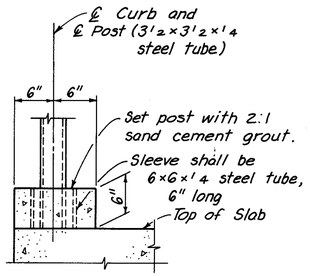

POST DETAIL

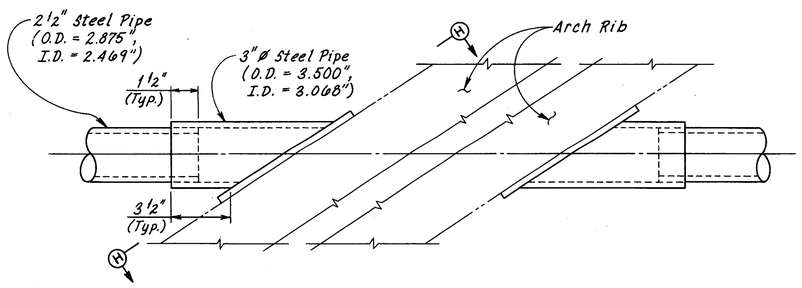

ELEVATION AT SPAN 12 ARCH RIBS

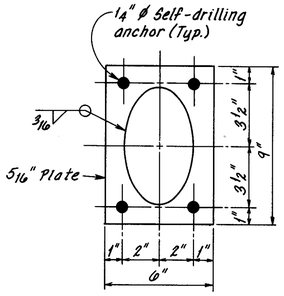

SECTION H-H

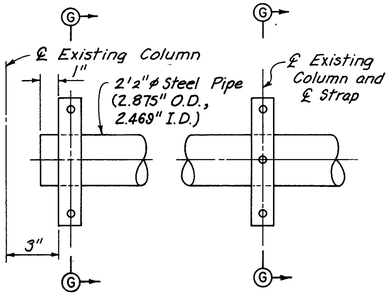

DETAIL C

DETAIL D

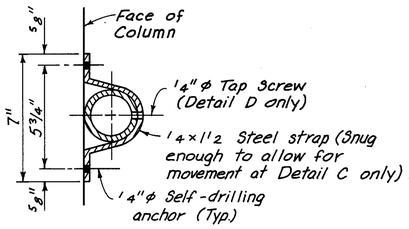

SECTION G-G

NOTE:
FOR END RAILING DETAILS AT PIERS 3 AND 4 AND ABUTMENTS SEE SHEET 113/270.

COUNTY BRIDGE NO. 84

HOWARD NEEDLES TAMMEN & BERGENDOFF
ARCHITECTS ENGINEERS PLANNERS
HNTB

LOWER DECK RAILING DETAILS
BR. NO. CUY – 6 – 1499
REHABILITATION OF
VETERANS MEMORIAL BRIDGE
(U.S. 6, 20, 42 & S.R. 3 OVER CUYAHOGA RIVER)
CLEVELAND CUYAHOGA COUNTY OHIO

DRAWN C.K.B.	TRACED G.C.A.	CHECKED C.E.P.	REVIEWED C.A.B.	REVISED
DATE 5/18/90	DATE 5/25/90	DATE 6/14/90	DATE 4/8/94	SHEET 112/270

FHWA REGION	STATE	PROJECT	
5	OHIO		

245/412

CUYAHOGA COUNTY
CUY – 6 – 14.99

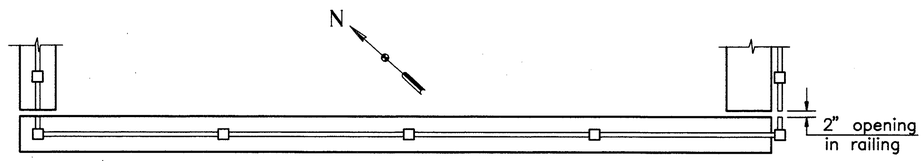

PLAN
(West abutment shown, east abutment opposite hand)

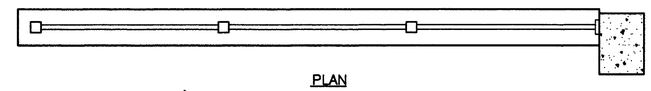

PLAN
(Typical at north and south sides of east face, pier 3 and west face, pier 4)

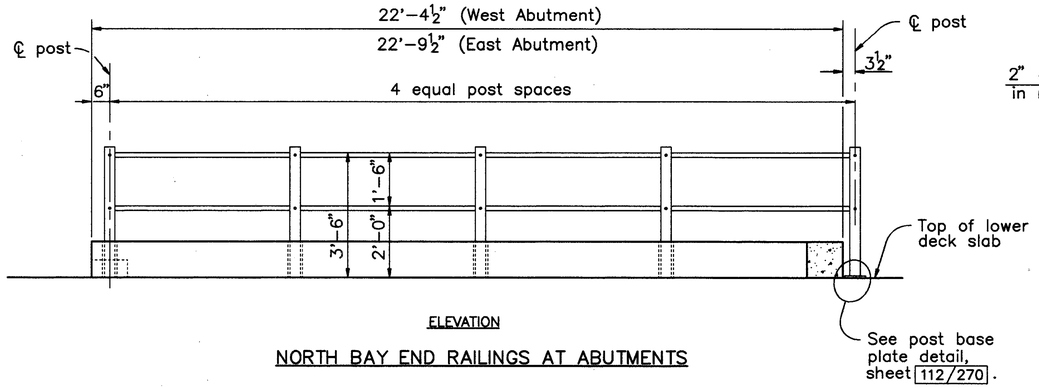

ELEVATION

NORTH BAY END RAILINGS AT ABUTMENTS

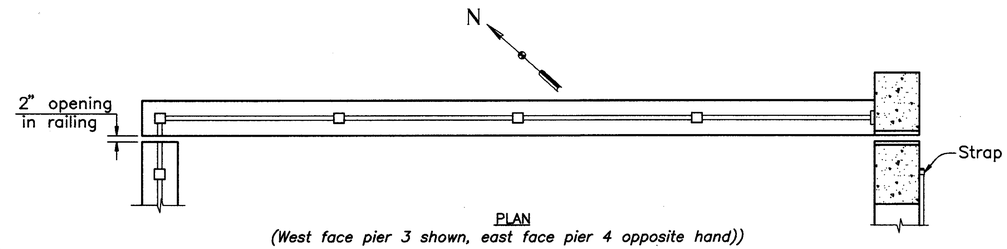

PLAN
(West face pier 3 shown, east face pier 4 opposite hand))

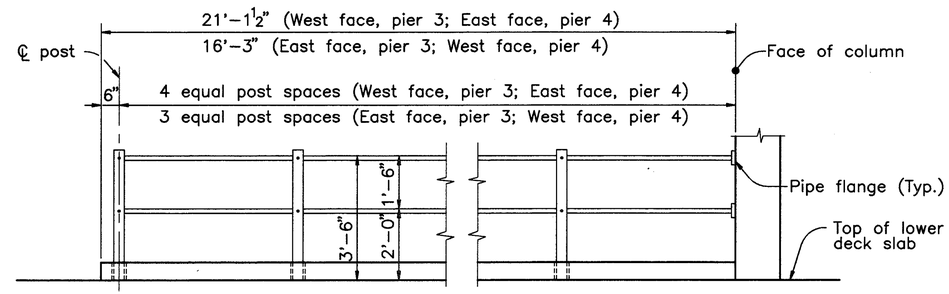

ELEVATION

END RAILINGS AT PIERS 3 AND 4

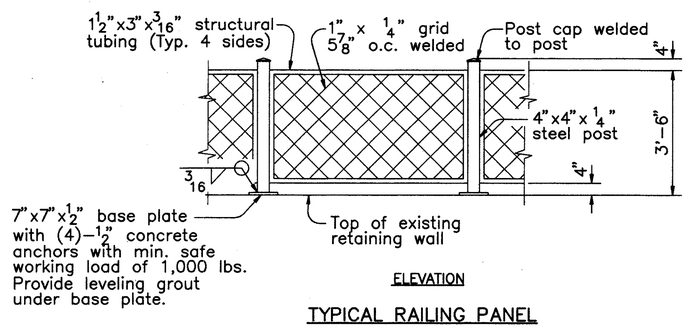

ELEVATION

TYPICAL RAILING PANEL

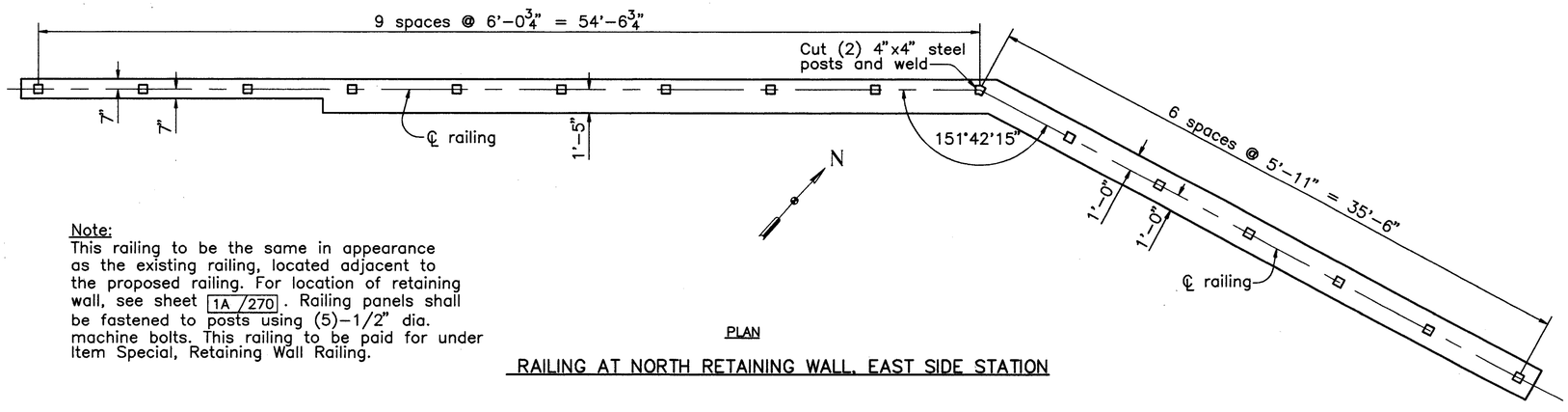

PLAN

RAILING AT NORTH RETAINING WALL, EAST SIDE STATION

Note:
This railing to be the same in appearance as the existing railing, located adjacent to the proposed railing. For location of retaining wall, see sheet 1A/270. Railing panels shall be fastened to posts using (5)–1/2" dia. machine bolts. This railing to be paid for under Item Special, Retaining Wall Railing.

NOTES:

FOR LOWER DECK DETAILS AT WEST ABUTMENT SEE SHEETS 95/270 AND 97/270.

FOR LOWER DECK DETAILS AT EAST ABUTMENT SEE SHEETS 108/270 AND 110/270.

FOR LOWER DECK DETAILS OF PIERS 3 AND 4 SEE SHEET 98/270.

FOR ADDITIONAL LOWER DECK RAILING DETAILS SEE SHEET 112/270.

COUNTY BRIDGE NO. 84

HOWARD NEEDLES TAMMEN & BERGENDOFF
ARCHITECTS ENGINEERS PLANNERS
HNTB

LOWER DECK RAILING
AND RETAINING WALL RAILING DETAILS
BR. NO. CUY – 6 – 1499
REHABILITATION OF
VETERANS MEMORIAL BRIDGE
(U.S. 6, 20, 42 & S.R. 3 OVER CUYAHOGA RIVER)

CLEVELAND CUYAHOGA COUNTY OHIO

DRAWN B.E.B.	TRACED B.E.B.	CHECKED W.D.D.	REVIEWED C.A.B.	REVISED
DATE 5/27/94	DATE 5/27/94	DATE 5/31/94	DATE 6/1/94	SHEET 113/270

\11646\LDRAIL.DWG

FHWA REGION	STATE	PROJECT	
5	OHIO		

246/412

CUYAHOGA COUNTY
CUY – 6 – 14.99

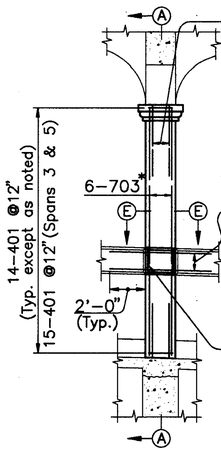

UPPER DECK INTERIOR COLUMN
(At interior floorbeam)

*Note: At replacement floorbeam locations use 3–702 and 3–703. Extend 702 into new floorbeam.

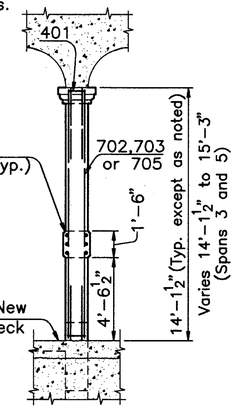

SECTION A–A

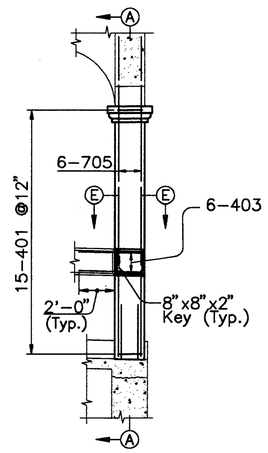

UPPER DECK INTERIOR COLUMN
(At floorbeams 3,18 and 5,1)

Note:
This detail applies at the following floorbeams:
1B,12; 1,1; 1,13; 2,1; 2,16; 3,1; 5,15; 6,1; 6,15; 7,1; 7,15; 8,1; 8,15; 9,1; 9,13; 10,1; 10,12 and 11,1.

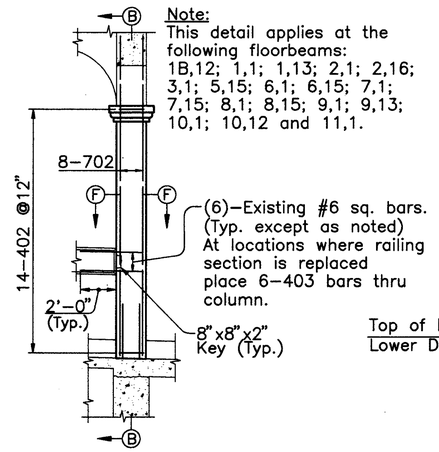

UPPER DECK INTERIOR COLUMN
(At end floorbeam except 3,18 and 5,1)

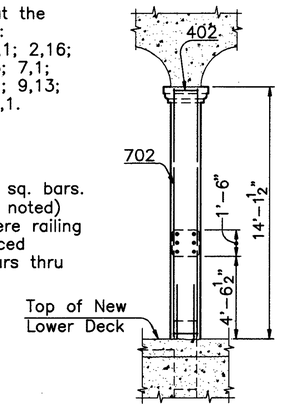

SECTION B–B

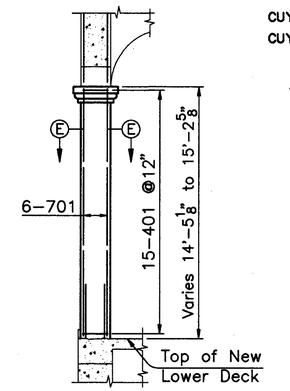

UPPER DECK INTERIOR COLUMN
(Piers 3 and 4)
(End floorbeam shown, center floorbeam similar)

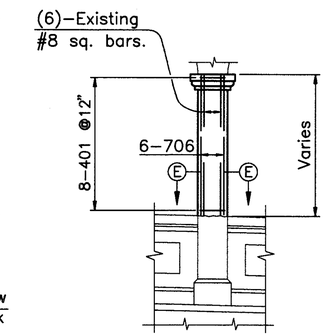

UPPER DECK EXTERIOR COLUMN
(Columns 3,6,N.E.,3,8,N.E.,7,13,S.E., 9,10,S.E. and 9,12,N.E.)

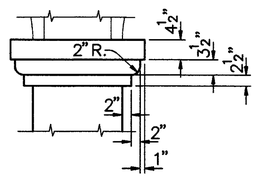

COLUMN CAPITAL DETAIL
(Dimensions are typical on four faces of column unless shown otherwise)

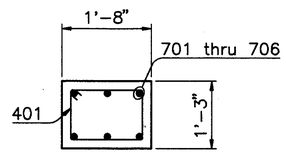

SECTION E–E

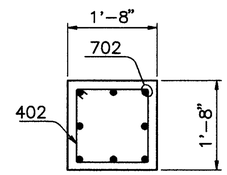

SECTION F–F

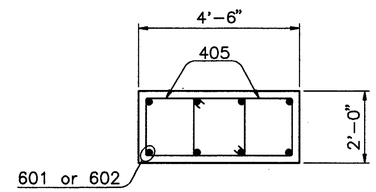

SECTION D–D

ALL REINFORCING BAR MARKS SHALL BE PREFIXED AS FOLLOWS:		
Span 1A	–	1AEC
Span 1B	–	1BEC
Span 1	–	1EC
Span 2	–	2EC
Span 3	–	3EC
Pier 3	–	3PEC
Pier 4	–	4PEC
Span 5	–	5EC
Span 6	–	6EC
Span 7	–	7EC
Span 8	–	8EC
Span 9	–	9EC
Span 10	–	10EC
Span 11	–	11EC

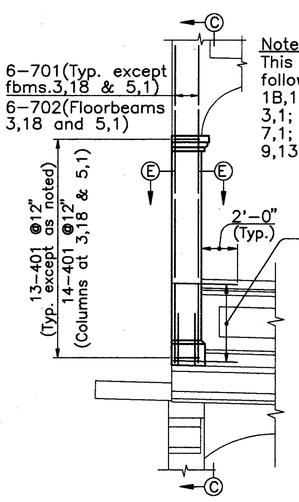

Note:
This detail applies at the following floorbeams:
1B,12; 1,1; 1,13; 2,1; 2,16; 3,1; 3,18; 5,1; 5,15; 6,1; 6,15; 7,1; 7,15; 8,1; 8,15; 9,1; 9,13; 10,1; 10,12 and 11,1.

UPPER DECK EXTERIOR COLUMN
(At end floorbeam)
(Upper pier shaft not shown)
(Columns 1B,12,N.E. and 1B,12,S.E. similar)

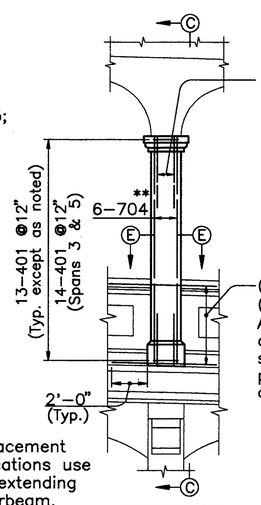

**Note: At replacement floorbeam locations use 6–701 bars extending into new floorbeam.

UPPER DECK EXTERIOR COLUMN
(At interior floorbeam)
(Columns 1A,2,N.E.; 1A,3,S.E.; 1A,6,N.E. and 1B,4,S.E. similar)

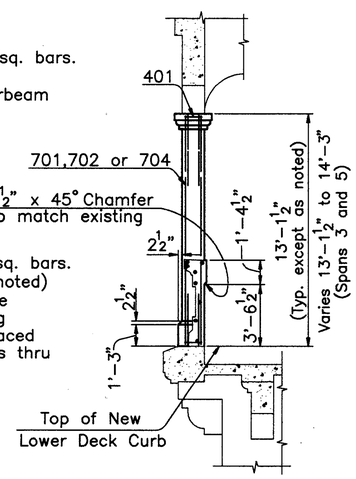

SECTION C–C

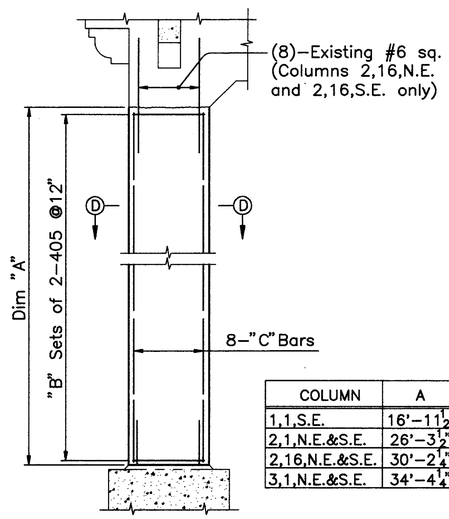

LOWER DECK EXTERIOR COLUMN

COLUMN	A	B	C
1,1,S.E.	16'–11½"	17	601
2,1,N.E.&S.E.	26'–3½"	27	601
2,16,N.E.&S.E.	30'–2¼"	30	602
3,1,N.E.&S.E.	34'–4¼"	35	601

NOTES:

AT LOCATIONS WHERE COLUMN IS REPLACED AND EXISTING FLOORBEAM(S) REMAIN, THE CONSTRUCTION JOINT BETWEEN THE NEW COLUMN AND THE EXISTING FLOORBEAM(S) SHALL BE EPOXY INJECTED, AFTER CURING OF COLUMN AND PRIOR TO REMOVAL OF TEMPORARY SHORING.

FOR REMOVAL DETAILS SEE SHEET 52/270.

FOR COLUMN DETAILS OF SPANS 12, 13 AND EAST STATION SEE SHEET 115/270.

FOR COLUMN DETAILS OF WEST SIDE STATION AND TUNNELS SEE SHEETS 64/270 THRU 66/270.

FOR COLUMN DETAILS OF TOWER A AND TOWER B SEE SHEETS 73/270 THRU 75/270.

FOR LOWER DECK RAILING REPLACEMENT DETAILS SEE SHEET 111/270.

COUNTY BRIDGE NO. 84

HOWARD NEEDLES TAMMEN & BERGENDOFF
ARCHITECTS ENGINEERS PLANNERS
HNTB

COLUMN REPLACEMENT DETAILS
SPANS 1A–3 AND 5–11
BR. NO. CUY – 6 – 1499
REHABILITATION OF
VETERANS MEMORIAL BRIDGE
(U.S. 6, 20, 42 & S.R. 3 OVER CUYAHOGA RIVER)

CLEVELAND CUYAHOGA COUNTY OHIO

DRAWN B.E.B.	TRACED B.E.B.	CHECKED W.D.D.	REVIEWED C.A.B.	REVISED
DATE 9/21/93	DATE 9/21/93	DATE 3/30/94	DATE 4/8/94	SHEET 114/270

\11646\REPCOL

FHWA REGION	STATE	PROJECT	
5	OHIO		

247/412

CUYAHOGA COUNTY
CUY – 6 – 14.99

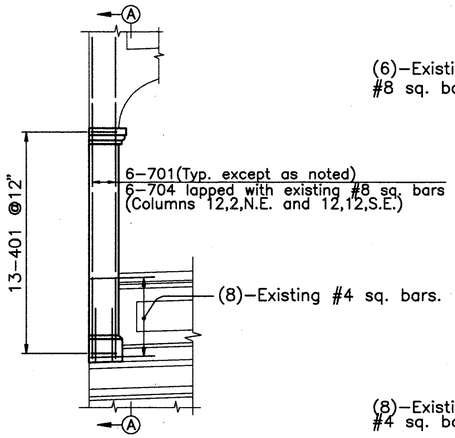

UPPER DECK EXTERIOR COLUMNS
12.1(N.E. AND S.E.),12.2,N.E.
12.12,S.E. AND 13.1,N.E.
(Column 13,1,N.E. shown, others similar)

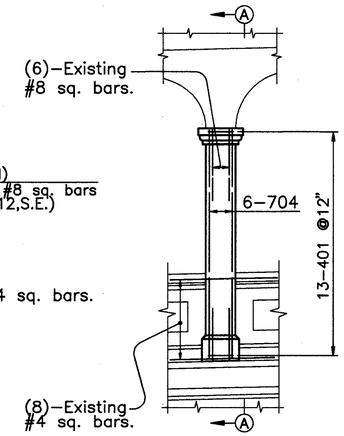

UPPER DECK
COLUMN 12.12,N.E.

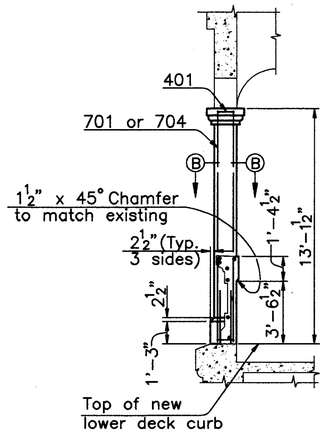

SECTION A–A

COLUMN	E
13,1,S.E.	13'–1½"
13,2,N.E.	13'–2½"
13,8,N.E.	13'–7⅞"
13,8,S.E.	13'–3⅛"
E.S.,1,N.E.	13'–8¾"
E.S.,1,S.E.	13'–3⅜"

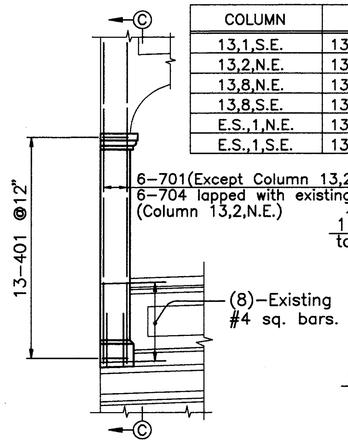

UPPER DECK EXTERIOR COLUMNS
13.1,S.E.,13.2,N.E. AND EAST ABUTMENT
(Column 13,8,N.E. shown, others similar)
(Existing concrete block walls at East Station not shown)

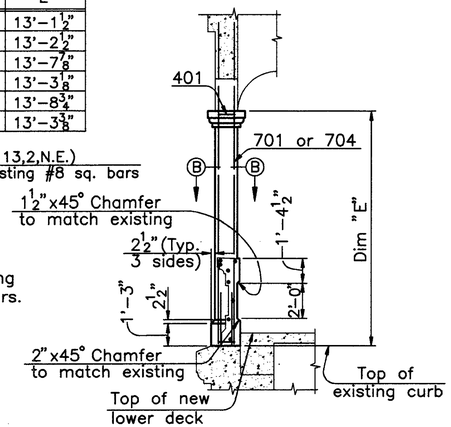

SECTION C–C

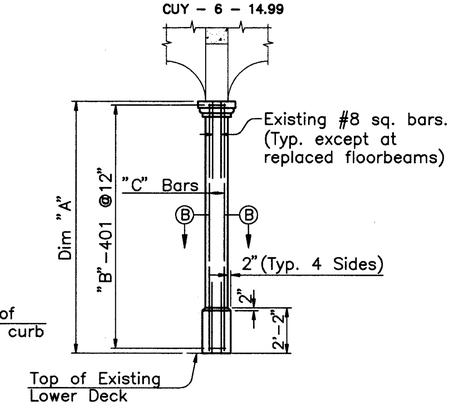

UPPER DECK COLUMNS
EAST SIDE STATION
(Looking East)
(Column E.S.,15,N.I. shown, others similar)

COLUMN	A	B	C
E.S.,15,N.I.	14'–2"	14	8–703
E.S.,16,S.E.	13'–9⅛"	14	8–704
E.S.,17,N.I.	14'–8⅜"	15	3–705 and 3–706
E.S.,18,N.I.	14'–8¾"	15	6–705
E.S.,21,N.I.	14'–11"	15	6–705

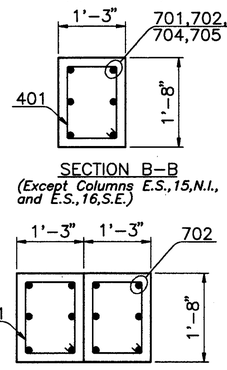

SECTION B–B
(Except Columns E.S.,15,N.I., and E.S.,16,S.E.)

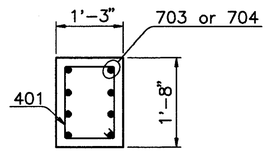

SECTION B–B
(Columns E.S.,15,N.I. and E.S.,16,S.E.)

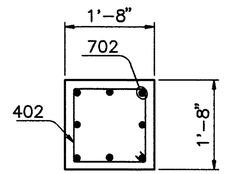

SECTION F–F

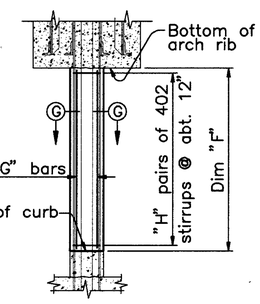

INTERIOR

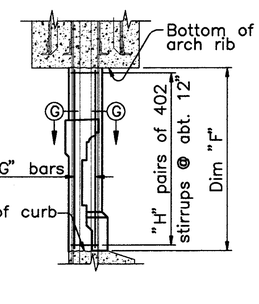

EXTERIOR

SPAN 12 CONCRETE ENCASED STEEL COLUMN REPAIR DETAIL

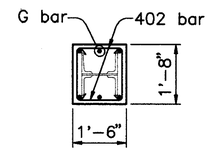

SECTION G–G

COLUMN	F	G	H
12,5,N.E.; 12,5,N.I 12,4,S.E.; 12,4,S.I.	2'–5"	403	3
12,6,N.E.; 12,6,N.I 12,5,S.E.; 12,5,S.I.	7'–3"	404	8
12,7,N.E.; 12,7,N.I 12,6,S.E.; 12,6,S.I.	9'–7"	405	10
12,8,N.E.; 12,8,N.I 12,7,S.E.; 12,7,S.I.	10–1"	406	10
12,9,N.E.; 12,9,N.I 12,8,S.E.; 12,8,S.I.	8'–1"	407	8
12,10,N.E.;12,10,N.I 12,9,S.E.; 12,9,S.I.	4'–0"	408	4

ALL REINFORCING BAR MARKS SHALL BE PREFIXED AS FOLLOWS:		
Span 12	–	12EC
Span 13	–	13EC
East Station	–	ESEC

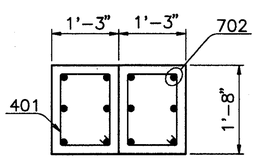

SECTION D–D

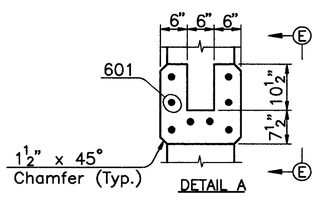

DETAIL A

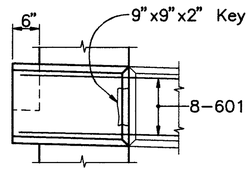

VIEW E–E

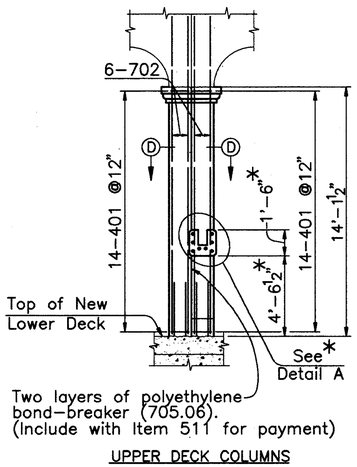

UPPER DECK COLUMNS
12.1,N.I. AND 13.1,N.I.
(Looking East)

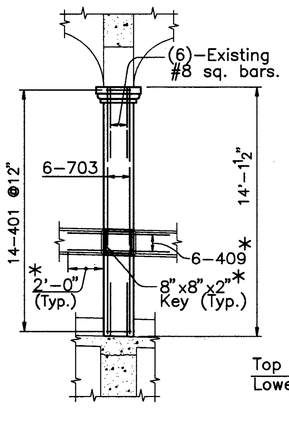

UPPER DECK COLUMNS
12.3,N.I. AND 12.12,S.I.
(Column section similar as shown in Section B–B)
(Looking North)

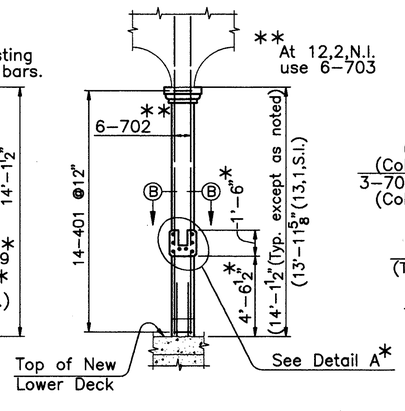

UPPER DECK COLUMNS
12.2,N.I.; 12.1,S.I. AND 13.1,S.I.
(Looking East)

* Note: Railing detail applies to columns 12,1,N.I.; 12,1,S.I.; 12,2,N.I. and 12,3,N.I. only.

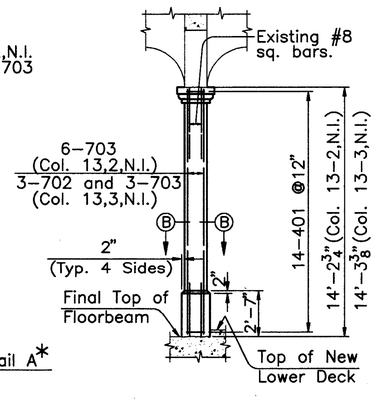

UPPER DECK COLUMN
13.2,N.I. AND 13.3,N.I.
(Looking East)

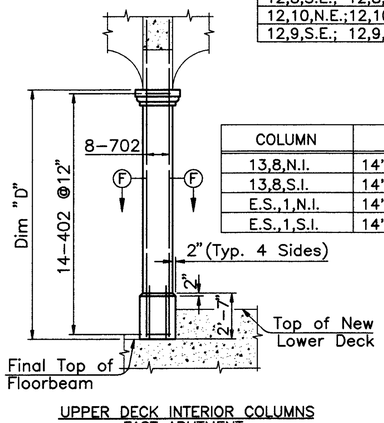

UPPER DECK INTERIOR COLUMNS
EAST ABUTMENT
(Columns at floorbeam 13,8 shown, columns at floorbeam E.S.,1 similar)

COLUMN	D
13,8,N.I.	14'–6⅞"
13,8,S.I.	14'–5¼"
E.S.,1,N.I.	14'–7⅝"
E.S.,1,S.I.	14'–5¾"

NOTES:

AT LOCATIONS WHERE COLUMN IS REPLACED AND EXISTING FLOORBEAM(S) REMAIN, THE CONSTRUCTION JOINT BETWEEN THE NEW COLUMN AND THE EXISTING FLOORBEAM(S) SHALL BE EPOXY INJECTED, AFTER CURING OF COLUMN AND PRIOR TO REMOVAL OF TEMPORARY SHORING.

FOR REMOVAL DETAILS SEE SHEET 52/270.

FOR COLUMN CAPITAL DETAILS SEE SHEET 114/270.

COUNTY BRIDGE NO. 84

HOWARD NEEDLES TAMMEN & BERGENDOFF
ARCHITECTS ENGINEERS PLANNERS
HNTB

COLUMN REPLACEMENT DETAILS
SPANS 12,13 AND EAST STATION
BR. NO. CUY – 6 – 1499
REHABILITATION OF
VETERANS MEMORIAL BRIDGE
(U.S. 6, 20, 42 & S.R. 3 OVER CUYAHOGA RIVER)
CLEVELAND CUYAHOGA COUNTY OHIO

DRAWN B.E.B.	TRACED B.E.B.	CHECKED W.D.D.	REVIEWED C.A.B.	REVISED
DATE 9/21/93	DATE 9/21/93	DATE 3/30/94	DATE 4/6/94	SHEET 115/270

\11646\REPCOL1

FHWA REGION	STATE	PROJECT	
5	OHIO		

248 / 412

CUYAHOGA COUNTY
CUY – 6 – 14.99

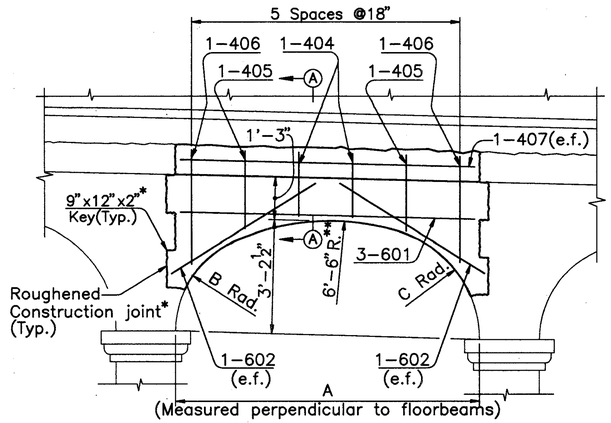

UPPER DECK EXTERIOR JACK ARCH

**5'–10" Radius, Spans 1A and 1B Only

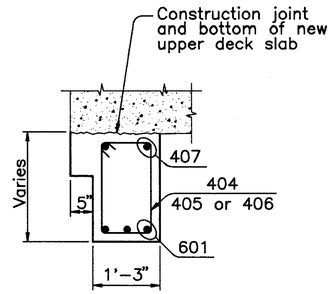

SECTION A–A

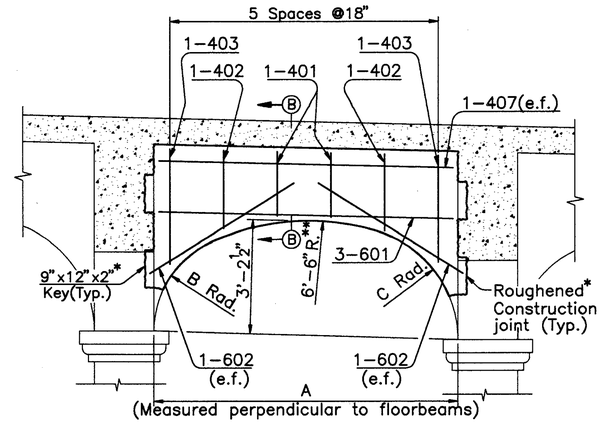

UPPER DECK INTERIOR JACK ARCH

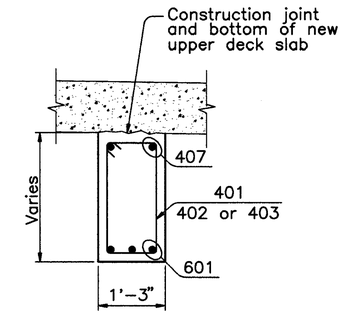

SECTION B–B

TABLE OF UPPER DECK JACK ARCH DIMENSIONS			
Span	A	B	C
1A	8'–4"	2'–8¼"	3'–2"
1B	8'–4"	2'–8¾"	3'–1½"
1	8'–4"	2'–10"	3'–2¼"
2	8'–8½"	2'–8⅜"	3'–1¼"
3	8'–8½"	2'–8⅜"	3'–1¼"
5	8'–8½"	2'–7¾"	3'–1⅞"
6	8'–8½"	2'–7¾"	3'–1⅞"
7	8'–8½"	2'–7¾"	3'–1⅞"
8	8'–8½"	2'–7¾"	3'–1⅞"
9	8'–4"	2'–9⅜"	3'–2¾"
10	8'–4"	2'–9⅜"	3'–2¾"
11	8'–4"	2'–9⅜"	3'–2¾"
12	8'–7"	2'–8⅜"	3'–2⅛"
13,N.E.	8'–4"	2'–9½"	3'–2¾"
13,N.I.	8'–4"	2'–9⅜"	3'–2⅞"
13,S.I.	8'–4"	2'–9⅛"	3'–3"
13,S.E.	8'–4"	2'–9"	3'–3⅛"

*Note:
Construction joint and keys apply only at floorbeams which are to remain.
At locations where floorbeam and jack arch are replaced, construction joint and keys shall not be constructed and the concrete shall be placed monolithically.

UPPER DECK JACK ARCH REPLACEMENT DETAILS
(Spans 1A thru 3 and 5 thru 13)

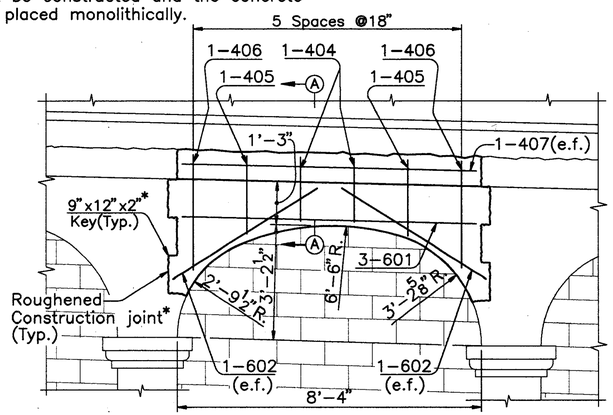

E.S.,1–2,N.E. THRU E.S.,7–8,N.E.
AND E.S.,1–2,S.E. THRU E.S.,6–7,S.E.

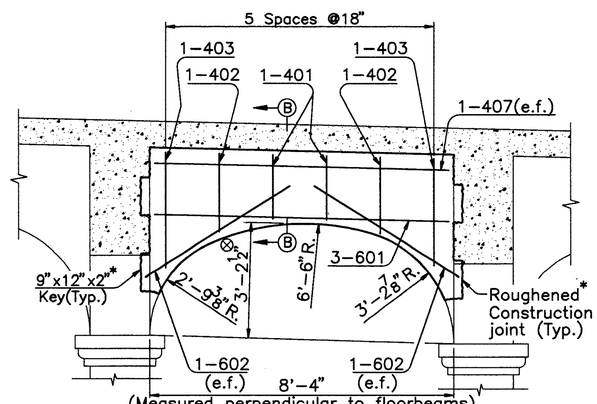

⊗2'–9" at E.S.,17–18,S.I.

E.S.,1–2,N.I. THRU E.S.,16–17,N.I.,
E.S.,1–2,S.I. THRU E.S.,20–21,S.I.
AND E.S.,7–8,S.E. THRU E.S.,19–20,S.E.

UPPER DECK JACK ARCH REPLACEMENT DETAILS
(East Station)

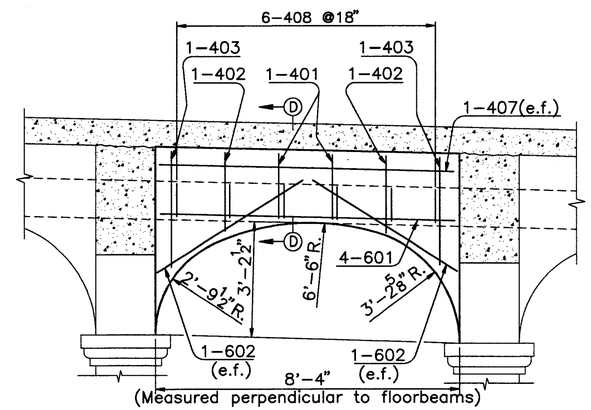

E.S.,17–18,N.I. THRU E.S.,20–21,N.I.

Note:
Concrete in these jack arches shall be placed monolithic with the new floorbeams.

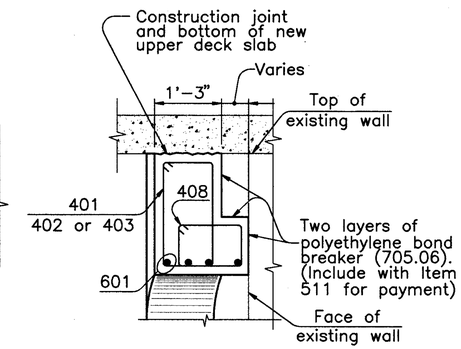

SECTION D–D

NOTES:
EXISTING REINFORCEMENT IS NOT SHOWN, REFER TO REMOVAL DETAILS OR FLOORBEAM REPLACEMENT DETAILS FOR LOCATIONS OF EXISTING REINFORCEMENT.

FOR REMOVAL DETAILS SEE SHEET 51/270.

FOR FLOORBEAM REPLACEMENT DETAILS SEE SHEETS 117/270 THRU 122/270.

THE FOLLOWING ABBREVIATION IS USED:
(e.f.) – EACH FACE

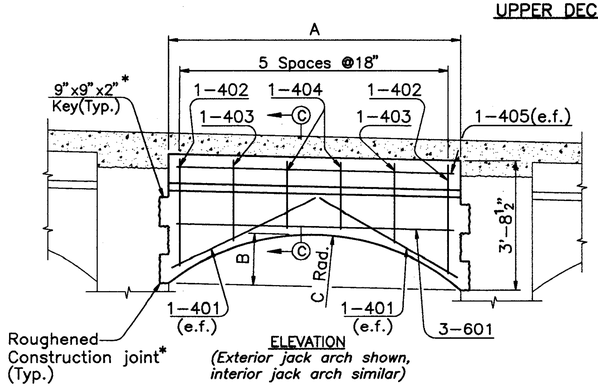

ELEVATION
(Exterior jack arch shown, interior jack arch similar)

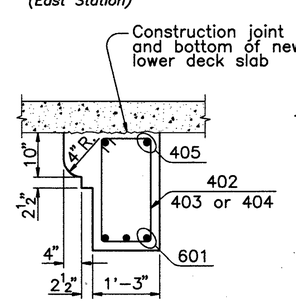

SECTION C–C
(Exterior jack arch)

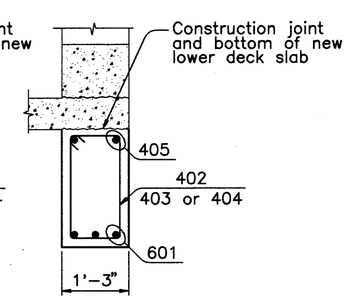

SECTION C–C
(Interior jack arch)

LOWER DECK JACK ARCH REPLACEMENT DETAILS
(Spans 1 thru 3 and 5 thru 11)

TABLE OF LOWER DECK JACK ARCH DIMENSIONS			
Span	A	B	C
1	8'–0"	1'–5¼"	6'–3⅜"
2	8'–4½"	1'–5¼"	6'–9¾"
3	8'–4½"	1'–5¼"	6'–10"
5	8'–4½"	1'–5¼"	6'–10"
6	8'–4½"	1'–5¼"	6'–10"
7	8'–4½"	1'–5¼"	6'–10"
8	8'–4½"	1'–5¼"	6'–10"
9	8'–0"	1'–5⅜"	6'–3"
10	8'–0"	1'–5⅜"	6'–3"
11	8'–0"	1'–5⅜"	6'–3"

ALL REINFORCING BAR MARKS SHALL BE PREFIXED AS FOLLOWS:		
SPAN	LOWER DECK JACK ARCH	UPPER DECK JACK ARCH
1A	—	1AUEJ
1B	—	1BUEJ
1	1LEJ	1UEJ
2	2LEJ	2UEJ
3	3LEJ	3UEJ
5	5LEJ	5UEJ
6	6LEJ	6UEJ
7	7LEJ	7UEJ
8	8LEJ	8UEJ
9	9LEJ	9UEJ
10	10LEJ	10UEJ
11	11LEJ	11UEJ
12	—	12UEJ
13	—	13UEJ
East Sta.	—	ESUEJ

COUNTY BRIDGE NO. 84

HOWARD NEEDLES TAMMEN & BERGENDOFF
ARCHITECTS ENGINEERS PLANNERS
HNTB

JACK ARCH REPLACEMENT DETAILS
SPANS 1A–3 AND 5–EAST STATION
BR. NO. CUY – 6 – 1499
REHABILITATION OF
VETERANS MEMORIAL BRIDGE
(U.S. 6, 20, 42 & S.R. 3 OVER CUYAHOGA RIVER)
CLEVELAND CUYAHOGA COUNTY OHIO

DRAWN B.E.B.	TRACED B.E.B.	CHECKED W.D.D.	REVIEWED C.A.B.	REVISED
DATE 9/21/93	DATE 9/21/93	DATE 3/30/94	DATE 3/31/94	SHEET 116/270

\11646\REPJA

FHWA REGION	STATE	PROJECT	
5	OHIO		

249/412

CUYAHOGA COUNTY
CUY – 6 – 14.99

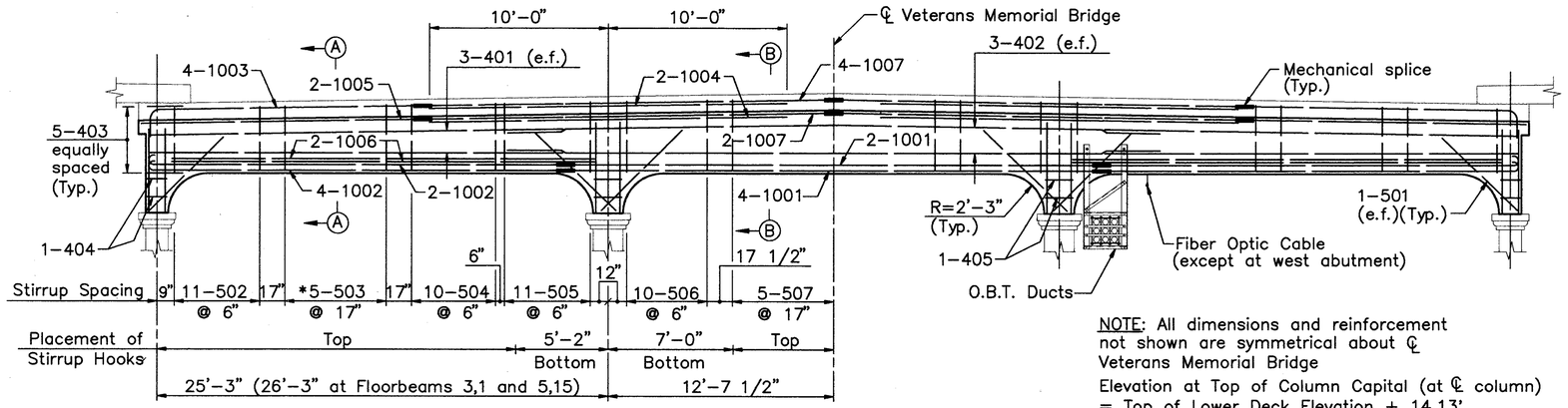

* (6–503 @ 16" for Floorbeams 3,1 and 5,15)

NOTE: All dimensions and reinforcement not shown are symmetrical about ℄ Veterans Memorial Bridge

Elevation at Top of Column Capital (at ℄ column) = Top of Lower Deck Elevation + 14.13'

END FLOORBEAM ELEVATION

(Looking east)
(Floorbeam 1B,12 shown, floorbeams 1,1; 1,13; 2,1; 2,16; 3,1; 5,15; 6,1; 6,15; 7,1; 7,15; 8,1; 8,15; 9,1; 9,13; 10,1; 10,12; and 11,1 similar)

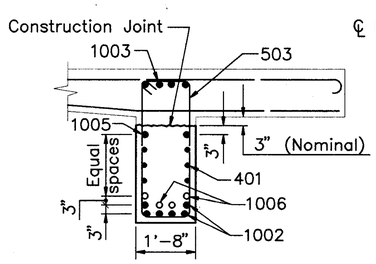

SECTION A–A
(Transverse Slab Bars Not Shown)

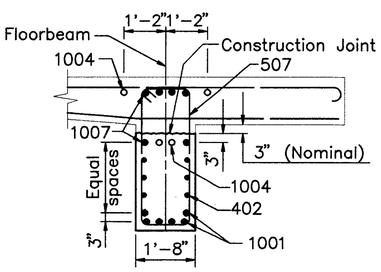

SECTION B–B
(Transverse Slab Bars Not Shown)

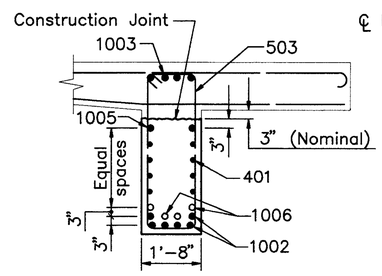

SECTION C–C
(Transverse Slab Bars Not Shown)

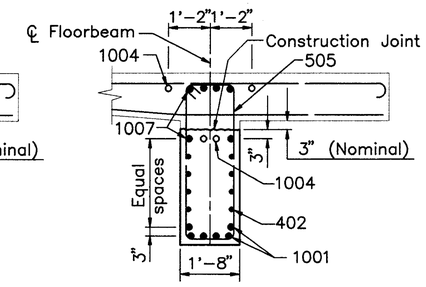

SECTION D–D
(Transverse Slab Bars Not Shown)

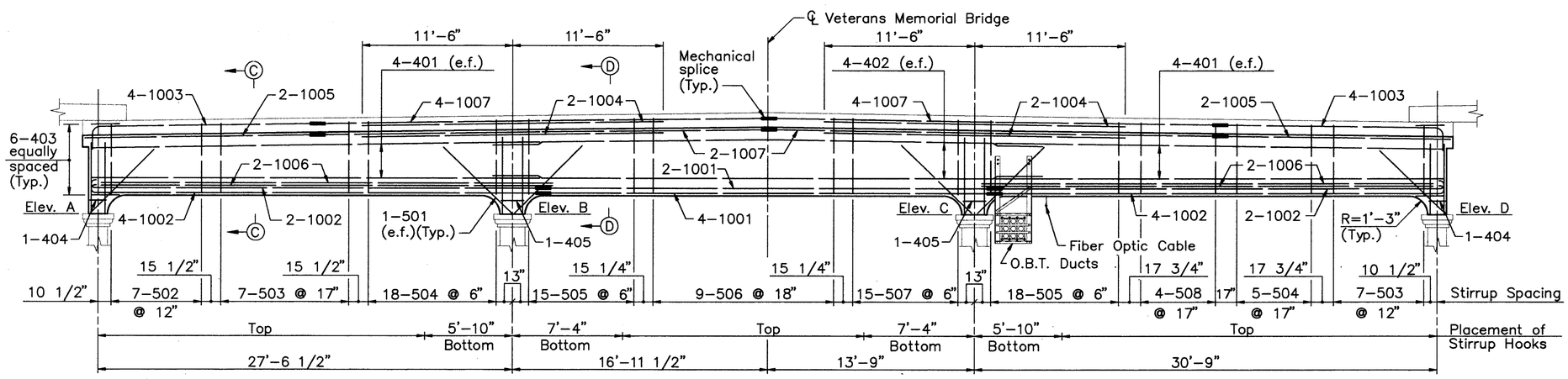

TABLE OF ELEVATIONS				
FLOORBEAM	ELEV. A	ELEV. B	ELEV. C	ELEV. D
13,8	647.09	646.97	646.83	646.70
E.S.,1	646.78	646.64	646.49	646.33

END FLOORBEAM AT EAST ABUTMENT

(Looking east)
(Floorbeam 13,8 shown, floorbeam E.S.,1 similar)

ALL REINFORCING BAR MARKS SHALL BE PREFIXED AS FOLLOWS:		
Span 1B	–	1BUEB
Span 1	–	1UEB
Span 2	–	2UEB
Span 3	–	3UEB
Span 5	–	5UEB
Span 6	–	6UEB
Span 7	–	7UEB
Span 8	–	8UEB
Span 9	–	9UEB
Span 10	–	10UEB
Span 11	–	11UEB
Span 13	–	13UEB
East Side Station	–	ESUEB

MINIMUM SPLICE LENGTH	
BAR	LENGTH
# 4	2'–3"

FOR DETAIL AT REPLACEMENT JACK ARCH LOCATIONS, SEE SHEET 118/270.

FOR REMOVAL DETAILS, SEE SHEET 50/270.

FOR UTILITY SUPPORT DETAILS, SEE SHEETS 232/270 AND 233/270.

FOR REPLACEMENT DETAILS OF FLOORBEAMS 3,18; 5,1; AND AT PIERS 3 AND 4, SEE SHEET 119/270.

● DESIGNATES FULL LENGTH BAR

○ DESIGNATES PARTIAL LENGTH BAR

e.f. DENOTES EACH FACE

ALL ELEVATIONS ARE GIVEN AT TOP OF COLUMN CAPITAL AT ℄ FLOORBEAM.

COUNTY BRIDGE NO. 84

HOWARD NEEDLES TAMMEN & BERGENDOFF
ARCHITECTS ENGINEERS PLANNERS
HNTB

REPLACEMENT UPPER DECK FLOORBEAMS
PIERS AND ABUTMENTS
BR. NO. CUY – 6 – 1499
REHABILITATION OF
VETERANS MEMORIAL BRIDGE
(U.S. 6, 20, 42 & S.R. 3 OVER CUYAHOGA RIVER)
CLEVELAND CUYAHOGA COUNTY OHIO

DRAWN R.S.Y.	TRACED R.S.Y.	CHECKED A.D.Y.	REVIEWED C.A.B.	REVISED
DATE 6/17/93	DATE 6/17/93	DATE 3/3/94	DATE 3/31/94	SHEET 117/270

\\11646\CONCRETE\UDFB2

FHWA REGION	STATE	PROJECT	
5	OHIO		

250 / 412

CUYAHOGA COUNTY
CUY – 6 – 14.99

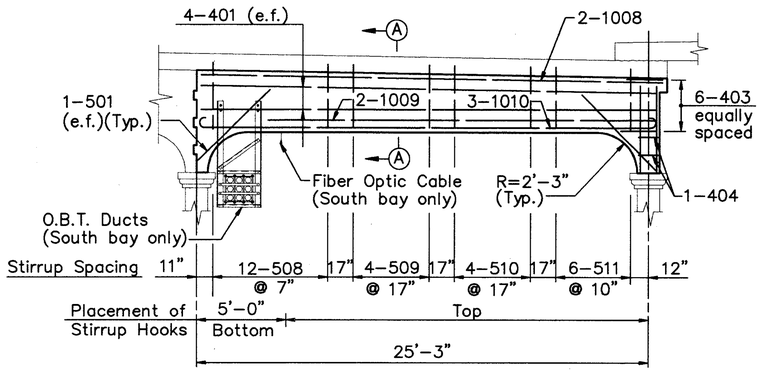

INTERIOR FLOORBEAM ELEVATION
SPANS 1, 2, 6, 7, AND 8
(Looking east)
(South bay shown, north bay similar)

Note: For floorbeam 6,2 see sheet 119/270

INTERIOR FLOORBEAM REPLACEMENT QUANTITY SPANS 1, 2, 6, 7, AND 8		
SPAN	NORTH BAY	SOUTH BAY
1	5	10
2	——	7
6	——	2
7	——	3
8	1	1

NOTE:
Elevation at Top of Column Capital (at ℄ column) = Top of Lower Deck Elevation + 14.13'

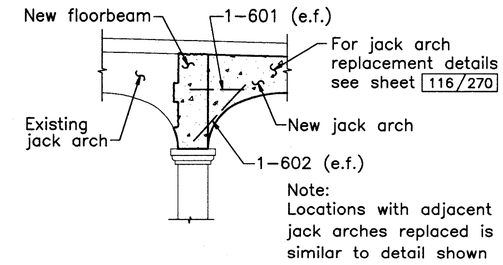

DETAIL AT REPLACEMENT JACK ARCH LOCATIONS

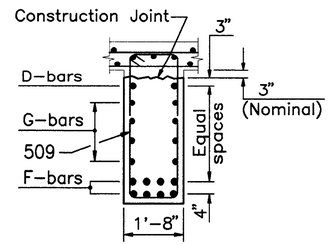

SECTION C–C

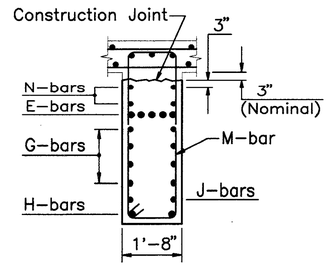

SECTION D–D

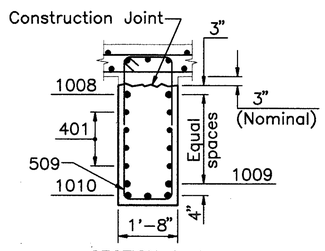

SECTION A–A

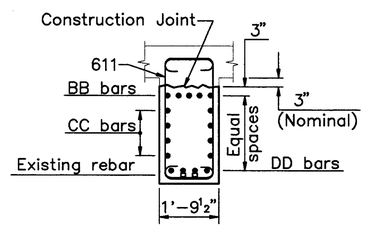

SECTION B–B

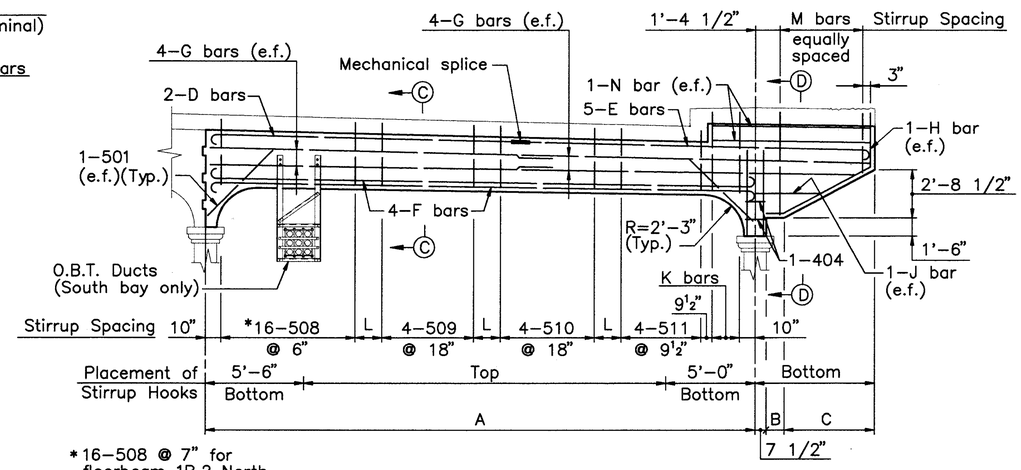

*16–508 @ 7" for floorbeam 1B,2 North

INTERIOR FLOORBEAM ELEVATION
SPAN 1B
(Looking east)
(South bay shown, north bay similar)

ALL REINFORCING BAR MARKS SHALL BE PREFIXED AS FOLLOWS:		
Span 1A	–	1AUEB
Span 1B	–	1BUEB
Span 1	–	1UEB
Span 2	–	2UEB
Span 6	–	6UEB
Span 7	–	7UEB
Span 8	–	8UEB

MINIMUM SPLICE LENGTH	
BAR	LENGTH
# 4	2'–3"

FOR FLOORBEAM REPLACEMENT DETAILS AT TOWER A, SEE SHEETS 73/270 AND 74/270.

FOR FLOORBEAM REPLACEMENT DETAILS AT TOWER B, SEE SHEET 75/270.

FOR REMOVAL DETAILS, SEE SHEET 50/270.

FOR UTILITY SUPPORT DETAILS, SEE SHEETS 232/270 AND 233/270.

e.f. DENOTES EACH FACE

prs. DENOTES PAIRS

ALL ELEVATIONS ARE GIVEN AT TOP OF COLUMN CAPITAL AT ℄ FLOORBEAM.

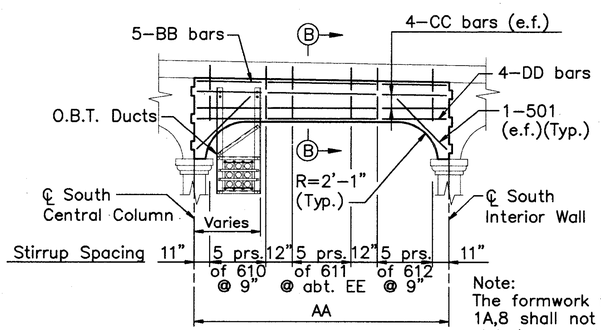

INTERIOR FLOORBEAM ELEVATION
SPAN 1A
(Looking east)

Note:
The formwork for floorbeams 1A,2 through 1A,8 shall not be removed until the deck slab is poured and acts compositely with the floorbeam.

TABLE OF DIMENSIONS, BAR MARKS AND ELEVATIONS – SPAN 1A						
Floorbeam	AA	BB	CC	DD	EE	ELEV.
1A,2	13'–7 9/16"	603	401	901	11½"	666.21
1A,3	13'–8 5/8"	604	402	902	11½"	666.51
1A,4	13'–9 11/16"	605	403	903	12"	666.81
1A,5	13'–10 3/4"	606	404	904	12"	667.11
1A,6	13'–11 13/16"	607	405	905	12½"	667.41
1A,7	14'–0 7/8"	608	406	906	12½"	667.71
1A,8	14'–1 15/16"	609	407	907	13"	668.01

TABLE OF DIMENSIONS, BAR MARKS AND ELEVATIONS – SPAN1B															
Floorbeam	A	B	C	D	E	F	G	H	J	K	L	M	N	ELEV.
1B,2 (South)	31'–3 3/4"	3'–0"	7'–8"	1018	1026	1010	406	603	414	9–512 @ Abt. 8¾"	16⅝"	1–Ser.8–513	416	668.81
1B,2 (North)	31'–3 3/4"	3'–0"	7'–8"	1018	1026	1010	406	603	414	8–512 @ Abt. 8½"	15"	1–Ser.8–513	417	668.81
1B,4 (South)	30'–1"	1'–2 3/4"	7'–8"	1019	1027	1011	407	604	415	8–512 @ Abt. 8"	16⅜"	1–Ser.7–514	418	669.31
1B,4 (North)	30'–1"	1'–2 3/4"	7'–8"	1019	1027	1011	407	604	415	7–512 @ Abt. 8¾"	17½"	1–Ser.7–514	419	669.31
1B,5 (South)	29'–5 3/4"	1'–0"	7'–0"	1020	1028	1012	408	605	415	7–512 @ Abt. 8"	16⅝"	1–Ser.7–514	420	669.56
1B,6 (South)	28'–10 1/2"	1–0"	6'–1 1/2"	1021	1029	1013	409	606	415	6–512 @ Abt. 8½"	16"	1–Ser.5–515	421	669.81
1B,7 (South)	28'–3"	1–0"	5'–2 3/4"	1022	1030	1014	410	607	415	5–512 @ Abt. 8½"	16⅜"	1–Ser.5–515	422	670.06
1B,8 (South)	27'–7 3/4"	1–0"	4'–4 1/4"	1023	1031	1015	411	608	415	4–512 @ Abt. 9"	16¼"	1–Ser.5–516	423	670.31
1B,9 (South)	27'–0 1/2"	1–0"	3'–5 1/2"	1024	1032	1016	412	609	415	4–512 @ Abt. 6¾"	16"	1–Ser.5–516	424	670.56
1B,11 (South)	25'–9 3/4"	1–0"	1'–8 1/4"	1025	1033	1017	413	610	415	2–512 @ Abt. 6"	16"	1–Ser.3–517	425	671.06

COUNTY BRIDGE NO. 84

HOWARD NEEDLES TAMMEN & BERGENDOFF
ARCHITECTS ENGINEERS PLANNERS
HNTB

REPLACEMENT UPPER DECK FLOORBEAMS
SPANS 1A THRU 2 AND 6 THRU 8
BR. NO. CUY – 6 – 1499
REHABILITATION OF
VETERANS MEMORIAL BRIDGE
(U.S. 6, 20, 42 & S.R. 3 OVER CUYAHOGA RIVER)
CLEVELAND CUYAHOGA COUNTY OHIO

DRAWN R.S.Y.	TRACED R.S.Y.	CHECKED A.D.Y.	REVIEWED C.A.B.	REVISED
DATE 6/18/93	DATE 6/18/93	DATE 3/8/94	DATE 3/31/94	SHEET 118/270

\11646\CONCRETE\UDFB1

FHWA REGION	STATE	PROJECT	
5	OHIO		

251/412

CUYAHOGA COUNTY
CUY – 6 – 14.99

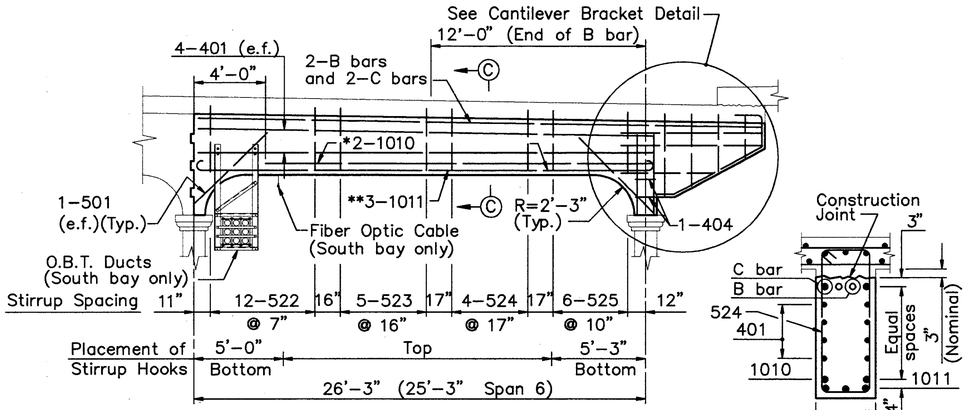

*2–1009 Floorbeam 6,2
**3–1010 Floorbeam 6,2

INTERIOR FLOORBEAM ELEVATION
SPANS 3 AND 5 AND FLOORBEAM 6,2
(Looking east)
(South bay shown)

SECTION C–C

TABLE OF DIMENSIONS, BAR MARKS AND ELEVATIONS										
Beam	A	B	C	D	E	F	G	H	ELEVATIONS SPAN 3	ELEVATIONS SPAN 5
3,2	——	——	1019	——	——	——	——	——	679.23	——
3,3	——	——	1019	——	——	——	——	——	679.49	——
3,4	0'–0"	1012	1020	604	521	——	——	——	679.75	——
3,5 and 5,14	0'–5⅞"	1013	1021	605	521	——	606	607	680.01	679.11
3,6 and 5,13	1'–0⅜"	1014	1022	608	521	——	609	610	680.27	679.44
3,7 and 5,12	1'–7½"	1015	1023	611	521	1–508	612	609	680.53	679.77
3,8 and 5,11	2'–2⅝"	——	——	613	521	1–509	614	615	680.79	680.10
3,9 and 5,10	2'–9⅛"	——	——	616	521	1–510	617	612	681.05	680.42
3,10 and 5,9	3'–2⅞"	——	——	618	521	1–511and1–512	619	620	681.31	680.75
3,11 and 5,8	3'–7⅞"	——	——	621	521	1–513and1–508	622	614	681.57	681.08
3,12 and 5,7	4'–0⅜"	1016	1024	623	521	1–514and1–515	624	625	681.83	681.41
3,13 and 5,6	4'–4"	——	——	626	521	1–Ser.3–516	627	617	682.09	681.74
3,14 and 5,5	4'–7⅛"	——	——	628	521	1–Ser.3–517	629	630	682.35	682.07
3,15 and 5,4	4'–9½"	——	——	631	521	1–Ser.3–518	632	630	682.61	682.40
3,16	4'–11⅛"	——	——	633	521	1–Ser.3–519	632	619	682.86	——
3,17	5'–0⅛"	——	——	633	521	1–Ser.3–519	632	619	683.12	——
3,18	5'–0½"	——	——	633	521	1–Ser.3–519	603	619	683.38	——
5,3	4'–11⅛"	1018	1026	634	521	1–Ser.3–520	633	619	——	682.73
5,2	5'–0⅛"	1017	1025	634	521	1–Ser.3–520	633	619	——	683.06
5,1	5'–0½"	——	——	634	521	1–Ser.3–520	603	619	——	683.38
6,2	0'–2½"	1011	1012	603	521	——	604	604	678.12	(SPAN 6)

NOTE A:
Dowel into existing floorbeam at locations where the floorbeam is not being replaced.

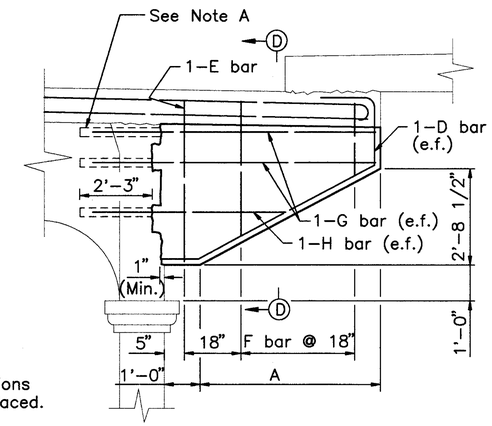

CANTILEVER BRACKET DETAIL
(Longitudinal Slab bars not shown)

NOTE: The formwork for the cantilever brackets shall not be removed until the deck slab is poured and acts compositely with the floorbeam.

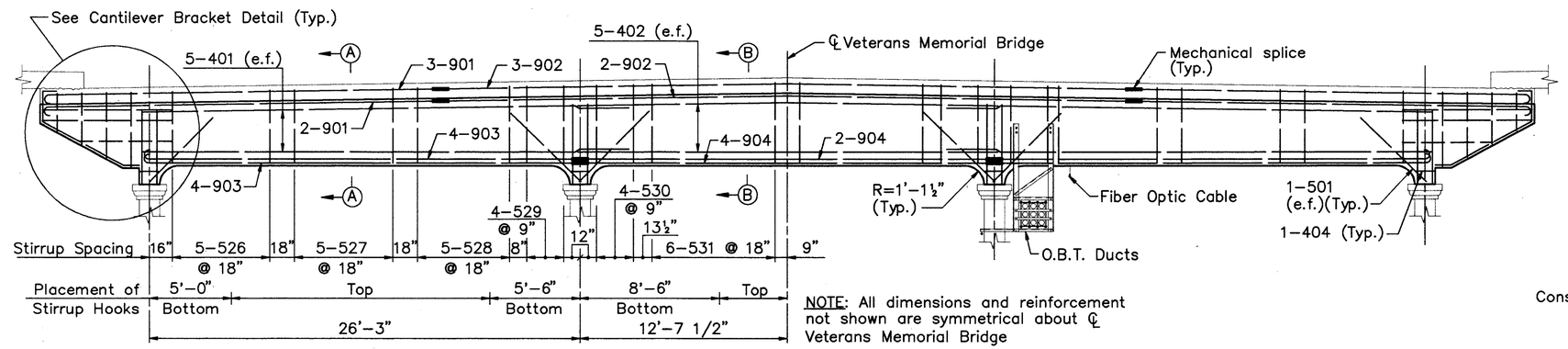

NOTE: All dimensions and reinforcement not shown are symmetrical about ℄ Veterans Memorial Bridge

ELEVATION–FLOORBEAMS 3,18 AND 5,1
(Looking east)

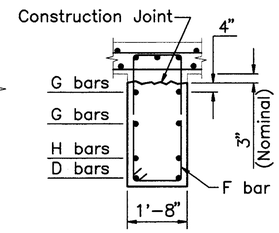

SECTION D–D

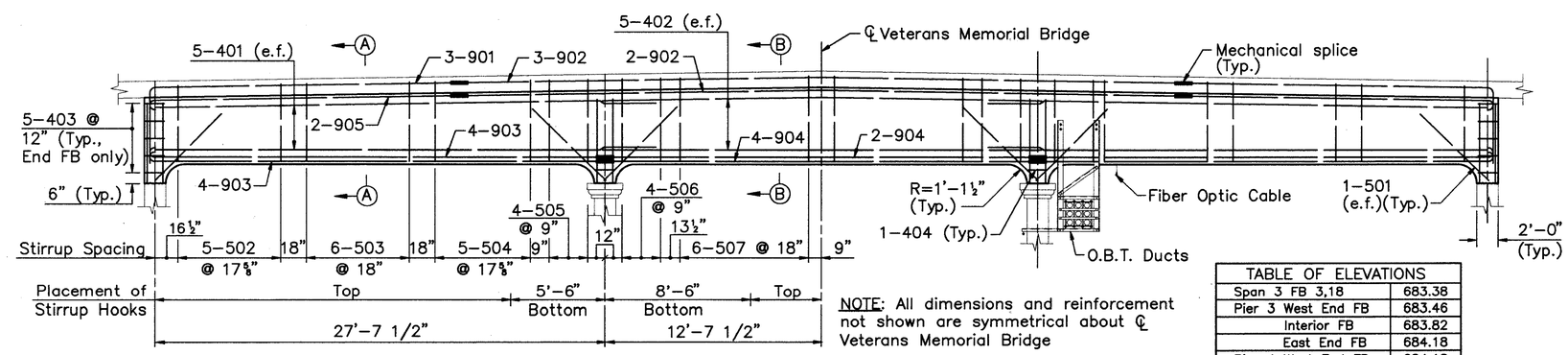

NOTE: All dimensions and reinforcement not shown are symmetrical about ℄ Veterans Memorial Bridge

ELEVATION–FLOORBEAMS AT PIERS 3 AND 4
(Looking east)
(End floorbeam shown, interior floorbeam similar)

TABLE OF ELEVATIONS	
Span 3 FB 3,18	683.38
Pier 3 West End FB	683.46
Interior FB	683.82
East End FB	684.18
Pier 4 West End FB	684.18
Interior FB	683.82
East End FB	683.46
Span 5 FB 5,1	683.38

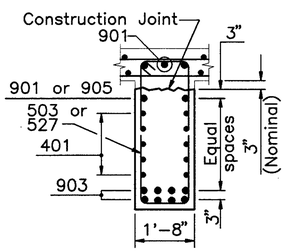

SECTION A–A

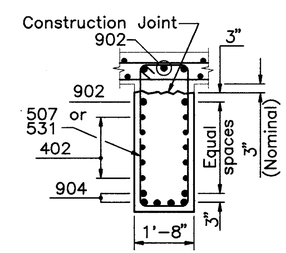

SECTION B–B

ALL REINFORCING BAR MARKS SHALL BE PREFIXED AS FOLLOWS:		
Span 3	–	3UEB
Span 5	–	5UEB
Span 6	–	6UEB
Pier 3	–	P3UEB
Pier 4	–	P5UEB

MINIMUM SPLICE LENGTH	
BAR	LENGTH
# 4	2'–3"

FOR DETAIL AT REPLACEMENT JACK ARCH LOCATIONS, SEE SHEET 118/270.

FOR REMOVAL DETAILS, SEE SHEET 50/270.

FOR UTILITY SUPPORT DETAILS, SEE SHEETS 232/270 AND 233/270.

e.f. DENOTES EACH FACE

FB DENOTES FLOORBEAM

ALL ELEVATIONS ARE GIVEN AT TOP OF COLUMN CAPITAL AT ℄ FLOORBEAM.

COUNTY BRIDGE NO. 84

HOWARD NEEDLES TAMMEN & BERGENDOFF
ARCHITECTS ENGINEERS PLANNERS
HNTB

REPLACEMENT UPPER DECK FLOORBEAMS
SPANS 3 AND 5
BR. NO. CUY – 6 – 1499
REHABILITATION OF
VETERANS MEMORIAL BRIDGE
(U.S. 6, 20, 42 & S.R. 3 OVER CUYAHOGA RIVER)
CLEVELAND CUYAHOGA COUNTY OHIO

DRAWN R.S.Y.	TRACED R.S.Y.	CHECKED A.D.Y.	REVIEWED C.A.B.	REVISED
DATE 6/18/93	DATE 6/18/93	DATE 3/10/94	DATE 3/31/94	SHEET 119/270

\11646\CONCRETE\UDFB3

FHWA REGION	STATE	PROJECT	
5	OHIO		

252
412

CUYAHOGA COUNTY
CUY – 6 – 14.99

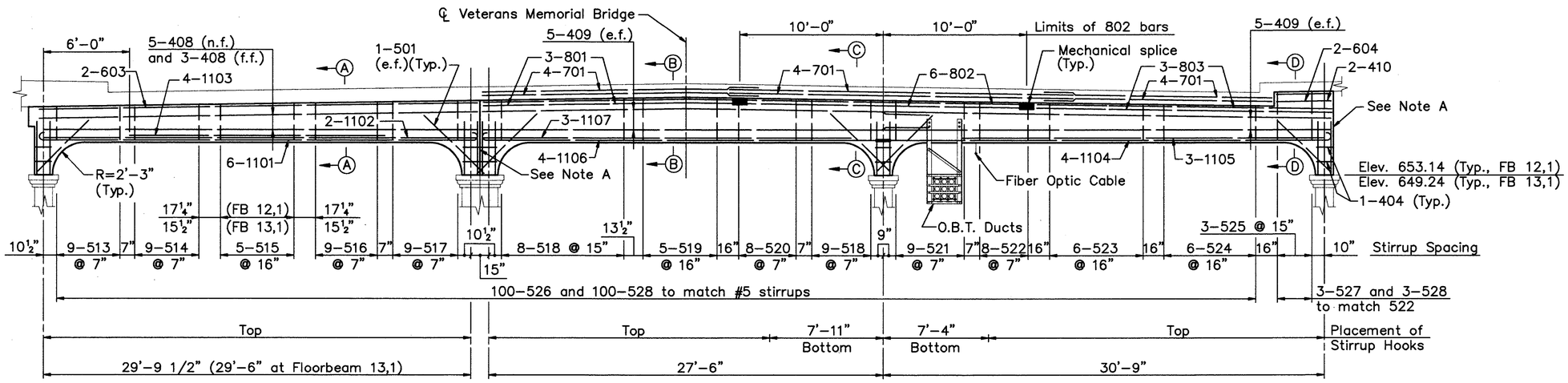

FLOORBEAM 12,1
(Looking east)
(Floorbeam 13,1 similar except as noted)

Note A:
Place 2 layers of polyethylene bond breaker (705.06) on all contact surfaces. (Include with item 511 for payment)

ALL REINFORCING BAR MARKS SHALL BE PREFIXED AS FOLLOWS:		
Span 11	–	11UEB
Span 12	–	12UEB
Span 13	–	13UEB

MINIMUM SPLICE LENGTH	
BAR	LENGTH
# 4	2'–3"
# 7	4'–8"

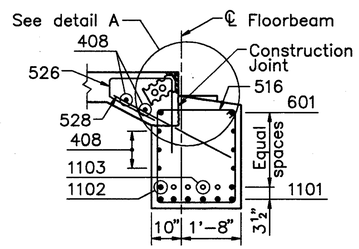

SECTION A–A

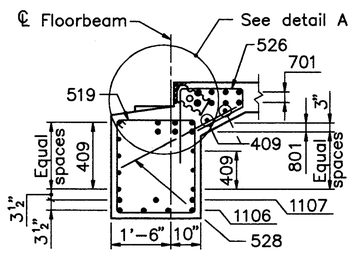

SECTION B–B

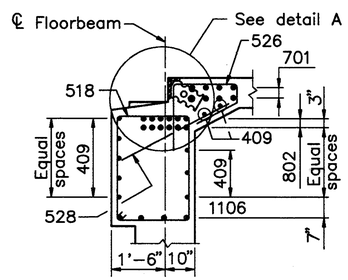

SECTION C–C

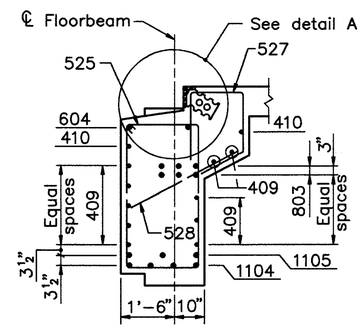

SECTION D–D

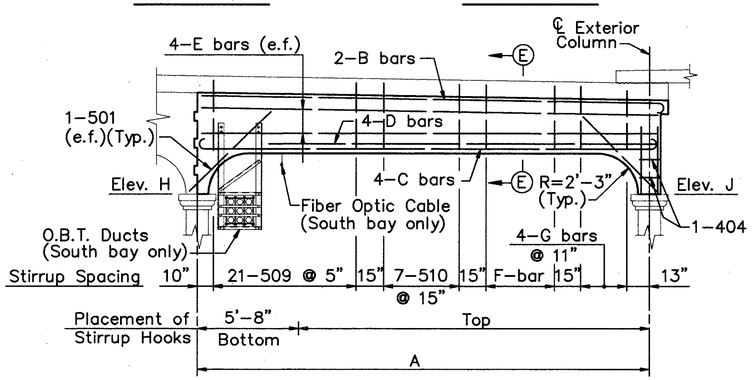

INTERIOR FLOORBEAM ELEVATION
SPANS 11 AND 13
(Looking east)
(South bay shown, north bay similar)

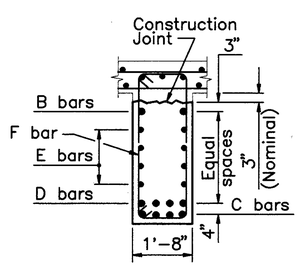

SECTION E–E

TABLE OF DIMENSIONS, BAR MARKS AND ELEVATIONS – SPANS 11 AND 13									
Floorbeam	A	B	C	D	E	F	G	ELEV. H	ELEV. J
11,5 (North Bay)	28'–8 3/8"	1008	1010	1012	406	6–511 @ Abt. 10 1/2"	511	654.42	654.42
11,6 (North Bay)	29"–6 3/4"	1009	1011	1013	407	6–511 @ Abt. 12 3/4"	511	654.11	654.11
13,2 (South Bay)	30'–9"	1008	1010	1012	406	7–511 @ Abt. 13"	512	648.90	648.88
13,3 (South Bay)	30'–9"	1008	1010	1012	406	7–511 @ Abt. 13"	512	648.56	648.52
13,3 (North Bay)	29'–11"	1009	1011	1013	407	7–511 @ Abt. 11 1/4"	512	648.59	648.63
13,4 (South Bay)	30'–9"	1008	1010	1012	406	7–511 @ Abt. 13"	512	648.21	648.15

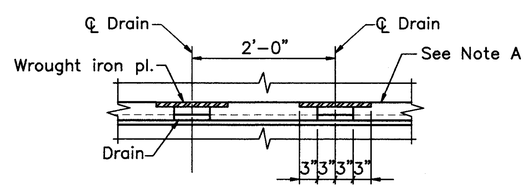

SECTION F–F

Note: Do not place drains over jack arch.

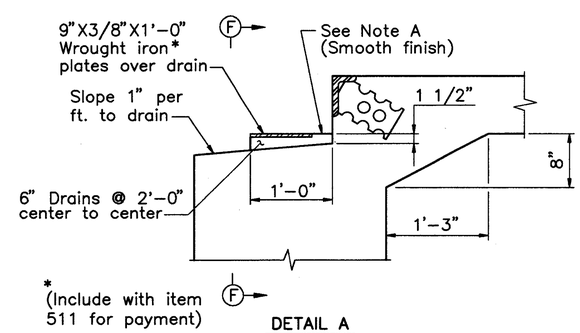

DETAIL A

NOTES:
FOR DETAIL AT REPLACEMENT JACK ARCH LOCATIONS, SEE SHEET 118/270.

FOR REMOVAL DETAILS, SEE SHEET 50/270.

FOR UTILITY SUPPORT DETAILS, SEE SHEETS 232/270 AND 233/270.

e.f. DENOTES EACH FACE

n.f. DENOTES NEAR FACE

f.f. DENOTES FAR FACE

FB DENOTES FLOORBEAM

ALL ELEVATIONS ARE GIVEN AT TOP OF COLUMN CAPITAL AT ℄ FLOORBEAM.

SUGGESTED CONSTRUCTION SEQUENCE

1. PLACE NORTH BAY OF FLOORBEAMS 12,1 AND 13,1 TO CONSTRUCTION JOINT SHOWN IN SECTION A–A.
2. PLACE DECK OF SPAN 13 AND CENTER AND SOUTH BAYS OF FLOORBEAM 13,1 MONOLITHICALLY.
3. PLACE DECK OF SPAN 12 AND CENTER AND SOUTH BAYS OF FLOORBEAM 12,1 MONOLITHICALLY.
4. PLACE DECK SPAN 11.

THE CONTRACTOR MAY PROPOSE AN ALTERNATE PROCEDURE AS APPROVED BY THE DIRECTOR.

COUNTY BRIDGE NO. 84

HOWARD NEEDLES TAMMEN & BERGENDOFF
ARCHITECTS ENGINEERS PLANNERS
HNTB

REPLACEMENT UPPER DECK FLOORBEAMS
SPANS 11, 12, AND 13
BR. NO. CUY – 6 – 1499
REHABILITATION OF
VETERANS MEMORIAL BRIDGE
(U.S. 6, 20, 42 & S.R. 3 OVER CUYAHOGA RIVER)
CLEVELAND CUYAHOGA COUNTY OHIO

DRAWN R.S.Y.	TRACED R.S.Y.	CHECKED A.D.Y.	REVIEWED C.A.B.	REVISED
DATE 6/18/93	DATE 6/18/93	DATE 3/11/94	DATE 3/31/94	SHEET 120/270

\11646\CONCRETE\UDFB4

FHWA REGION	STATE	PROJECT	
5	OHIO		

253/412

CUYAHOGA COUNTY
CUY – 6 – 14.99

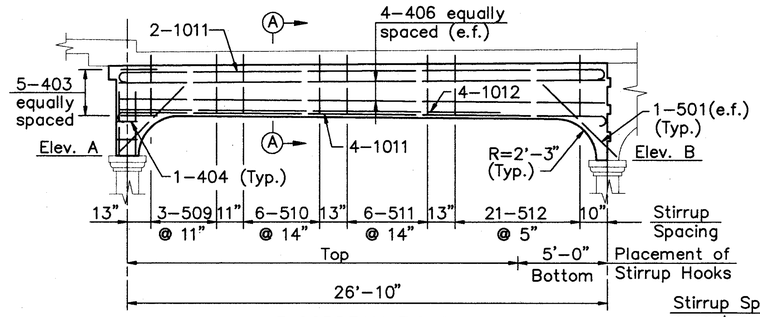

FLOORBEAM E.S.,2
(North bay shown)
(Floorbeams E.S.,4 thru E.S.,6 similar)

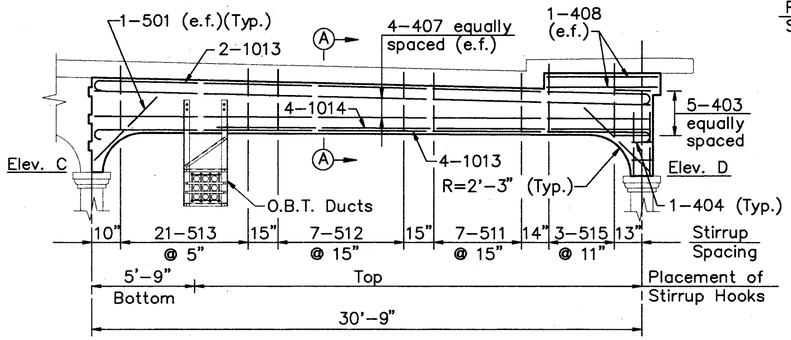

FLOORBEAM E.S.,2
(South bay shown)
(Floorbeams E.S.,3 thru E.S.,6 similar)

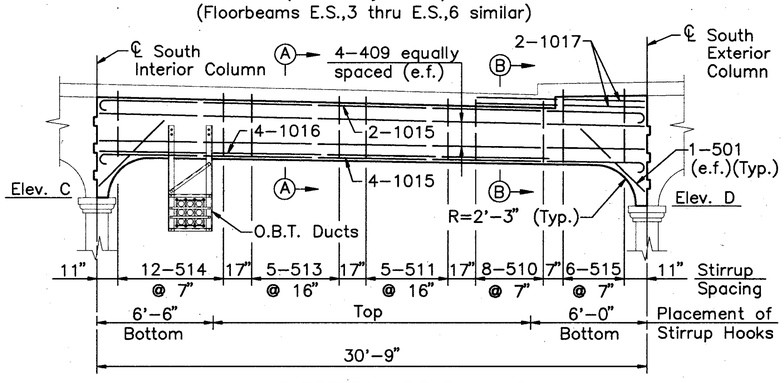

FLOORBEAM E.S.,7

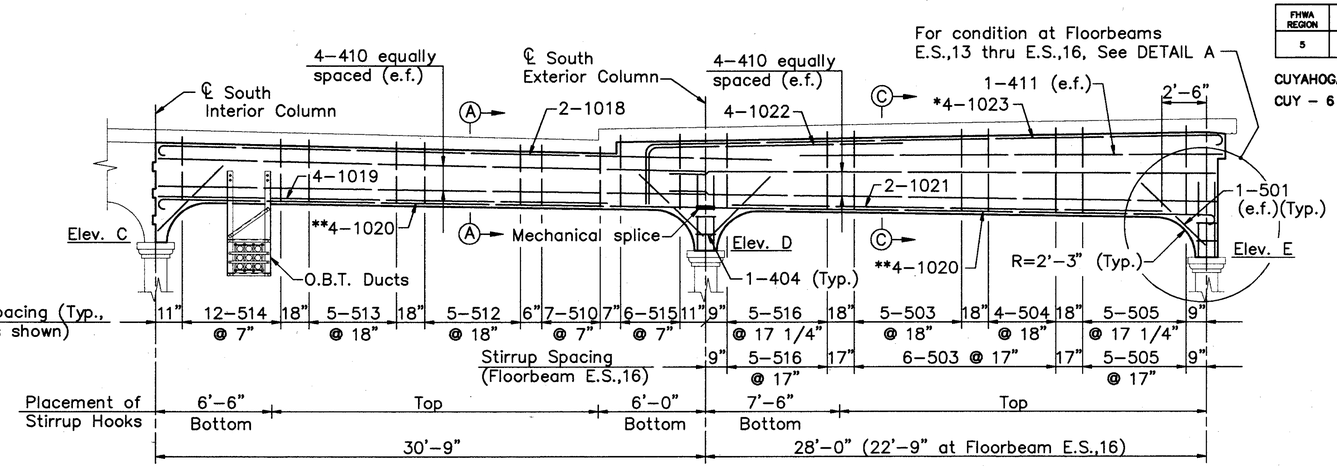

FLOORBEAM E.S.,8
(Floorbeams E.S.,9 thru E.S.,16 similar)

* 4–1024 floorbeam E.S.,16 only
** 4–1008 floorbeam E.S.,16 only

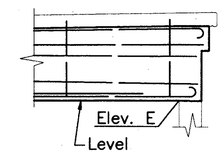

DETAIL A

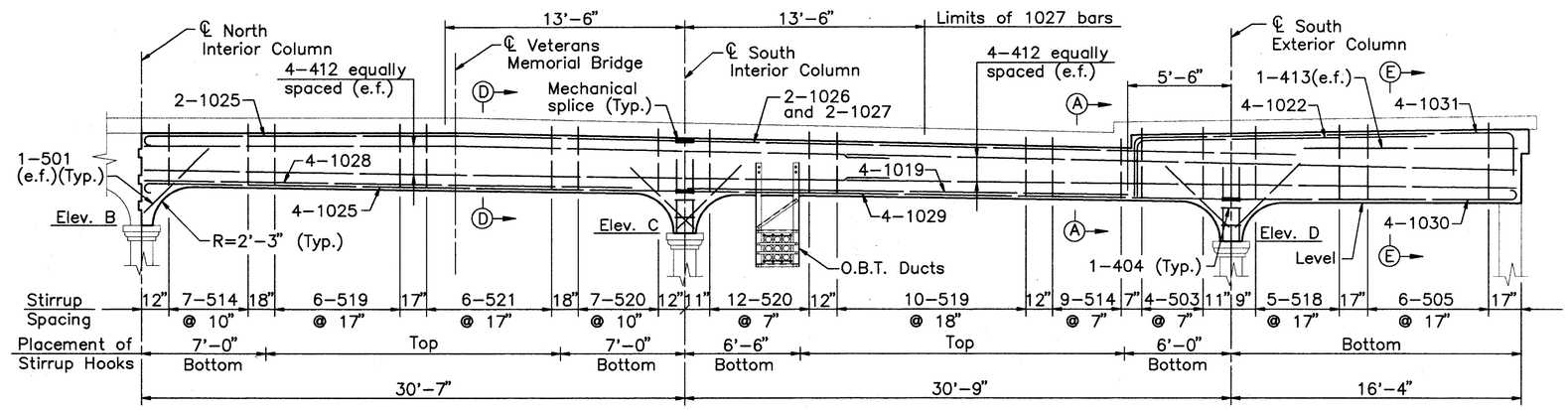

FLOORBEAM E.S.,17

ALL REINFORCING BAR MARKS SHALL BE PREFIXED AS FOLLOWS:
East Side Station – ESUEB

MINIMUM SPLICE LENGTH	
BAR	LENGTH
# 4	2'–3"

TABLE OF ELEVATIONS – WEST STATION					
Floorbeam	Elev. A	Elev. B	Elev. C	Elev. D	Elev. E
E.S.,2	646.47	646.32	646.14	645.98	——
E.S.,3	——	——	645.80	645.62	——
E.S.,4	645.85	645.67	645.45	645.27	——
E.S.,5	645.55	645.34	645.11	644.91	——
E.S.,6	645.24	645.02	644.76	644.56	——
E.S.,7	——	——	644.42	644.20	——
E.S.,8	——	——	644.07	643.78	643.64
E.S.,9	——	——	643.73	643.42	643.28
E.S.,10	——	——	644.38	643.05	642.93
E.S.,11	——	——	643.04	642.69	642.57
E.S.,12	——	——	642.69	642.33	642.22
E.S.,13	——	——	642.35	641.96	644.21
E.S.,14	——	——	642.01	641.60	643.85
E.S.,15	——	——	641.66	641.23	643.48
E.S.,16	——	——	641.32	640.87	643.12
E.S.,17	——	641.45	640.98	640.52	——

NOTES:

FOR DETAIL AT REPLACEMENT JACK ARCH LOCATIONS, SEE SHEET 118/270.

FOR REMOVAL DETAILS, SEE SHEETS 50/270, 61/270 AND 62/270.

FOR UTILITY SUPPORT DETAILS, SEE SHEETS 232/270 AND 233/270.

e.f. DENOTES EACH FACE

COUNTY BRIDGE NO. 84

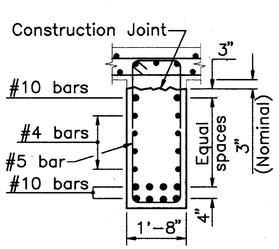

SECTION A–A

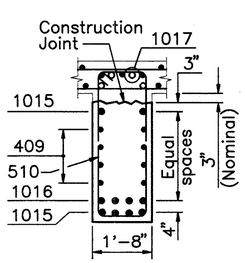

SECTION B–B

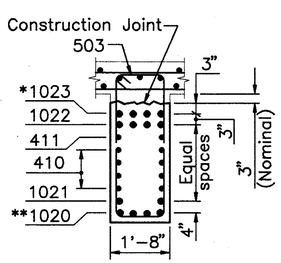

SECTION C–C

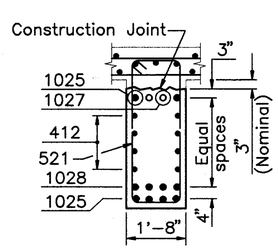

SECTION D–D

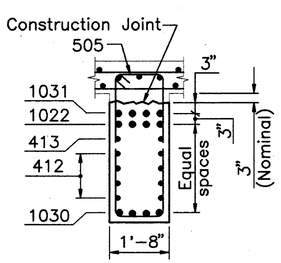

SECTION E–E

HOWARD NEEDLES TAMMEN & BERGENDOFF
ARCHITECTS ENGINEERS PLANNERS
HNTB

REPLACEMENT UPPER DECK FLOORBEAMS
EAST SIDE STATION
BR. NO. CUY – 6 – 1499
REHABILITATION OF
VETERANS MEMORIAL BRIDGE
(U.S. 6, 20, 42 & S.R. 3 OVER CUYAHOGA RIVER)
CLEVELAND CUYAHOGA COUNTY OHIO

DRAWN R.S.Y.	TRACED R.S.Y.	CHECKED A.D.Y.	REVIEWED C.A.B.	REVISED
DATE 6/18/93	DATE 6/18/93	DATE 3/18/94	DATE 3/31/94	SHEET 121/270

\11646\CONCRETE\UDFB5

FHWA REGION	STATE	PROJECT	
5	OHIO		

254 / 412

CUYAHOGA COUNTY
CUY – 6 – 14.99

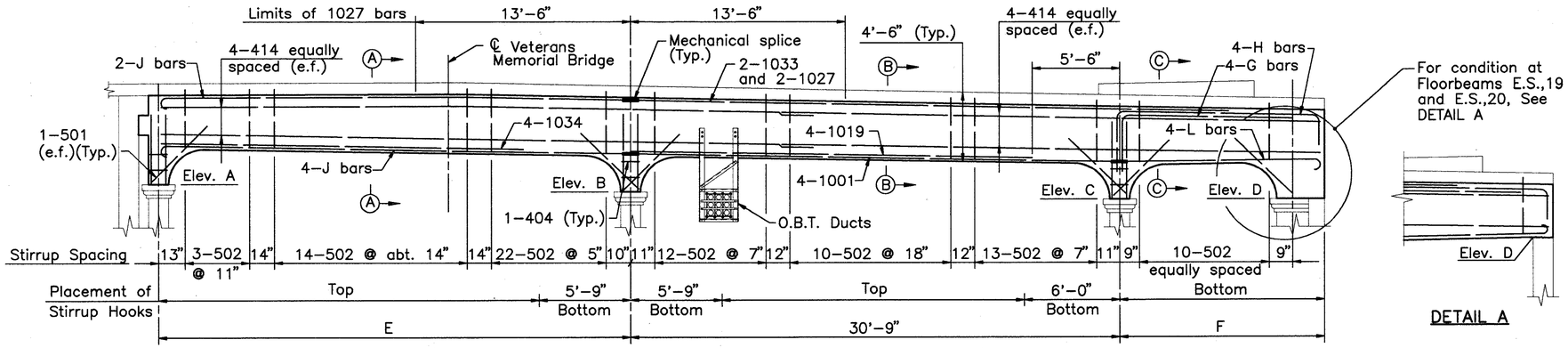

FLOORBEAM E.S.,18
(Floorbeams E.S.,19 and E.S.,20 similar)

DETAIL A

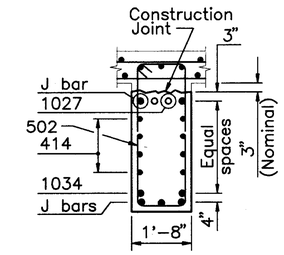

SECTION A–A

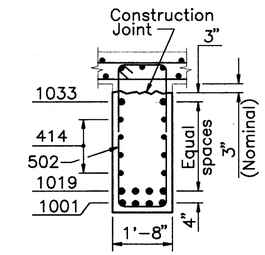

SECTION B–B

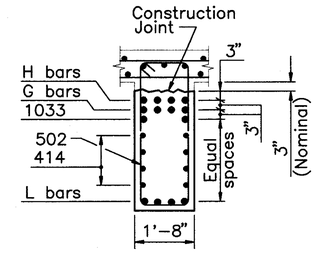

SECTION C–C

TABLE OF DIMENSIONS, BAR MARKS AND ELEVATIONS – WEST STATION										
Floorbeam	Elev. A	Elev. B	Elev. C	Elev. D	E	F	G bar	H bar	J bar	L bar
18	641.13	640.66	640.17	640.17	29'–6"	12'–10 1/2"	1036	1039	1032	1010
19	640.82	640.33	639.83	641.86	29'–8"	14'–1 1/2"	1037	1039	1035	1041
20	640.53	640.02	639.50	641.60	29'–10"	10'–3 1/4"	1038	1040	1009	1042
21	——	640.25	639.72	641.36	——	——	——	——	——	——

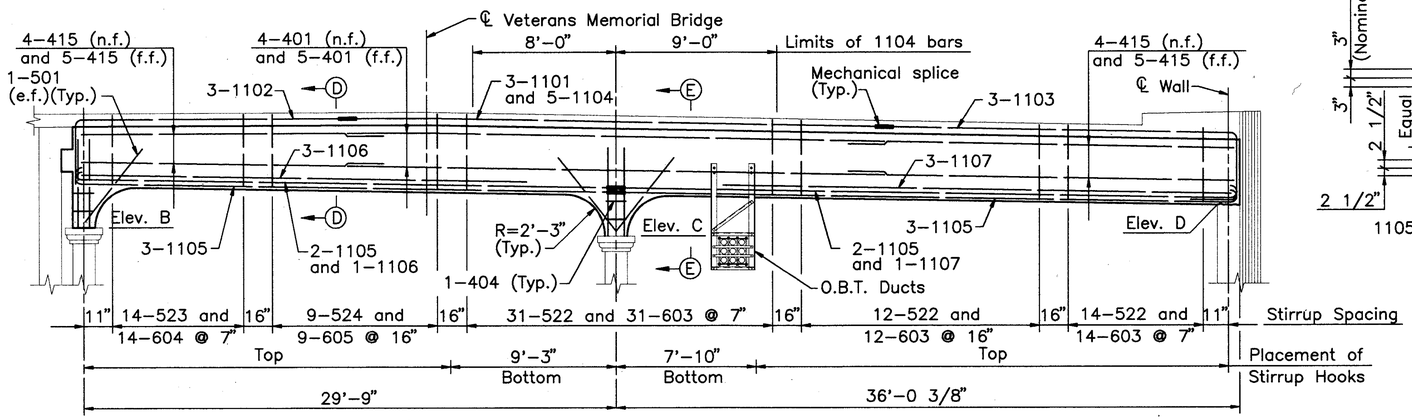

FLOORBEAM E.S.,21
(Looking east)

TABLE OF DIMENSIONS AND BAR MARKS					
Beam	A	B	C	D	E
18	28'–11 1/2"	801	525	21–504	4"
19	27'–1 3/8"	802	526	19–517	9"
20	25'–0 1/2"	803	527	18–521	6"
21	22'–9 1/4"	804	528	16–519	9"

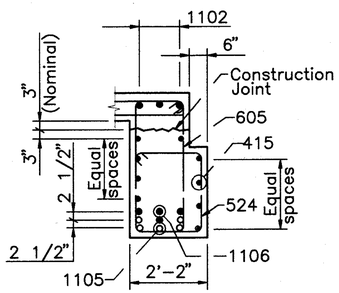

SECTION D–D

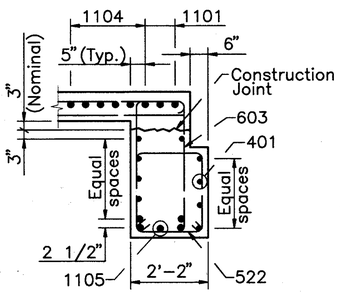

SECTION E–E

ALL REINFORCING BAR MARKS SHALL BE PREFIXED AS FOLLOWS:
East Side Station – ESUEB

MINIMUM SPLICE LENGTH	
BAR	LENGTH
# 4	2'–3"

NOTES:

THE FORMWORK FOR FLOORBEAM E.S.,21 SHALL NOT BE REMOVED UNTIL THE DECK SLAB IS POURED AND ACTS COMPOSITELY WITH THE FLOORBEAM.

ALL EXCAVATION AND BACKFILL REQUIRED FOR GRADE BEAMS SHALL BE INCLUDED WITH ITEM 202 FOR PAYMENT.

FOR DETAIL AT REPLACEMENT JACK ARCH LOCATIONS, SEE SHEET 118/270.

FOR REMOVAL DETAILS, SEE SHEETS 50/270, 61/270 AND 62/270.

FOR UTILITY SUPPORT DETAILS, SEE SHEETS 232/270 AND 233/270.

e.f. DENOTES EACH FACE

f.f. DENOTES FAR FACE

n.f. DENOTES NEAR FACE

COUNTY BRIDGE NO. 84

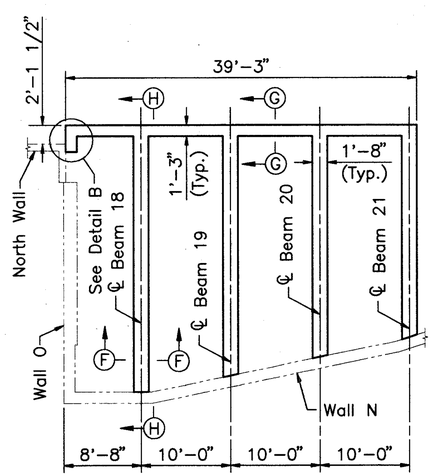

PLAN
(Grade beams)

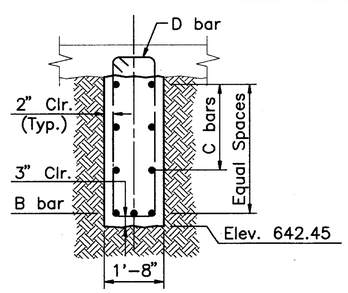

SECTION F–F
(Slab reinforcement not shown)

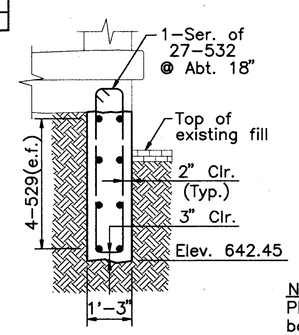

SECTION G–G
(Slab reinforcement not shown)

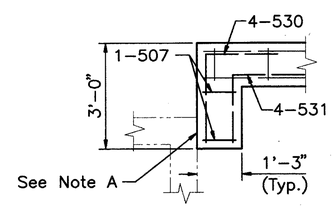

DETAIL B

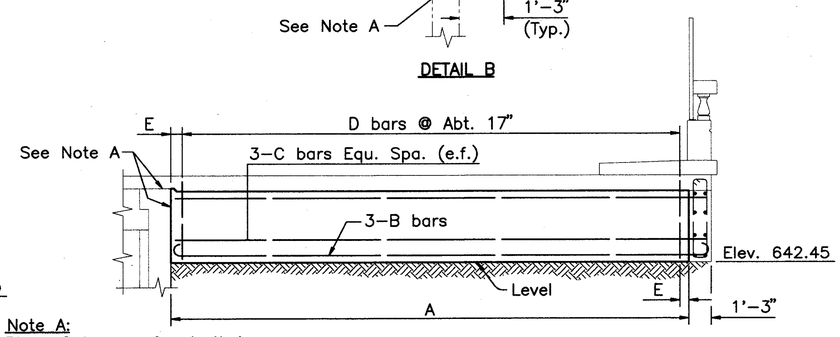

Note A:
Place 2 layers of polyethylene bond breaker (705.06) on all contact surfaces. (Include with item 511 for payment.)

SECTION H–H
(Slab reinforcement not shown)

HOWARD NEEDLES TAMMEN & BERGENDOFF
ARCHITECTS ENGINEERS PLANNERS
HNTB

REPLACEMENT UPPER DECK FLOORBEAMS
EAST SIDE STATION
BR. NO. CUY – 6 – 1499
REHABILITATION OF
VETERANS MEMORIAL BRIDGE
(U.S. 6, 20, 42 & S.R. 3 OVER CUYAHOGA RIVER)
CLEVELAND CUYAHOGA COUNTY OHIO

DRAWN R.S.Y.	TRACED R.S.Y.	CHECKED A.D.Y.	REVIEWED C.A.B.	REVISED
DATE 11/18/93	DATE 11/18/93	DATE 3/18/94	DATE 3/31/94	SHEET 122/270

\11646\CONCRETE\UDFB7

FHWA REGION	STATE	PROJECT	
5	OHIO		

255/412

CUYAHOGA COUNTY
CUY – 6 – 14.99

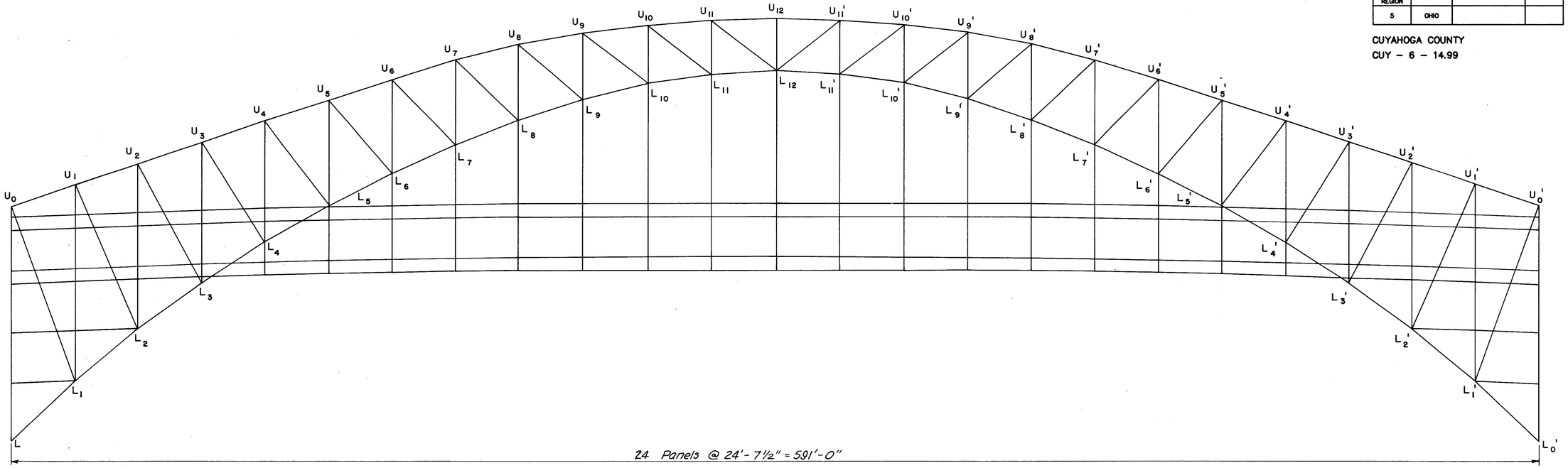

ELEVATION

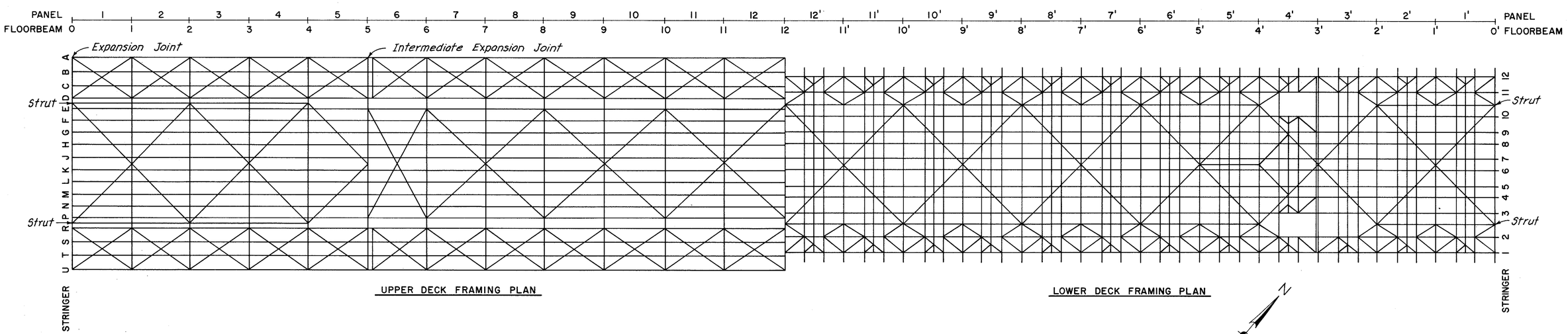

UPPER DECK FRAMING PLAN

LOWER DECK FRAMING PLAN

20' 10' 0' 10' 20' 30'
SCALE IN FEET
1"=20'

Note:
All framing plans are symmetrical about floorbeam 12.

COUNTY BRIDGE NO. 84

HOWARD NEEDLES TAMMEN & BERGENDOFF
ARCHITECTS ENGINEERS PLANNERS
HNTB

FRAMING PLAN – SPAN 4
UPPER AND LOWER DECKS
BR. NO. CUY – 6 – 1499
REHABILITATION OF
VETERANS MEMORIAL BRIDGE
(U.S. 6, 20, 42 & S.R. 3 OVER CUYAHOGA RIVER)

CLEVELAND CUYAHOGA COUNTY OHIO

DRAWN C.K.B.	TRACED G.C.A.	CHECKED C.E.P.	REVIEWED C.A.B.	REVISED
DATE 4/11/90	DATE 4/12/90	DATE 4/18/90	DATE 4/5/94	SHEET 123/270

FHWA REGION	STATE	PROJECT	
5	OHIO		

256
412

CUYAHOGA COUNTY
CUY – 6 – 14.99

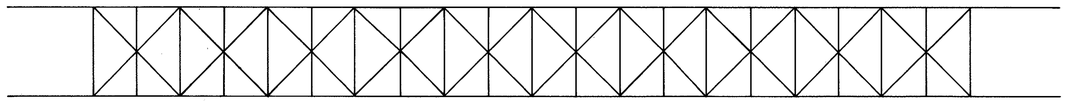

TOP CHORD LATERAL BRACING

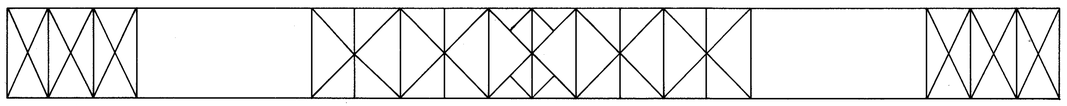

BOTTOM CHORD LATERAL BRACING

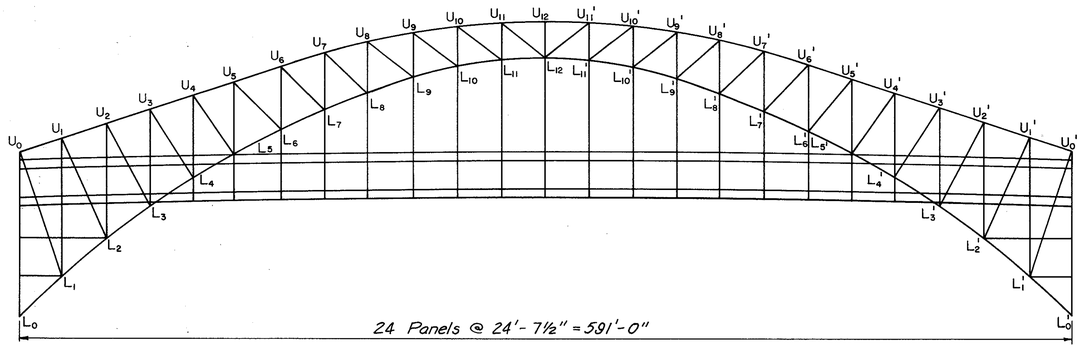

ELEVATION

50 0 50 100 150 200

SCALE IN FEET

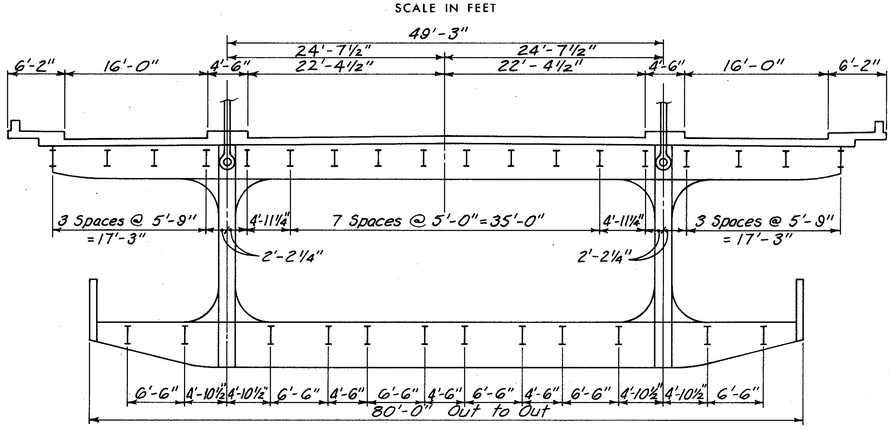

TYPICAL SUSPENDED DECK CROSS SECTION
PANEL POINTS 6 THRU 6'

8 0 8 16

SCALE IN FEET

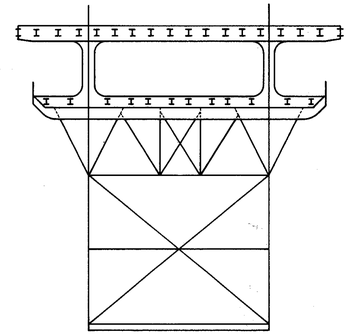

SECTION U_0-L_0

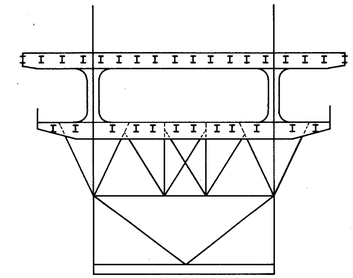

SECTION U_1-L_1

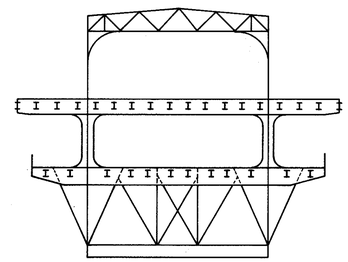

SECTION U_2-L_2

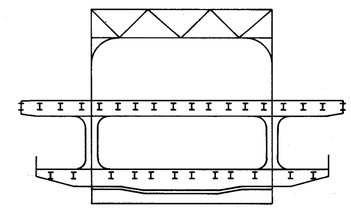

SECTION U_3-L_3

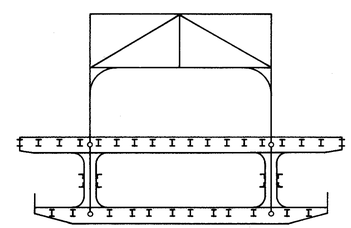

SECTION U_4-L_4

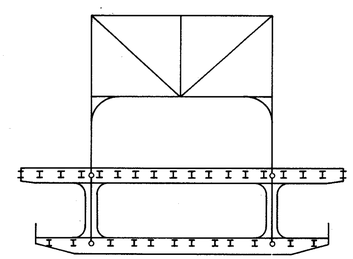

SECTION U_5-L_5

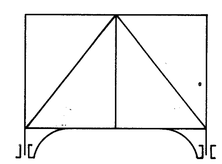

SECTION U_6-L_6

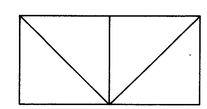

SECTION U_7-L_7, U_9-L_9, U_{11}-L_{11}

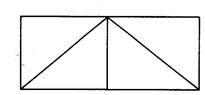

SECTION U_8-L_8, U_{10}-L_{10}, U_{12}-L_{12}

20 15 10 5 0 10 20

SCALE IN FEET

COUNTY BRIDGE NO. 84

HOWARD NEEDLES TAMMEN & BERGENDOFF
ARCHITECTS ENGINEERS PLANNERS
HNTB

FRAMING PLAN – SPAN 4
CROSS SECTIONS
BR. NO. CUY – 6 – 1499
REHABILITATION OF
VETERANS MEMORIAL BRIDGE
(U.S. 6, 20, 42 & S.R. 3 OVER CUYAHOGA RIVER)

CLEVELAND CUYAHOGA COUNTY OHIO

DRAWN C.K.B.	TRACED G.C.A.	CHECKED C.E.P.	REVIEWED C.A.B.	REVISED
DATE 4/12/90	DATE 4/13/90	DATE 4/18/90	DATE 4/5/94	SHEET 124/270

FHWA REGION	STATE	PROJECT	
5	OHIO		

257/412

CUYAHOGA COUNTY
CUY – 6 – 14.99

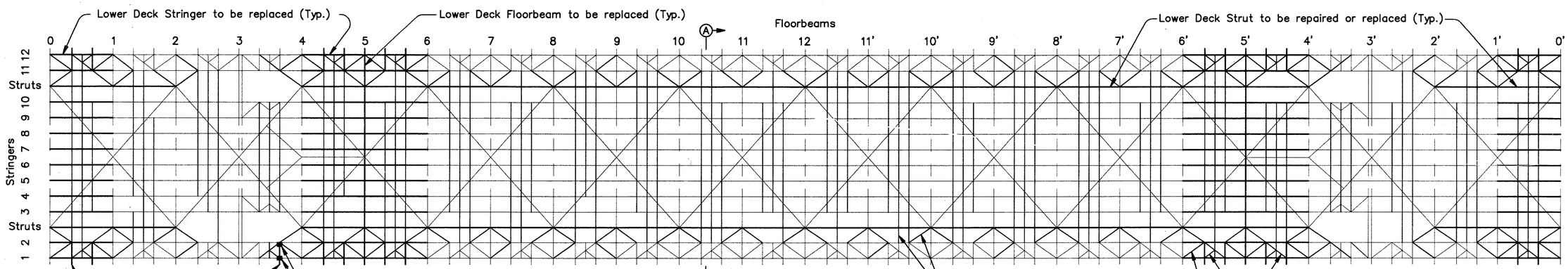

LOWER DECK SCHEMATIC PLAN

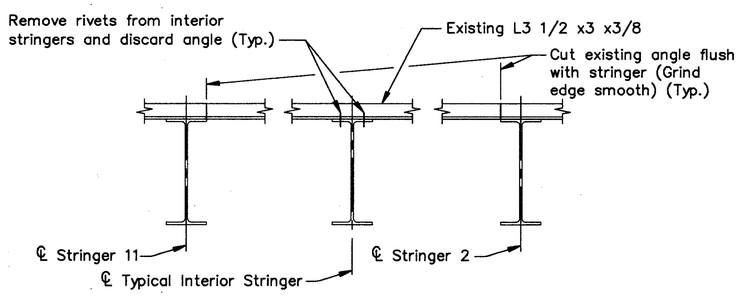

SECTION A–A

Note:
This occurs at 54 Locations.

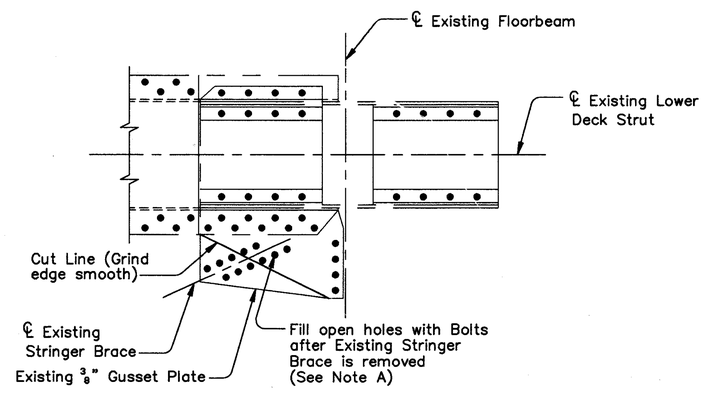

REMOVAL DETAIL AT LOWER DECK FLOORBEAM AND STRUT

Note:
This occurs at 11 Locations. At all other Locations the Existing 3/8" Gusset Plate is being replaced.

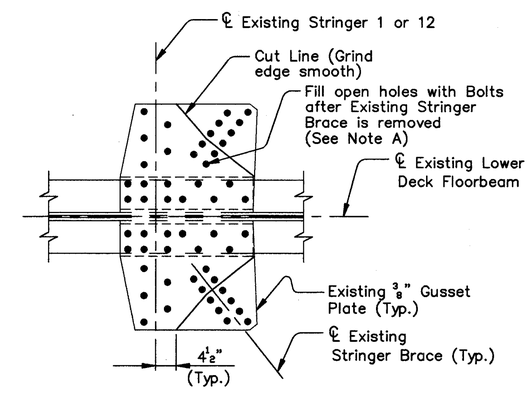

REMOVAL DETAIL AT LOWER DECK FLOORBEAM AND STRINGER

Note:
This occurs at 36 Locations.

NOTE A:
INCLUDE WITH ITEM 202–PORTIONS OF STRUCTURES REMOVED, AS PER PLAN, FOR PAYMENT.

NOTE:
REMOVAL OF EXISTING STRUCTURAL STEEL THAT WILL NOT BE REPLACED SHALL BE INCLUDED WITH ITEM 202–PORTIONS OF STRUCTURES REMOVED, AS PER PLAN, FOR PAYMENT.

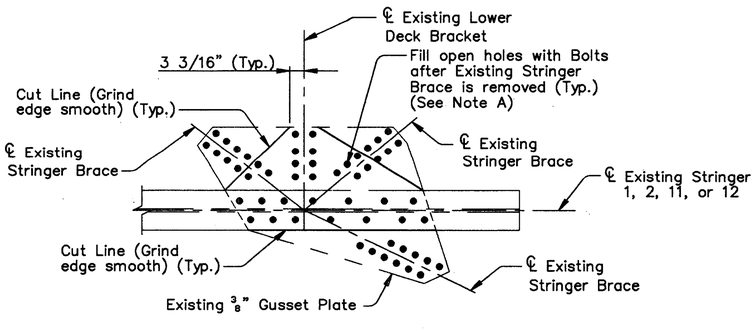

REMOVAL DETAIL AT LOWER DECK STRINGER AND BRACKET

Note:
This occurs at 89 Locations.

COUNTY BRIDGE NO. 84

HOWARD NEEDLES TAMMEN & BERGENDOFF
ARCHITECTS ENGINEERS PLANNERS
HNTB

LOWER DECK STEEL
REMOVAL DETAILS
BR. NO. CUY – 6 – 1499
REHABILITATION OF
VETERANS MEMORIAL BRIDGE
(U.S. 6, 20, 42 & S.R. 3 OVER CUYAHOGA RIVER)
CLEVELAND CUYAHOGA COUNTY OHIO

DRAWN	TRACED	CHECKED	REVIEWED	REVISED
ADY/JLV	ADY/JLV	JLV/ADY	CAB	
DATE 11/20/93	DATE 11/20/93	DATE 03/31/94	DATE 04/05/94	SHEET 125/270

\11646\STEEL\LDSREM

FHWA REGION	STATE	PROJECT	
5	OHIO		

258/412

CUYAHOGA COUNTY
CUY – 6 – 14.99

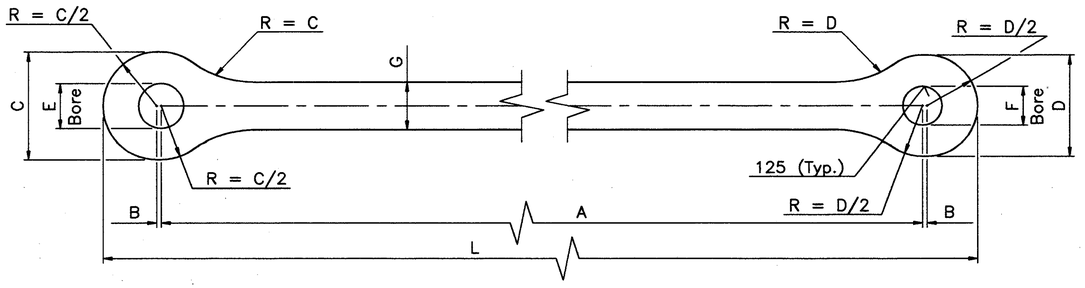

HANGER DETAIL

DIMENSION TABLE FOR HANGERS

HANGER	A	B	C	D	E	F	G	t	L	QUANTITY
H4	19'–2 25/32"	0	1'–3"	1'–4"	6 9/16"	7 9/16"	6"	1 1/4"	20'–6 9/32"	8
H5	19'–2 9/32"	0	1'–3"	1'–4"	6 9/16"	7 3/16"	6"	1 1/4"	20'–5 25/32"	8
H6	16'–0 1/8"	3/4"	1'–6"	1'–5"	7 9/16"	6 9/16"	8"	1 3/8"	17'–7 1/8"	8
H7	26'–5 13/32"	3/4"	1'–6"	1'–5"	7 9/16"	6 9/16"	8"	1 3/8"	28'–0 13/32"	8
H8	35'–6 27/32"	3/4"	1'–6"	1'–5"	7 9/16"	6 9/16"	8"	1 3/8"	37'–1 27/32"	8
H9	43'–5 9/32"	3/4"	1'–6"	1'–5"	7 9/16"	6 9/16"	8"	1 3/8"	45'–0 9/32"	8
H10	49'–5 1/16"	3/4"	1'–6"	1'–5"	7 9/16"	6 9/16"	8"	1 3/8"	51'–0 1/16"	8
H11	52'–11 3/16"	3/4"	1'–6"	1'–5"	7 9/16"	6 9/16"	8"	1 3/8"	54'–6 3/16"	8
H12	51'–1"	3/4"	1'–6"	1'–5"	7 9/16"	6 9/16"	8"	1 3/8"	52'–8"	4

t = Hanger Thickness

NOTE:
PIN COLLARS SHALL BE ASTM A36 STEEL AND SHALL BE INCLUDED WITH ITEM 513–STRUCTURAL STEEL (AISC CATEGORY I), AS PER PLAN FOR PAYMENT.

DIMENSION TABLE FOR PIN COLLARS

PIN COLLAR	D	W	L	QUANTITY
CL4	6 5/8"	2 1/2"	1'–9 1/2"	8
CU4	7 5/8"	2 1/4"	2'–0 1/2"	8
CU4A	7 5/8"	2 5/8"	2'–0 1/2"	8
CL5	6 5/8"	9 1/4"	1'–9 1/2"	8
CU5	7 1/4"	6 1/4"	2'–0 1/2"	8
CU5A	7 1/4"	7/8"	2'–0 1/2"	8
CL6–12	7 5/8"	2 1/4"	2'–0 1/2"	52
CU6–11	6 5/8"	1 1/4"	1'–9 1/2"	48
CU6–11X	6 5/8"	8 1/2"	1'–9 1/2"	24

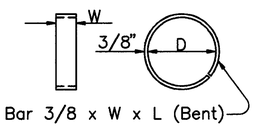

PIN COLLAR DETAIL

DIMENSION TABLE FOR PINS AND NUTS

PIN	A	B	C	D	E	F	G	H	J	K	QUANTITY
PU4 w/**	1'–9 1/2"	2 1/8"	5 1/2"	7 17/32"	2'–4 1/4"	–	–	–	–	–	4
PU5 w/**	2'–0 7/8"	2 1/8"	5 1/2"	7 5/32"	2'–7 5/8"	–	–	–	–	–	4
PU6 w/*	1'–5 3/8"	2"	5"	6 17/32"	1'–11 7/8"	–	–	–	–	–	24
PU12 w/*	11 5/8"	2"	5"	6 17/32"	1'–6 1/8"	–	–	–	–	–	2
PL4 w/*	11 5/8"	2"	5"	6 17/32"	1'–6 1/8"	–	–	–	–	–	4
PL5 w/*	2'–0 7/8"	2"	5"	6 17/32"	2'–7 3/8"	–	–	–	–	–	4
PL6 w/**	11 3/4"	2 1/8"	5 1/2"	7 17/32"	1'–6 1/2"	–	–	–	–	–	26
NUT	A	B	C	D	E	F	G	H	J	K	QUANTITY
FN1	–	–	5"	–	–	5/8"	1 3/4"	7"	7 5/8"	8 7/8"	68
FN2	–	–	5 1/2"	–	–	3/4"	1 7/8"	8"	8 5/8"	10"	68

* – Denotes 2–FN1 Nuts
** – Denotes 2–FN2 Nuts

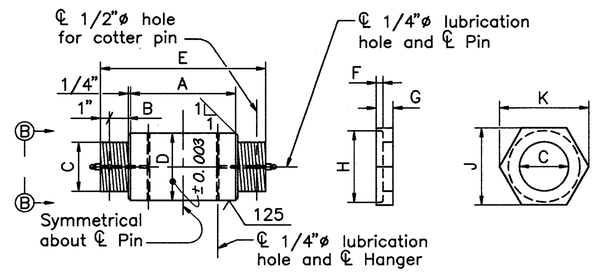

PIN RECESSED PIN NUT

PIN AND PIN NUT DETAILS

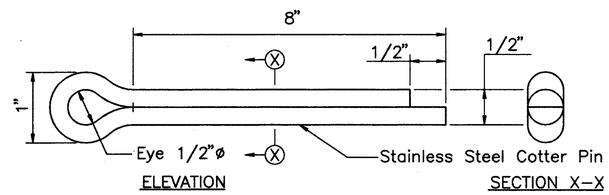

ELEVATION SECTION X–X

COTTER PIN DETAIL

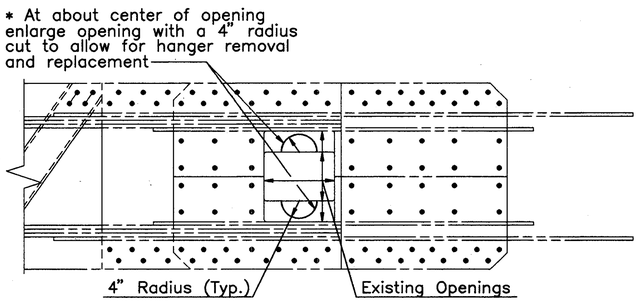

LOWER CHORD AT HANGER
(Looking down on lower half of Lower Chord)
(* Typical at Hangers H6 thru H11)

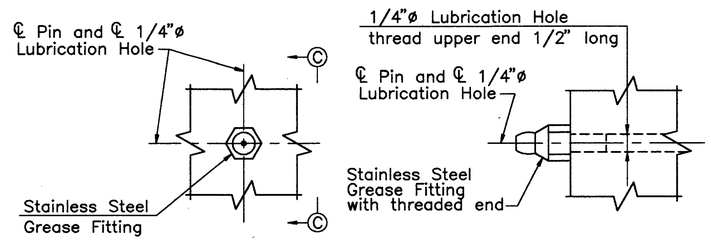

SECTION B–B SECTION C–C

GREASE FITTING DETAILS

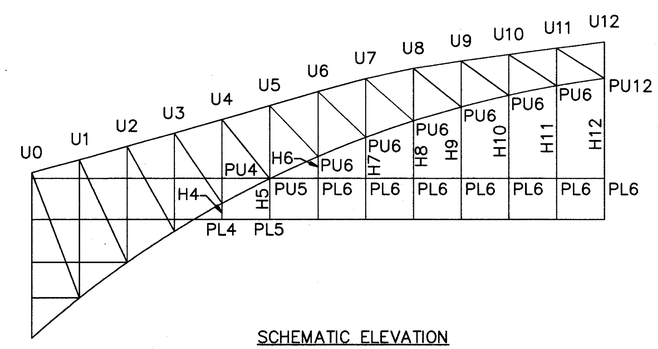

SCHEMATIC ELEVATION
(Symmetrical about ℄ of bridge and panel point 12)

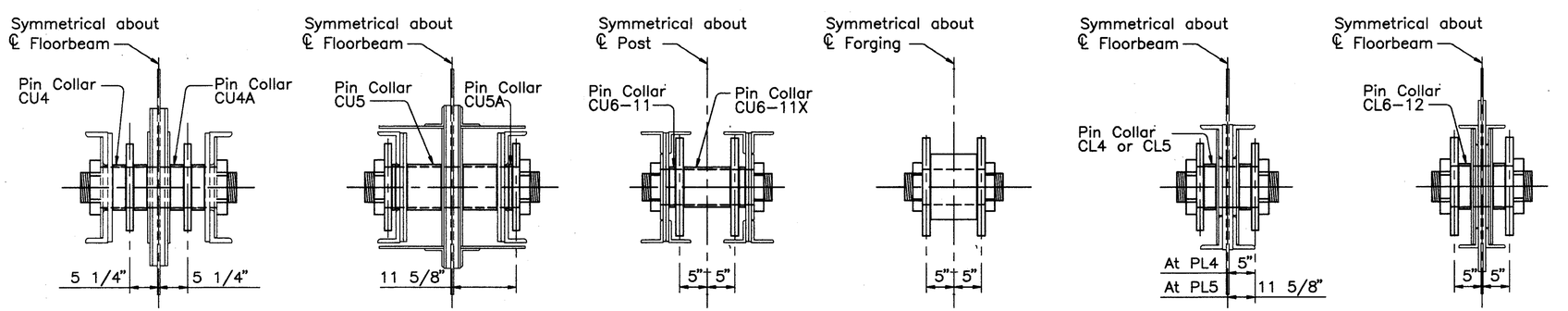

SECTION AT PIN PU4 SECTION AT PIN PU5 SECTION AT PIN PU6 SECTION AT PIN PU12 SECTION AT PIN PL4 AND PL5 SECTION AT PIN PL6

COUNTY BRIDGE NO. 84

HOWARD NEEDLES TAMMEN & BERGENDOFF
ARCHITECTS ENGINEERS PLANNERS
HNTB

REPLACEMENT –
PINS AND HANGERS
BR. NO. CUY – 6 – 1499
REHABILITATION OF
VETERANS MEMORIAL BRIDGE
(U.S. 6, 20, 42 & S.R. 3 OVER CUYAHOGA RIVER)
CLEVELAND CUYAHOGA COUNTY OHIO

DRAWN ADY	TRACED ADY	CHECKED JLV	REVIEWED CAB	REVISED
DATE 08/04/93	DATE 08/04/93	DATE 12/02/93	DATE 04/05/94	SHEET 126/270

\11646\STEEL\HANGERS

FHWA REGION	STATE	PROJECT	
5	OHIO		

259/412

CUYAHOGA COUNTY

CUY – 6 – 14.99

Floorbeam	A	B
1 and 1'	1'–6"	4 5/16"
2 and 2'	1'–7"	4 13/16"

TABLE 1 – TYPE I REPAIR PLATES

FLOORBEAM	Location 1	Location 2	Location 4	Location 5
PL THICKNESS	3/8"	1/2"	1/2"	3/8"
0	–	–	–	–
1	11x24	–	–	11x24
2	–	–	–	11x24
3	–	–	–	–
4	–	–	–	11x24
5	–	–	–	–
6	–	16x24	24x36, 24x36	–
7	–	–	16x24	–
8	–	24x30	20x24	–
9	–	18x24	24x30	11x24
10	–	–	30x36	–
11	–	12x24	18x24	–
12	–	–	–	–
11'	–	–	20x24	–
10'	–	26x36	24x27	–
9'	–	–	20x26	–
8'	–	20x24	24x30	–
7'	–	24x30	22x36	–
6'	–	–	–	–
5'	–	–	–	–
4'	–	–	–	–
3'	–	–	–	–
2'	11x24, 11x24	–	–	11x24, 11x24
1'	–	–	–	11x24, 11x24
0'	–	–	–	–

NOTE:
THERE ARE APPROXIMATELY 30 LOCATIONS THAT REQUIRE AN AVERAGE OF 4 (FOUR) FIELD DRILLED HOLES PER LOCATION.

TABLE 2 – TYPE II REPAIR PLATES

FLOORBEAM	Location 1	Location 2	Location 4	Location 5
0	6x12, 9x13	–	–	8x24, 7x12
1	12x15, 11x19	–	–	12x18, 13x17, 5x10
2	13x23, 5x10	–	–	7x8, 8x17, 7x8 9x14, 9x14
3	–	–	–	3x5
4	–	–	–	–
5	–	–	–	–
6	–	15½x30, 6x10 6x24, 6x24	15½x36	–
7	–	15½x30, 6x30, 6x30	15½x30	–
8	–	15½x30, 4x6	15½x36	–
9	–	6x24, 8x24	15½x36	–
10	–	15½x20	15½x36	–
11	–	*6x30, *6x30	6x12	–
12	–	–	15½x12	–
11'	–	–	15½x12, *6x20	–
10'	4x8	–	15½x36, *6x24, *7x24	–
9'	–	15½x15	15½x30, 4x12	–
8'	4x16	4x12, 10x10, 4x6	7x16, 5x36, 6x24, 6x24	–
7'	4x10	15½x36	15½x36, 6x24	–
6'	4x12	4x6	15½x30, 6x22	–
5'	–	–	–	–
4'	–	–	–	–
3'	–	–	–	–
2'	9x18, 8x18	–	–	8x16, 8x16
1'	8x20, 8x18	–	–	9x16, 9x16
0'	9x9, 5x12, 9x9	–	–	6x32, 20x20

* – Remove existing plate and weld new plate to web.

TABLE 3 – TYPE III REPAIR DIMENSIONS

FLOORBEAM	Location 1	Location 2	Location 3	Location 4	Location 5
0	–	–	–	–	–
1	11x4	–	27x13	–	See NOTE A
2	–	–	36x13	5x2	See NOTE A
3	–	–	–	6x8	6x4
4	–	9x4	–	9x4	–
5	–	–	–	–	–
6	–	24x5	–	16x6	–
7	–	–	–	12x7, 7x7	–
8	–	–	–	12x6, 10x7	–
9	–	15x2, 12x4, 5x2	–	8x5, 15x4	–
10	–	–	–	–	–
11	–	6x3	–	6x3	–
12	–	–	–	–	–
11'	–	6x5, 5x4	–	12x6	–
10'	–	–	–	–	–
9'	–	6x3, 8x3	–	18x4	–
8'	–	–	–	–	–
7'	–	5x2, 5x2	–	7x5, 6x4	–
6'	–	–	–	–	–
5'	–	–	–	–	–
4'	–	10x2, 11x6, 10x5, 8x5	–	15x8, 10x6	–
3'	–	9x7	–	–	–
2'	14x13	–	41x13, 84x13	16x3	See NOTE A
1'	–	12x8	12x8	–	See NOTE A
0'	–	–	–	–	–

NOTE A:
REPLACE TOP COVER PLATE, SEE DETAIL A. (INCLUDE WITH ITEM 513–STRUCTURAL STEEL (AISC CATEGORY I), AS PER PLAN AND ITEM SPECIAL–REPLACE EXISTING FASTENERS WITH NEW HIGH STRENGTH BOLTS FOR PAYMENT)

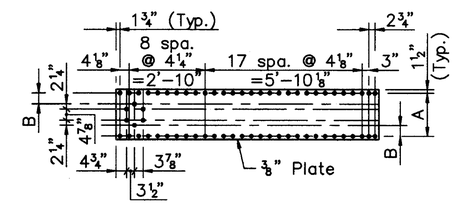

DETAIL A

TYPE I REPAIR:
THIS REPAIR CONSISTS OF REMOVING A PORTION OF THE EXISTING WEB PLATE, SURFACE PREPARATION OF THE EXISTING STEEL AND FABRICATION AND INSTALLATION OF THE NEW PLATE. SURFACE PREPARATION SHALL INCLUDE THE PREPARATION REQUIRED TO PROVIDE A COMPLETE JOINT PENETRATION WELD IN ACCORDANCE WITH THE O.D.O.T. CONSTRUCTION AND MATERIAL SPECIFICATIONS ITEM 513.17 WELDING. ALL WORK SHALL BE PERFORMED IN ACCORDANCE WITH GENERAL NOTE #29 ITEM 513–STRUCTURAL STEEL (AISC CATEGORY I), AS PER PLAN. PAYMENT FOR TYPE I REPAIRS SHALL BE BASED ON THE ACTUAL PLATE DIMENSIONS. (INCLUDE WITH ITEM 513–STRUCTURAL STEEL (AISC CATEGORY I), AS PER PLAN FOR PAYMENT)

TYPE II REPAIR:
THIS REPAIR CONSISTS OF SURFACE PREPARATION OF THE EXISTING STEEL AND FABRICATION AND INSTALLATION OF THE NEW REINFORCING PLATES. SURFACE PREPARATION OF EXISTING STEEL SHALL INCLUDE CLEANING THE EXISTING STEEL TO SOUND METAL FROM RUST, PAINT, ETC., IMMEDIATELY PRIOR TO WELDING THE NEW PLATES IN PLACE. ALL WORK SHALL BE PERFORMED IN ACCORDANCE WITH GENERAL NOTE #29 ITEM 513–STRUCTURAL STEEL (AISC CTEGORY I), AS PER PLAN. PAYMENT FOR TYPE II REPAIRS SHALL BE BASED ON THE ACTUAL PLATE DIMENSIONS. (INCLUDE WITH ITEM 513–STRUCTURAL STEEL (AISC CATEGORY I), AS PER PLAN FOR PAYMENT).

TYPE III REPAIR:
THIS REPAIR CONSISTS OF REMOVING A PORTION OF THE FLANGE ANGLE AND/OR PLATE BY NEATLY CUTTING AWAY THE DETERIORATED AREA AND GRINDING THE CUT EDGE SMOOTH. (INCLUDE WITH ITEM 202 FOR PAYMENT).

FOR UTILITY SUPPORT DETAILS, SEE SHEETS 232/270, 233/270 AND 233A/270.

THE DIMENSIONS AND LOCATIONS SHOWN IN TABLES 1, 2, AND 3 ARE FOR ESTIMATING PURPOSES ONLY. THE ACTUAL DIMENSIONS AND LOCATIONS SHALL BE DETERMINED IN THE FIELD AS DIRECTED BY THE ENGINEER.

– DENOTES TYPICAL TYPE I REPAIR LOCATION

– DENOTES TYPICAL TYPE II REPAIR LOCATION

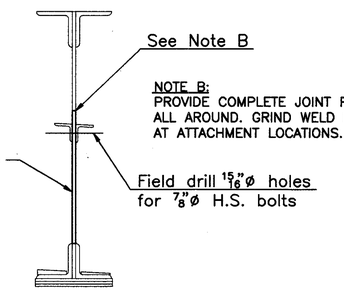

SECTION A–A

TYPICAL TYPE I REPAIR DETAIL

NOTE B:
PROVIDE COMPLETE JOINT PENETRATION WELD ALL AROUND. GRIND WELD FLUSH WITH WEB AT ATTACHMENT LOCATIONS.

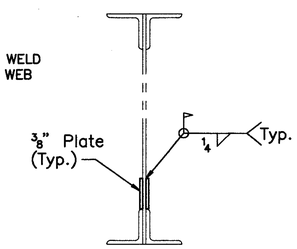

SECTION B–B

TYPICAL TYPE II REPAIR DETAIL

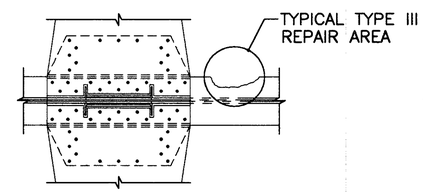

SECTION C–C
(Existing condition)

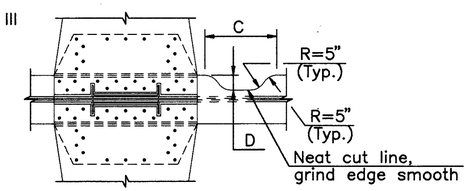

SECTION C–C
(Repaired condition)

TYPICAL TYPE III REPAIR DETAIL

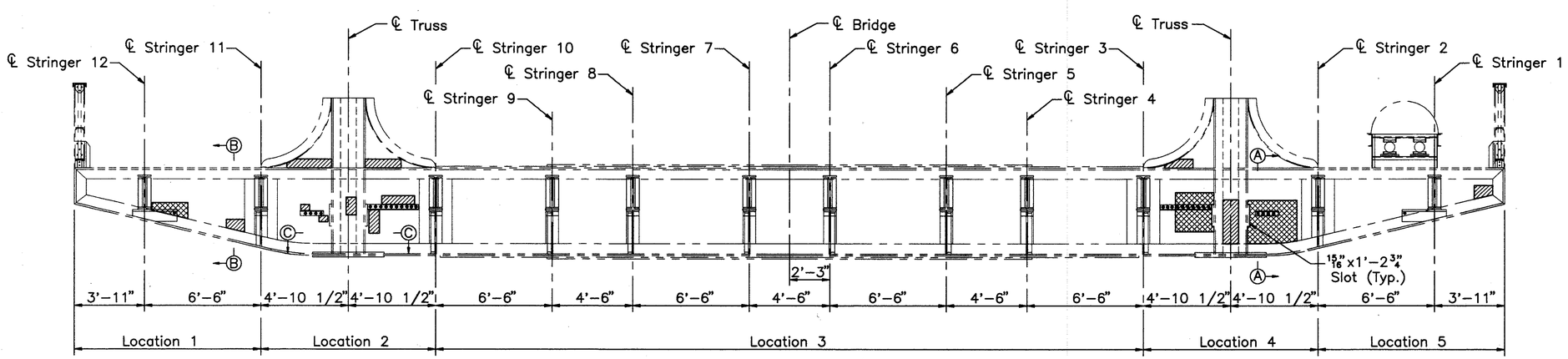

TYPICAL FLOORBEAM ELEVATION
(Looking east)

COUNTY BRIDGE NO. 84

HOWARD NEEDLES TAMMEN & BERGENDOFF
ARCHITECTS ENGINEERS PLANNERS
HNTB

FLOORBEAM REPAIR DETAILS
SPAN 4
BR. NO. CUY – 6 – 1499
REHABILITATION OF
VETERANS MEMORIAL BRIDGE
(U.S. 6, 20, 42 & S.R. 3 OVER CUYAHOGA RIVER)

CLEVELAND CUYAHOGA COUNTY OHIO

DRAWN	TRACED	CHECKED	REVIEWED	REVISED
ADY	ADY	JLV	CAB	
DATE 04/26/94	DATE 04/26/94	DATE 03/31/94	DATE 06/05/94	SHEET 127/270

\11646\CONCRETE\FBREP

FHWA REGION	STATE	PROJECT	
5	OHIO		

260
412

CUYAHOGA COUNTY
CUY – 6 – 14.99

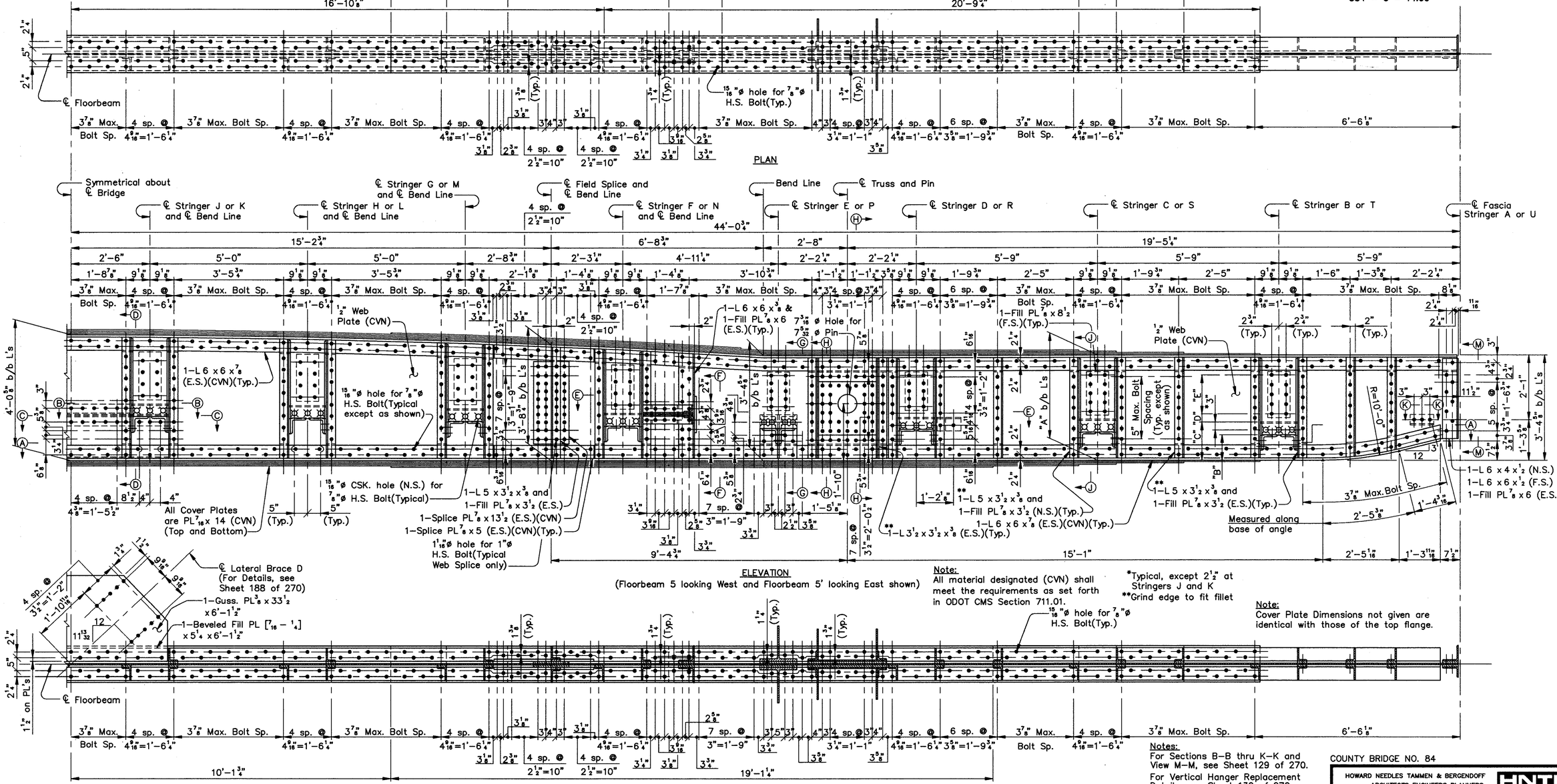

Note:
All material designated (CVN) shall meet the requirements as set forth in ODOT CMS Section 711.01.

Note:
Cover Plate Dimensions not given are identical with those of the top flange.

TABLE OF DIMENSIONS					
STRINGER	A	B	C	D	E
B and T	3'–4 5/8"	0'–9 7/8"	1'–2 3/4"	3 1/8"	4 sp. @ 3 3/4" = 1'–3"
C and S	3'–4 5/8"	0'–11"	1'–3 7/8"	3"	4 sp. @ 3 1/2" = 1'–2"
D and R	3'–4 5/8"	1'–0 1/8"	1'–4 5/8"	4 1/4"	4 sp. @ 3" = 1'–0"
E and P	3'–4 5/8"	1'–0 1/2"	1'–5 3/4"	3 1/8"	4 sp. @ 3" = 1'–0"
F and N	3'–7 3/8"	1'–1 3/8"	1'–6 1/4"	3 1/4"	3 sp. @ 4 1/2" = 1'–1 1/2"
G and M	3'–10 1/16"	1'–3 1/8"	1'–8"	3 1/4"	3 sp. @ 4 1/2" = 1'–1 1/2"
H and L	3'–11 11/16"	1'–4 3/8"	1'–9 1/4"	3 1/4"	3 sp. @ 4 1/2" = 1'–1 1/2"
J and K	4'–0 1/2"	1'–4 15/16"	1'–9 13/16"	3 1/4"	3 sp. @ 4 1/2" = 1'–1 1/2"

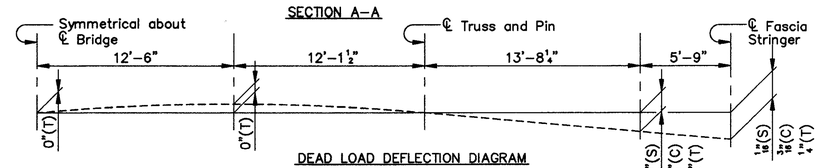

DEAD LOAD DEFLECTION DIAGRAM

Notes:
For Sections B–B thru K–K and View M–M, see Sheet 129 of 270.
For Vertical Hanger Replacement Details, see Sheet 130 of 270.
(E.S.) denotes Each Side.
(N.S.) denotes Near Side.
(F.S.) denotes Far Side.

Notes:
Floorbeam shall be cambered to compensate for the effects of dead load deflections. The Floorbeam cantilevers shall be horizontal under full dead load.
S = Deflection due to Steel
C = Deflection due to Concrete
T = Total Dead Load Deflection

COUNTY BRIDGE NO. 84

HOWARD NEEDLES TAMMEN & BERGENDOFF
ARCHITECTS ENGINEERS PLANNERS
HNTB

UPPER DECK FLOORBEAM 5 AND 5' REPLACEMENT DETAILS
BR. NO. CUY – 6 – 1499
REHABILITATION OF
VETERANS MEMORIAL BRIDGE
(U.S. 6, 20, 42 & S.R. 3 OVER CUYAHOGA RIVER)
CLEVELAND CUYAHOGA COUNTY OHIO

DRAWN	TRACED	CHECKED	REVIEWED	REVISED
J.L.V.	J.L.V.	A.D.Y.	C.A.B.	
DATE 11/09/93	DATE 11/09/93	DATE 11/23/93	DATE 4/05/94	SHEET 128/270

\11646\UDFB5A.DWG

FHWA REGION	STATE	PROJECT	
5	OHIO		

261/412

CUYAHOGA COUNTY
CUY – 6 – 14.99

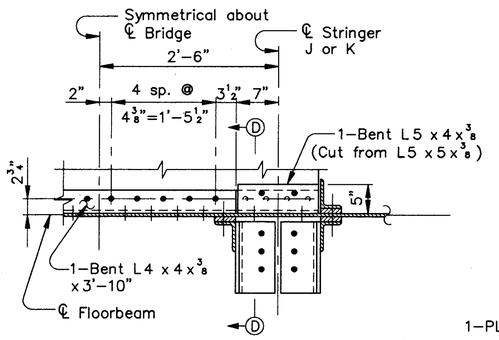

SECTION B–B
(Exp. Bearing not shown)

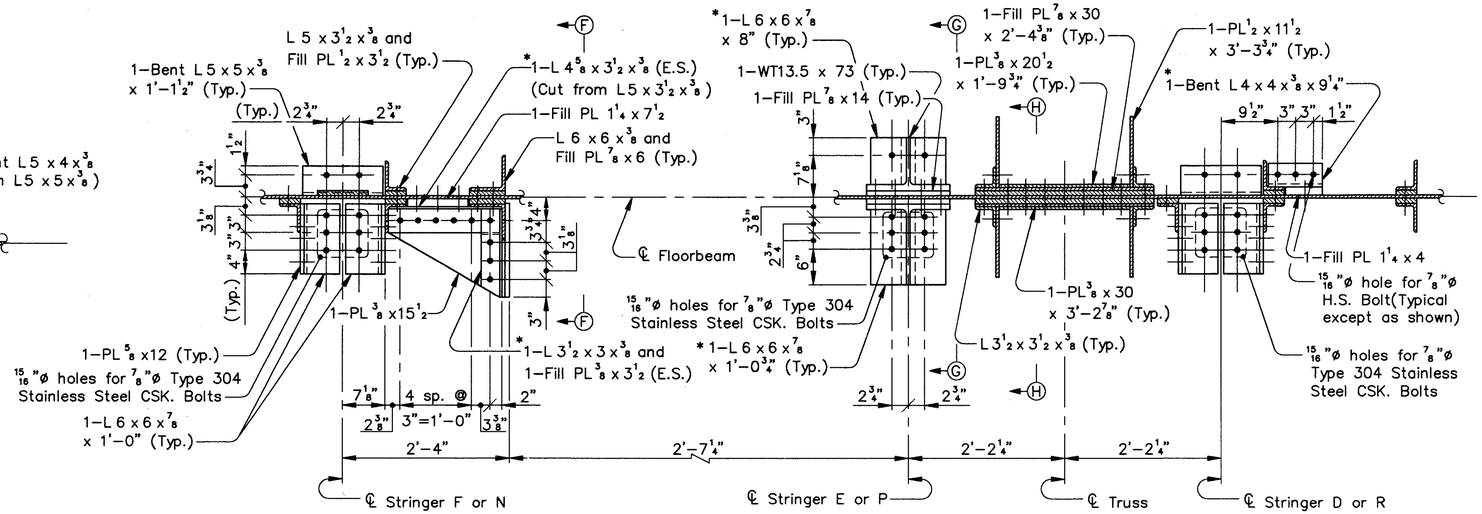

SECTION E–E
(Exp. Bearings not shown)

* Grind edge to fit fillet

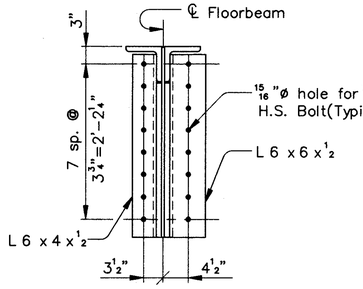

SECTION M–M

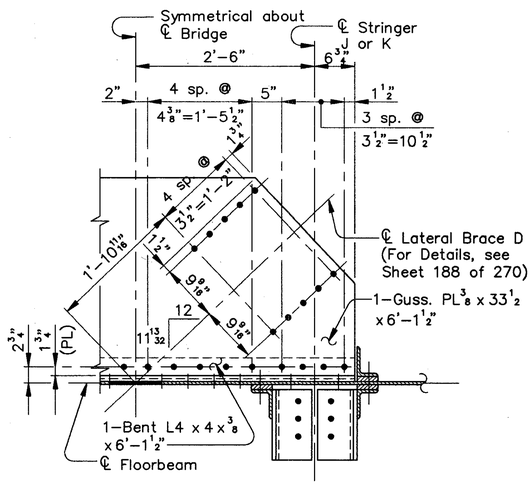

SECTION C–C
(Exp. Bearing not shown)

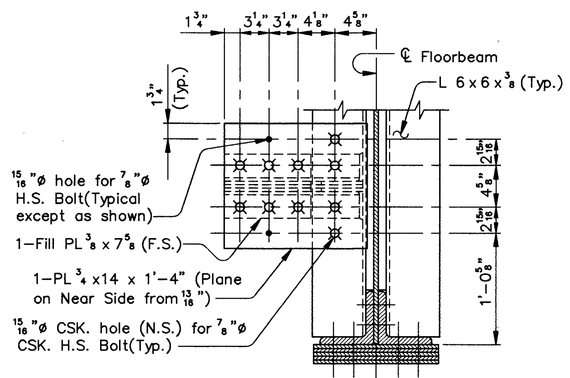

SECTION F–F

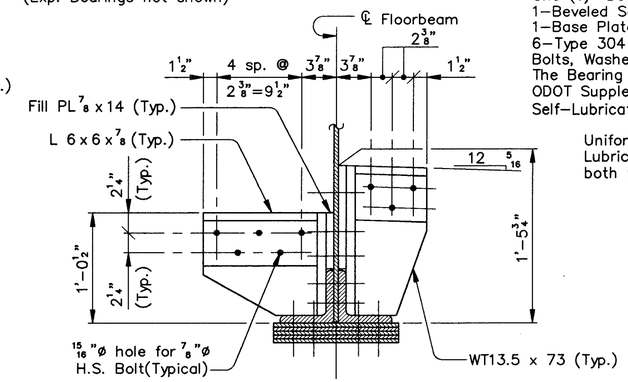

SECTION G–G
(Exp. Bearing not shown)

Uniform Pattern of Self-Lubricating recesses on both faces of the plate

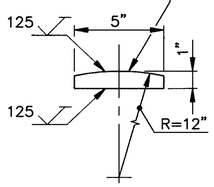

DETAIL N

Note:
One (1) "Bearing Device" shall consist of 1–Beveled Sole Plate, 1–Bronze Plate, 1–Base Plate, 1–Bearing Plate, and 6–Type 304 Stainless Steel Countersunk Bolts, Washers, Lock Washers, and Nuts. The Bearing Device shall conform with ODOT Supplemental Specification 927, Self–Lubricating Bronze Bearing Plates.

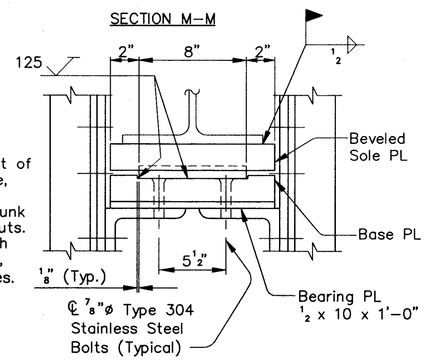

FRONT VIEW

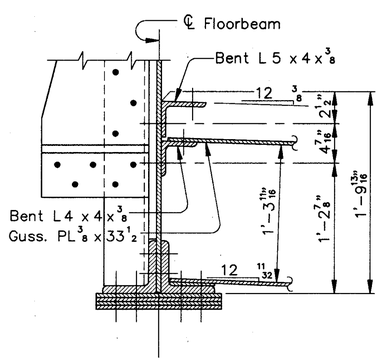

SECTION D–D
(Exp. Bearing not shown)

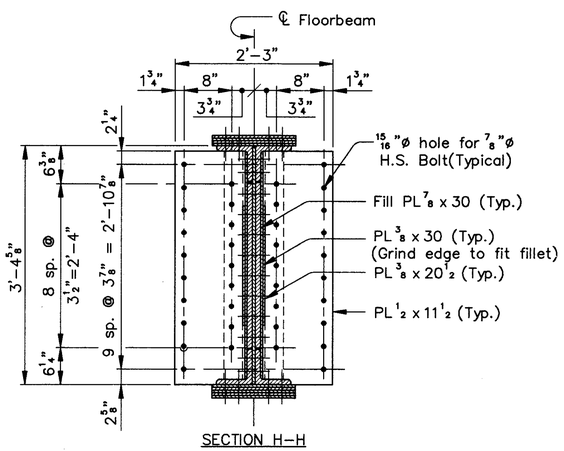

SECTION H–H

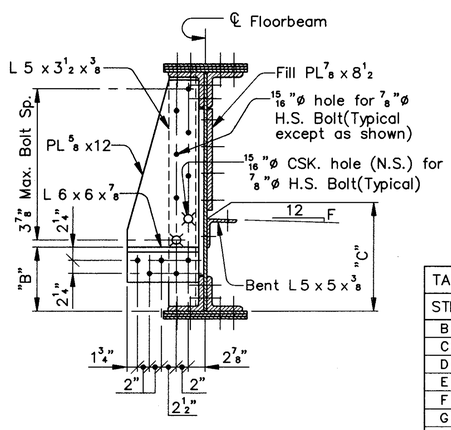

SECTION J–J
(Exp. Bearing not shown)

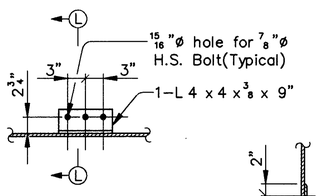

SECTION K–K

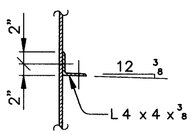

SECTION L–L

TABLE OF DIMENSIONS		
STRINGER	F	G
B and T	5/16	5/16
C and S	5/16	5/16
D and R	5/16	5/16
E and P	——	5/16
F and N	3/8	5/16
G and M	3/8	5/16
H and L	3/8	5/16
J and K	3/8	5/16

Notes:
For location of Sections B–B thru K–K and View M–M, see Sheet 128 of 270.
For Dimension "B" and "C" values, see Sheet 128 of 270.
(E.S.) denotes Each Side.
(N.S.) denotes Near Side.
(F.S.) denotes Far Side.

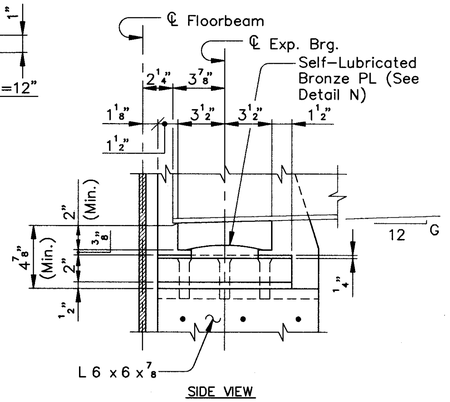

SIDE VIEW

EXPANSION BEARING

COUNTY BRIDGE NO. 84

HOWARD NEEDLES TAMMEN & BERGENDOFF
ARCHITECTS ENGINEERS PLANNERS
HNTB

UPPER DECK FLOORBEAM 5 AND 5' REPLACEMENT DETAILS
BR. NO. CUY – 6 – 1499
REHABILITATION OF
VETERANS MEMORIAL BRIDGE
(U.S. 6, 20, 42 & S.R. 3 OVER CUYAHOGA RIVER)

CLEVELAND CUYAHOGA COUNTY OHIO

DRAWN J.L.V.	TRACED J.L.V.	CHECKED A.D.Y.	REVIEWED C.A.B.	REVISED
DATE 11/13/93	DATE 11/13/93	DATE 11/23/93	DATE 4/05/94	SHEET 129/270

\11646\UDFB5B.DWG

FHWA REGION	STATE	PROJECT	
5	OHIO		

262/412

CUYAHOGA COUNTY
CUY – 6 – 14.99

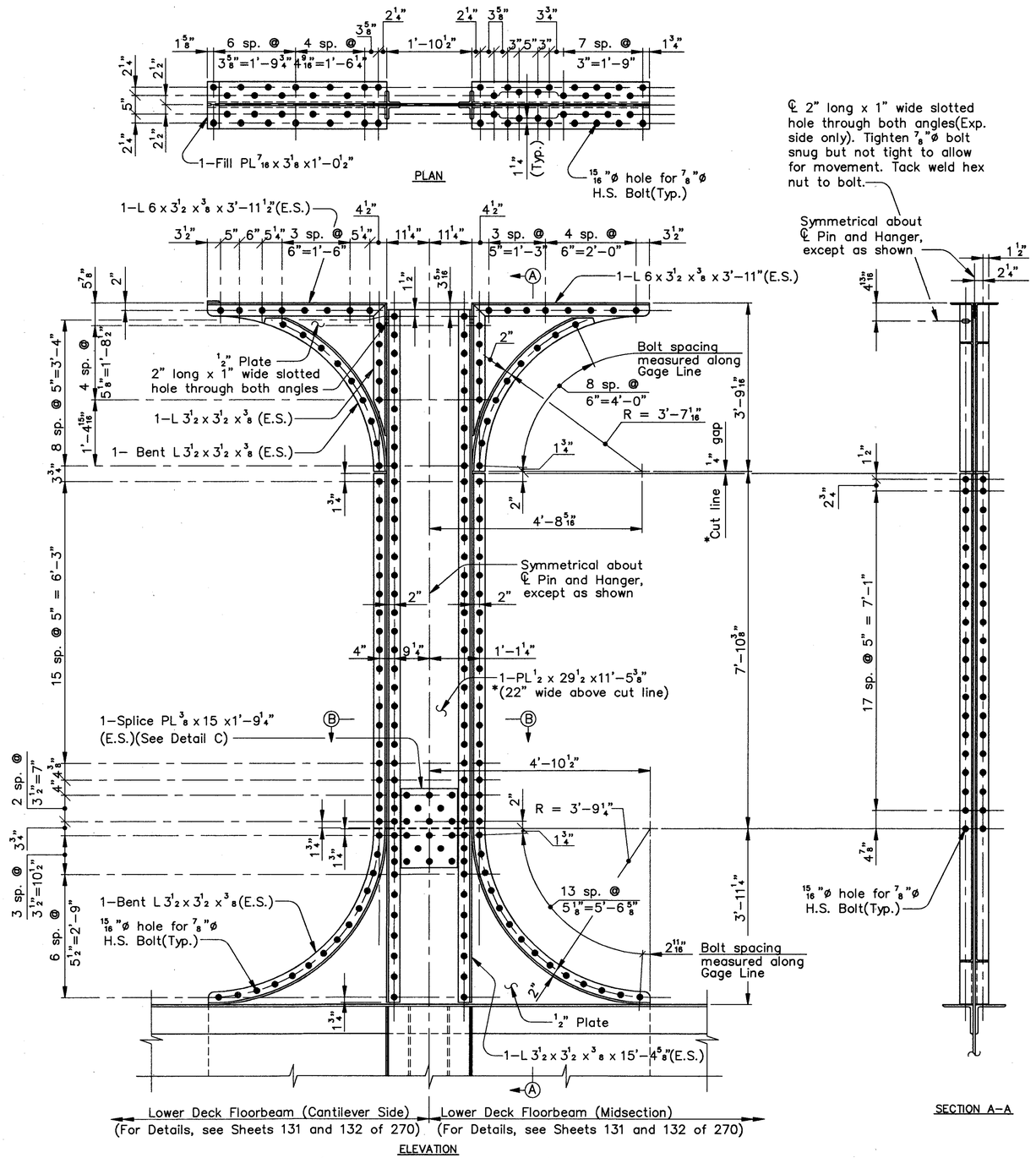

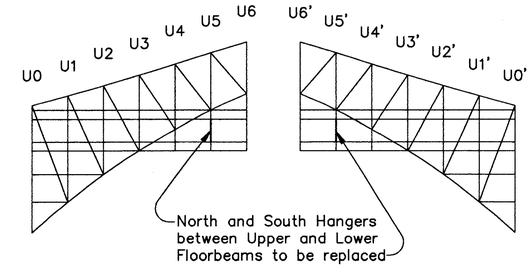

SCHEMATIC ELEVATION

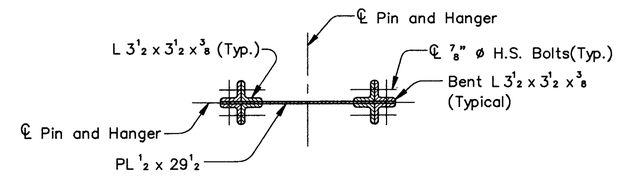

SECTION B–B

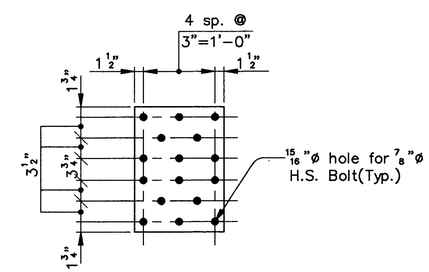

DETAIL C
(8 required)

Notes:
For Upper Deck Floorbeam details, see Sheets 128 and 129 of 270.
(E.S.) denotes Each Side.

COUNTY BRIDGE NO. 84

HOWARD NEEDLES TAMMEN & BERGENDOFF
ARCHITECTS ENGINEERS PLANNERS
HNTB

REPLACEMENT OF VERTICAL HANGERS AT FLOORBEAMS 5 AND 5'
BR. NO. CUY – 6 – 1499
REHABILITATION OF
VETERANS MEMORIAL BRIDGE
(U.S. 6, 20, 42 & S.R. 3 OVER CUYAHOGA RIVER)
CLEVELAND CUYAHOGA COUNTY OHIO

DRAWN	TRACED	CHECKED	REVIEWED	REVISED
J.L.V.	J.L.V.	A.D.Y.	C.A.B.	
DATE 9/29/93	DATE 9/29/93	DATE 11/18/93	DATE 4/05/94	SHEET 130/270

\11646\UDFB5C.DWG

FHWA REGION	STATE	PROJECT	
5	OHIO		

263/412

CUYAHOGA COUNTY
CUY – 6 – 14.99

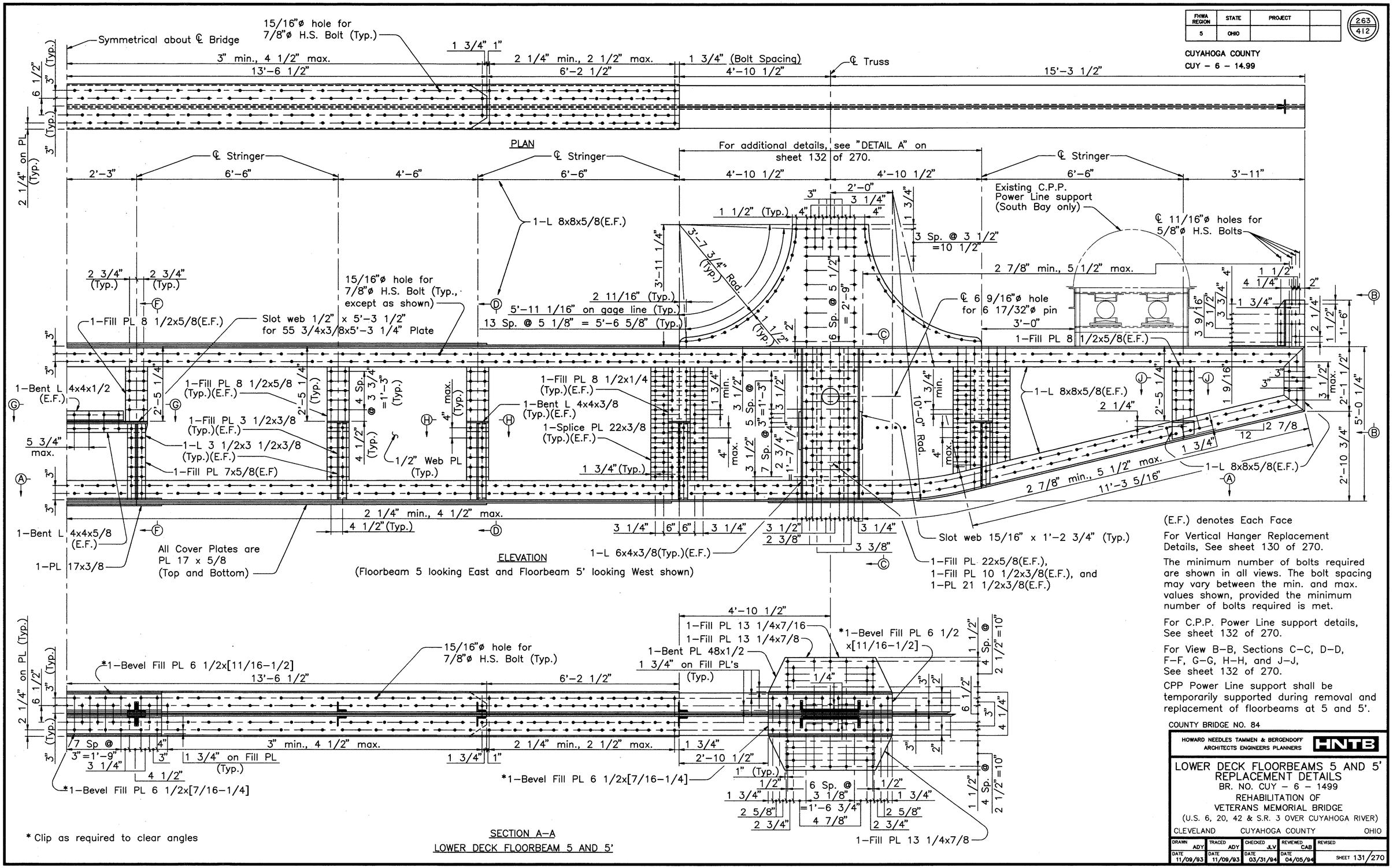

\11646\STEEL\1LDFB5

* Clip as required to clear angles

(E.F.) denotes Each Face

For Vertical Hanger Replacement Details, See sheet 130 of 270.

The minimum number of bolts required are shown in all views. The bolt spacing may vary between the min. and max. values shown, provided the minimum number of bolts required is met.

For C.P.P. Power Line support details, See sheet 132 of 270.

For View B–B, Sections C–C, D–D, F–F, G–G, H–H, and J–J, See sheet 132 of 270.

CPP Power Line support shall be temporarily supported during removal and replacement of floorbeams at 5 and 5'.

COUNTY BRIDGE NO. 84

HOWARD NEEDLES TAMMEN & BERGENDOFF
ARCHITECTS ENGINEERS PLANNERS
HNTB

LOWER DECK FLOORBEAMS 5 AND 5' REPLACEMENT DETAILS
BR. NO. CUY – 6 – 1499
REHABILITATION OF VETERANS MEMORIAL BRIDGE
(U.S. 6, 20, 42 & S.R. 3 OVER CUYAHOGA RIVER)
CLEVELAND CUYAHOGA COUNTY OHIO

DRAWN	TRACED	CHECKED	REVIEWED	REVISED
ADY	ADY	JLV	CAB	
DATE 11/09/93	DATE 11/09/93	DATE 03/31/94	DATE 04/05/94	SHEET 131/270

FHWA REGION	STATE	PROJECT	
5	OHIO		

264/412

CUYAHOGA COUNTY
CUY – 6 – 14.99

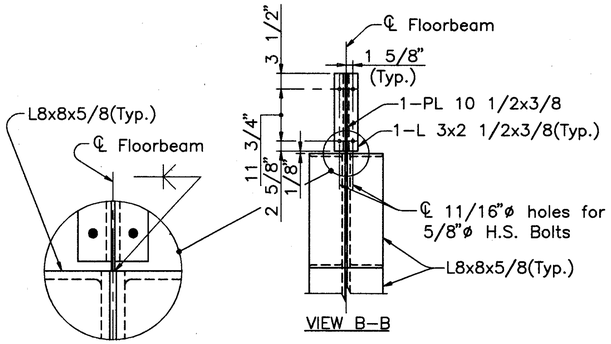

VIEW B–B

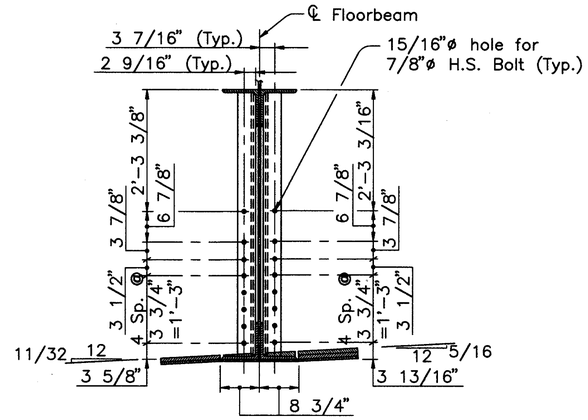

SECTION C–C

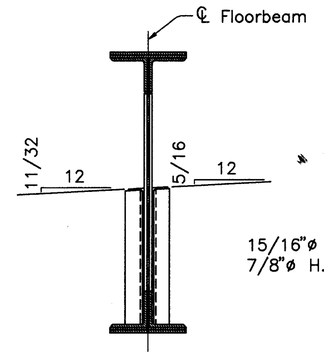

SECTION D–D

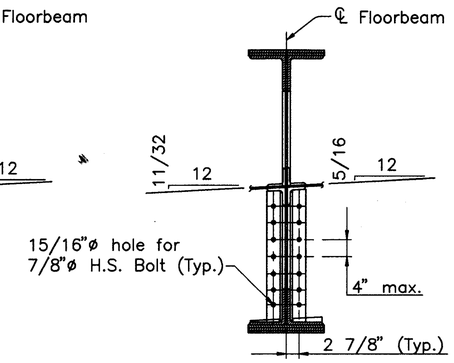

SECTION F–F

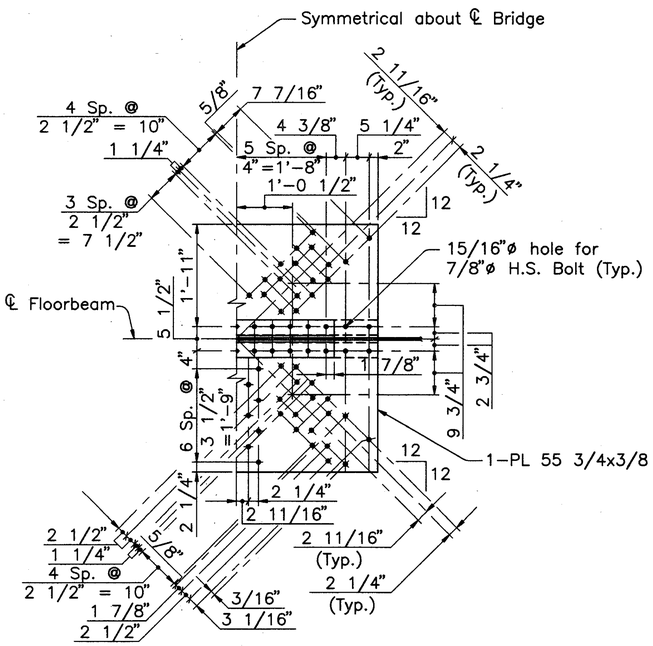

SECTION G–G

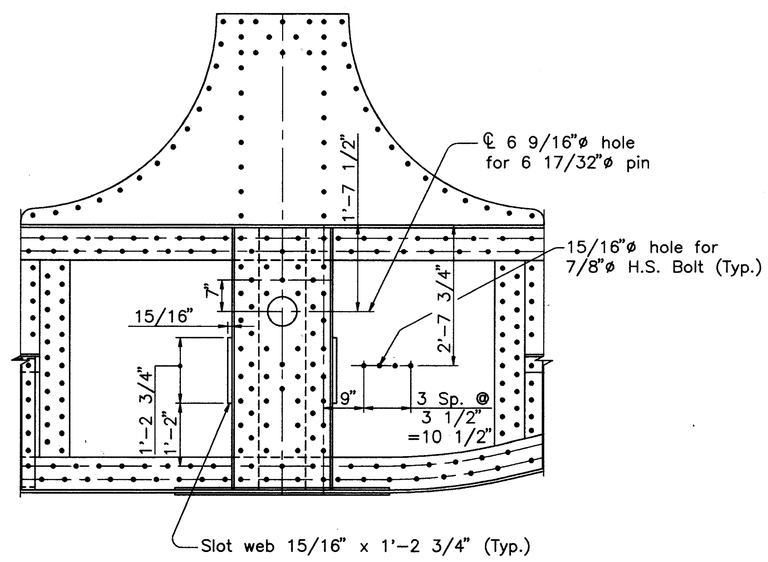

DETAIL A

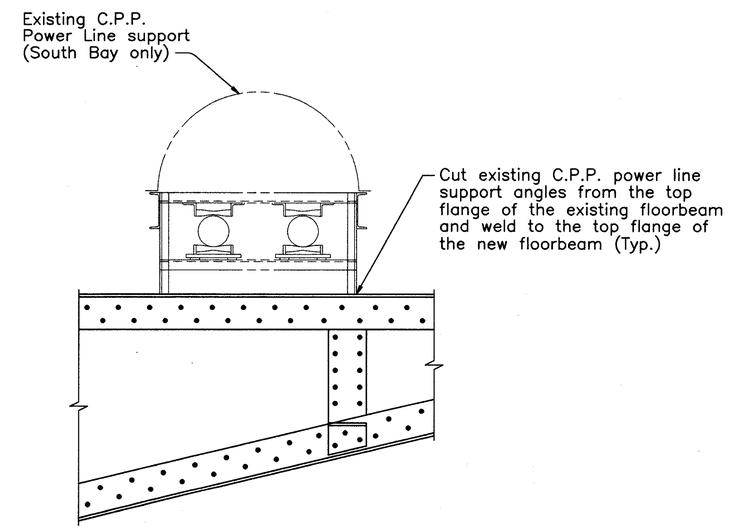

C.P.P. POWER LINE SUPPORT DETAIL AT FLOORBEAMS 5 AND 5'

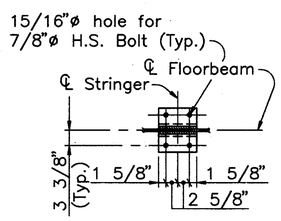

SECTION H–H

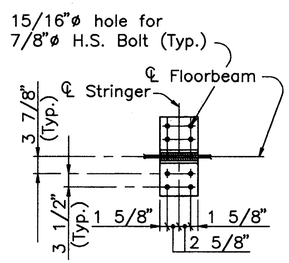

SECTION J–J

NOTES:
For location of View B–B, Sections C–C, D–D, F–F, G–G, H–H, and J–J, see sheet 131 of 270.

For additional notes, see sheet 131 of 270.

COUNTY BRIDGE NO. 84

HOWARD NEEDLES TAMMEN & BERGENDOFF
ARCHITECTS ENGINEERS PLANNERS
HNTB

LOWER DECK FLOORBEAMS 5 AND 5' REPLACEMENT DETAILS
BR. NO. CUY – 6 – 1499
REHABILITATION OF
VETERANS MEMORIAL BRIDGE
(U.S. 6, 20, 42 & S.R. 3 OVER CUYAHOGA RIVER)

CLEVELAND CUYAHOGA COUNTY OHIO

DRAWN	TRACED	CHECKED	REVIEWED	REVISED
ADY	ADY	JLV	CAB	
DATE 09/15/93	DATE 09/15/93	DATE 03/31/94	DATE 04/05/94	SHEET 132/270

\11646\STEEL\2LDFB5

FHWA REGION	STATE	PROJECT	
5	OHIO		

265/412

CUYAHOGA COUNTY
CUY – 6 – 14.99

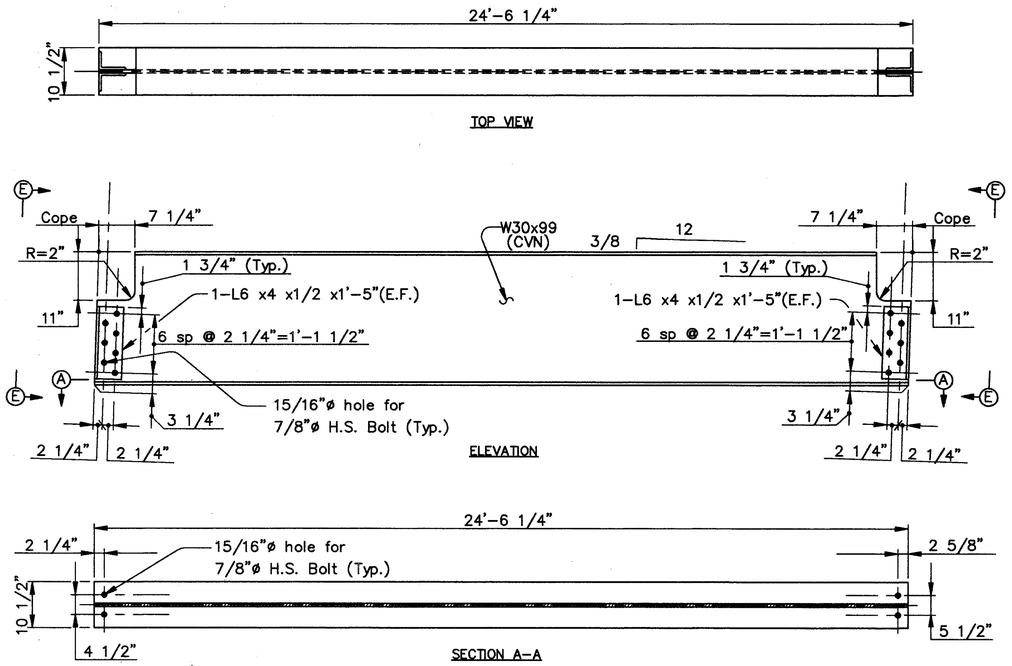

STRINGER US8 (as shown)
(16 Required)

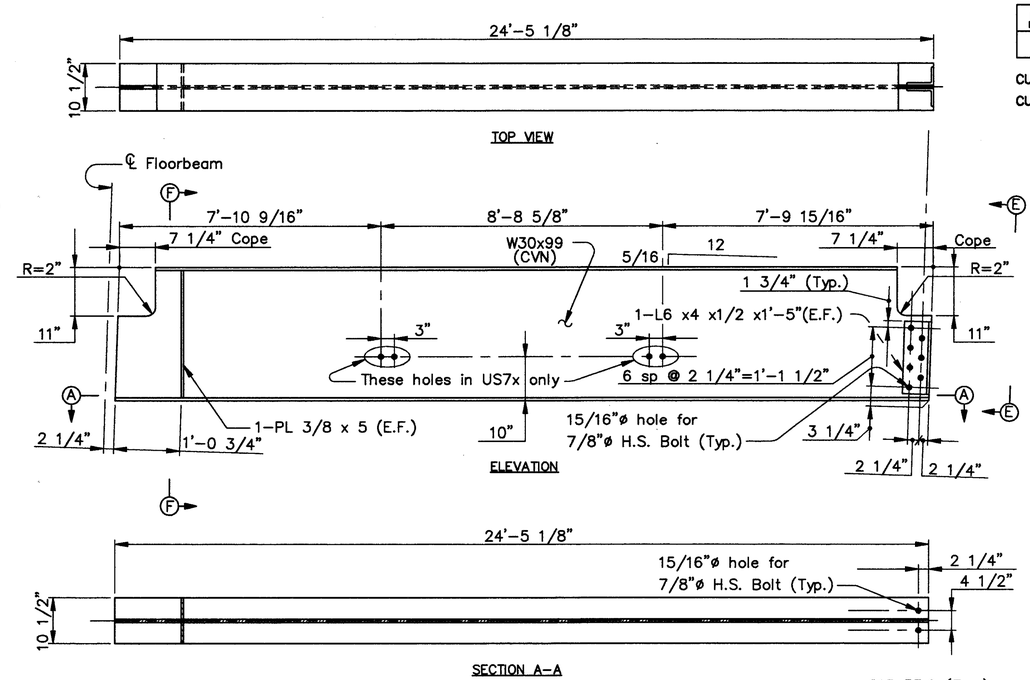

STRINGER US7 (as shown)
(12 Required)

STRINGER US7x (as shown)
(4 Required)

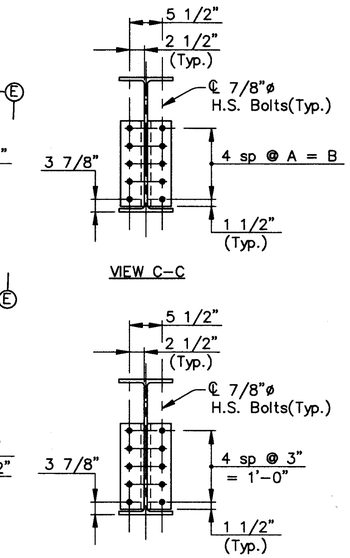

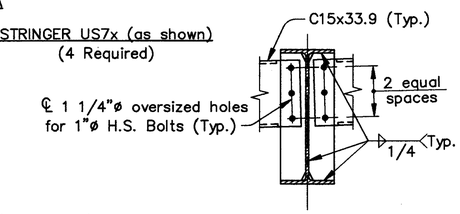

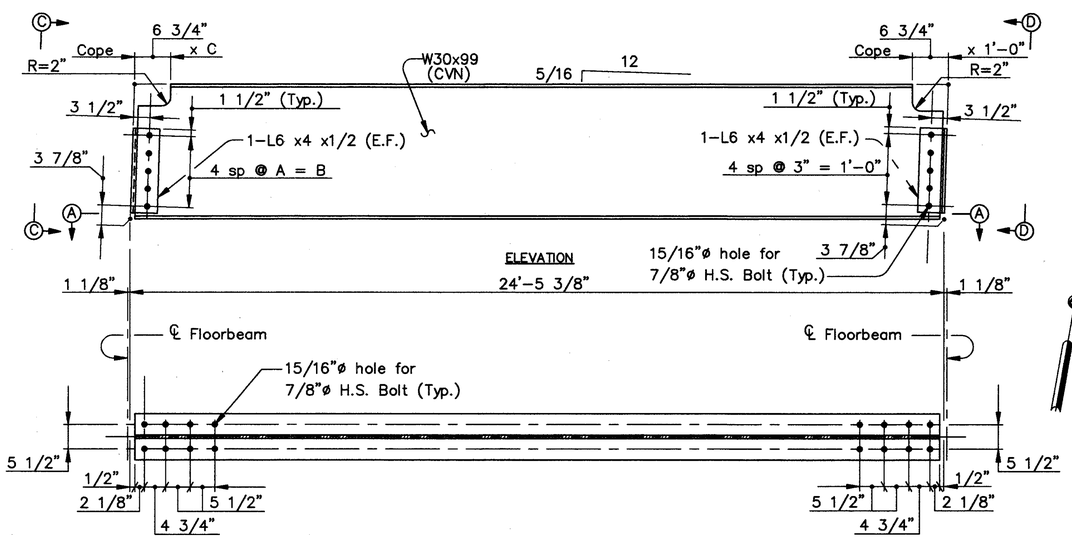

STRINGER 63B5R (as shown)
(1 Required)

STRINGER 63B5L (opp. hand)
(1 Required)

STRINGER 63B6R (as shown)
(1 Required)

STRINGER 63B6L (opp. hand)
(1 Required)

TABLE OF DIMENSIONS			
STRINGER	A	B	C
63B5	4"	1'–4"	3 1/2"
63B6	3 1/2"	1'–2"	5 1/2"

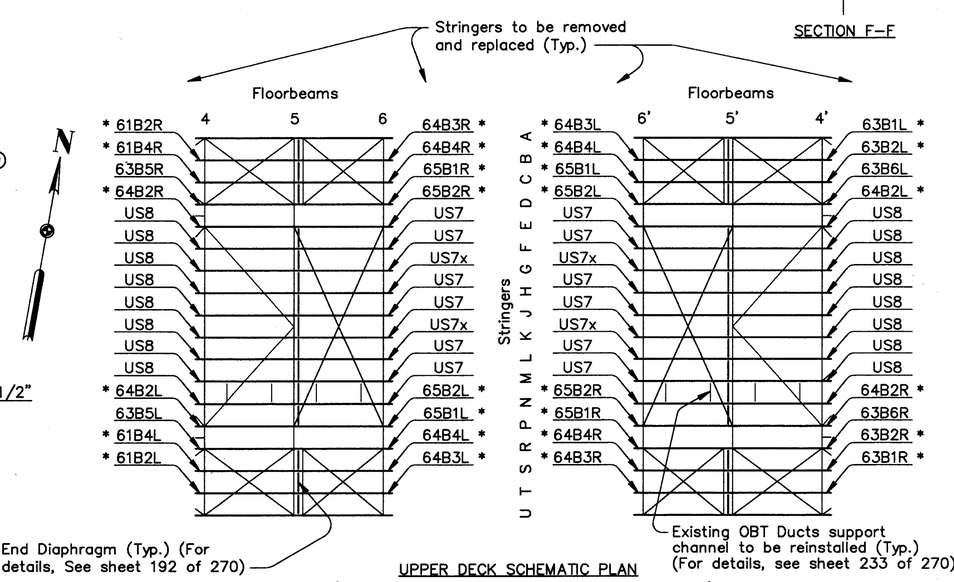

UPPER DECK SCHEMATIC PLAN
(* – For details, See sheet 134 or 135 of 270)

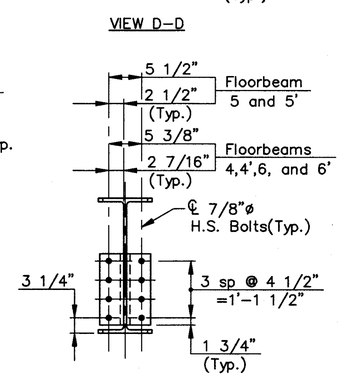

Notes:

(E.F.) denotes Each Face

For Welded Stud Shear Connector details, see sheet 192 of 270.

All material designated 'CVN' shall meet the notch toughness requirements as set forth in ODOT CMS section 711.01.

COUNTY BRIDGE NO. 84

HOWARD NEEDLES TAMMEN & BERGENDOFF
ARCHITECTS ENGINEERS PLANNERS
HNTB

REPLACEMENT–UPPER DECK STRINGERS
BR. NO. CUY – 6 – 1499
REHABILITATION OF
VETERANS MEMORIAL BRIDGE
(U.S. 6, 20, 42 & S.R. 3 OVER CUYAHOGA RIVER)
CLEVELAND CUYAHOGA COUNTY OHIO

DRAWN ADY	TRACED ADY	CHECKED JLV	REVIEWED CAB	REVISED
DATE 7/15/93	DATE 7/15/93	DATE 11/23/93	DATE 04/05/94	SHEET 133/270

\11646\STEEL\UDSTR1

FHWA REGION	STATE	PROJECT	
5	OHIO		

CUYAHOGA COUNTY
CUY – 6 – 14.99

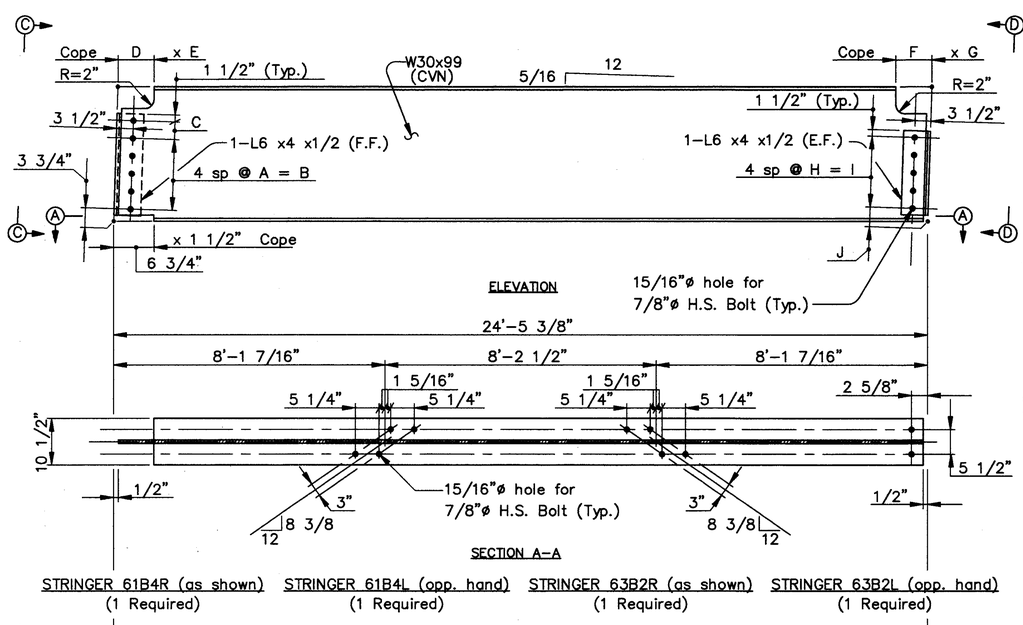

STRINGER 61B4R (as shown) (1 Required) STRINGER 61B4L (opp. hand) (1 Required) STRINGER 63B2R (as shown) (1 Required) STRINGER 63B2L (opp. hand) (1 Required)

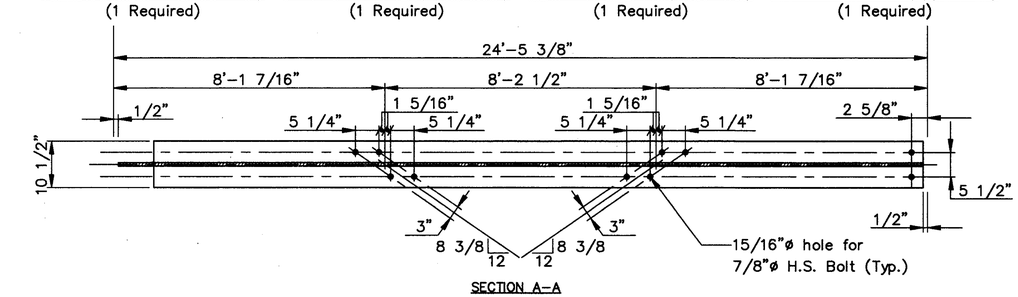

STRINGER 61B2R (as shown) (1 Required) STRINGER 61B2L (opp. hand) (1 Required) STRINGER 63B1R (as shown) (1 Required) STRINGER 63B1L (opp. hand) (1 Required)

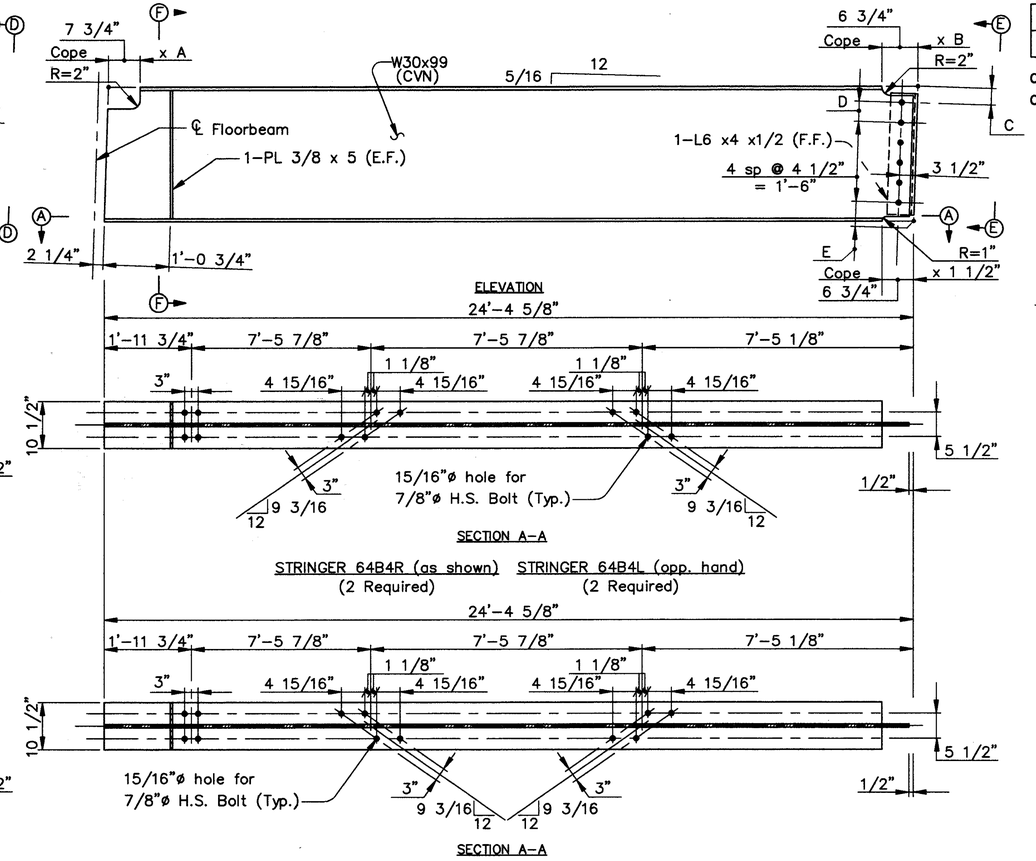

STRINGER 64B4R (as shown) (2 Required) STRINGER 64B4L (opp. hand) (2 Required)

STRINGER 64B3R (as shown) (2 Required) STRINGER 64B3L (opp. hand) (2 Required)

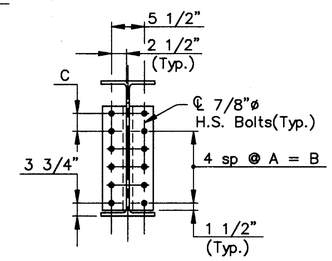

VIEW C–C

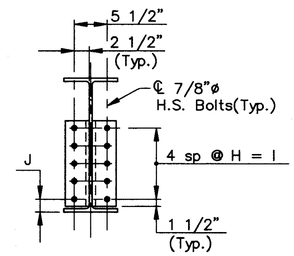

VIEW D–D

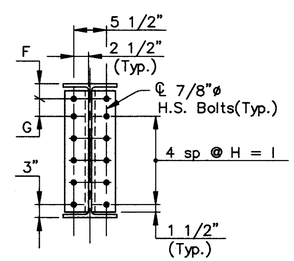

VIEW E–E

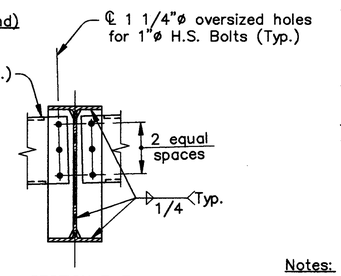

SECTION F–F

TABLE OF DIMENSIONS										
STRINGER	A	B	C	D	E	F	G	H	I	J
61B2	4 1/2"	1'–6"	3 3/16"	6"	1 1/2"	6"	9 1/2"	3 3/4"	1'–3"	3 1/8"
61B4	4 1/4"	1'–5"	3 1/4"	6 3/4"	2 1/2"	6 3/4"	10 3/4"	3 1/2"	1'–2"	3"
63B1	4"	1'–4"	3 3/16"	6"	3 1/2"	6"	9 1/2"	3 3/4"	1'–3"	3 1/8"
63B2	3 3/4"	1'–3"	3 1/4"	6 3/4"	4 1/2"	6 3/4"	10 1/2"	3 1/2"	1'–2"	3"
64B4	9"	2 1/2"	5 3/8"	3 1/4"	3"	5 3/8"	3 1/4"	4 1/2"	1'–6"	–
64B3	8"	1 1/2"	3"	4 1/2"	4 1/8"	2 7/16"	5 3/16"	4 3/4"	1'–7"	–

Note:
All material designated 'CVN' shall meet the notch toughness requirements as set forth in ODOT CMS section 711.01.

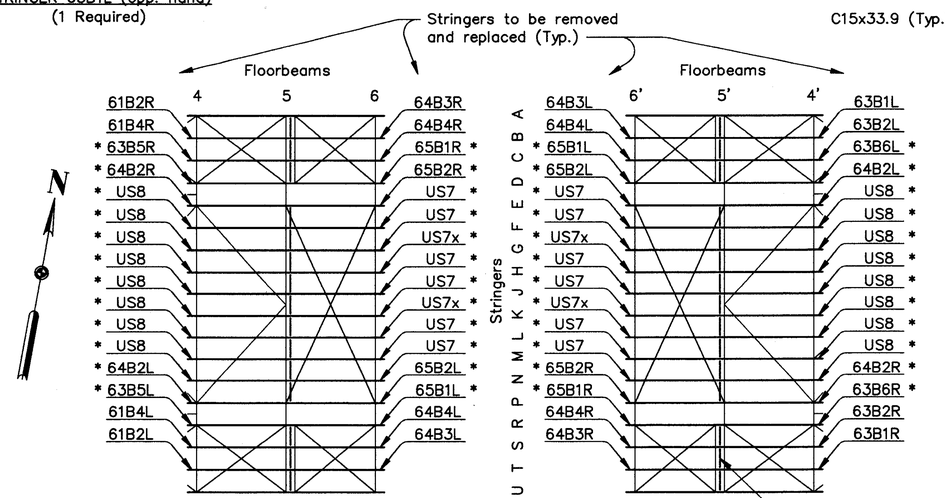

UPPER DECK SCHEMATIC PLAN
(* – For details, See sheet 133 or 135 of 270)

End Diaphragm (Typ.) (For details, See sheet 192 of 270)

Notes:
(E.F.) denotes Each Face
(F.F.) denotes Far Face

For Welded Stud Shear Connector details, see sheet 192 of 270.

COUNTY BRIDGE NO. 84

HOWARD NEEDLES TAMMEN & BERGENDOFF
ARCHITECTS ENGINEERS PLANNERS
HNTB

REPLACEMENT–UPPER DECK STRINGERS
BR. NO. CUY – 6 – 1499
REHABILITATION OF
VETERANS MEMORIAL BRIDGE
(U.S. 6, 20, 42 & S.R. 3 OVER CUYAHOGA RIVER)
CLEVELAND CUYAHOGA COUNTY OHIO

DRAWN ADY	TRACED ADY	CHECKED JLV	REVIEWED CAB	REVISED
DATE 7/20/93	DATE 7/20/93	DATE 11/18/93	DATE 04/05/94	SHEET 134/270

\11646\STEEL\UDSTR2

FHWA REGION	STATE	PROJECT	
5	OHIO		

267/412

CUYAHOGA COUNTY
CUY - 6 - 14.99

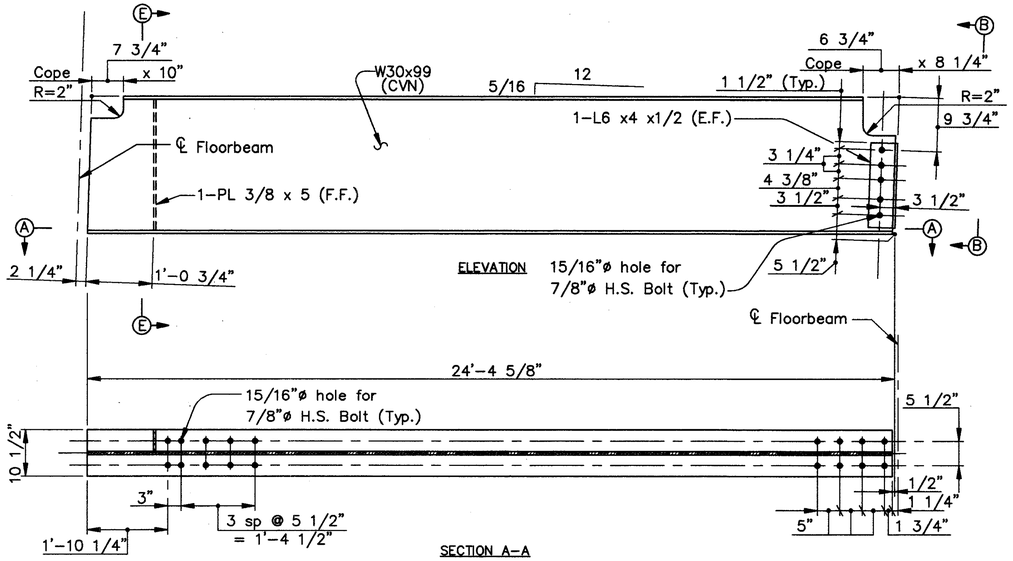

STRINGER 65B1R (as shown) (2 Required) STRINGER 65B1L (opp. hand) (2 Required)

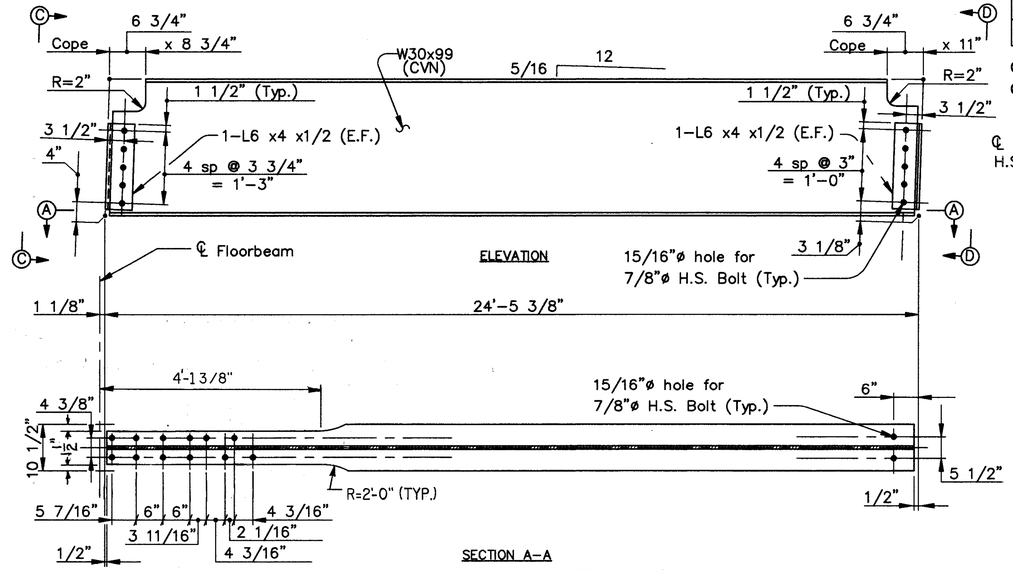

STRINGER 64B2R (as shown) (2 Required) STRINGER 64B2L (opp. hand) (2 Required)

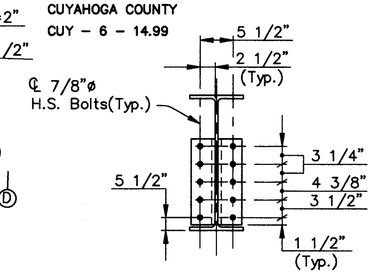

VIEW B-B

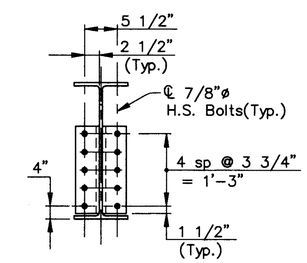

VIEW C-C

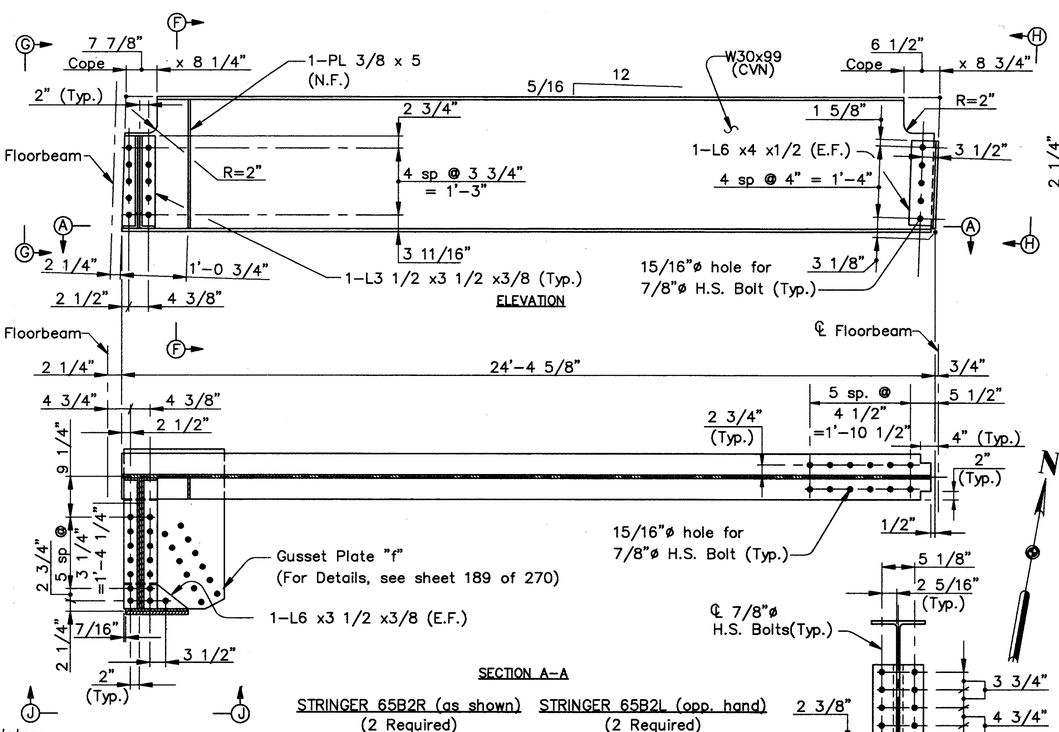

STRINGER 65B2R (as shown) (2 Required) STRINGER 65B2L (opp. hand) (2 Required)

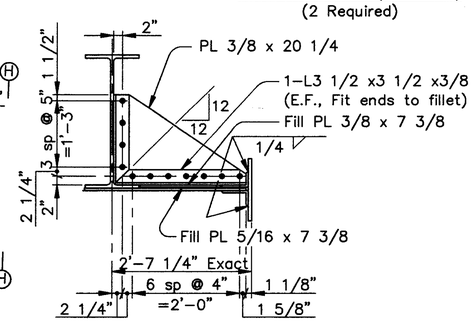

VIEW G-G

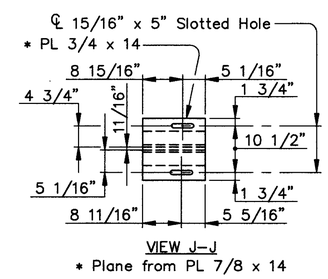

VIEW J-J
* Plane from PL 7/8 x 14

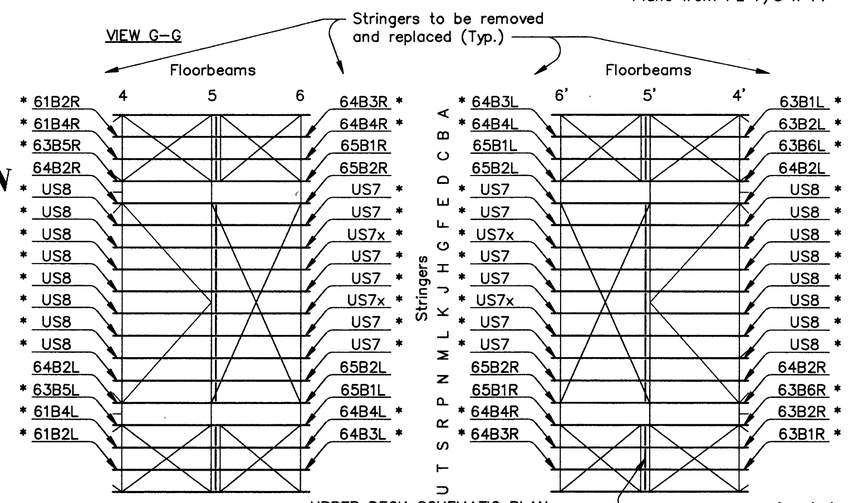

UPPER DECK SCHEMATIC PLAN
(* - For details, See sheet 133 or 134 of 270)
End Diaphragm (Typ.) (For details, See sheet 192 of 270)

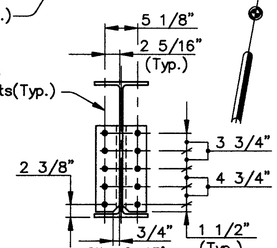

VIEW H-H

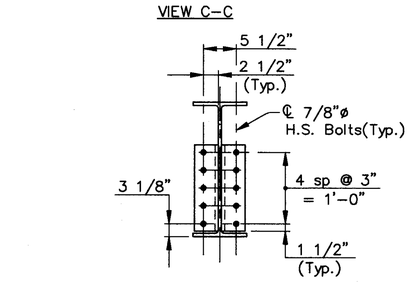

VIEW D-D

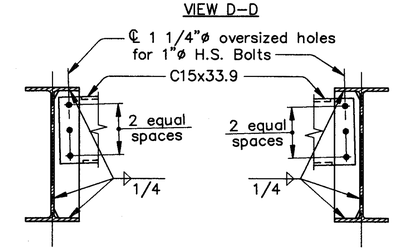

SECTION F-F SECTION E-E

Notes:
(E.F.) denotes Each Face
(N.F.) denotes Near Face
(F.F.) denotes Far Face

For Welded Stud Shear Connector details, see sheet 192 of 270.

Note:
All material designated 'CVN' shall meet the notch toughness requirements as set forth in ODOT CMS section 711.01.

COUNTY BRIDGE NO. 84

HOWARD NEEDLES TAMMEN & BERGENDOFF
ARCHITECTS ENGINEERS PLANNERS
HNTB

REPLACEMENT-UPPER DECK STRINGERS
BR. NO. CUY - 6 - 1499
REHABILITATION OF
VETERANS MEMORIAL BRIDGE
(U.S. 6, 20, 42 & S.R. 3 OVER CUYAHOGA RIVER)
CLEVELAND CUYAHOGA COUNTY OHIO

DRAWN ADY	TRACED ADY	CHECKED JLV	REVIEWED CAB	REVISED
DATE 7/23/93	DATE 7/23/93	DATE 11/23/93	DATE 04/05/94	SHEET 135/270

\11646\STEEL\UDSTR3

FHWA REGION	STATE	PROJECT	
5	OHIO		

268 / 412

CUYAHOGA COUNTY
CUY – 6 – 14.99

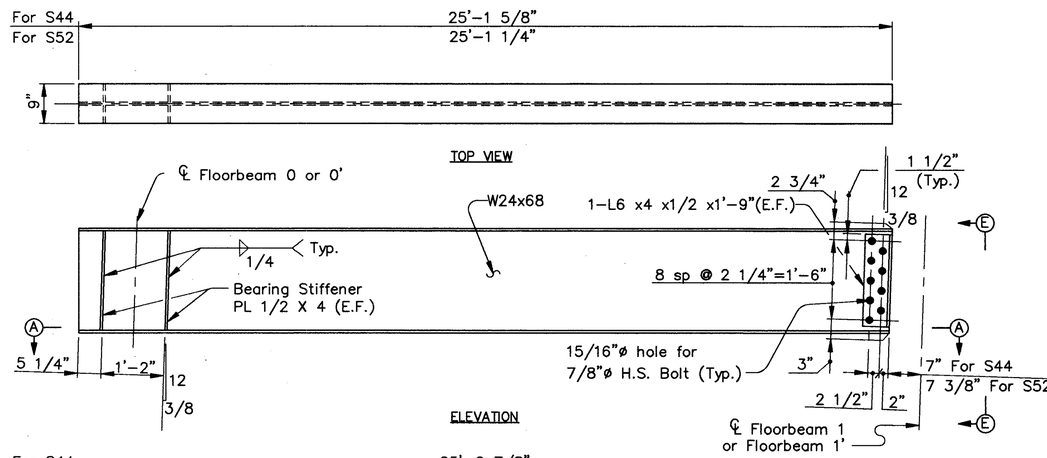

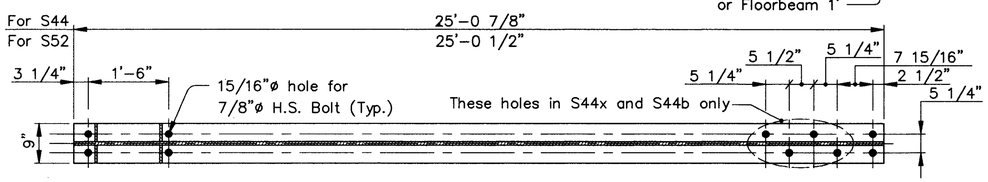

STRINGER S44 (as shown and noted)
(8 Required)
STRINGER S44x (as shown and noted)
(2 Required)

SECTION A–A

STRINGER S44b (opp. hand to S44x)
(2 Required)
STRINGER S52 (as shown and noted)
(4 Required)

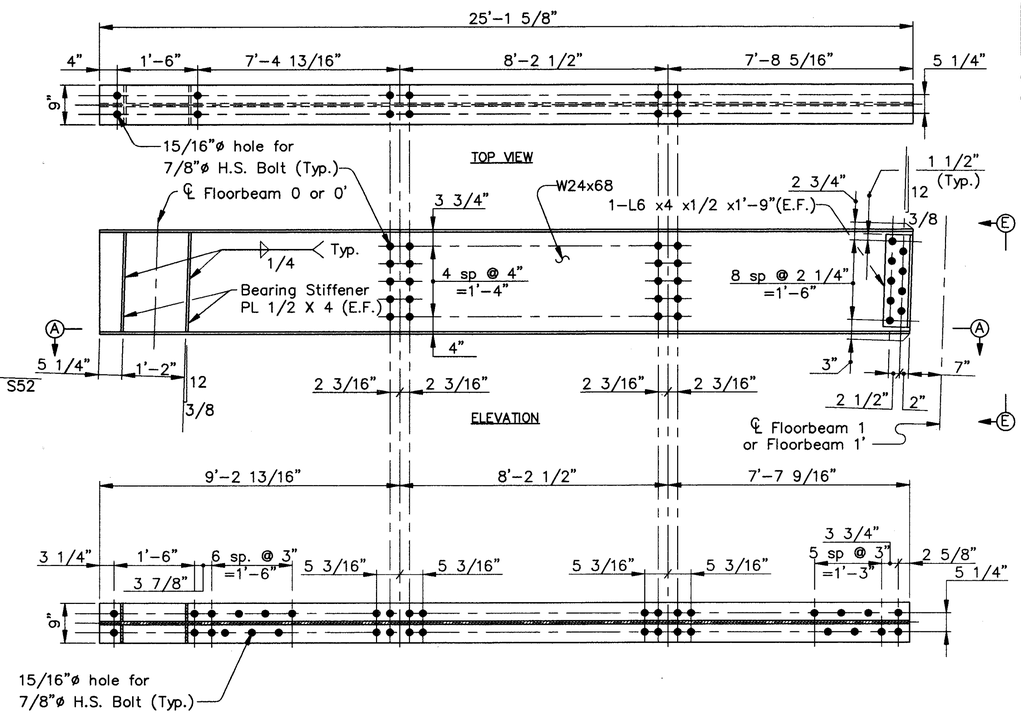

STRINGER S46R (as shown)
(2 Required)

SECTION A–A

STRINGER S46L (opp. hand)
(2 Required)

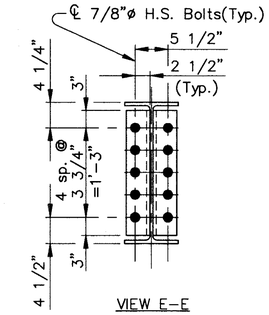

VIEW E–E

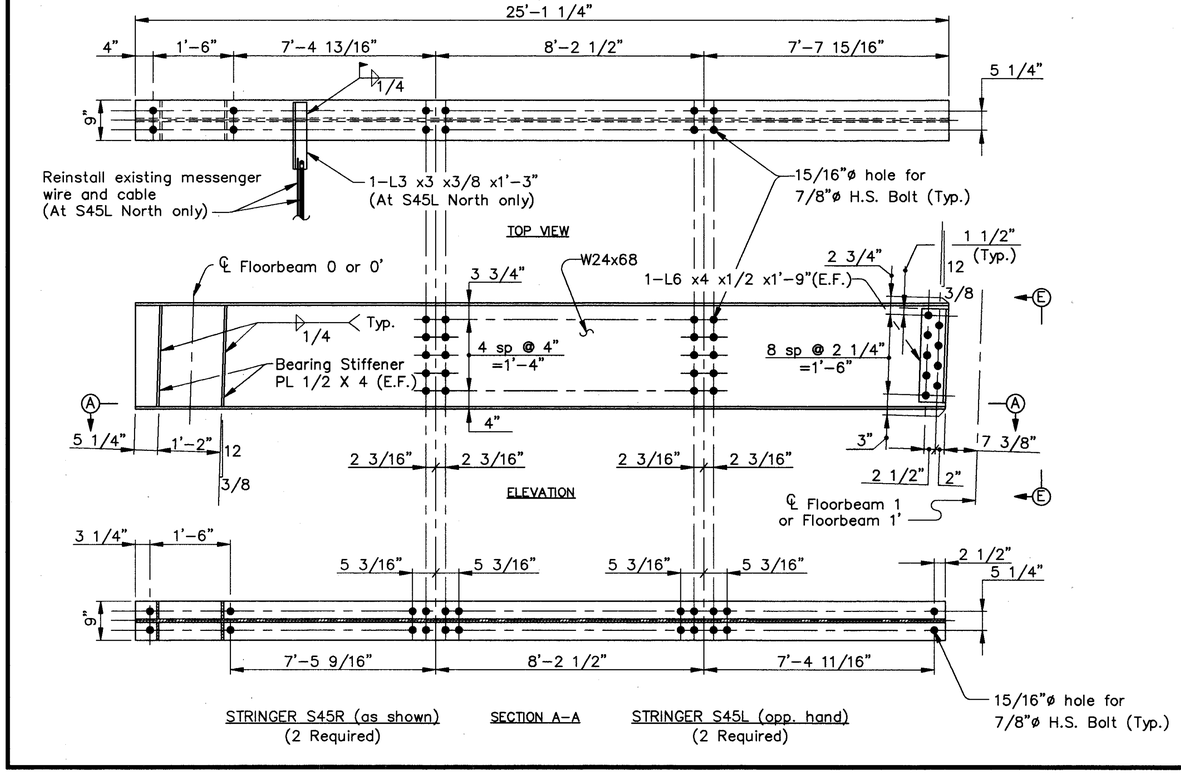

STRINGER S45R (as shown)
(2 Required)

SECTION A–A

STRINGER S45L (opp. hand)
(2 Required)

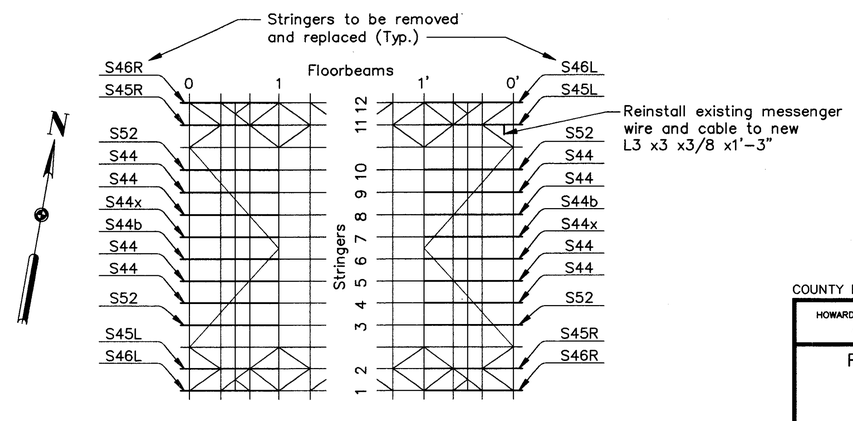

LOWER DECK SCHEMATIC PLAN

COUNTY BRIDGE NO. 84

HOWARD NEEDLES TAMMEN & BERGENDOFF
ARCHITECTS ENGINEERS PLANNERS
HNTB

REPLACEMENT–LOWER DECK
STRINGERS
BR. NO. CUY – 6 – 1499
REHABILITATION OF
VETERANS MEMORIAL BRIDGE
(U.S. 6, 20, 42 & S.R. 3 OVER CUYAHOGA RIVER)

CLEVELAND CUYAHOGA COUNTY OHIO

DRAWN ADY	TRACED ADY	CHECKED JLV	REVIEWED CAB	REVISED
DATE 7/09/93	DATE 7/09/93	DATE 12/01/93	DATE 04/05/94	SHEET 136/270

\11646\STEEL\LDSTR1

FHWA REGION	STATE	PROJECT	
5	OHIO		

269/412

CUYAHOGA COUNTY
CUY – 6 – 14.99

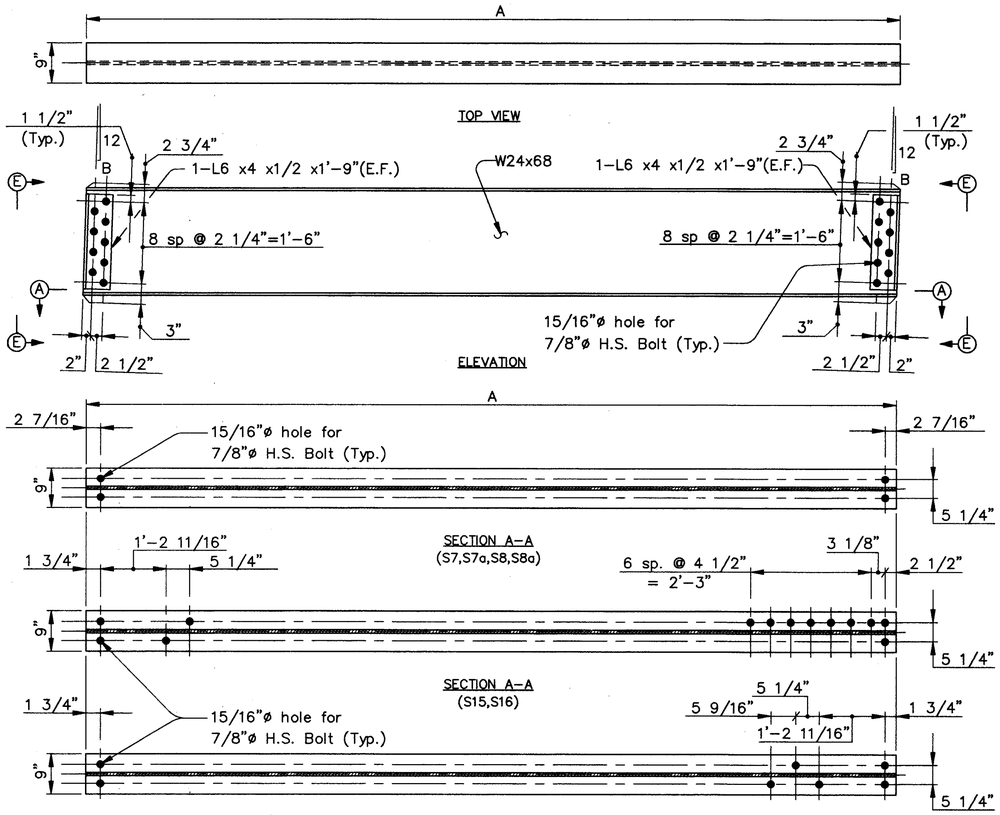

STRINGER S7 (as shown and noted) (8 Required)
STRINGER S7a (as shown and noted) (4 Required)
STRINGER S15 (as shown and noted) (2 Required)
STRINGER S8 (as shown and noted) (8 Required)
STRINGER S8a (as shown and noted) (4 Required)
STRINGER S16 (opp. hand to S15) (2 Required)
STRINGER S17 (as shown and noted) (2 Required)
STRINGER S18 (opp. hand to S17) (2 Required)

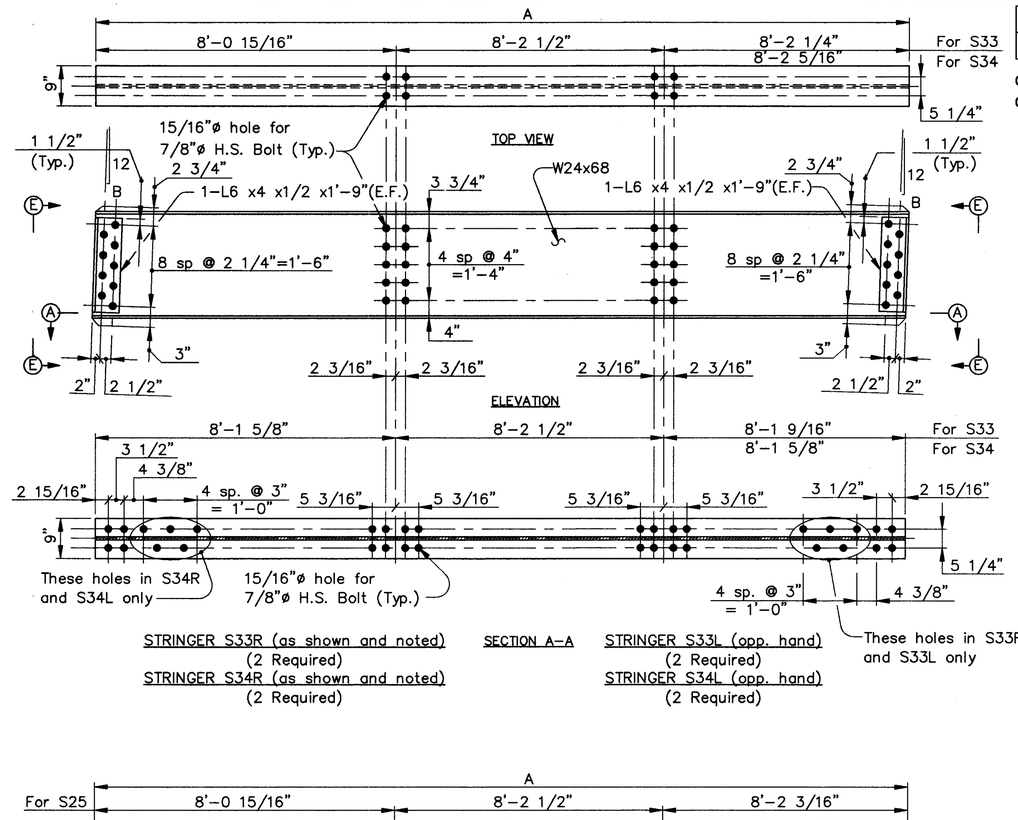

STRINGER S33R (as shown and noted) (2 Required)
STRINGER S34R (as shown and noted) (2 Required)
STRINGER S33L (opp. hand) (2 Required)
STRINGER S34L (opp. hand) (2 Required)

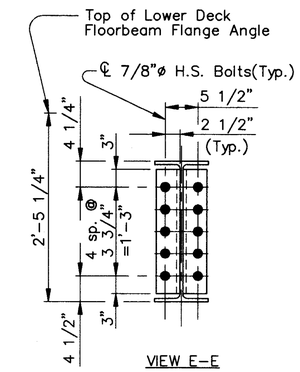

DIMENSION TABLE		
STRINGER	A	B
S7	24'–5 11/16"	5/16
S7a	24'–5 9/16"	5/16
S8	24'–5 3/4"	11/32
S8a	24'–5 5/8"	11/32
S15,S16	24'–5 3/4"	5/16
S17,S18	24'–5 3/4"	11/32
S25	24'–5 5/8"	5/16
S26	24'–5 5/8"	11/32
S33	24'–5 11/16"	5/16
S34	24'–5 3/4"	11/32

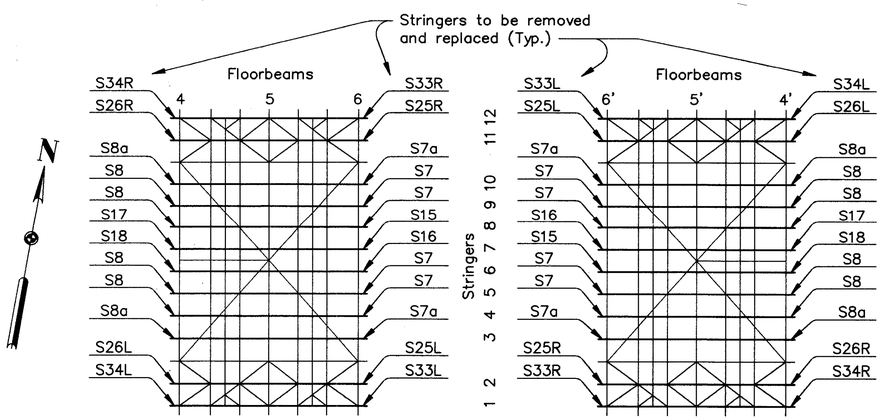

LOWER DECK SCHEMATIC PLAN

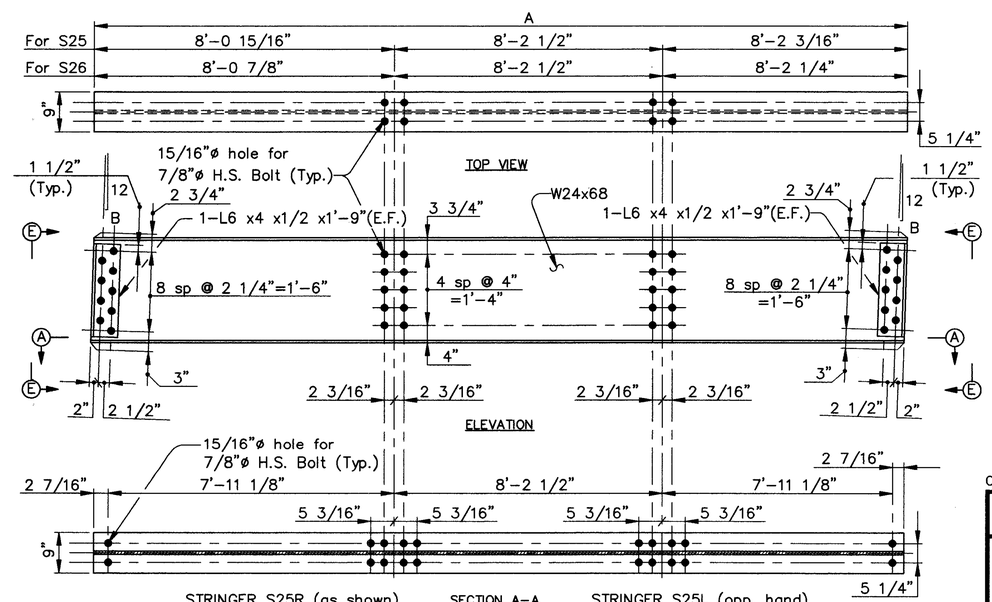

STRINGER S25R (as shown) (2 Required)
STRINGER S26R (as shown) (2 Required)
STRINGER S25L (opp. hand) (2 Required)
STRINGER S26L (opp. hand) (2 Required)

COUNTY BRIDGE NO. 84

HOWARD NEEDLES TAMMEN & BERGENDOFF
ARCHITECTS ENGINEERS PLANNERS
HNTB

REPLACEMENT–LOWER DECK STRINGERS
BR. NO. CUY – 6 – 1499
REHABILITATION OF
VETERANS MEMORIAL BRIDGE
(U.S. 6, 20, 42 & S.R. 3 OVER CUYAHOGA RIVER)

CLEVELAND CUYAHOGA COUNTY OHIO

DRAWN	TRACED	CHECKED	REVIEWED	REVISED
ADY	ADY	JLV	CAB	
DATE 7/13/93	DATE 7/13/93	DATE 12/01/93	DATE 04/05/94	SHEET 137/270

\11646\STEEL\LDSTR2

FHWA REGION	STATE	PROJECT	
5	OHIO		

270/412

CUYAHOGA COUNTY
CUY – 6 – 14.99

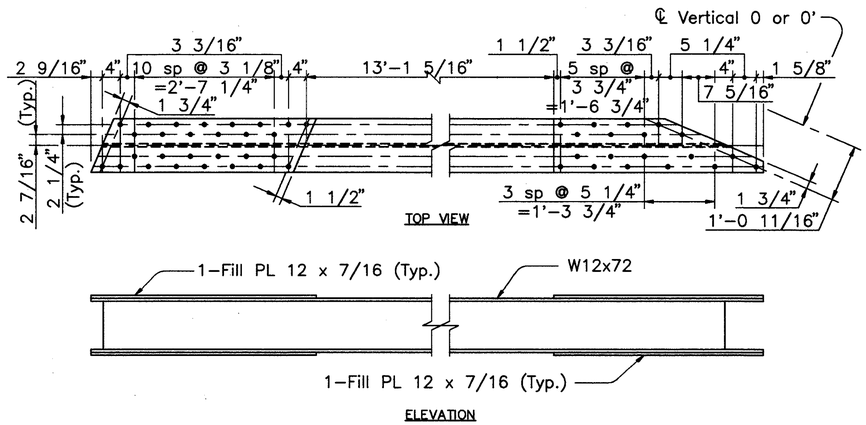

AB53
(4 Required)

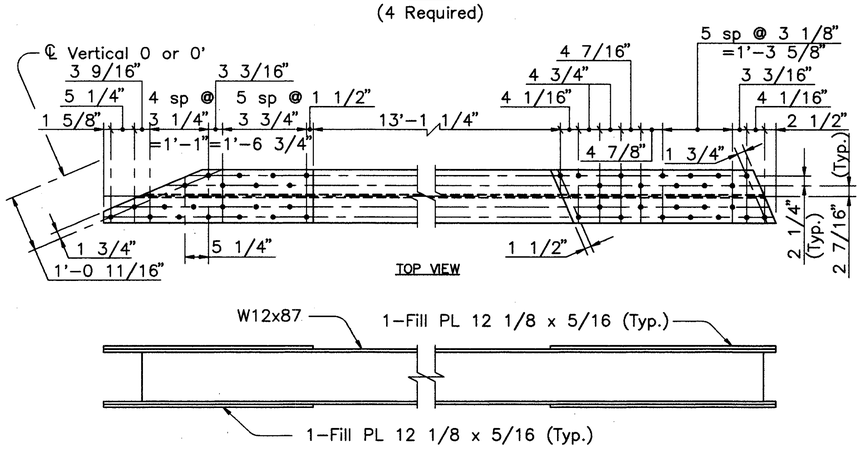

AB54
(4 Required)

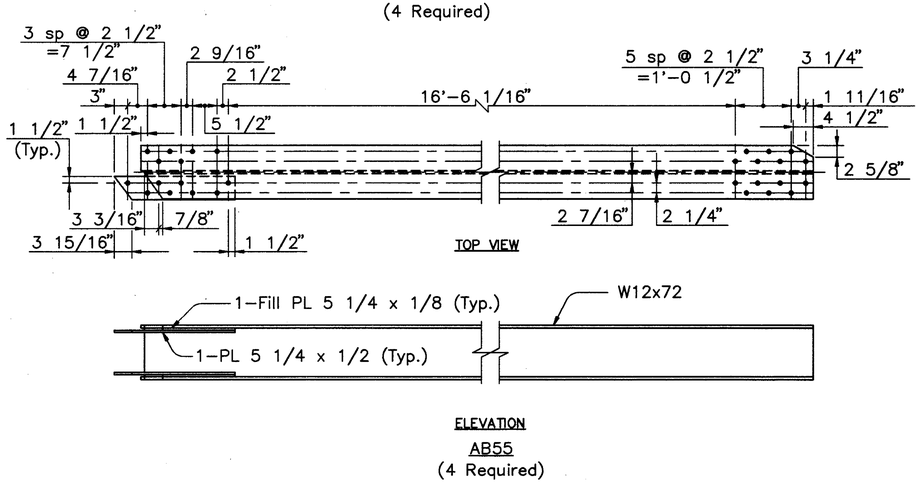

AB55
(4 Required)

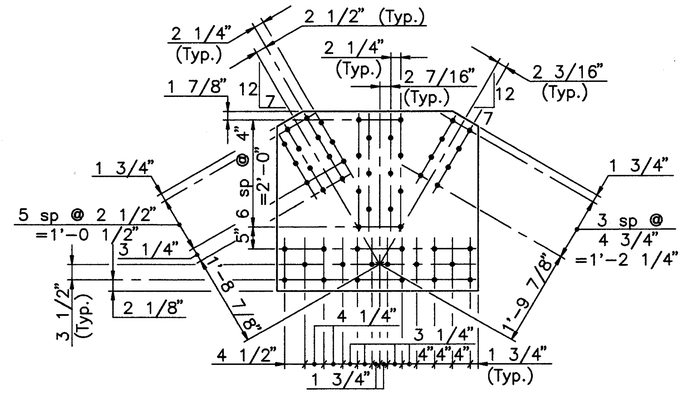

DETAIL A
(8 Required)

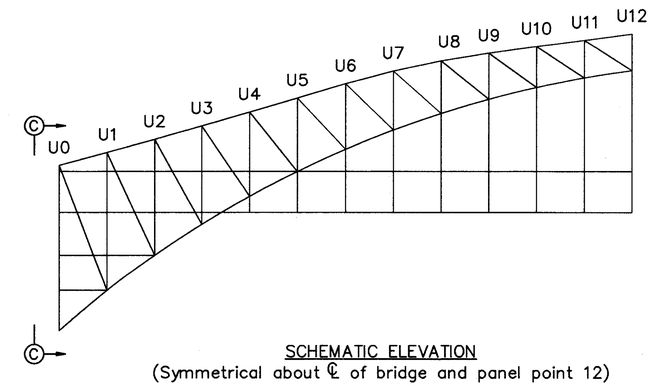

SCHEMATIC ELEVATION
(Symmetrical about ℄ of bridge and panel point 12)

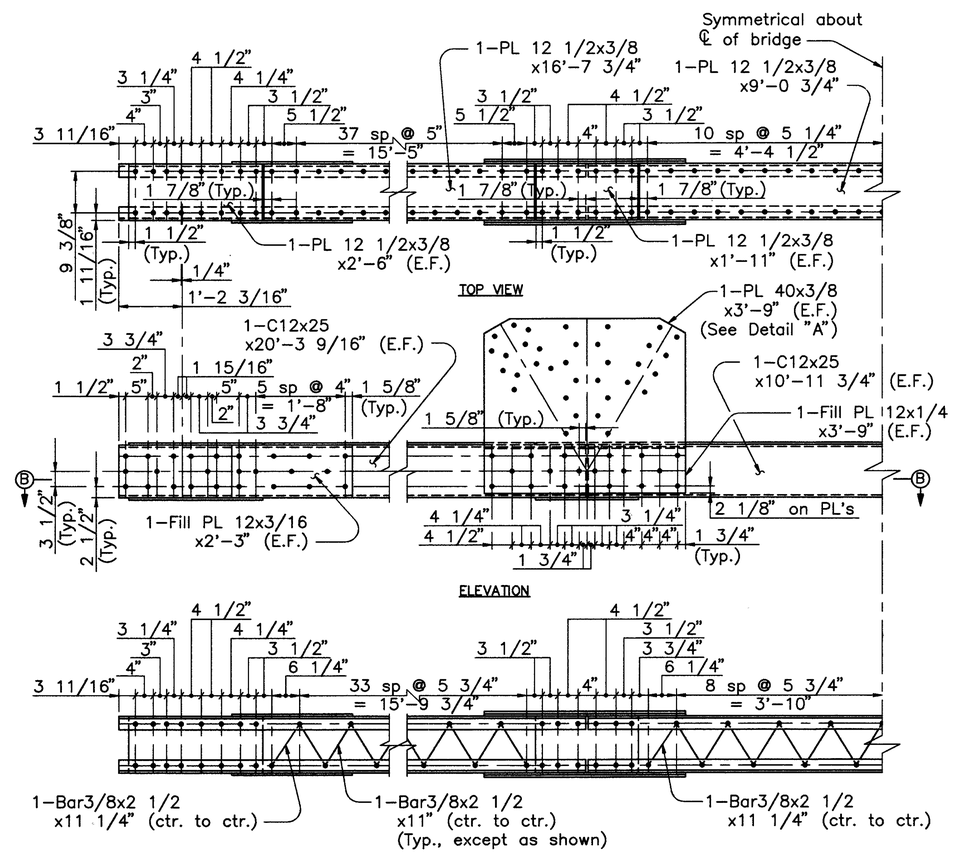

B – 6
(4 Required)

B – 1
(2 Required)

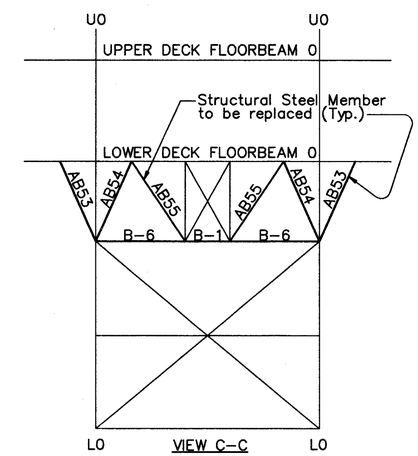

VIEW C–C

NOTE:
E.F. DENOTES EACH FACE

COUNTY BRIDGE NO. 84

HOWARD NEEDLES TAMMEN & BERGENDOFF
ARCHITECTS ENGINEERS PLANNERS
HNTB

REPLACEMENT–
END FRAME – 0 AND 0'
BR. NO. CUY – 6 – 1499
REHABILITATION OF
VETERANS MEMORIAL BRIDGE
(U.S. 6, 20, 42 & S.R. 3 OVER CUYAHOGA RIVER)
CLEVELAND CUYAHOGA COUNTY OHIO

DRAWN ADY	TRACED ADY	CHECKED JLV	REVIEWED CAB	REVISED
DATE 08/05/93	DATE 08/05/93	DATE 03/31/94	DATE 04/05/94	SHEET 138/270

\11646\STEEL\TENDFRO

FHWA REGION	STATE	PROJECT	
5	OHIO		

271/412

CUYAHOGA COUNTY
CUY – 6 – 14.99

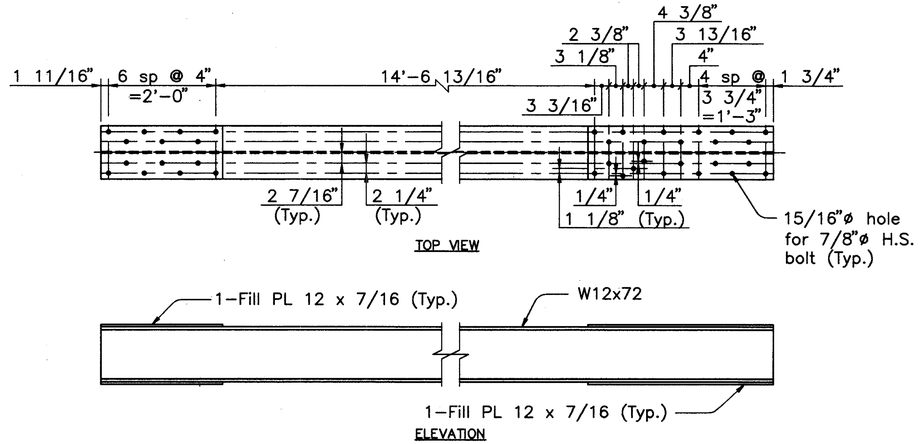

AB56
(4 Required)

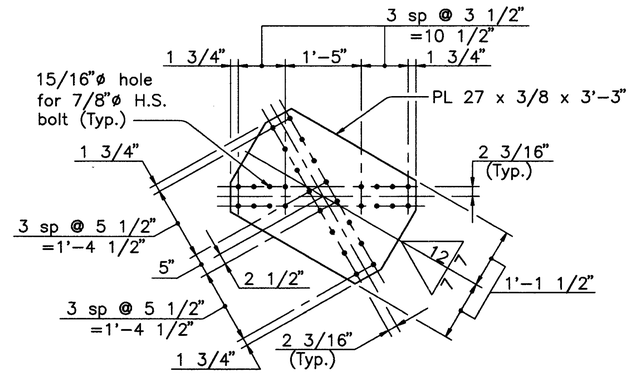

DETAIL A
(4 Required)

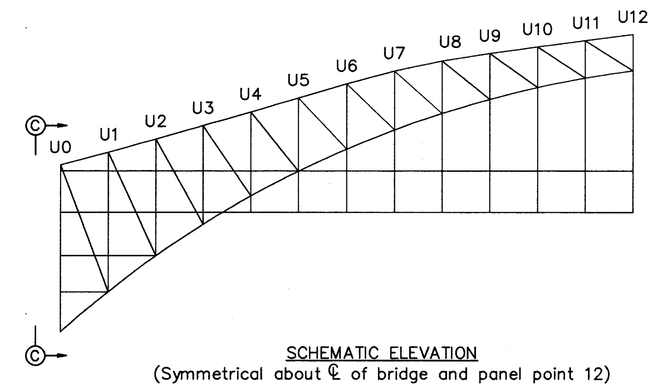

SCHEMATIC ELEVATION
(Symmetrical about ℄ of bridge and panel point 12)

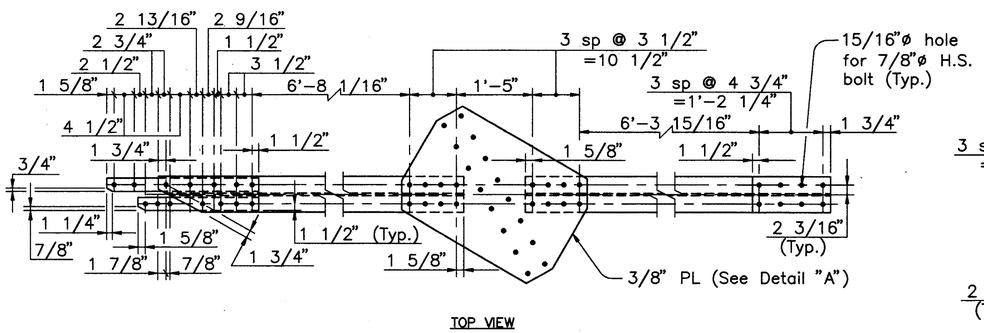

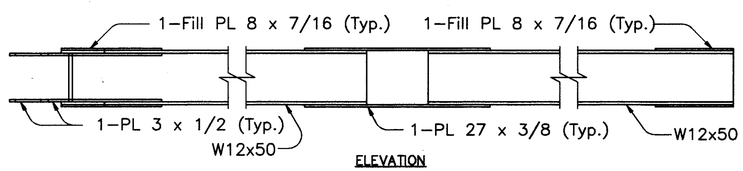

AB57
(2 Required)

AB58
(2 Required)

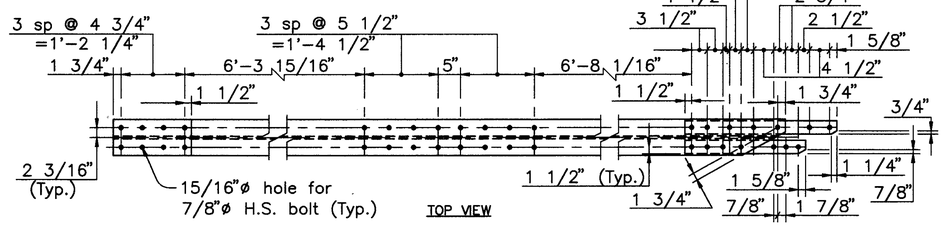

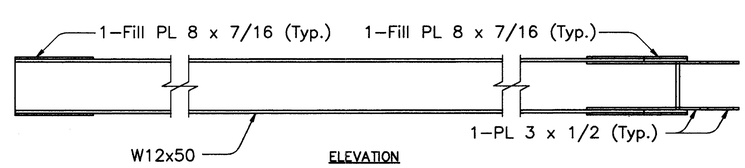

AB59
(2 Required)

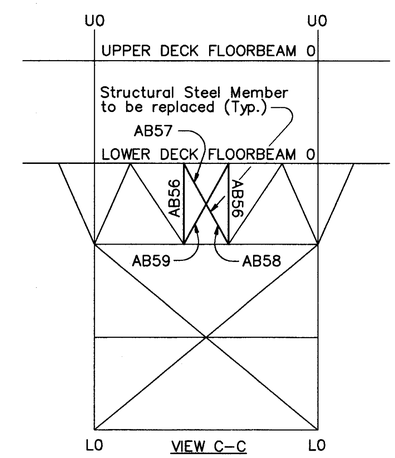

NOTES:

FOR ADDITIONAL REPLACEMENT DETAILS AT END FRAME 0 AND 0', SEE SHEETS 138, 140, 141, 145 AND 146 OF 270.

COUNTY BRIDGE NO. 84

HOWARD NEEDLES TAMMEN & BERGENDOFF
ARCHITECTS ENGINEERS PLANNERS
HNTB

REPLACEMENT–
END FRAME – 0 AND 0'
BR. NO. CUY – 6 – 1499
REHABILITATION OF
VETERANS MEMORIAL BRIDGE
(U.S. 6, 20, 42 & S.R. 3 OVER CUYAHOGA RIVER)
CLEVELAND CUYAHOGA COUNTY OHIO

DRAWN ADY	TRACED ADY	CHECKED WDD	REVIEWED CAB	REVISED
DATE 08/19/93	DATE 08/19/93	DATE 03/31/94	DATE 04/05/94	SHEET 139/270

\11646\STEEL\2ENDFRO

FHWA REGION	STATE	PROJECT	
5	OHIO		

272
412

CUYAHOGA COUNTY
CUY – 6 – 14.99

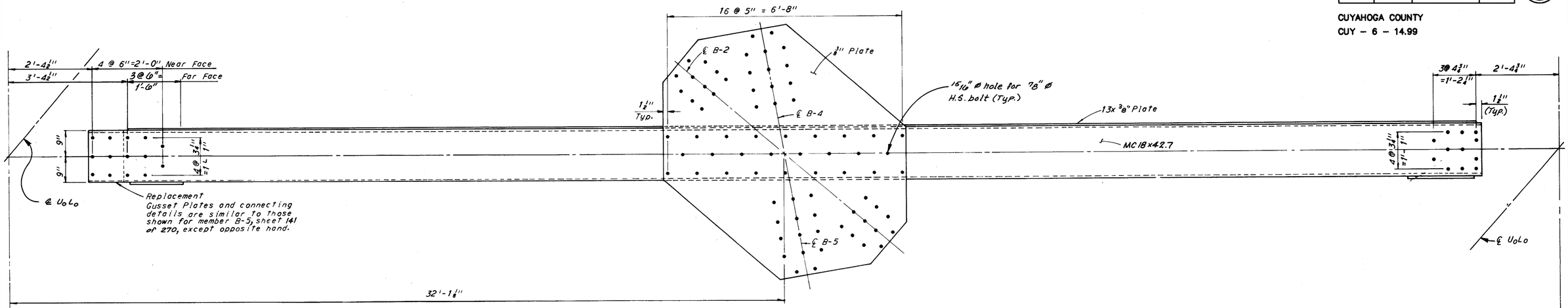

ELEVATION

(West end of span shown looking East)

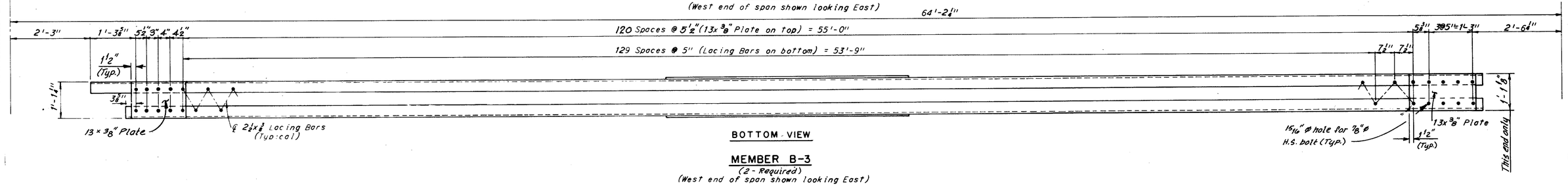

BOTTOM VIEW

MEMBER B-3
(2 - Required)
(West end of span shown looking East)

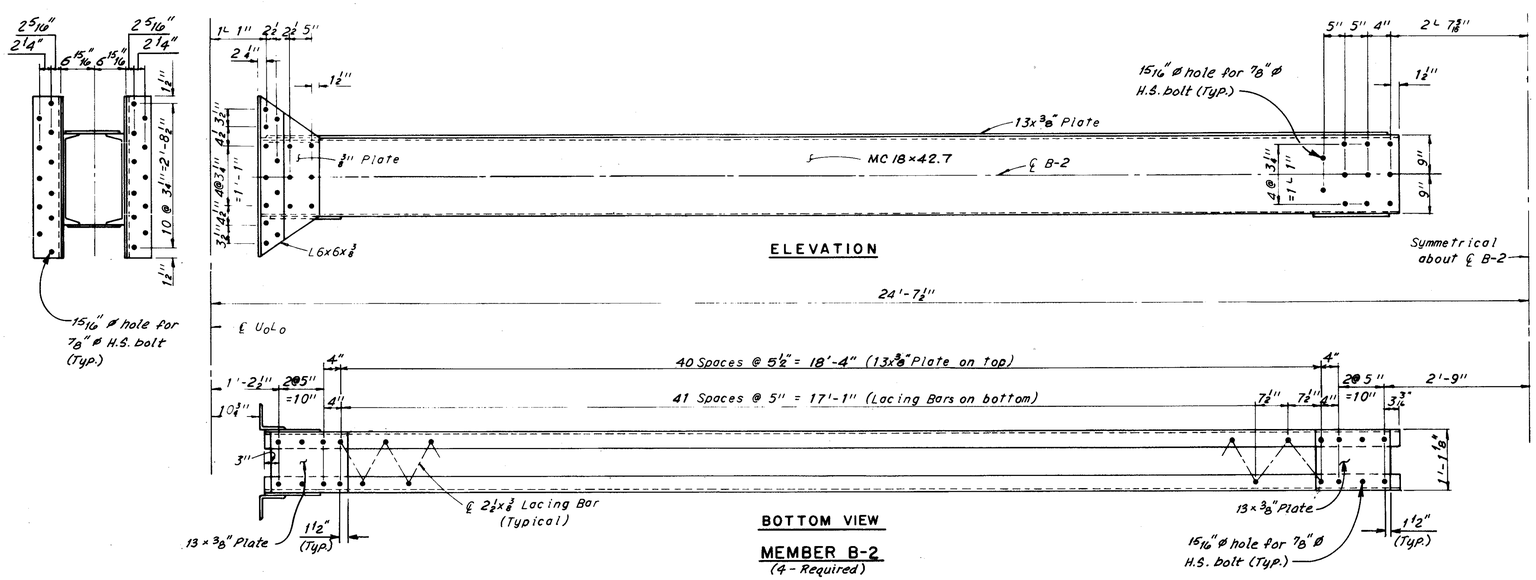

ELEVATION

BOTTOM VIEW

MEMBER B-2
(4 - Required)

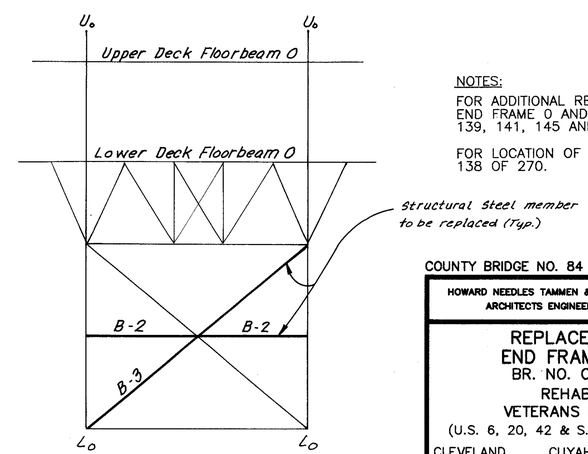

VIEW C-C

NOTES:

FOR ADDITIONAL REPLACEMENT DETAILS AT END FRAME 0 AND 0', SEE SHEETS 138, 139, 141, 145 AND 146 OF 270.

FOR LOCATION OF VIEW C–C, SEE SHEET 138 OF 270.

COUNTY BRIDGE NO. 84

HOWARD NEEDLES TAMMEN & BERGENDOFF
ARCHITECTS ENGINEERS PLANNERS
HNTB

REPLACEMENT DETAILS
END FRAME – 0 AND 0'
BR. NO. CUY – 6 – 1499
REHABILITATION OF
VETERANS MEMORIAL BRIDGE
(U.S. 6, 20, 42 & S.R. 3 OVER CUYAHOGA RIVER)

CLEVELAND CUYAHOGA COUNTY OHIO

DRAWN A.D.Y.	TRACED J.E.	CHECKED J.L.V.	REVIEWED C.A.B.	REVISED
DATE 12/14/92	DATE 12/15/92	DATE 3/31/94	DATE 4/5/94	SHEET 140/270

FHWA REGION	STATE	PROJECT	
5	OHIO		

273/412

CUYAHOGA COUNTY
CUY – 6 – 14.99

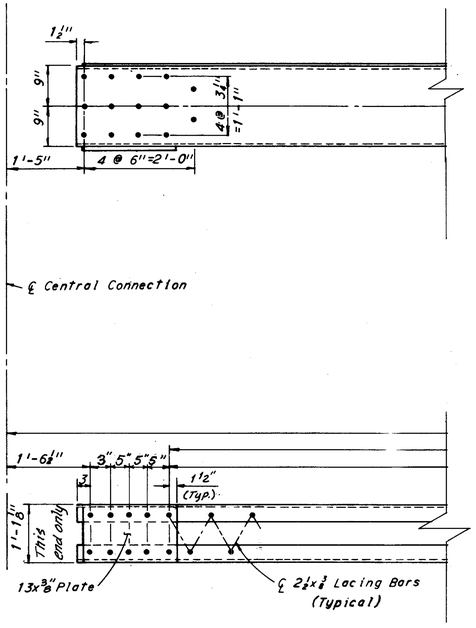

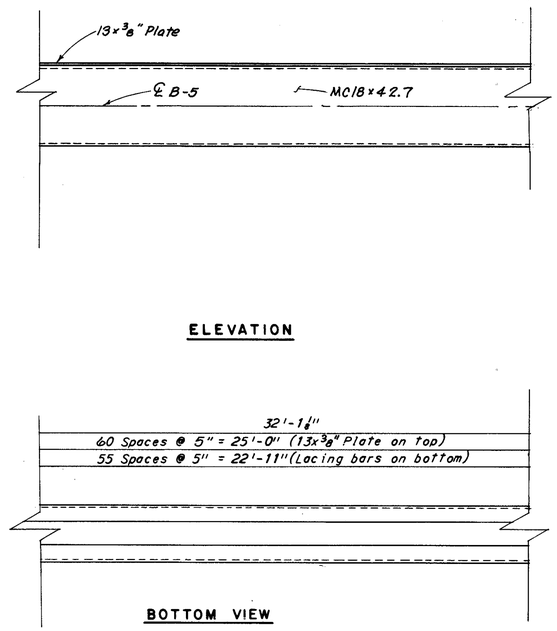

ELEVATION

BOTTOM VIEW

MEMBER B-5
(2-Required)
(West end of span shown looking East)

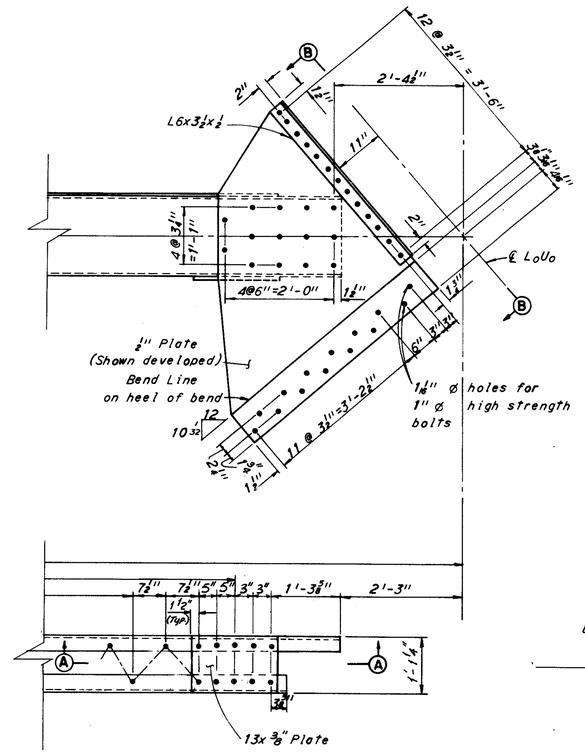

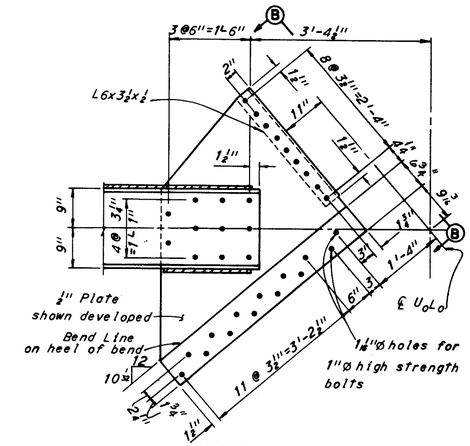

SECTION A-A

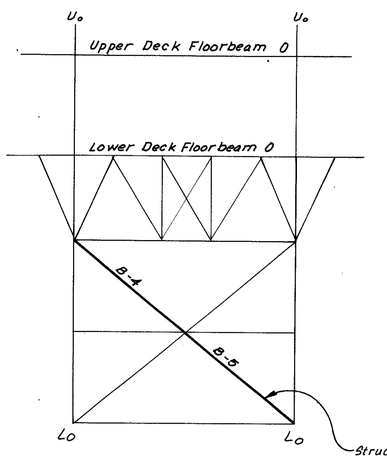

VIEW C-C

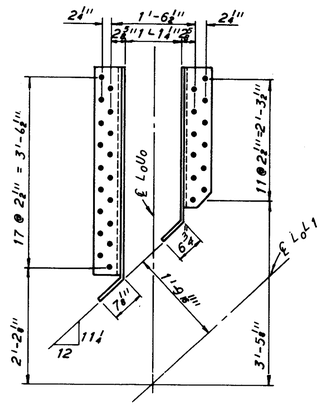

SECTION B-B

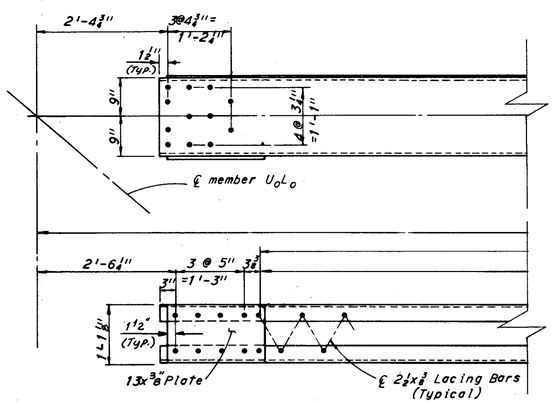

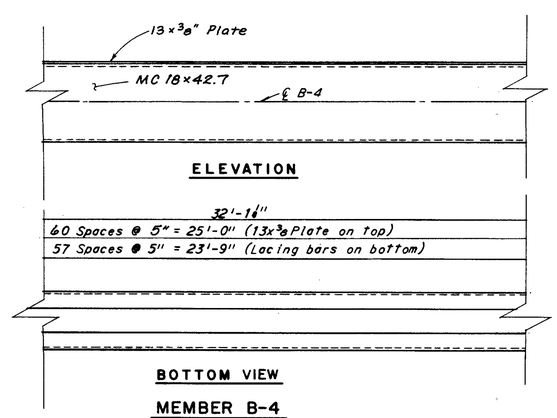

ELEVATION

BOTTOM VIEW

MEMBER B-4
(2-Required)

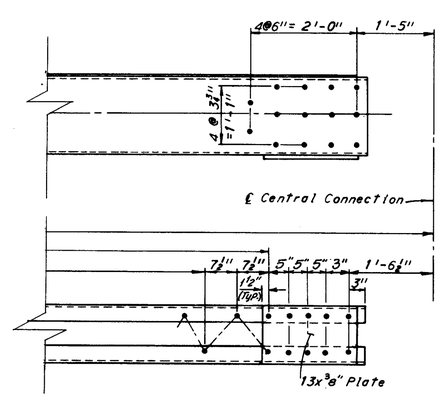

NOTES:

FOR ADDITIONAL REPLACEMENT DETAILS AT END FRAME 0 AND 0', SEE SHEETS 138, 139, 140, 145 AND 146 OF 270.

FOR LOCATION OF VIEW C–C, SEE SHEET 138 OF 270.

ALL HOLES SHALL BE 15/16"Ø FOR 7/8"Ø HIGH STRENGTH BOLTS, EXCEPT AS SHOWN.

COUNTY BRIDGE NO. 84

HOWARD NEEDLES TAMMEN & BERGENDOFF
ARCHITECTS ENGINEERS PLANNERS
HNTB

REPLACEMENT DETAILS
END FRAME – 0 AND 0'
BR. NO. CUY – 6 – 1499
REHABILITATION OF
VETERANS MEMORIAL BRIDGE
(U.S. 6, 20, 42 & S.R. 3 OVER CUYAHOGA RIVER)

CLEVELAND CUYAHOGA COUNTY OHIO

DRAWN A.D.Y.	TRACED J.E.	CHECKED J.L.V.	REVIEWED C.A.B.	REVISED
DATE 12/15/92	DATE 12/16/92	DATE 3/31/94	DATE 4/5/94	SHEET 141/270

FHWA REGION	STATE	PROJECT	
5	OHIO		

274/412

CUYAHOGA COUNTY
CUY – 6 – 14.99

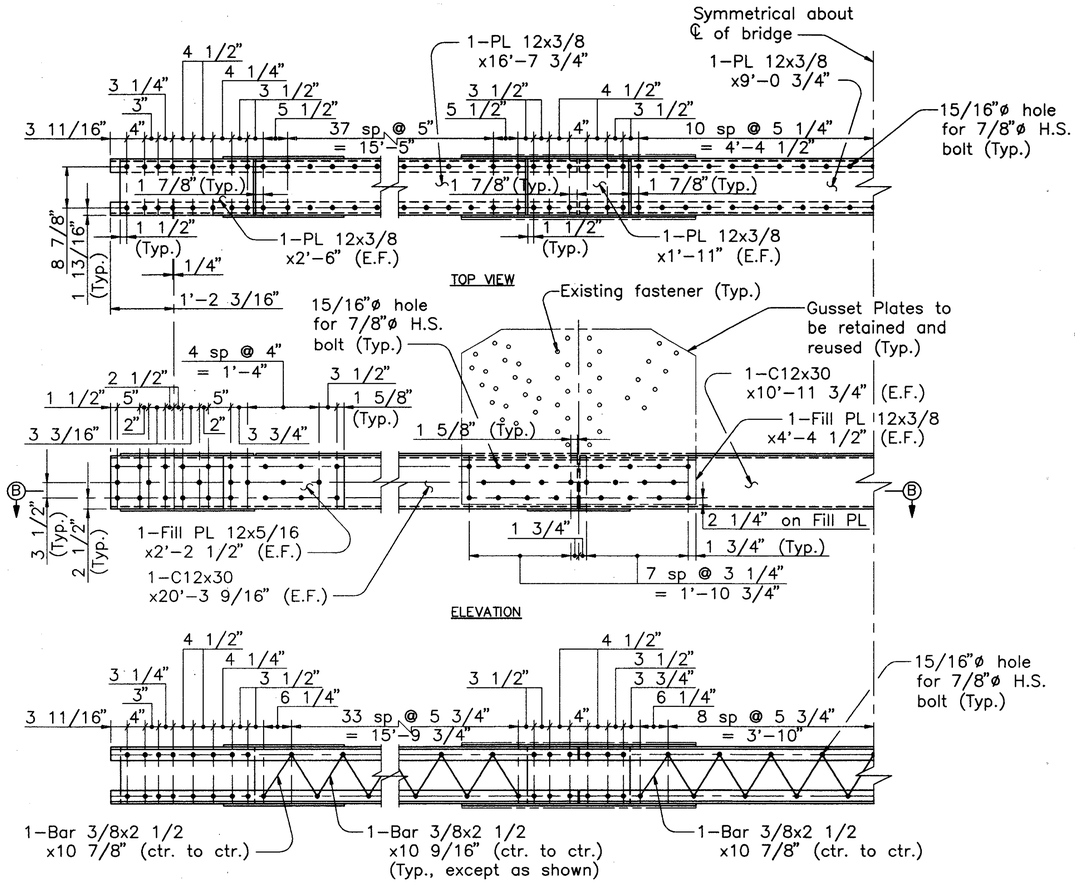

AB61
(4 Required)

AB62
(2 Required)

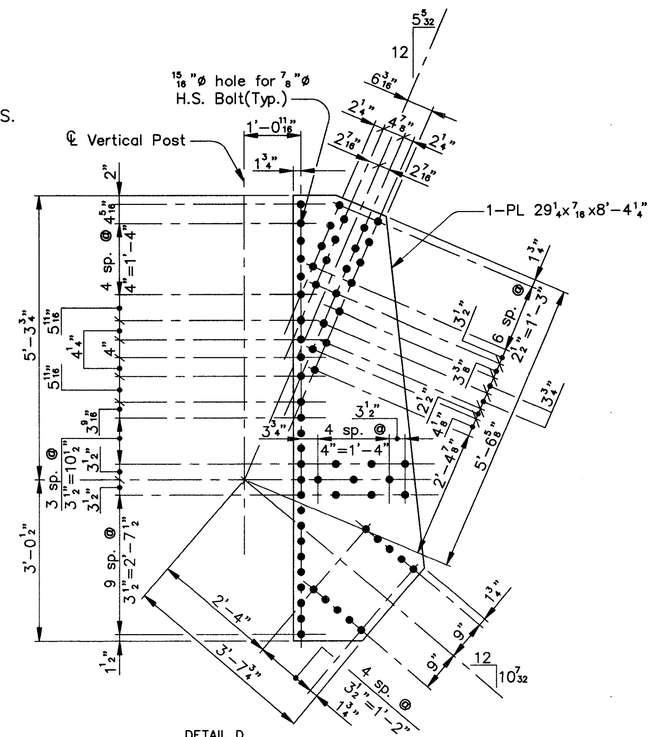

DETAIL D
(8 Required)

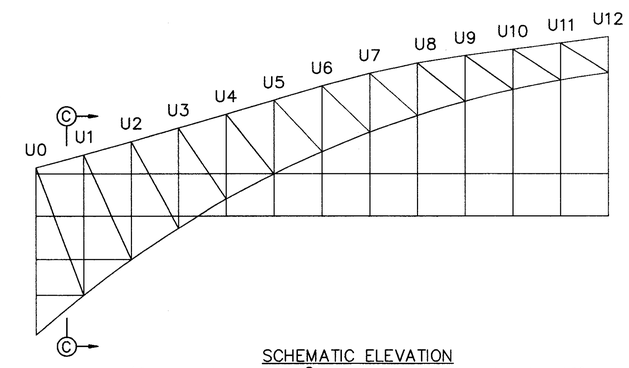

SCHEMATIC ELEVATION
(Symmetrical about ℄ of bridge and panel point 12)

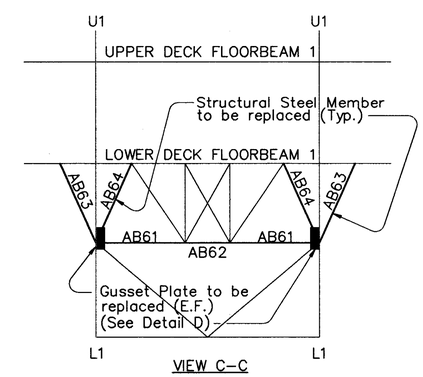

VIEW C–C

NOTES:
E.F. denotes each face

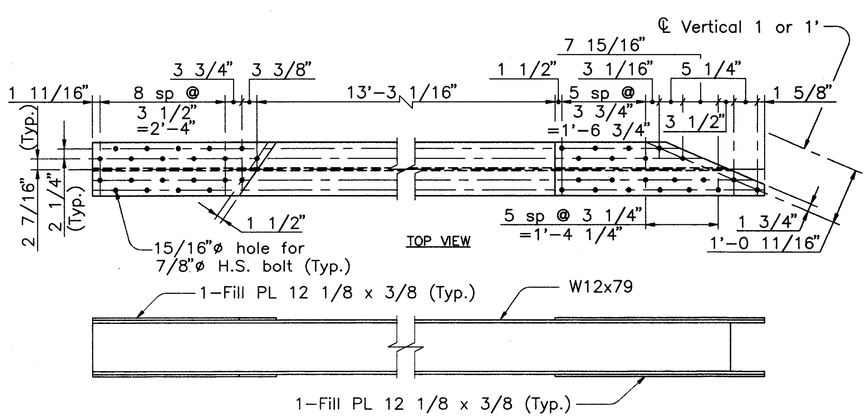

AB63
(4 Required)

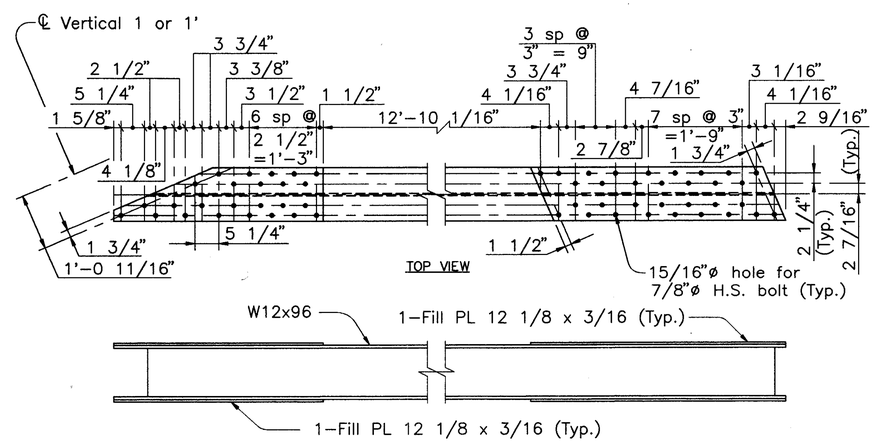

AB64
(4 Required)

COUNTY BRIDGE NO. 84

HOWARD NEEDLES TAMMEN & BERGENDOFF
ARCHITECTS ENGINEERS PLANNERS
HNTB

REPLACEMENT–
SWAY FRAME – 1 AND 1'
BR. NO. CUY – 6 – 1499
REHABILITATION OF
VETERANS MEMORIAL BRIDGE
(U.S. 6, 20, 42 & S.R. 3 OVER CUYAHOGA RIVER)

CLEVELAND CUYAHOGA COUNTY OHIO

DRAWN	TRACED	CHECKED	REVIEWED	REVISED
ADY	ADY	WDD	CAB	
DATE 08/20/93	DATE 08/20/93	DATE 03/31/94	DATE 04/05/94	SHEET 142/270

\11646\STEEL\1SWAYFR1

FHWA REGION	STATE	PROJECT	
5	OHIO		

275/412

CUYAHOGA COUNTY
CUY – 6 – 14.99

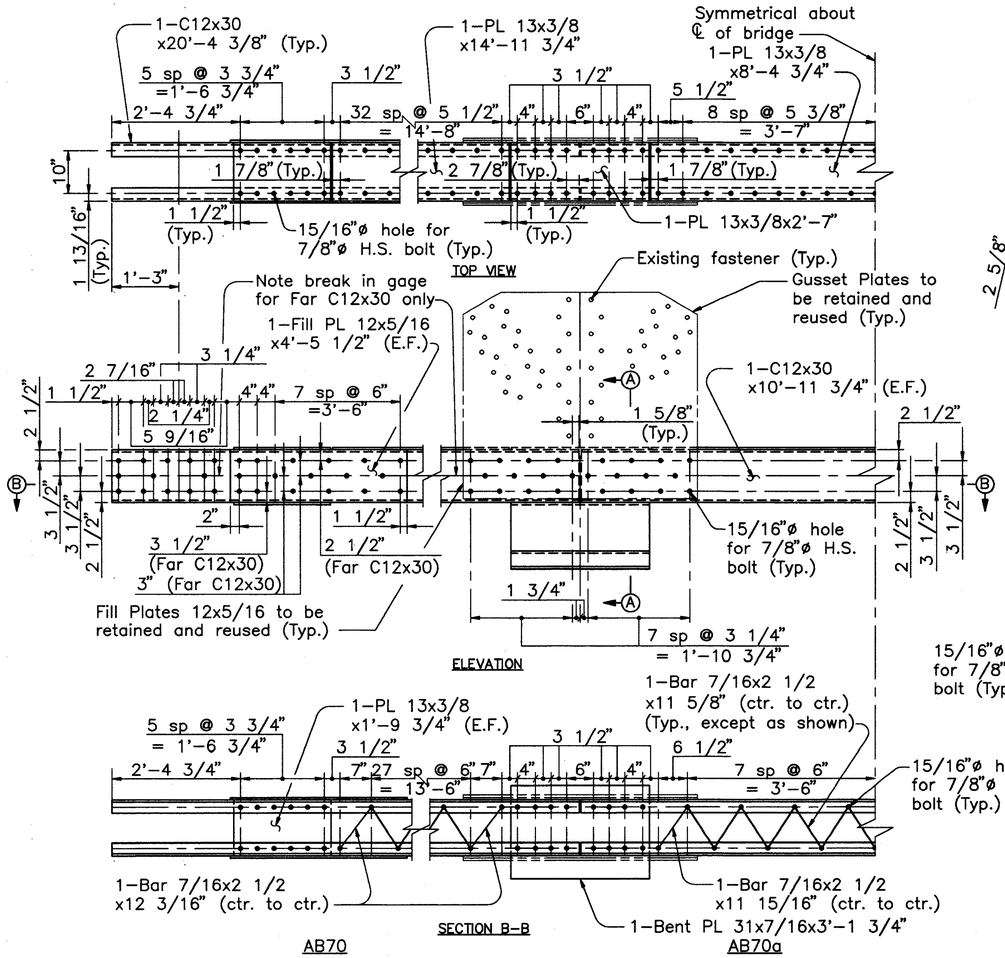

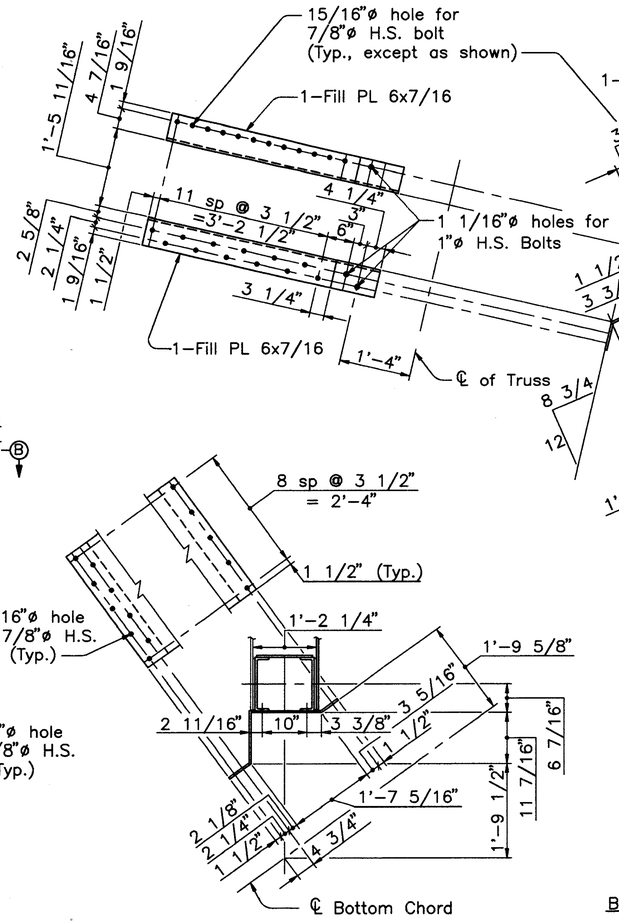

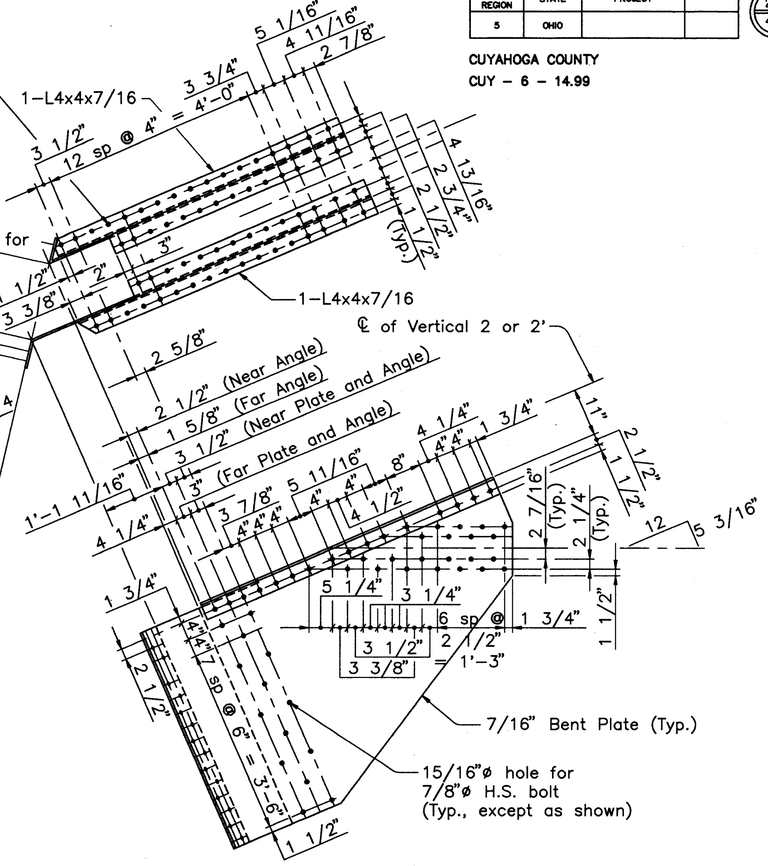

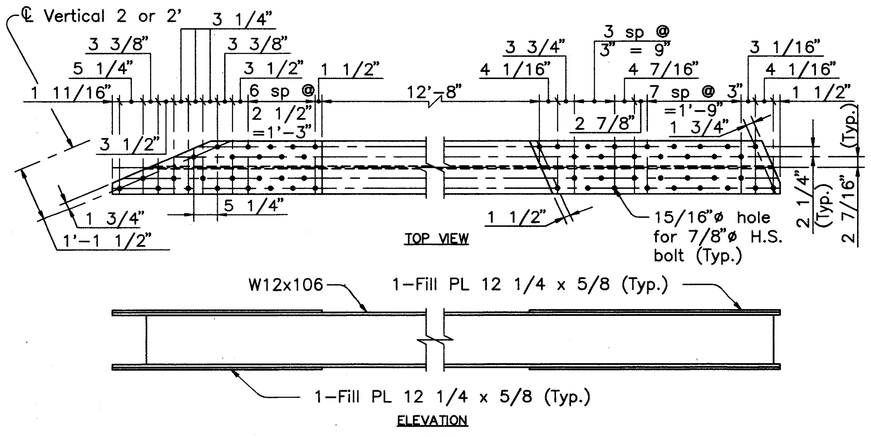

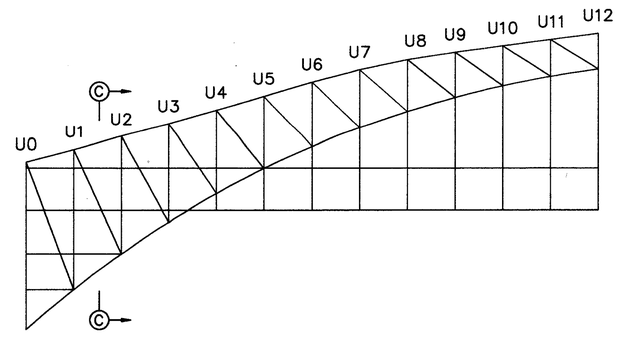

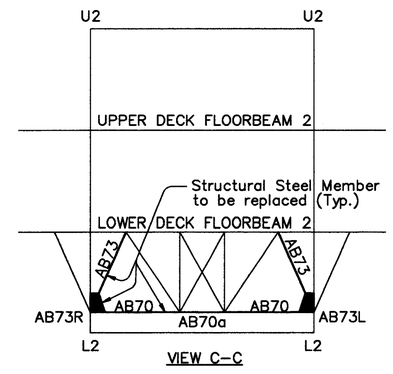

NOTES:
E.F. denotes each face

COUNTY BRIDGE NO. 84

HOWARD NEEDLES TAMMEN & BERGENDOFF
ARCHITECTS ENGINEERS PLANNERS
HNTB

REPLACEMENT–
SWAY FRAME – 2 AND 2'
BR. NO. CUY – 6 – 1499
REHABILITATION OF
VETERANS MEMORIAL BRIDGE
(U.S. 6, 20, 42 & S.R. 3 OVER CUYAHOGA RIVER)

CLEVELAND CUYAHOGA COUNTY OHIO

DRAWN ADY	TRACED ADY	CHECKED WDD	REVIEWED CAB	REVISED
DATE 08/27/93	DATE 08/27/93	DATE 03/31/94	DATE 04/05/94	SHEET 143/270

\11646\STEEL\1SWAYFR2

FHWA REGION	STATE	PROJECT	
5	OHIO		

276/412

CUYAHOGA COUNTY
CUY – 6 – 14.99

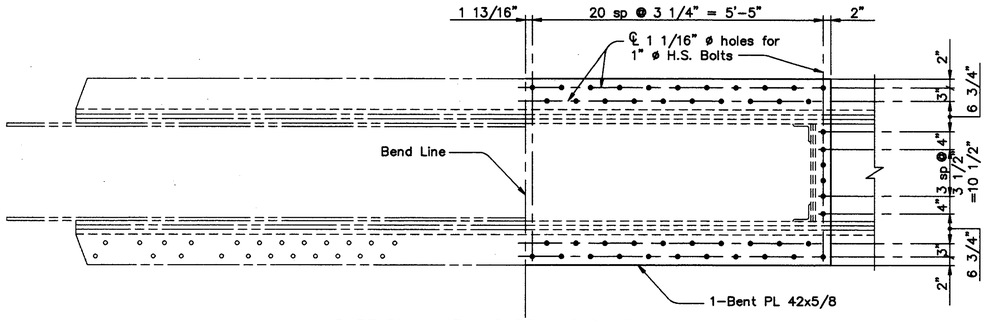

PART PLAN VIEW LOWER CHORD AT L0

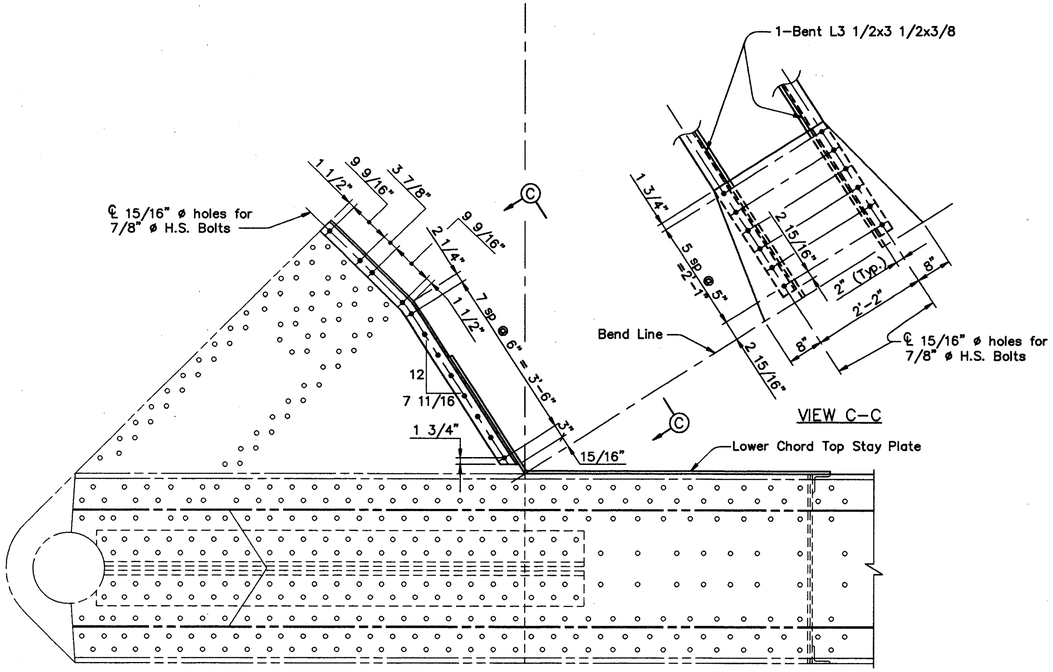

PART ELEVATION VIEW LOWER CHORD AT L0

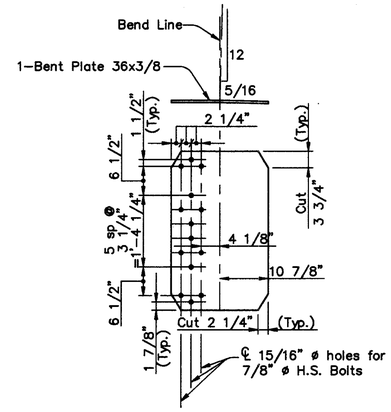

UPPER CHORD SLIDING PLATE
(1-Required, Shown Developed)

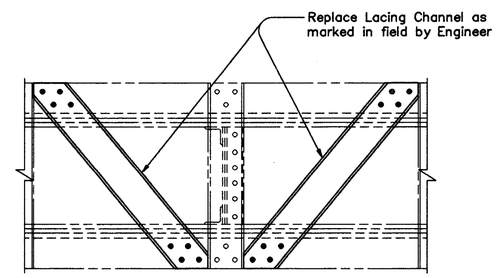

TYPICAL LOWER CHORD PLAN VIEW

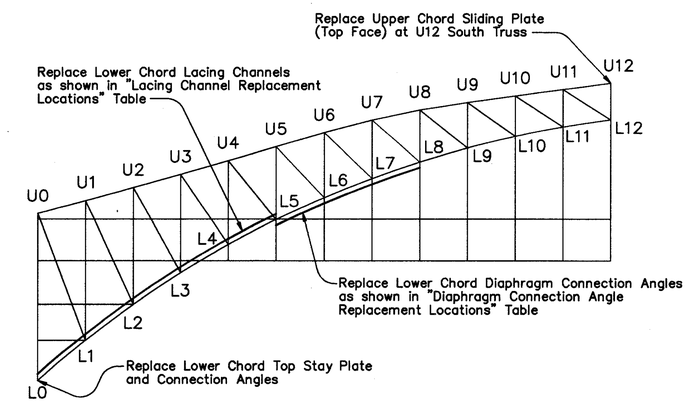

SCHEMATIC ELEVATION
(Symmetrical about ℄ of bridge and panel point 12)

TABLE OF DIMENSIONS					
Lacing Channel	A	B	C	D	E
C2	2 1/16"	1 5/8"	1'-6 1/2"	2'-7 5/8"	8 7/16"
C3	2"	1 5/8"	1'-5 5/16"	2'-7 5/8"	7 15/16"
C15	2 1/4"	1 7/16"	1'-7 7/8"	2'-7 7/8"	8 15/16"
C28	2 7/16"	1 7/16"	1'-10 3/8"	2'-8"	9 13/16"

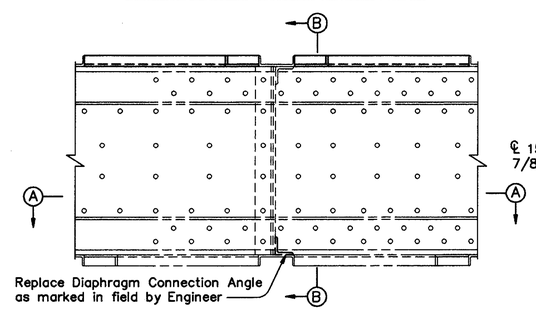

TYPICAL LOWER CHORD ELEVATION

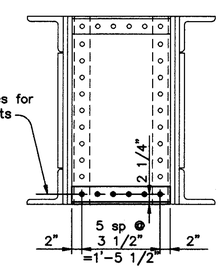

SECTION B-B
(A707 and A707X As Shown)
(Lacing Channels not shown)

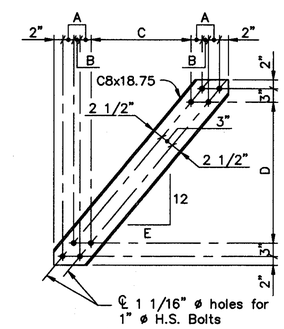

LOWER CHORD LACING CHANNEL
(C2R,C3R,C15L,C28L As Shown)
(C2L,C3L,C15R,C28R Opp. Hand)

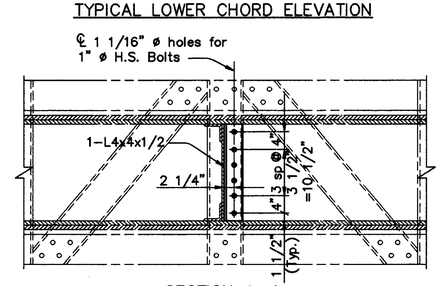

SECTION A-A
(A707 As Shown)
(Omit holes in A707X)

DIAPHRAGM CONN. ANGLE REPLACEMENT LOCATIONS		
LOWER CHORD MEMBER	NORTH TRUSS (QUANTITY-MARK NO.)	SOUTH TRUSS (QUANTITY-MARK NO.)
L5 – L6	2-A707	1-A707
L6 – L7	–	1-A707
L7 – L8	1-A707	2-A707
L7' – L8'	2-A707	4-A707
L6' – L7'	2-A707	1-A707, 1-A707X
L5' – L6'	2-A707	4-A707

LACING CHANNEL REPLACEMENT LOCATIONS		
LOWER CHORD MEMBER	NORTH TRUSS TOP FACE (QUANTITY-MARK NO.)	SOUTH TRUSS TOP FACE (QUANTITY-MARK NO.)
L0 – L1	1-C28L, 1-C28R	1-C28L, 2-C28R
L1 – L2	2-C28L	2-C28L, 2-C28R
L2 – L3	2-C15L	1-C15L, 2-C15R
L3 – L4	1-C2R, 2-C2L	2-C2R, 2-C2L
L4 – L5	1-C3R	1-C3L
L4' – L5'	1-C3L	1-C3R
L3' – L4'	1-C2R, 2-C2L	1-C2R, 1-C2L
L2' – L3'	2-C15L, 2-C15R	2-C15L, 2-C15R
L1' – L2'	1-C28L, 2-C28R	2-C28L, 2-C28R
L0' – L1'	1-C28L, 2-C28R	2-C28L, 1-C28R

COUNTY BRIDGE NO. 84

HOWARD NEEDLES TAMMEN & BERGENDOFF
ARCHITECTS ENGINEERS PLANNERS
HNTB

TRUSS CHORD
REPAIR DETAILS
BR. NO. CUY – 6 – 1499
REHABILITATION OF
VETERANS MEMORIAL BRIDGE
(U.S. 6, 20, 42 & S.R. 3 OVER CUYAHOGA RIVER)
CLEVELAND CUYAHOGA COUNTY OHIO

DRAWN ADY	TRACED ADY	CHECKED JLV	REVIEWED CAB	REVISED
DATE 09/07/93	DATE 09/07/93	DATE 03/31/94	DATE 4/05/94	SHEET 144/270

\11646\STEEL\CHORD

FHWA REGION	STATE	PROJECT	
5	OHIO		

277/412

CUYAHOGA COUNTY
CUY – 6 – 14.99

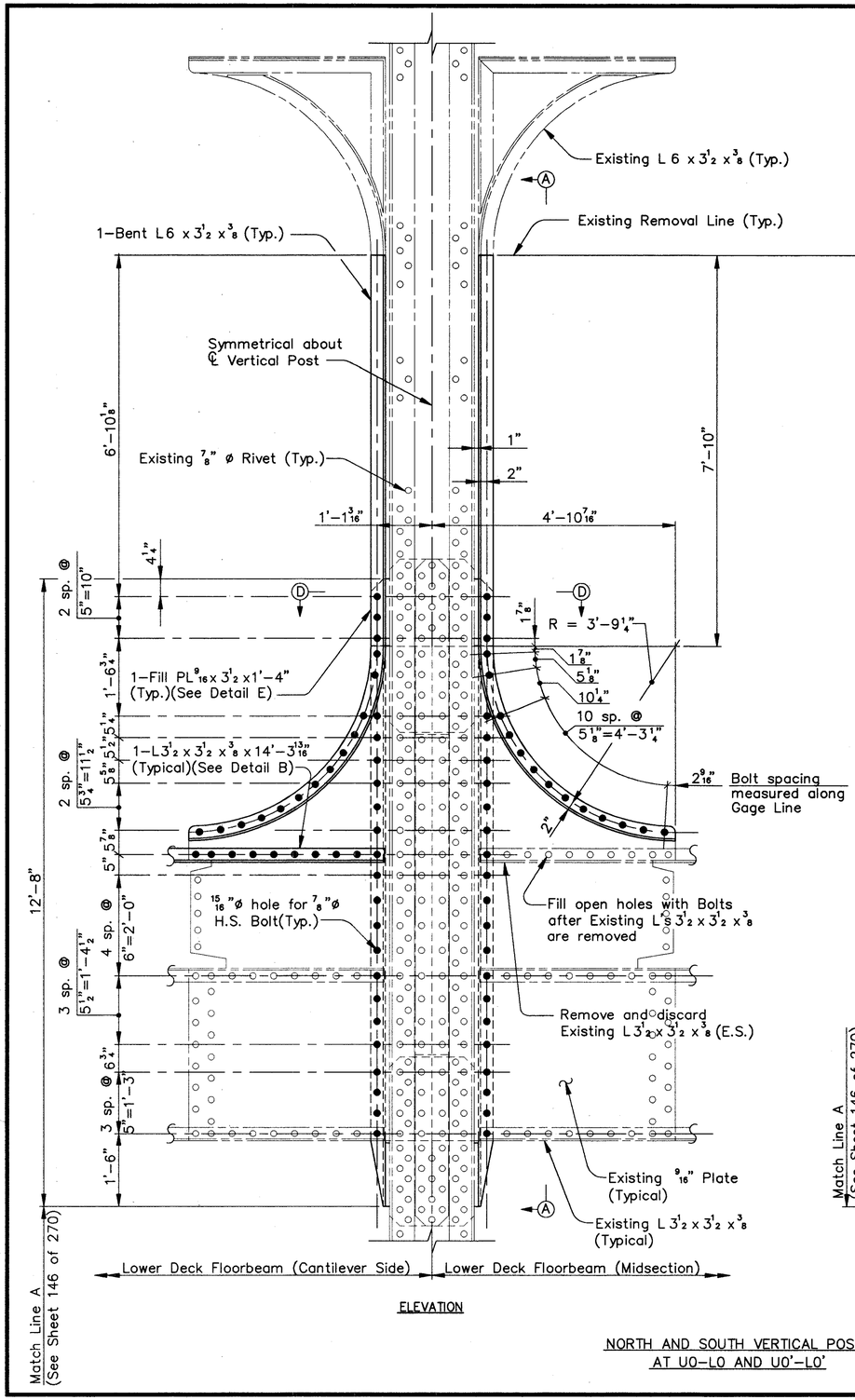

ELEVATION

NORTH AND SOUTH VERTICAL POSTS AT U0–L0 AND U0'–L0'

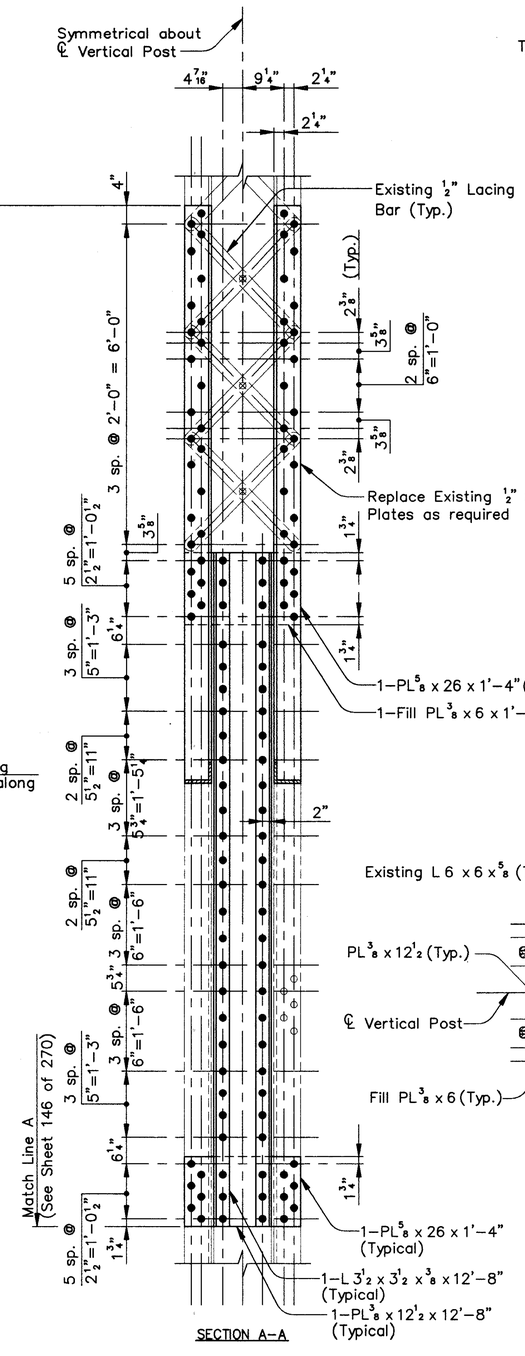

SECTION A–A

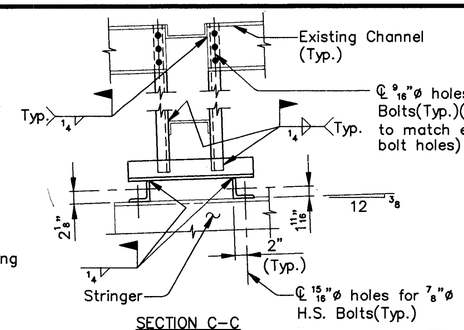

SECTION C–C

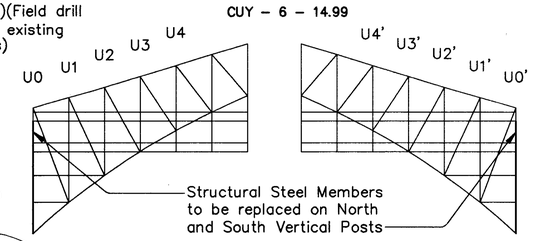

SCHEMATIC ELEVATION

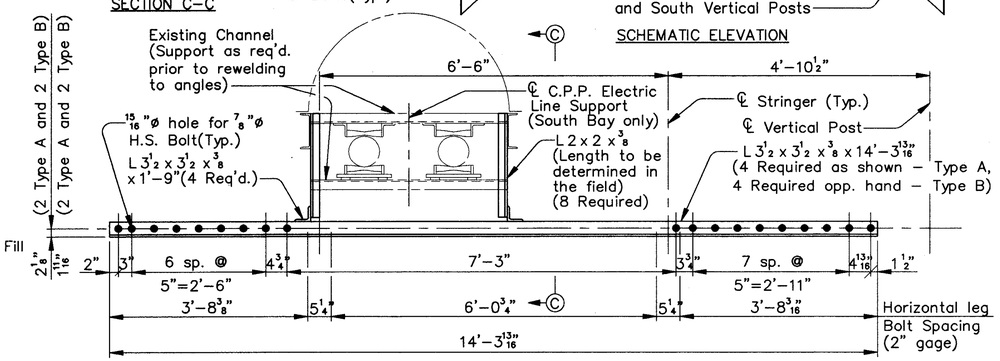

DETAIL B
(Stringers not shown)

NOTE: REPLACE LACING BARS ONE AT A TIME.

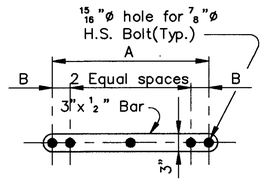

LACING BAR DETAIL

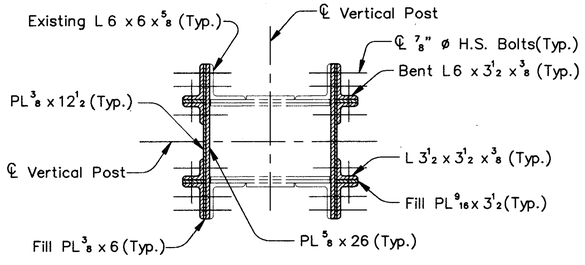

SECTION D–D

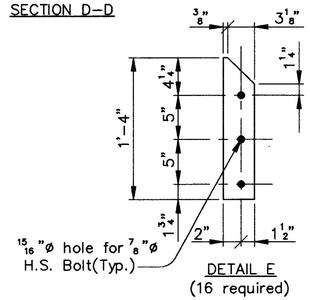

DETAIL E
(16 required)

ADDITIONAL LACING BAR REPLACEMENT LOCATIONS FOR VERTICAL MEMBERS U0–L0 AND U0'–L0'

VERTICAL	TRUSS	ORIENTATION	NO.	A	B	LENGTH
U0'–L0'	N	North Face	4	2'–10 5/16"	3 3/8"	3'–1 5/16"
U0'–L0'	N	South Face	4	2'–10 5/16"	3 3/8"	3'–1 5/16"
U0'–L0'	N	North Face	16	2'–9 1/4"	3 1/4"	3'–0 1/4"
U0'–L0'	N	South Face	16	2'–9 1/4"	3 1/4"	3'–0 1/4"
U0'–L0'	N	North Face	0	2'–8 1/2"	3 3/16"	2'–11 1/2"
U0'–L0'	N	South Face	0	2'–8 1/2"	3 3/16"	2'–11 1/2"
U0'–L0'	S	North Face	4	2'–10 5/16"	3 3/8"	3'–1 5/16"
U0'–L0'	S	South Face	4	2'–10 5/16"	3 3/8"	3'–1 5/16"
U0'–L0'	S	North Face	16	2'–9 1/4"	3 1/4"	3'–0 1/4"
U0'–L0'	S	South Face	16	2'–9 1/4"	3 1/4"	3'–0 1/4"
U0'–L0'	S	North Face	0	2'–8 1/2"	3 3/16"	2'–11 1/2"
U0'–L0'	S	South Face	0	2'–8 1/2"	3 3/16"	2'–11 1/2"
U0–L0	N	North Face	4	2'–10 5/16"	3 3/8"	3'–1 5/16"
U0–L0	N	South Face	4	2'–10 5/16"	3 3/8"	3'–1 5/16"
U0–L0	N	North Face	16	2'–9 1/4"	3 1/4"	3'–0 1/4"
U0–L0	N	South Face	16	2'–9 1/4"	3 1/4"	3'–0 1/4"
U0–L0	N	North Face	0	2'–8 1/2"	3 3/16"	2'–11 1/2"
U0–L0	N	South Face	0	2'–8 1/2"	3 3/16"	2'–11 1/2"
U0–L0	S	North Face	4	2'–10 5/16"	3 3/8"	3'–1 5/16"
U0–L0	S	South Face	4	2'–10 5/16"	3 3/8"	3'–1 5/16"
U0–L0	S	North Face	16	2'–9 1/4"	3 1/4"	3'–0 1/4"
U0–L0	S	South Face	16	2'–9 1/4"	3 1/4"	3'–0 1/4"
U0–L0	S	North Face	0	2'–8 1/2"	3 3/16"	2'–11 1/2"
U0–L0	S	South Face	0	2'–8 1/2"	3 3/16"	2'–11 1/2"

Notes:
Bars to be replaced will be marked in the field by the Engineer.
E.S. denotes Each Side.

COUNTY BRIDGE NO. 84

HOWARD NEEDLES TAMMEN & BERGENDOFF
ARCHITECTS ENGINEERS PLANNERS
HNTB

REPAIR OF VERTICAL MEMBERS AT FLOORBEAMS
BR. NO. CUY – 6 – 1499
REHABILITATION OF
VETERANS MEMORIAL BRIDGE
(U.S. 6, 20, 42 & S.R. 3 OVER CUYAHOGA RIVER)
CLEVELAND CUYAHOGA COUNTY OHIO

DRAWN J.L.V.	TRACED J.L.V.	CHECKED A.D.Y.	REVIEWED C.A.B.	REVISED
DATE 8/07/93	DATE 8/07/93	DATE 11/12/93	DATE 4/05/94	SHEET 145/270

\11646\VERT1A.DWG

FHWA REGION	STATE	PROJECT	
5	OHIO		

278/412

CUYAHOGA COUNTY
CUY - 6 - 14.99

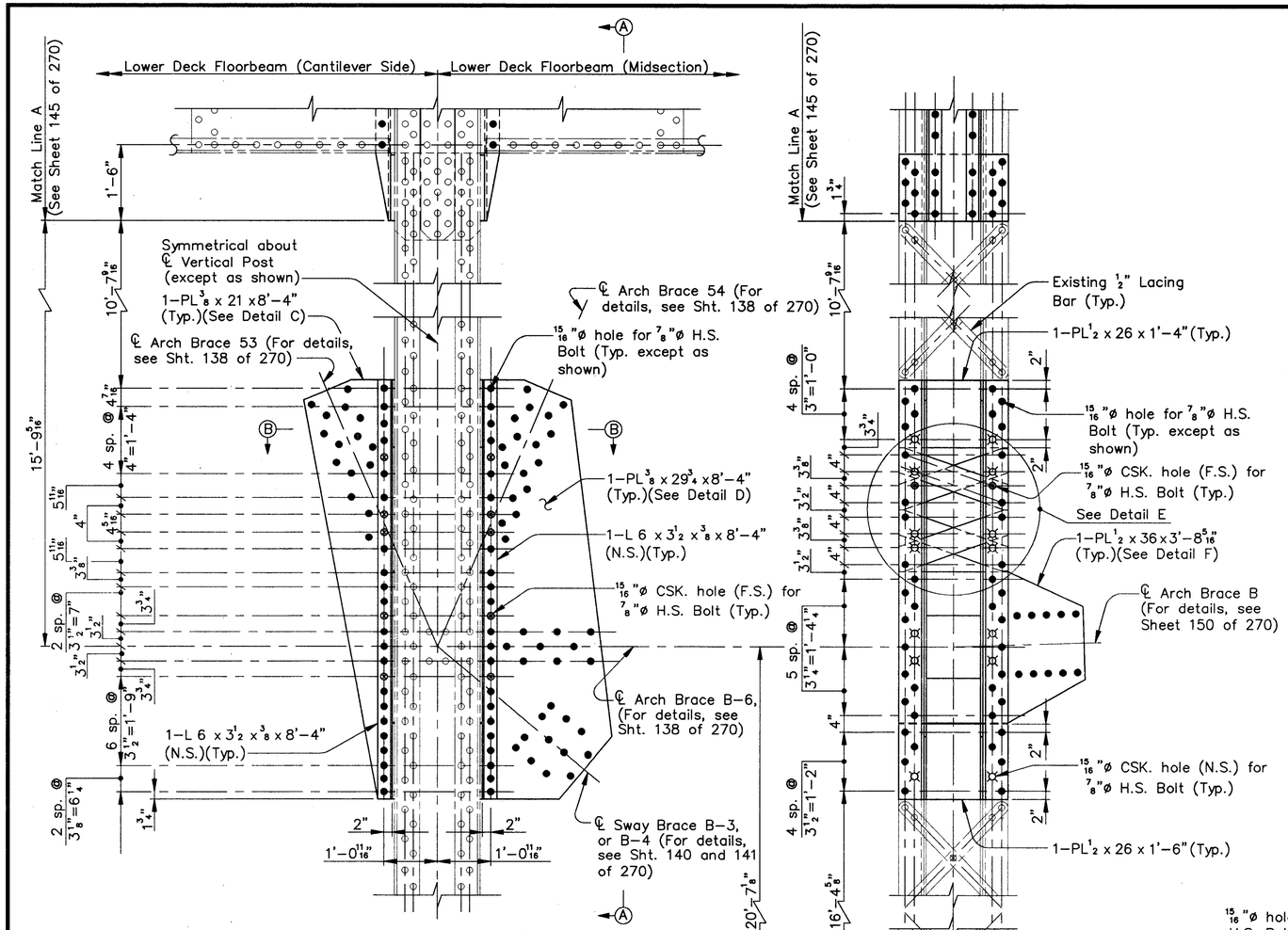

ELEVATION

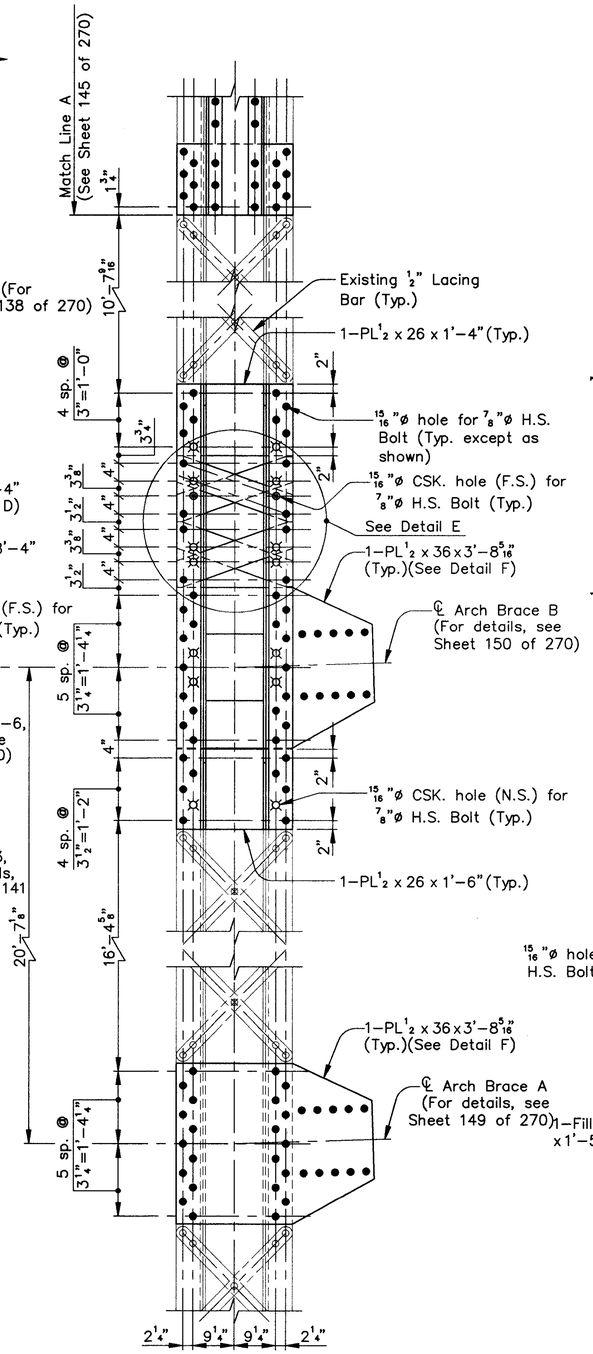

SECTION A-A

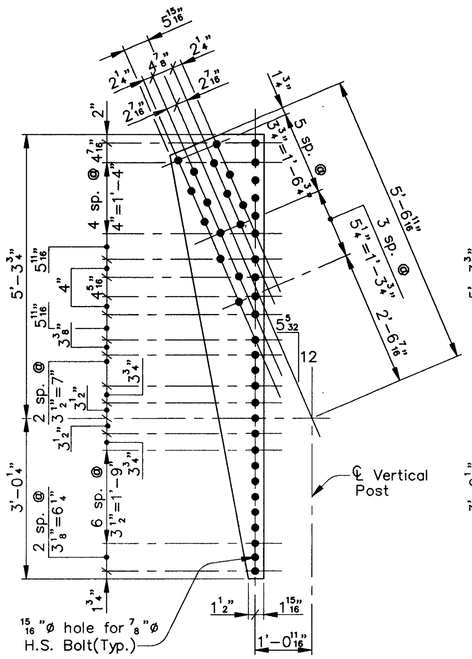

DETAIL C
(8 Required)

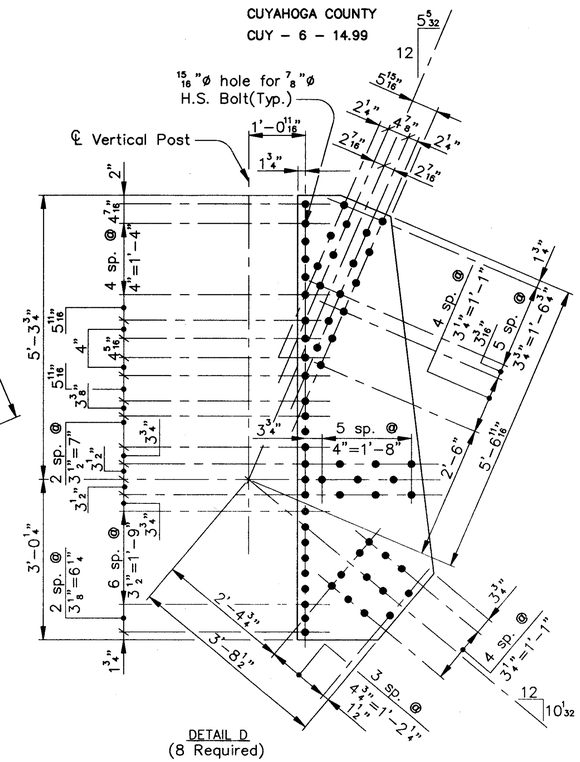

DETAIL D
(8 Required)

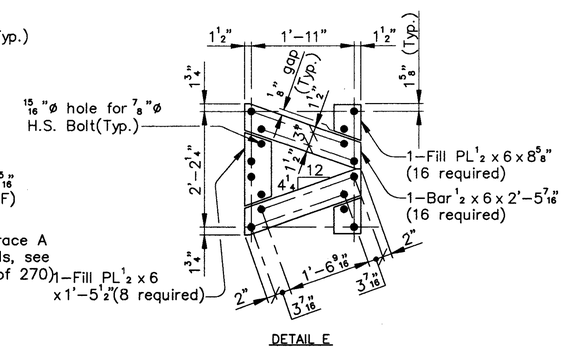

DETAIL E

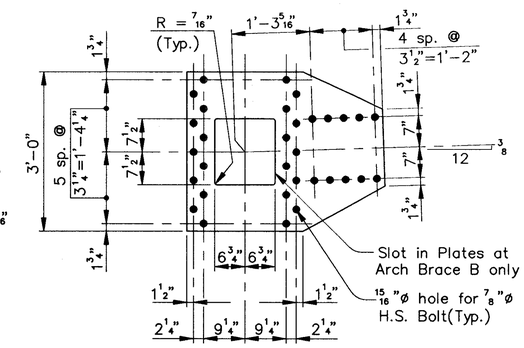

DETAIL F
(16 Required)

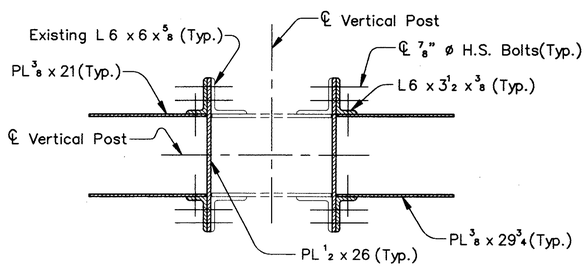

SECTION B-B

NORTH AND SOUTH VERTICAL POSTS
AT U0-L0 AND U0'-L0'

Notes:
(N.S.) denotes Near Side.
(F.S.) denotes Far Side.

COUNTY BRIDGE NO. 84

HOWARD NEEDLES TAMMEN & BERGENDOFF
ARCHITECTS ENGINEERS PLANNERS
HNTB

REPAIR OF VERTICAL MEMBERS
AT FLOORBEAMS
BR. NO. CUY - 6 - 1499
REHABILITATION OF
VETERANS MEMORIAL BRIDGE
(U.S. 6, 20, 42 & S.R. 3 OVER CUYAHOGA RIVER)
CLEVELAND CUYAHOGA COUNTY OHIO

DRAWN J.L.V.	TRACED J.L.V.	CHECKED A.D.Y.	REVIEWED C.A.B.	REVISED
DATE 8/17/93	DATE 8/17/93	DATE 11/12/93	DATE 4/05/94	SHEET 146/270

\11646\VERT1B.DWG

FHWA REGION	STATE	PROJECT	
5	OHIO		

279/412

CUYAHOGA COUNTY
CUY – 6 – 14.99

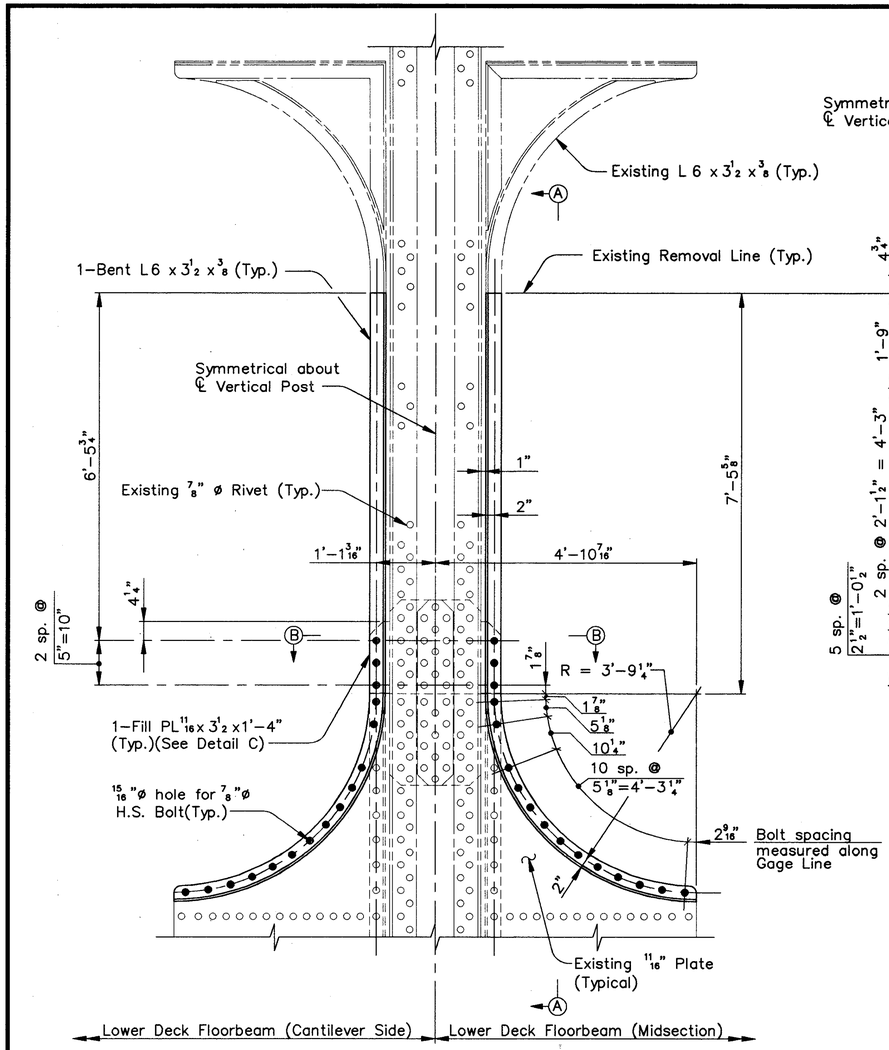

ELEVATION

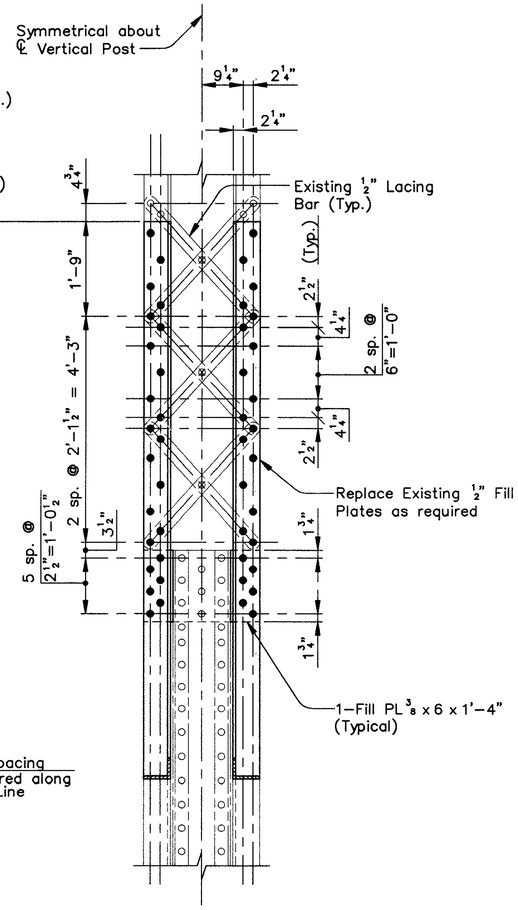

SECTION A–A

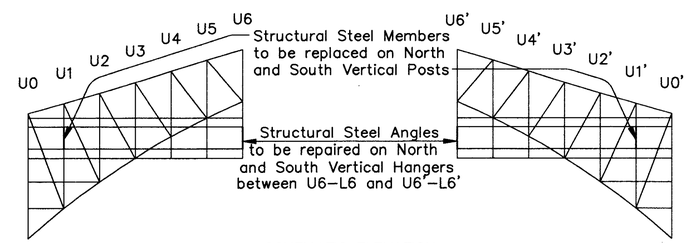

SCHEMATIC ELEVATION

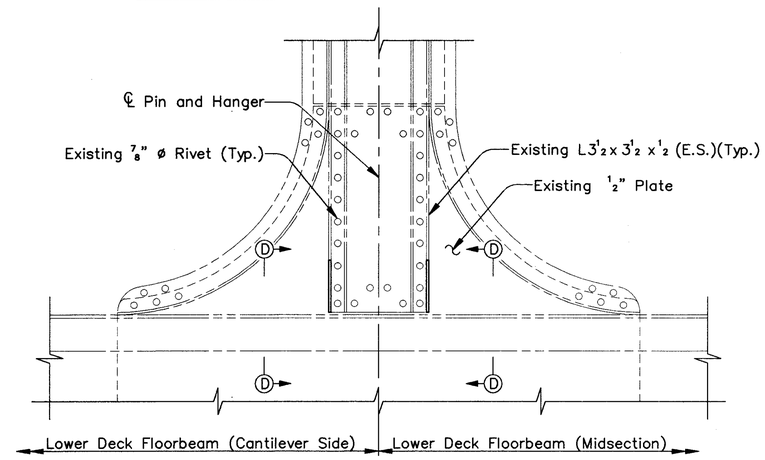

ELEVATION

NORTH AND SOUTH VERTICAL HANGERS
AT U6–L6 THRU U6'–L6'

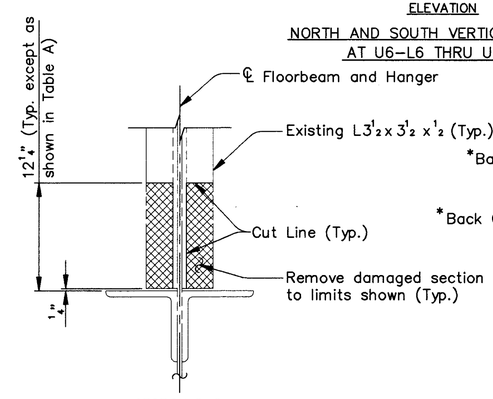

SECTION D–D
(Removal)

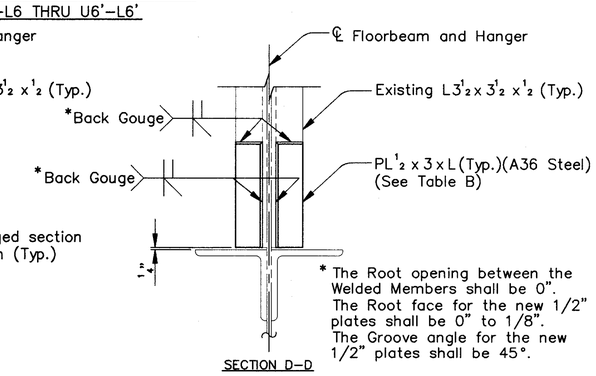

SECTION D–D

* The Root opening between the Welded Members shall be 0". The Root face for the new 1/2" plates shall be 0" to 1/8". The Groove angle for the new 1/2" plates shall be 45°.

Notes:
(N.S.) denotes Near Side.
(F.S.) denotes Far Side.
(E.S.) denotes Each Side.

NORTH AND SOUTH VERTICAL POSTS
AT U1–L1 AND U1'–L1'

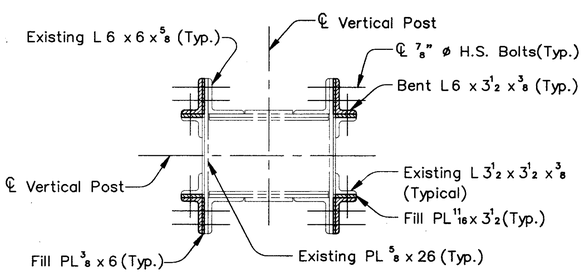

SECTION B–B

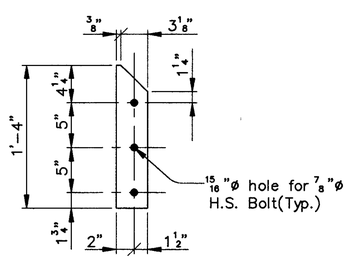

DETAIL C
(16 required)

TABLE A

Lower Deck Floorbeam	North Truss		South Truss	
	East Face	West Face	East Face	West Face
8	———	———	———	0"
7'	———	———	———	18 1/4"
8'	———	———	24 1/4"	18 1/4"
10'	18 1/4"	———	———	———

TABLE B

Length(L)	Number Required
12"	94
18"	6
24"	2
Total	102

COUNTY BRIDGE NO. 84

HOWARD NEEDLES TAMMEN & BERGENDOFF
ARCHITECTS ENGINEERS PLANNERS
HNTB

REPAIR OF VERTICAL MEMBERS
AT FLOORBEAMS
BR. NO. CUY – 6 – 1499
REHABILITATION OF
VETERANS MEMORIAL BRIDGE
(U.S. 6, 20, 42 & S.R. 3 OVER CUYAHOGA RIVER)
CLEVELAND CUYAHOGA COUNTY OHIO

DRAWN J.L.V.	TRACED J.L.V.	CHECKED A.D.Y.	REVIEWED C.A.B.	REVISED
DATE 8/09/93	DATE 8/09/93	DATE 11/16/93	DATE 4/05/94	SHEET 147/270

\11646\VERT2.DWG

FHWA REGION	STATE	PROJECT	
5	OHIO		

280/412

CUYAHOGA COUNTY
CUY – 6 – 14.99

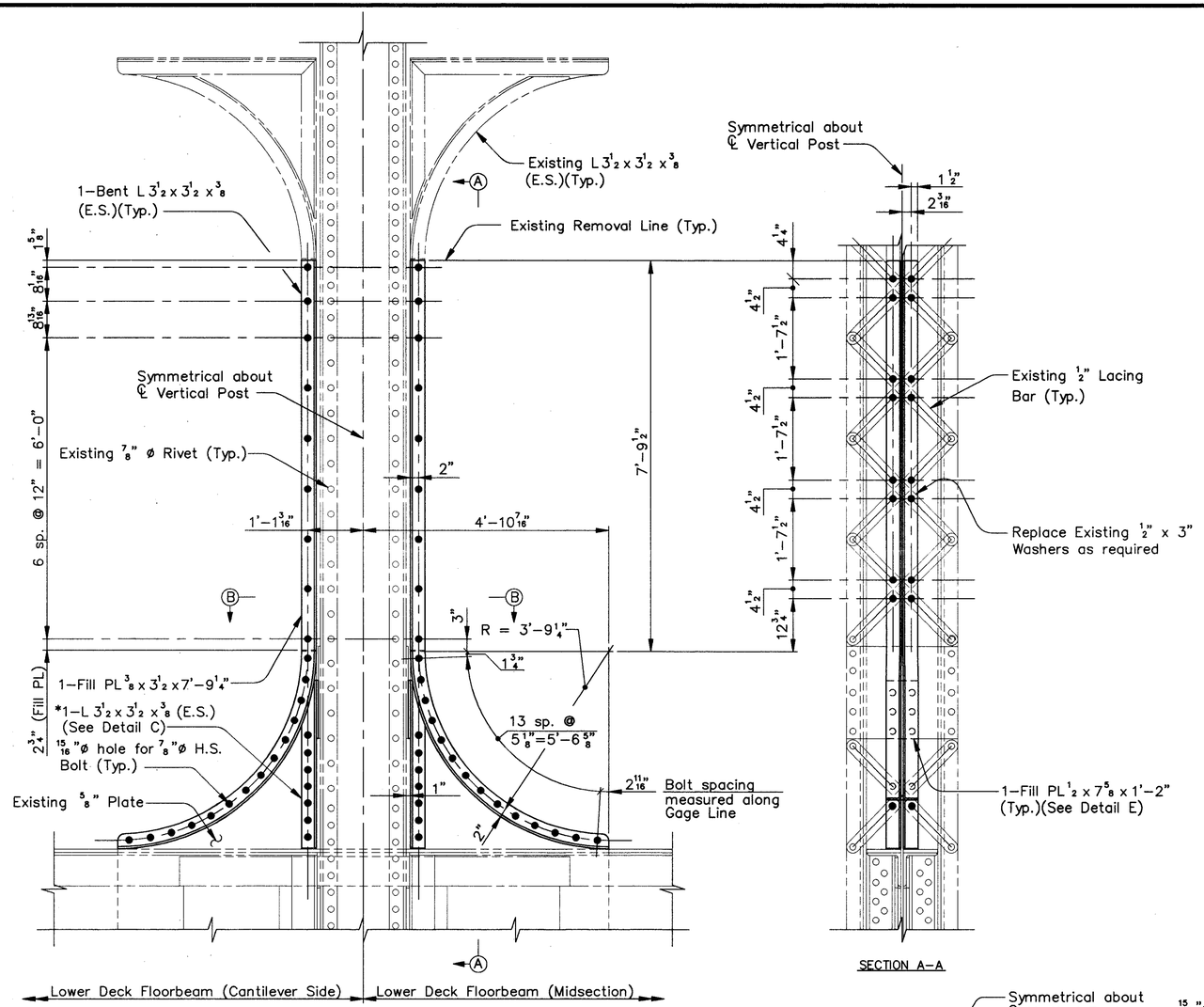

*Angles shall be replaced at the North and South Posts at U3–L3 only.

ELEVATION

SECTION A–A

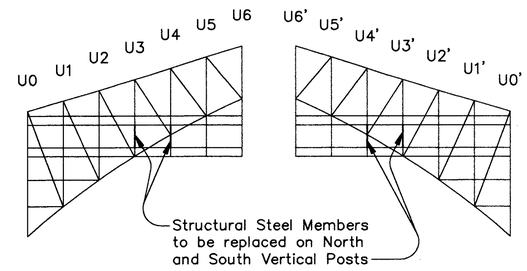

SCHEMATIC ELEVATION

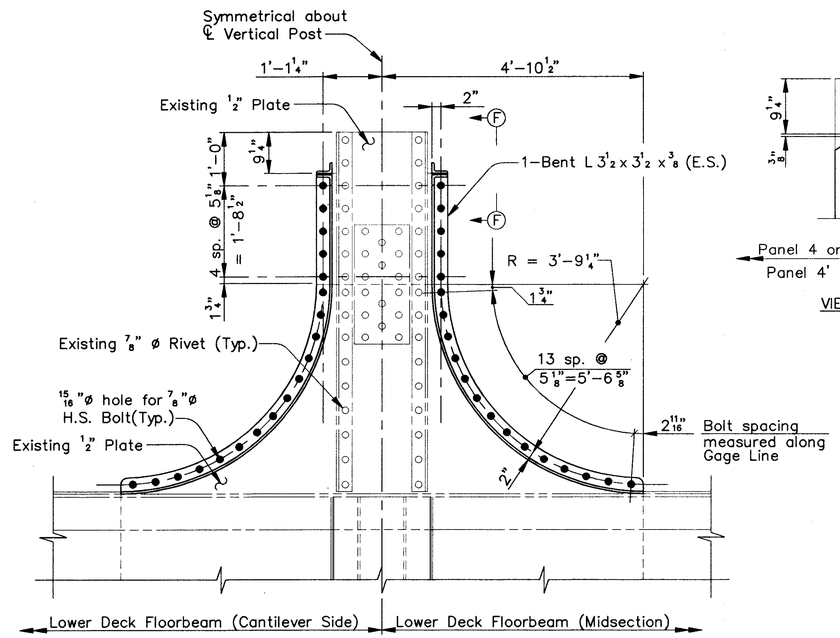

ELEVATION

NORTH AND SOUTH VERTICAL POSTS AT U4–L4 AND U4'–L4'

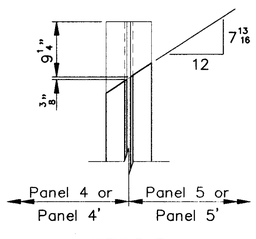

VIEW F–F

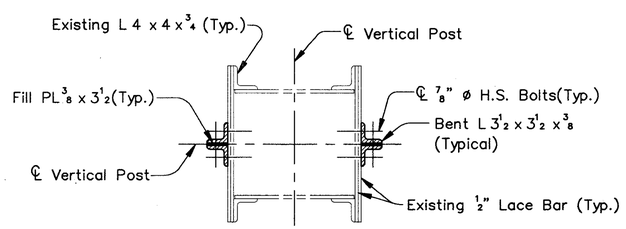

SECTION B–B

NORTH AND SOUTH VERTICAL POSTS AT U3–L3 AND U3'–L3'

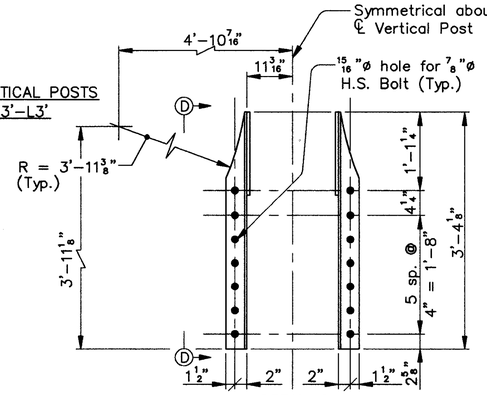

DETAIL C
(4 required each)

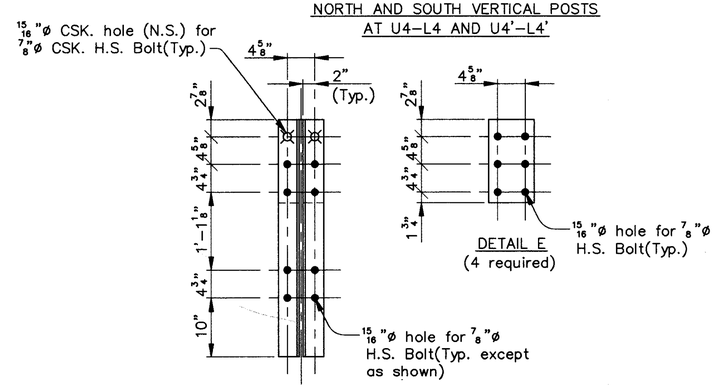

DETAIL E
(4 required)

VIEW D–D

Notes:
(E.S.) denotes Each Side.
(N.S.) denotes Near Side.

COUNTY BRIDGE NO. 84

HOWARD NEEDLES TAMMEN & BERGENDOFF
ARCHITECTS ENGINEERS PLANNERS
HNTB

REPAIR OF VERTICAL MEMBERS AT FLOORBEAMS
BR. NO. CUY – 6 – 1499
REHABILITATION OF
VETERANS MEMORIAL BRIDGE
(U.S. 6, 20, 42 & S.R. 3 OVER CUYAHOGA RIVER)
CLEVELAND CUYAHOGA COUNTY OHIO

DRAWN J.L.V.	TRACED J.L.V.	CHECKED A.D.Y.	REVIEWED C.A.B.	REVISED
DATE 8/11/93	DATE 8/11/93	DATE 11/16/93	DATE 4/05/94	SHEET 148/270

\11646\VERT3.DWG

FHWA REGION	STATE	PROJECT	
5	OHIO		

281/412

CUYAHOGA COUNTY
CUY – 6 – 14.99

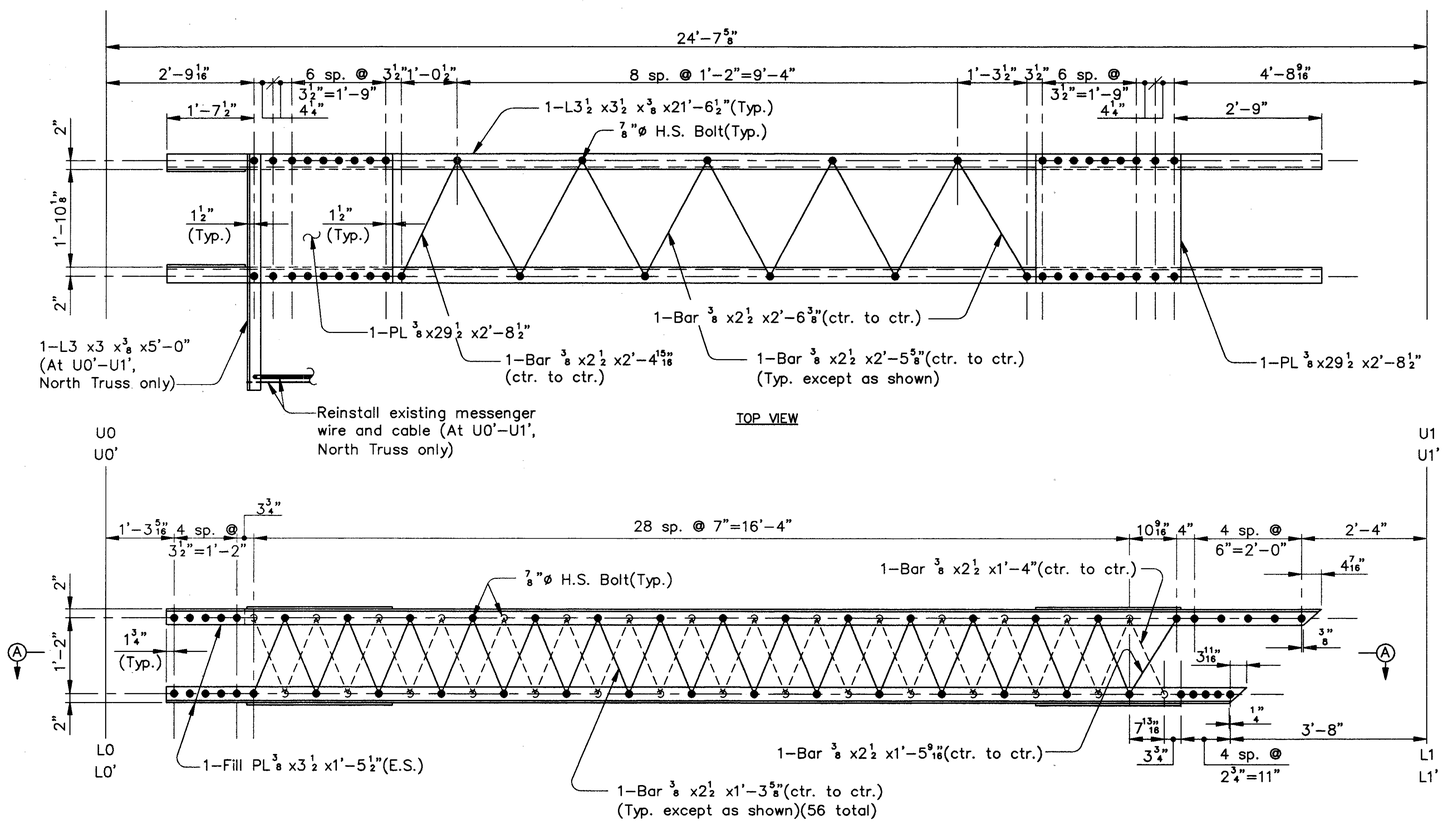

TOP VIEW

ELEVATION
(L 3 x 3 x 3/8 x 5'-0" for cable not shown)

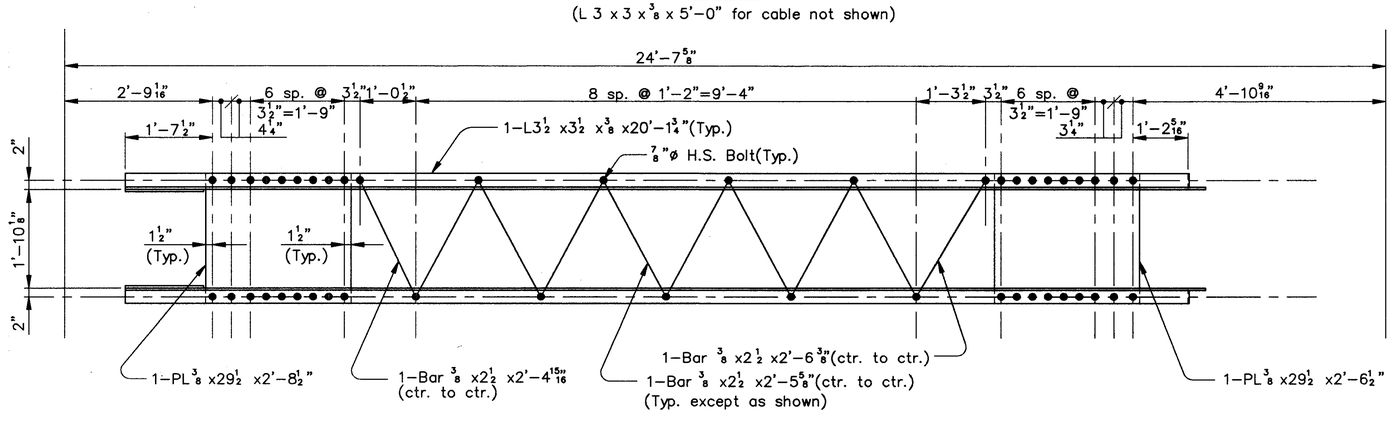

SECTION A–A

ARCH BRACE A
(4 Required)

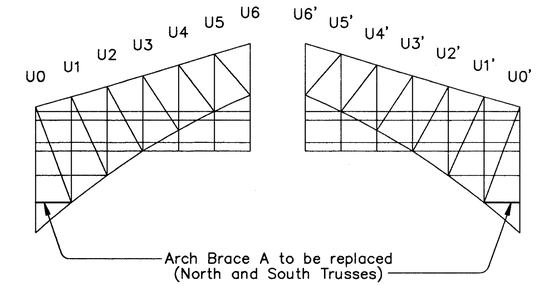

SCHEMATIC ELEVATION

Note:
(E.S.) denotes Each Side.

COUNTY BRIDGE NO. 84

HOWARD NEEDLES TAMMEN & BERGENDOFF
ARCHITECTS ENGINEERS PLANNERS
HNTB

REPLACEMENT–ARCH BRACES
BR. NO. CUY – 6 – 1499
REHABILITATION OF
VETERANS MEMORIAL BRIDGE
(U.S. 6, 20, 42 & S.R. 3 OVER CUYAHOGA RIVER)

CLEVELAND CUYAHOGA COUNTY OHIO

DRAWN J.L.V.	TRACED J.L.V.	CHECKED A.D.Y.	REVIEWED C.A.B.	REVISED
DATE 6/26/92	DATE 6/26/92	DATE 7/09/92	DATE 4/05/94	SHEET 149/270

\11646\ABRACE1.DWG

FHWA REGION	STATE	PROJECT	
5	OHIO		

282/412

CUYAHOGA COUNTY
CUY – 6 – 14.99

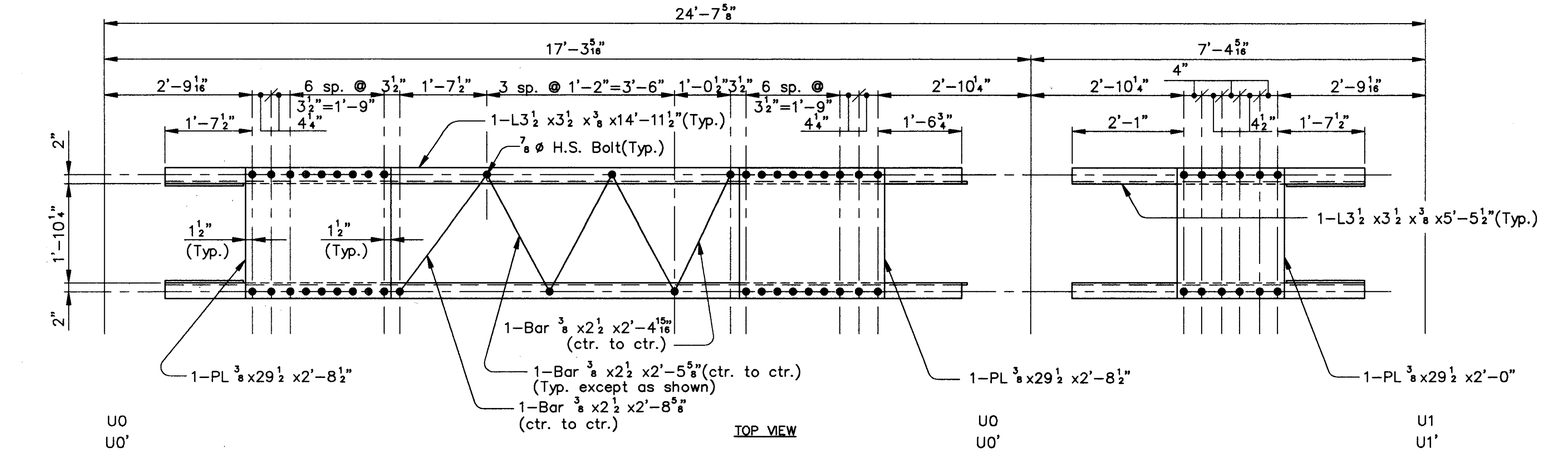

TOP VIEW

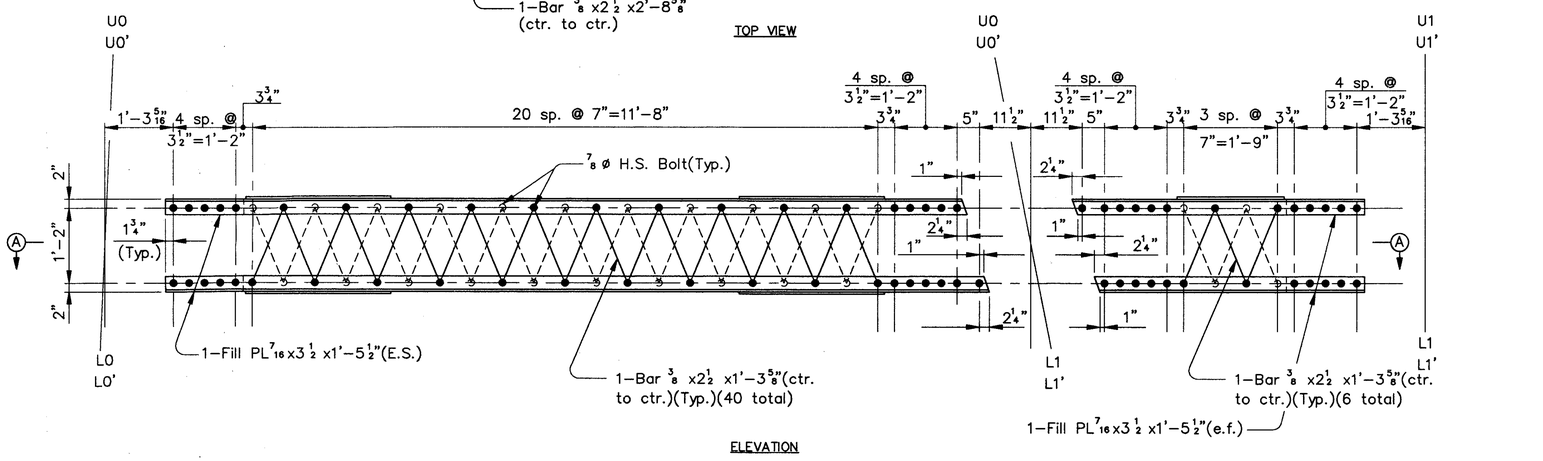

ELEVATION

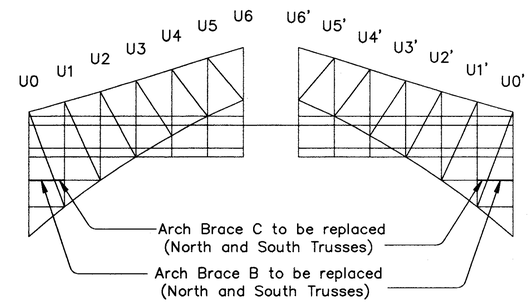

SCHEMATIC ELEVATION

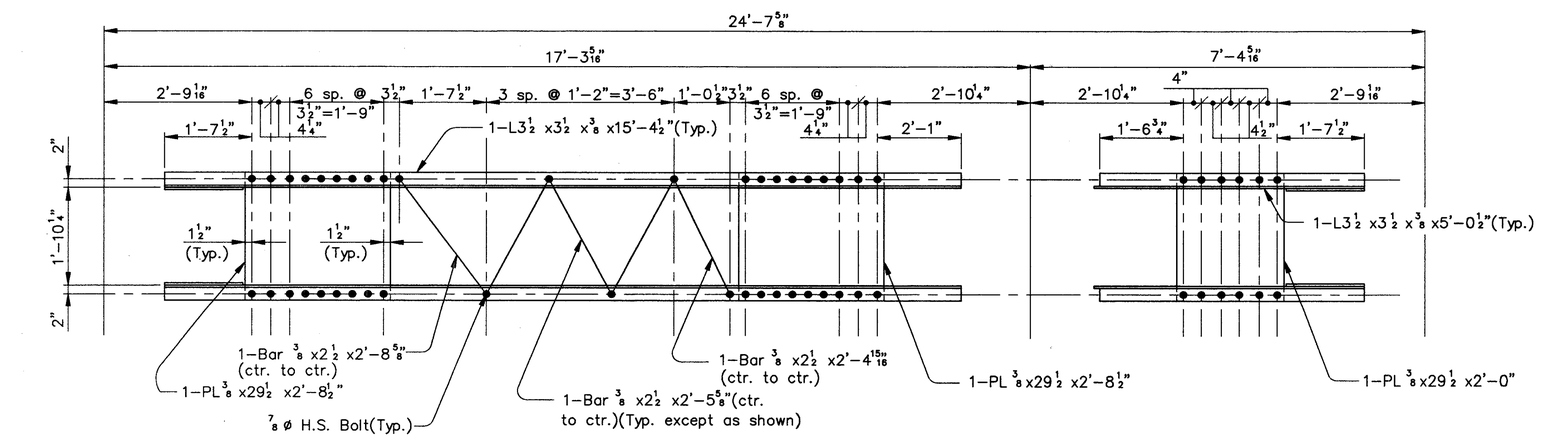

SECTION A–A

ARCH BRACE B
(4 Required)

ARCH BRACE C
(4 Required)

Note:
(E.S.) denotes Each Side.

COUNTY BRIDGE NO. 84

HOWARD NEEDLES TAMMEN & BERGENDOFF
ARCHITECTS ENGINEERS PLANNERS
HNTB

REPLACEMENT–ARCH BRACES
BR. NO. CUY – 6 – 1499
REHABILITATION OF
VETERANS MEMORIAL BRIDGE
(U.S. 6, 20, 42 & S.R. 3 OVER CUYAHOGA RIVER)

CLEVELAND CUYAHOGA COUNTY OHIO

DRAWN	TRACED	CHECKED	REVIEWED	REVISED
J.L.V.	J.L.V.	A.D.Y.	C.A.B.	
DATE 6/26/92	DATE 6/26/92	DATE 7/07/92	DATE 4/05/94	SHEET 150/270

\11646\ABRACE2.DWG

FHWA REGION	STATE	PROJECT	
5	OHIO		

283/412

CUYAHOGA COUNTY
CUY – 6 – 14.99

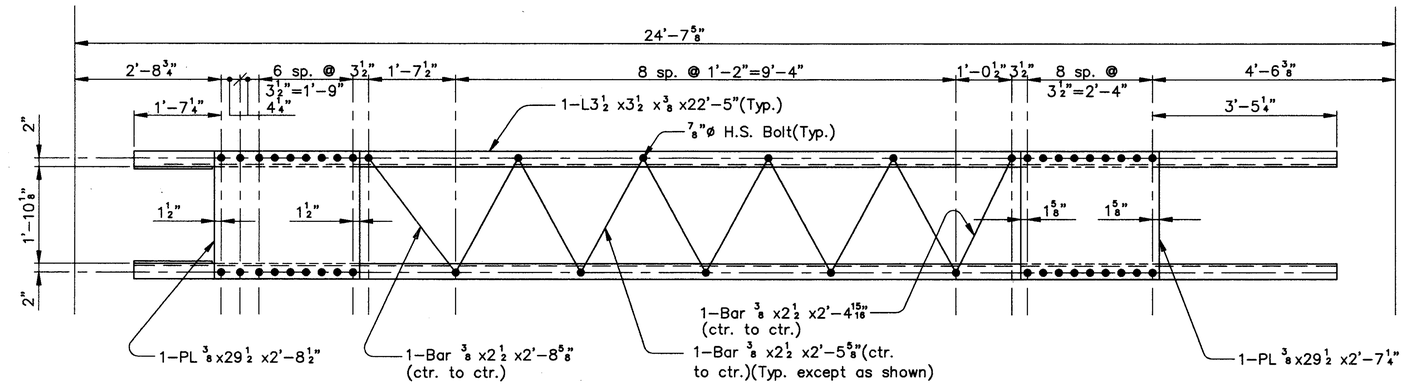

TOP VIEW

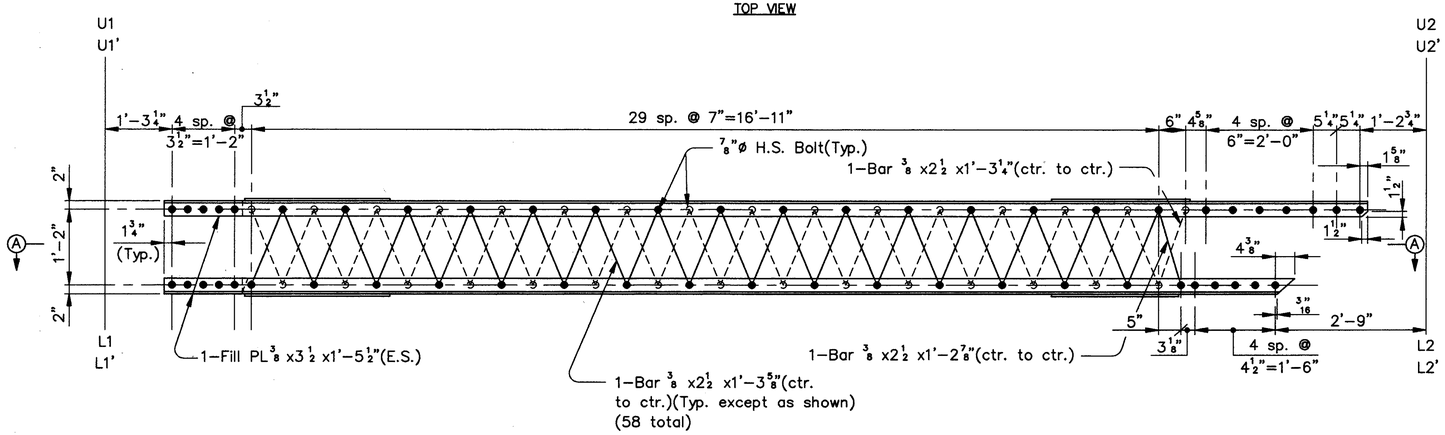

ELEVATION

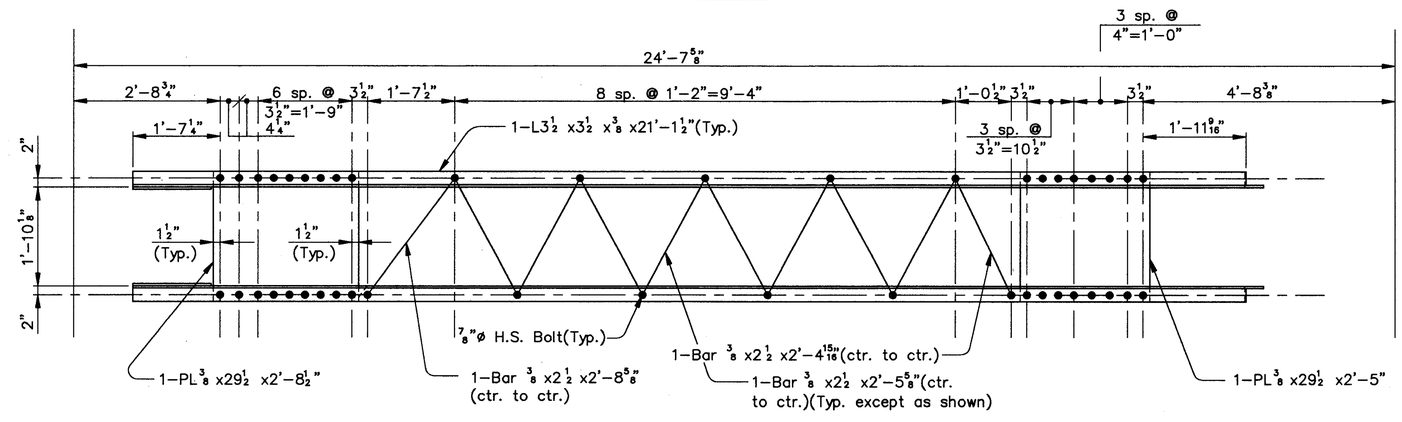

SECTION A–A

ARCH BRACE D
(4 Required)

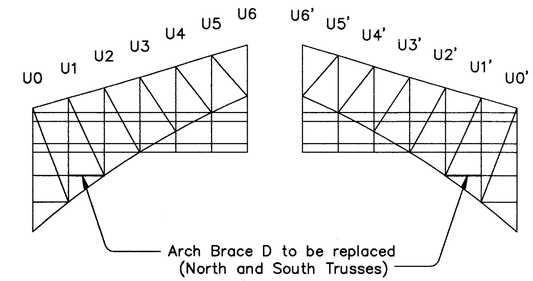

SCHEMATIC ELEVATION

Note:
(E.S.) denotes Each Side.

COUNTY BRIDGE NO. 84

HOWARD NEEDLES TAMMEN & BERGENDOFF
ARCHITECTS ENGINEERS PLANNERS
HNTB

REPLACEMENT–ARCH BRACES
BR. NO. CUY – 6 – 1499
REHABILITATION OF
VETERANS MEMORIAL BRIDGE
(U.S. 6, 20, 42 & S.R. 3 OVER CUYAHOGA RIVER)

CLEVELAND CUYAHOGA COUNTY OHIO

DRAWN	TRACED	CHECKED	REVIEWED	REVISED
J.L.V.	J.L.V.	A.D.Y.	C.A.B.	
DATE 6/26/92	DATE 6/26/92	DATE 7/09/92	DATE 4/06/94	SHEET 151/270

\11646\ABRACE3.DWG

FHWA REGION	STATE	PROJECT	
5	OHIO		

284/412

CUYAHOGA COUNTY
CUY – 6 – 14.99

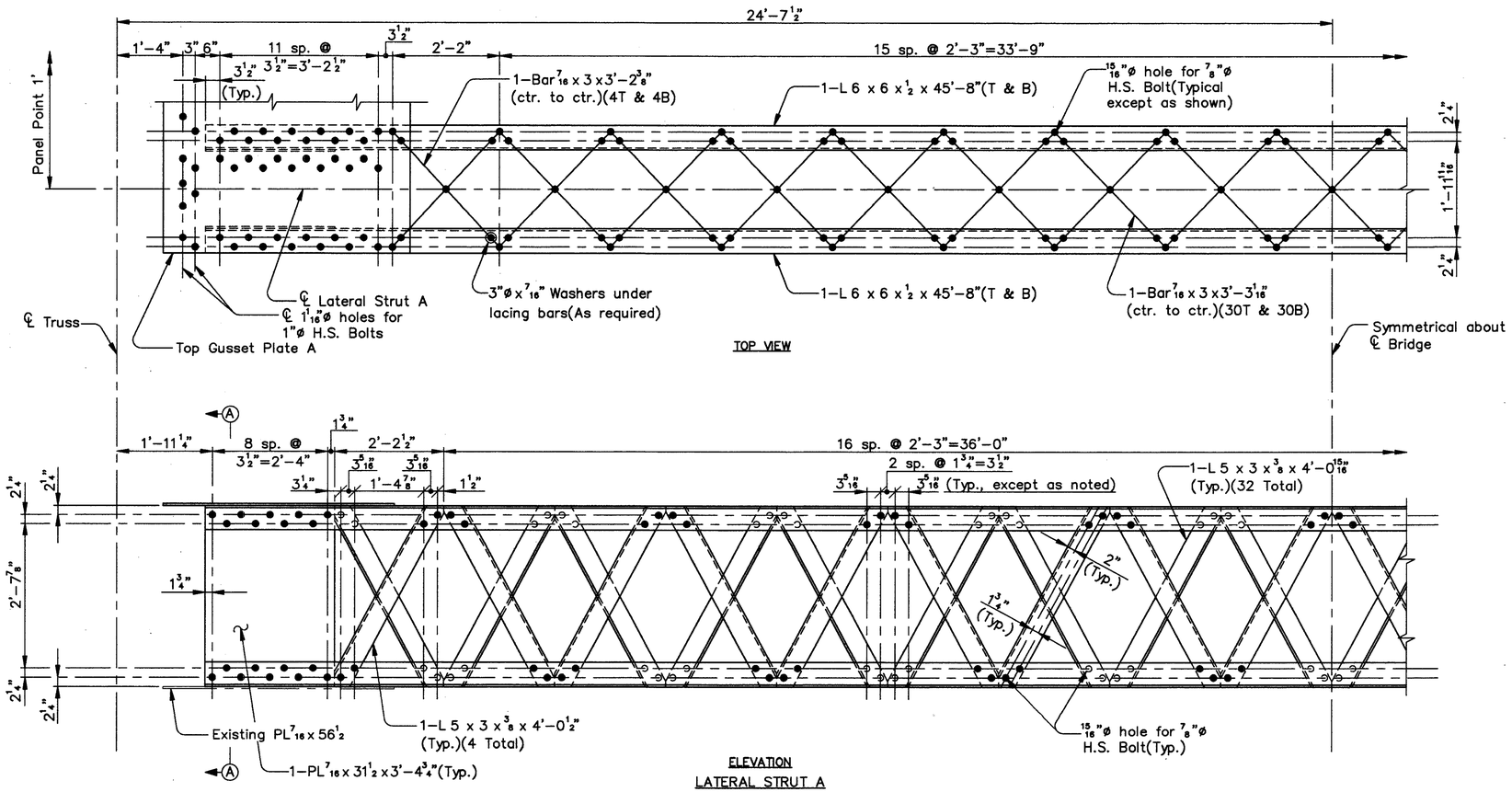

TOP VIEW

ELEVATION
LATERAL STRUT A

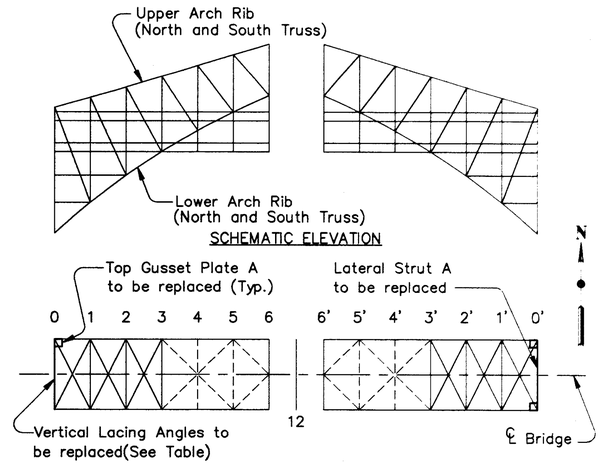

SCHEMATIC – LOWER ARCH RIBS FRAMING PLAN

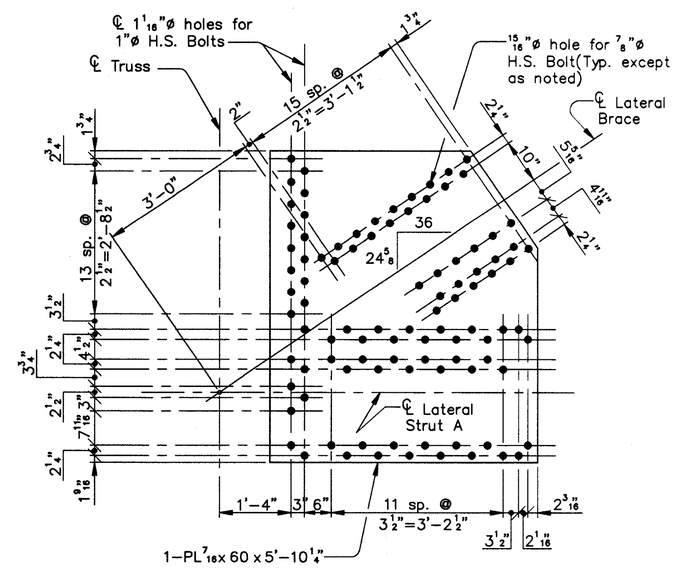

TOP GUSSET PLATE A
(3 required)

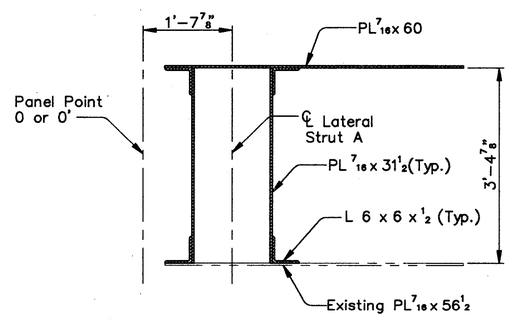

SECTION A–A

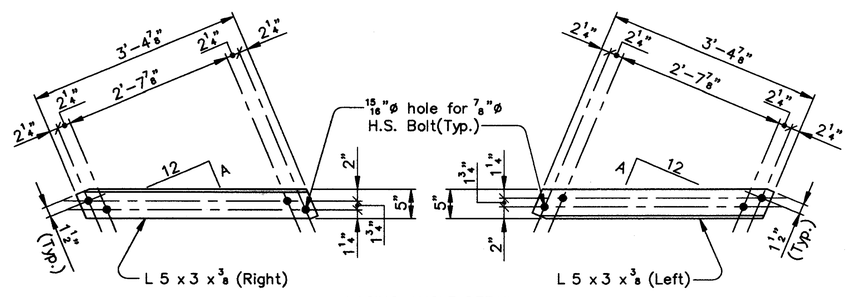

LACING ANGLE DETAIL

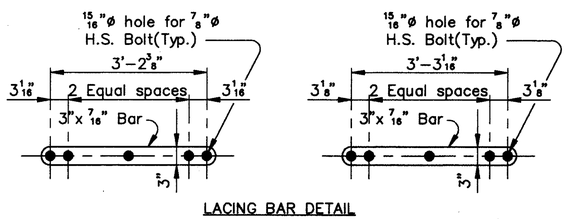

LACING BAR DETAIL

ADDITIONAL VERTICAL LACING ANGLE REPLACEMENT LOCATIONS FOR LOWER CHORD LATERAL STRUT					
LATERAL STRUT	PANEL POINT	ORIENTATION	NO.	A	LENGTH
A	0	West Face–Right	1	7 3/32	4'–0 1/2"
A	0	West Face–Left	1	7 3/32	4'–0 1/2"
A	0	East Face–Right	1	7 3/32	4'–0 1/2"
A	0	East Face–Left	1	7 3/32	4'–0 1/2"

Note:
Angles to be replaced will be marked in the field by the Engineer.

Notes:
(T) denotes Top.
(B) denotes Bottom.

COUNTY BRIDGE NO. 84

HOWARD NEEDLES TAMMEN & BERGENDOFF
ARCHITECTS ENGINEERS PLANNERS
HNTB

LOWER CHORD LATERAL STRUT
REPLACEMENT DETAILS
BR. NO. CUY – 6 – 1499
REHABILITATION OF
VETERANS MEMORIAL BRIDGE
(U.S. 6, 20, 42 & S.R. 3 OVER CUYAHOGA RIVER)

CLEVELAND CUYAHOGA COUNTY OHIO

DRAWN J.L.V.	TRACED J.L.V.	CHECKED A.D.Y.	REVIEWED C.A.B.	REVISED
DATE 09/10/93	DATE 09/10/93	DATE 11/02/93	DATE 4/06/94	SHEET 152/270

\11646\LAOA.DWG

FHWA REGION	STATE	PROJECT	
5	OHIO		

285/412

CUYAHOGA COUNTY
CUY – 6 – 14.99

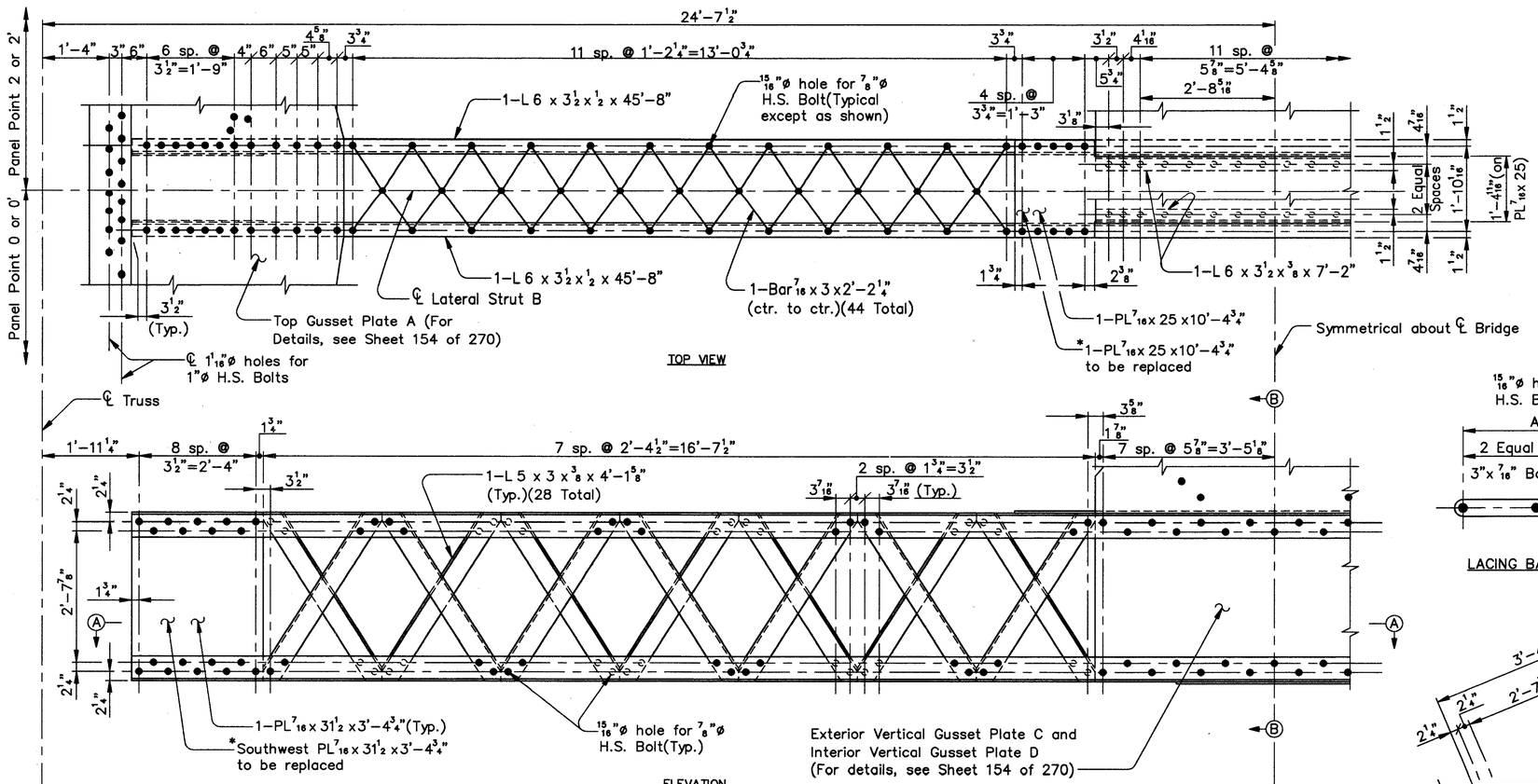

TOP VIEW

ELEVATION

(Top Gusset Plate A and Bottom Gusset Plate B not shown)

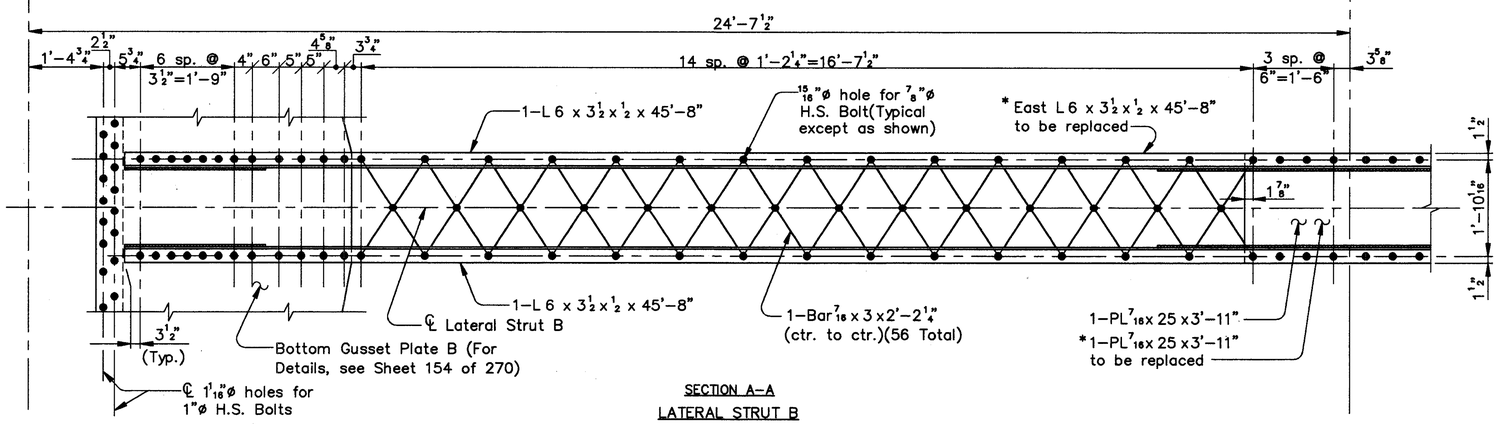

SECTION A–A
LATERAL STRUT B

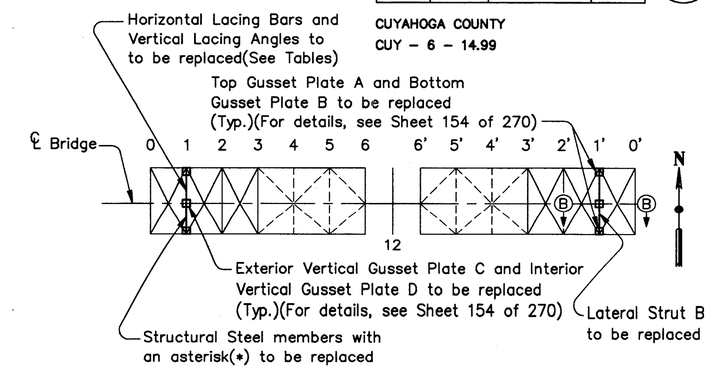

SCHEMATIC – LOWER ARCH RIBS FRAMING PLAN

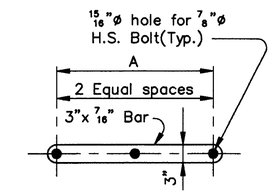

LACING BAR DETAIL

ADDITIONAL HORIZONTAL LACING BAR REPLACEMENT LOCATIONS FOR LOWER CHORD LATERAL STRUT					
LATERAL STRUT	PANEL POINT	ORIENTATION	NO.	A	LENGTH
B	1	Top	14	2'-2 1/4"	2'-5 1/4"
B	1	Bottom	21	2'-2 1/4"	2'-5 1/4"

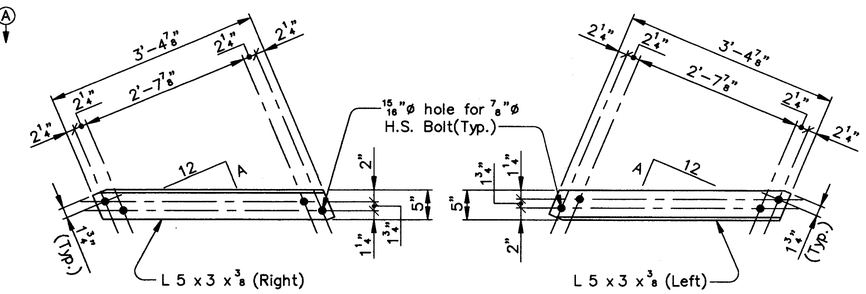

LACING ANGLE DETAIL

ADDITIONAL VERTICAL LACING ANGLE REPLACEMENT LOCATIONS FOR LOWER CHORD LATERAL STRUT					
LATERAL STRUT	PANEL POINT	ORIENTATION	NO.	A	LENGTH
B	1	East Face–Right	1	7 9/16	4'-1 5/8"
B	1	East Face–Left	1	7 9/16	4'-1 5/8"

Note:
Bars and angles to be replaced will be marked in the field by the Engineer.

Note:
For Section B–B, see Sheet 154 of 270.

COUNTY BRIDGE NO. 84

HOWARD NEEDLES TAMMEN & BERGENDOFF
ARCHITECTS ENGINEERS PLANNERS
HNTB

LOWER CHORD LATERAL STRUT REPLACEMENT DETAILS
BR. NO. CUY – 6 – 1499
REHABILITATION OF
VETERANS MEMORIAL BRIDGE
(U.S. 6, 20, 42 & S.R. 3 OVER CUYAHOGA RIVER)

CLEVELAND CUYAHOGA COUNTY OHIO

DRAWN	TRACED	CHECKED	REVIEWED	REVISED
J.L.V.	J.L.V.	A.D.Y.	C.A.B.	
DATE 09/07/93	DATE 09/07/93	DATE 11/02/93	DATE 4/06/94	SHEET 153/270

\11646\STEEL\LA1A.DWG

FHWA REGION	STATE	PROJECT	
5	OHIO		

286/412

CUYAHOGA COUNTY
CUY – 6 – 14.99

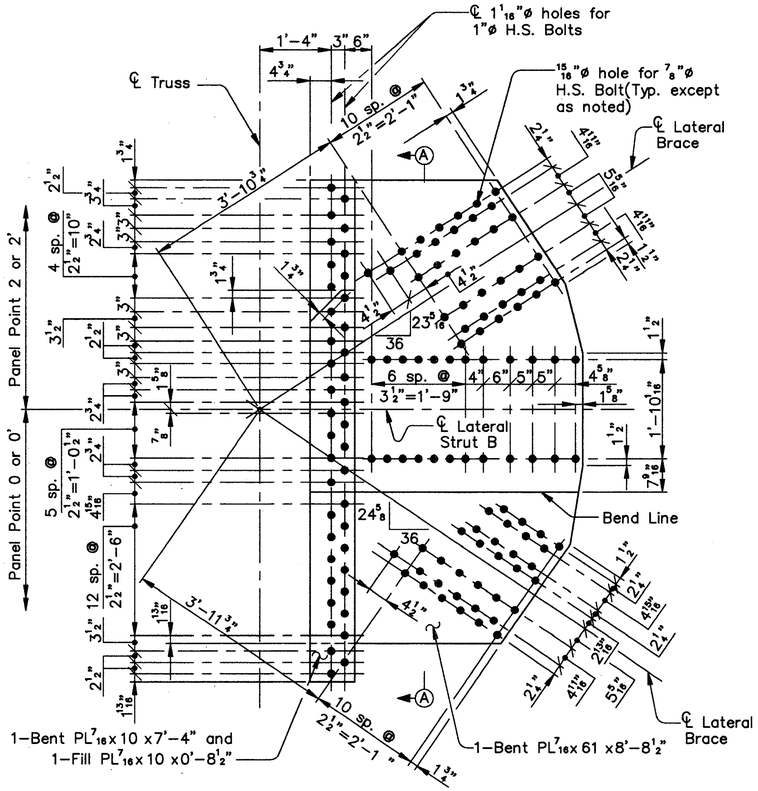

TOP GUSSET PLATE A
(Shown developed)
(2 Plates required as shown, 2 Plates required opposite hand)

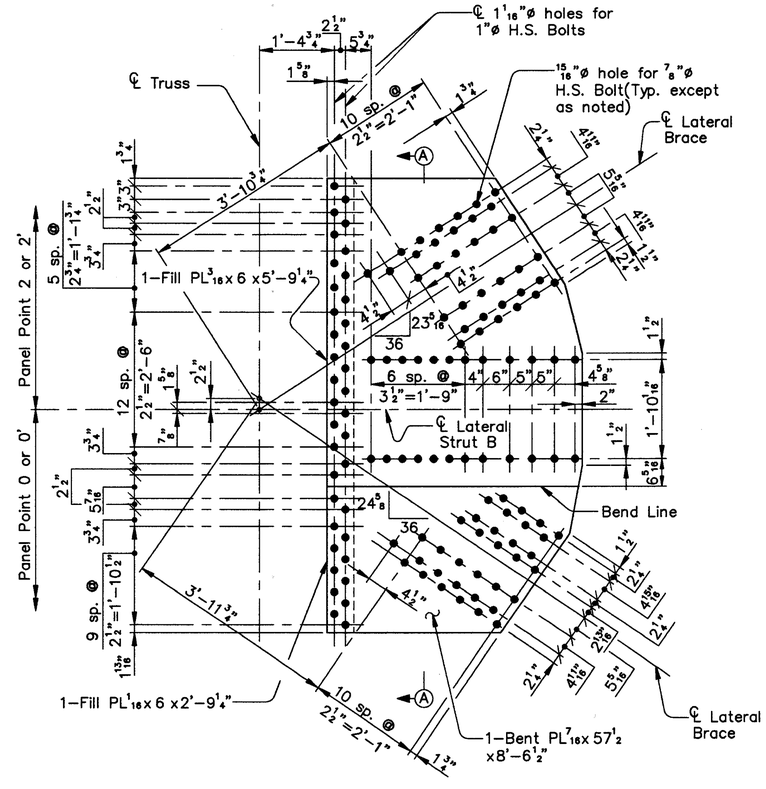

BOTTOM GUSSET PLATE B
(Shown developed)
(2 Plates required as shown, 2 Plates required opposite hand)

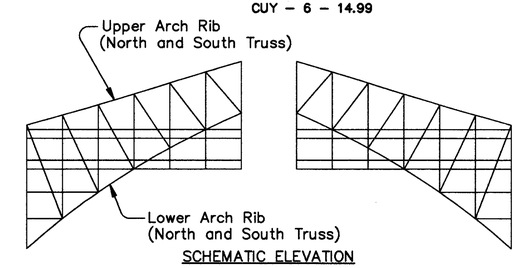

SCHEMATIC ELEVATION

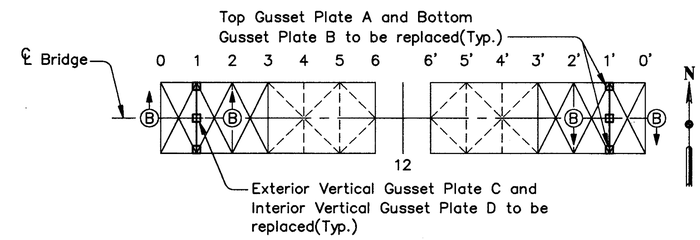

SCHEMATIC – LOWER ARCH RIBS FRAMING PLAN

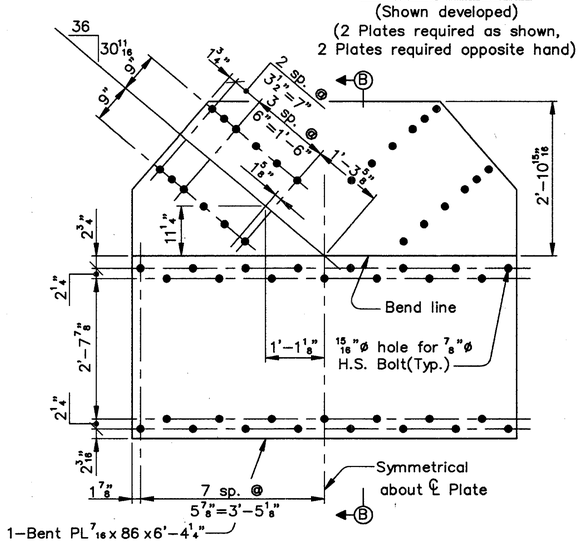

EXTERIOR VERTICAL GUSSET PLATE "C"
(Developed Elevation)
(2 Required)

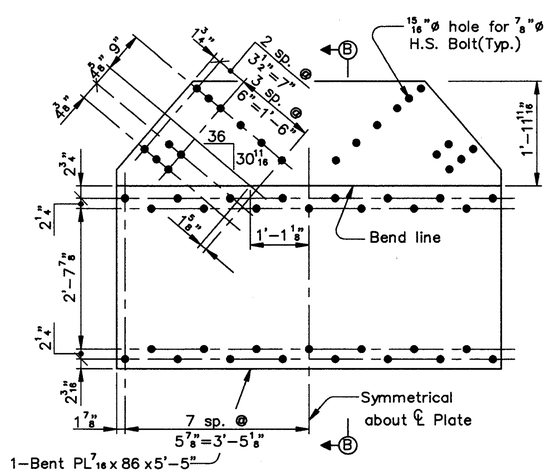

INTERIOR VERTICAL GUSSET PLATE "D"
(Developed Elevation)
(2 Required)

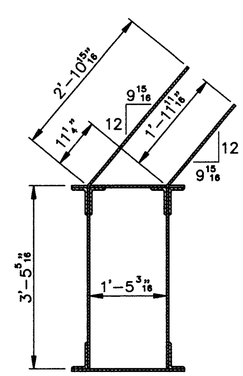

SECTION B–B

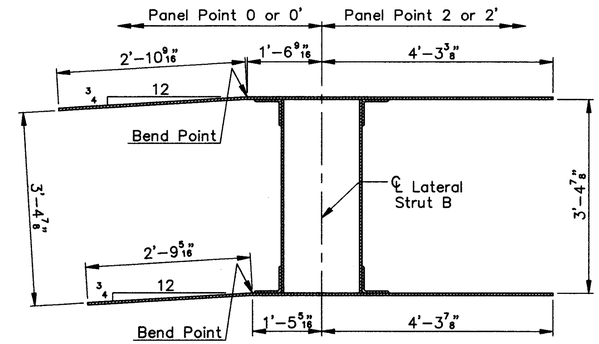

SECTION A–A

COUNTY BRIDGE NO. 84

HOWARD NEEDLES TAMMEN & BERGENDOFF
ARCHITECTS ENGINEERS PLANNERS
HNTB

LOWER CHORD LATERAL STRUT
REPLACEMENT DETAILS
BR. NO. CUY – 6 – 1499
REHABILITATION OF
VETERANS MEMORIAL BRIDGE
(U.S. 6, 20, 42 & S.R. 3 OVER CUYAHOGA RIVER)

CLEVELAND CUYAHOGA COUNTY OHIO

DRAWN J.L.V.	TRACED J.L.V.	CHECKED A.D.Y.	REVIEWED C.A.B.	REVISED
DATE 09/07/93	DATE 09/07/93	DATE 11/02/93	DATE 04/06/94	SHEET 154/270

\11646\LA1B.DWG

FHWA REGION	STATE	PROJECT	
5	OHIO		

287/412

CUYAHOGA COUNTY
CUY – 6 – 14.99

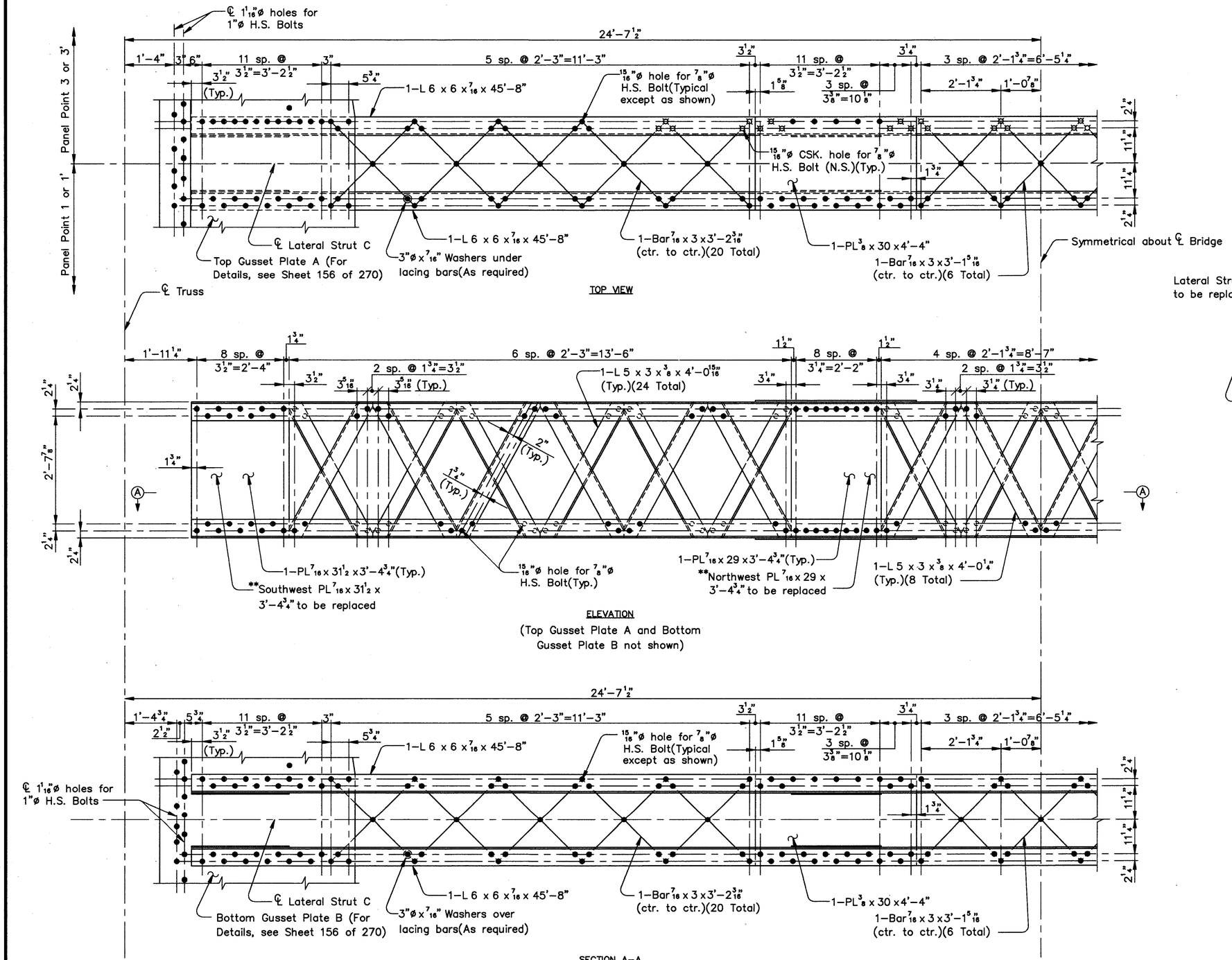

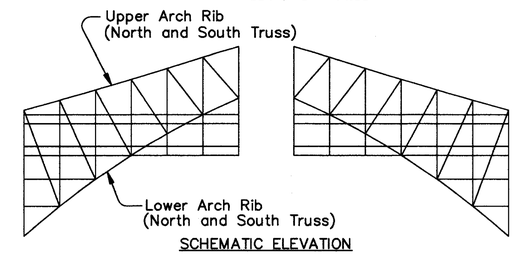

SCHEMATIC ELEVATION

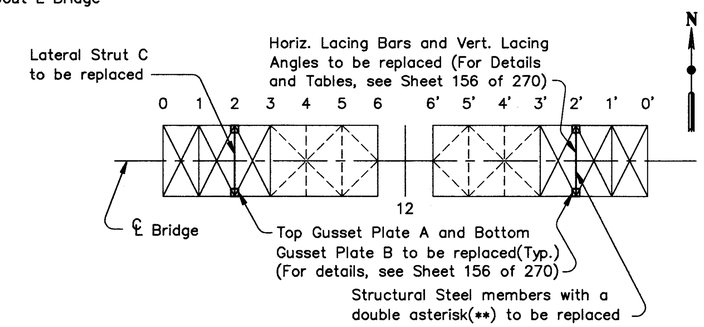

SCHEMATIC – LOWER ARCH RIBS FRAMING PLAN

Note:
(N.S.) denotes Near Side.

COUNTY BRIDGE NO. 84

HOWARD NEEDLES TAMMEN & BERGENDOFF
ARCHITECTS ENGINEERS PLANNERS
HNTB

LOWER CHORD LATERAL STRUT REPLACEMENT DETAILS
BR. NO. CUY – 6 – 1499
REHABILITATION OF VETERANS MEMORIAL BRIDGE
(U.S. 6, 20, 42 & S.R. 3 OVER CUYAHOGA RIVER)
CLEVELAND CUYAHOGA COUNTY OHIO

DRAWN J.L.V.	TRACED J.L.V.	CHECKED A.D.Y.	REVIEWED C.A.B.	REVISED
DATE 09/07/93	DATE 09/07/93	DATE 11/03/93	DATE 4/06/94	SHEET 155/270

\11646\STEEL\LA2A.DWG

FHWA REGION	STATE	PROJECT	
5	OHIO		

288/412

CUYAHOGA COUNTY
CUY – 6 – 14.99

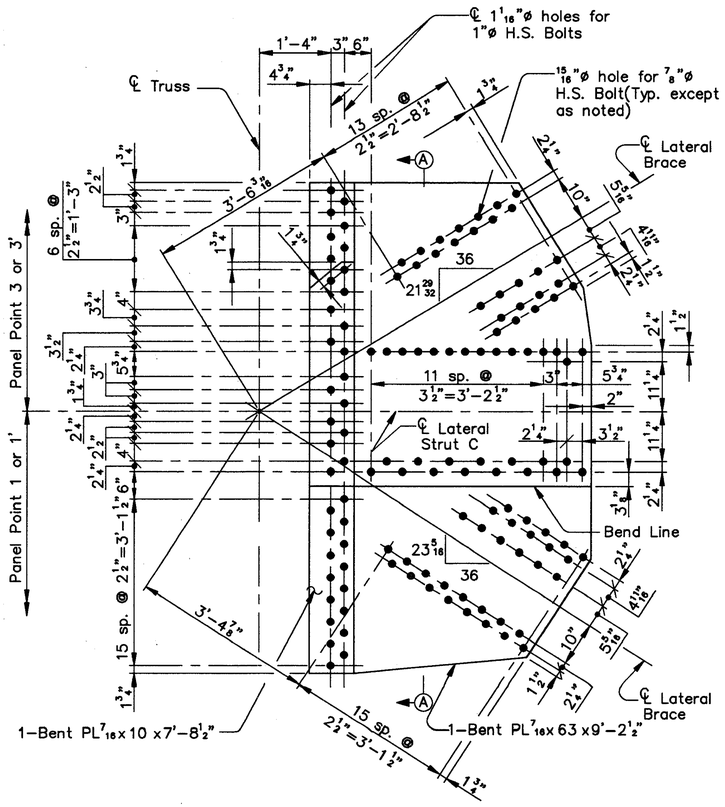

TOP GUSSET PLATE A
(Shown developed)
(2 Plates required as shown,
2 Plates required opposite hand)

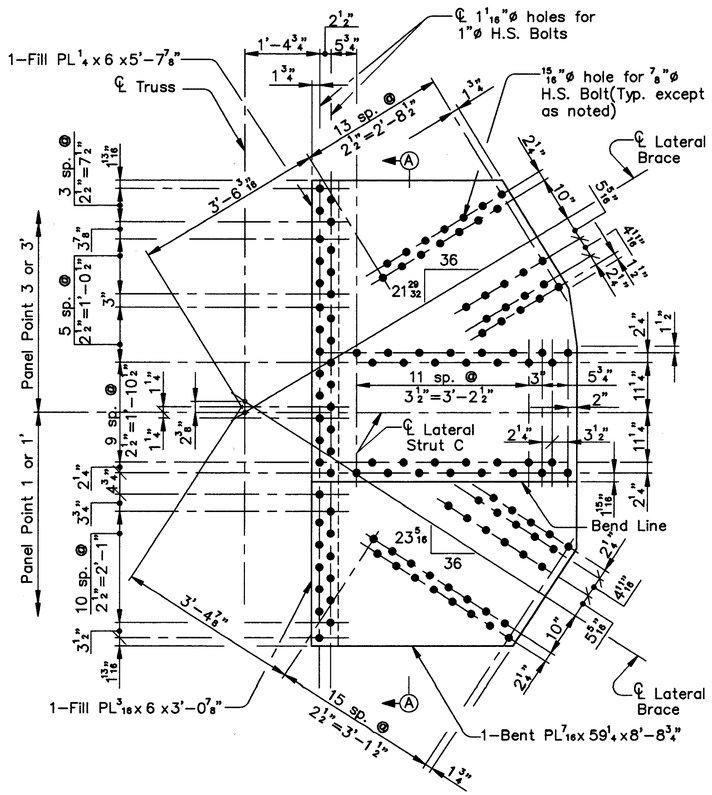

BOTTOM GUSSET PLATE B
(Shown developed)
(2 Plates required as shown,
2 Plates required opposite hand)

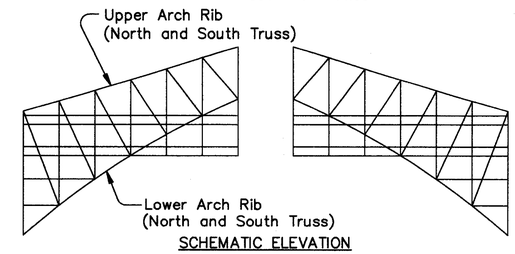

SCHEMATIC ELEVATION

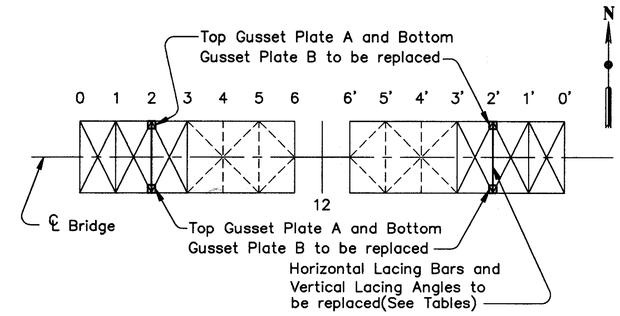

SCHEMATIC – LOWER ARCH RIBS FRAMING PLAN

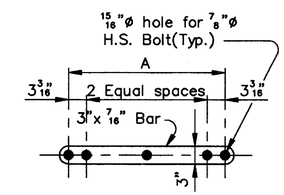

LACING BAR DETAIL

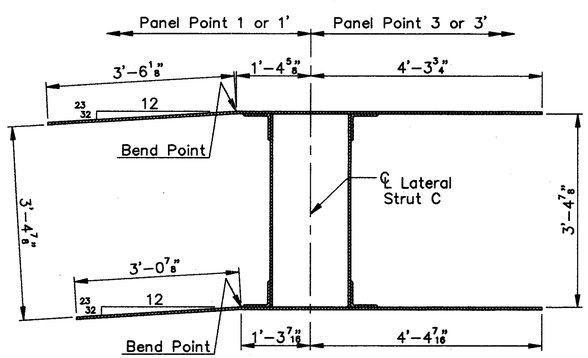

SECTION A–A

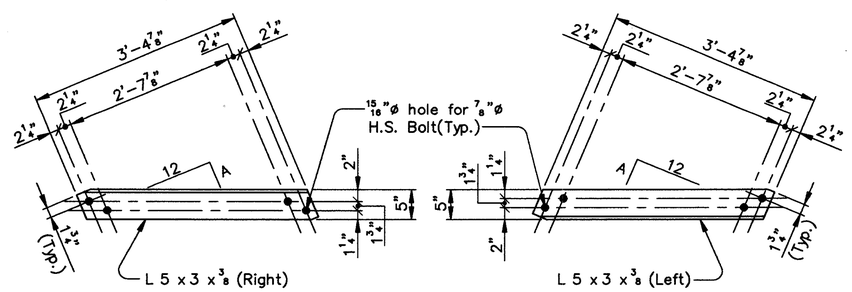

LACING ANGLE DETAIL

ADDITIONAL VERTICAL LACING ANGLE REPLACEMENT LOCATIONS FOR LOWER CHORD LATERAL STRUT					
LATERAL STRUT	PANEL POINT	ORIENTATION	NO.	A	LENGTH
C	2'	West Face–Right	5	7 3/32	4'–0 15/16"
C	2'	West Face–Left	5	7 3/32	4'–0 15/16"
C	2'	West Face–Right	1	6 11/16	4'–0 1/4"
C	2'	West Face–Left	1	6 11/16	4'–0 1/4"

ADDITIONAL HORIZONTAL LACING BAR REPLACEMENT LOCATIONS FOR LOWER CHORD LATERAL STRUT					
LATERAL STRUT	PANEL POINT	ORIENTATION	NO.	A	LENGTH
C	2'	Top	6	3'–2 3/16"	3'–5 3/16"
C	2'	Bottom	10	3'–2 3/16"	3'–5 3/16"

Note:
Bars and angles to be replaced will be marked in the field by the Engineer.

COUNTY BRIDGE NO. 84

HOWARD NEEDLES TAMMEN & BERGENDOFF
ARCHITECTS ENGINEERS PLANNERS
HNTB

LOWER CHORD LATERAL STRUT
REPLACEMENT DETAILS
BR. NO. CUY – 6 – 1499
REHABILITATION OF
VETERANS MEMORIAL BRIDGE
(U.S. 6, 20, 42 & S.R. 3 OVER CUYAHOGA RIVER)

CLEVELAND CUYAHOGA COUNTY OHIO

DRAWN J.L.V.	TRACED J.L.V.	CHECKED A.D.Y.	REVIEWED C.A.B.	REVISED
DATE 09/07/93	DATE 09/07/93	DATE 11/03/93	DATE 4/06/94	SHEET 156/270

\11646\STEEL\LA2B.DWG

FHWA REGION	STATE	PROJECT	
5	OHIO		

289/412

CUYAHOGA COUNTY
CUY – 6 – 14.99

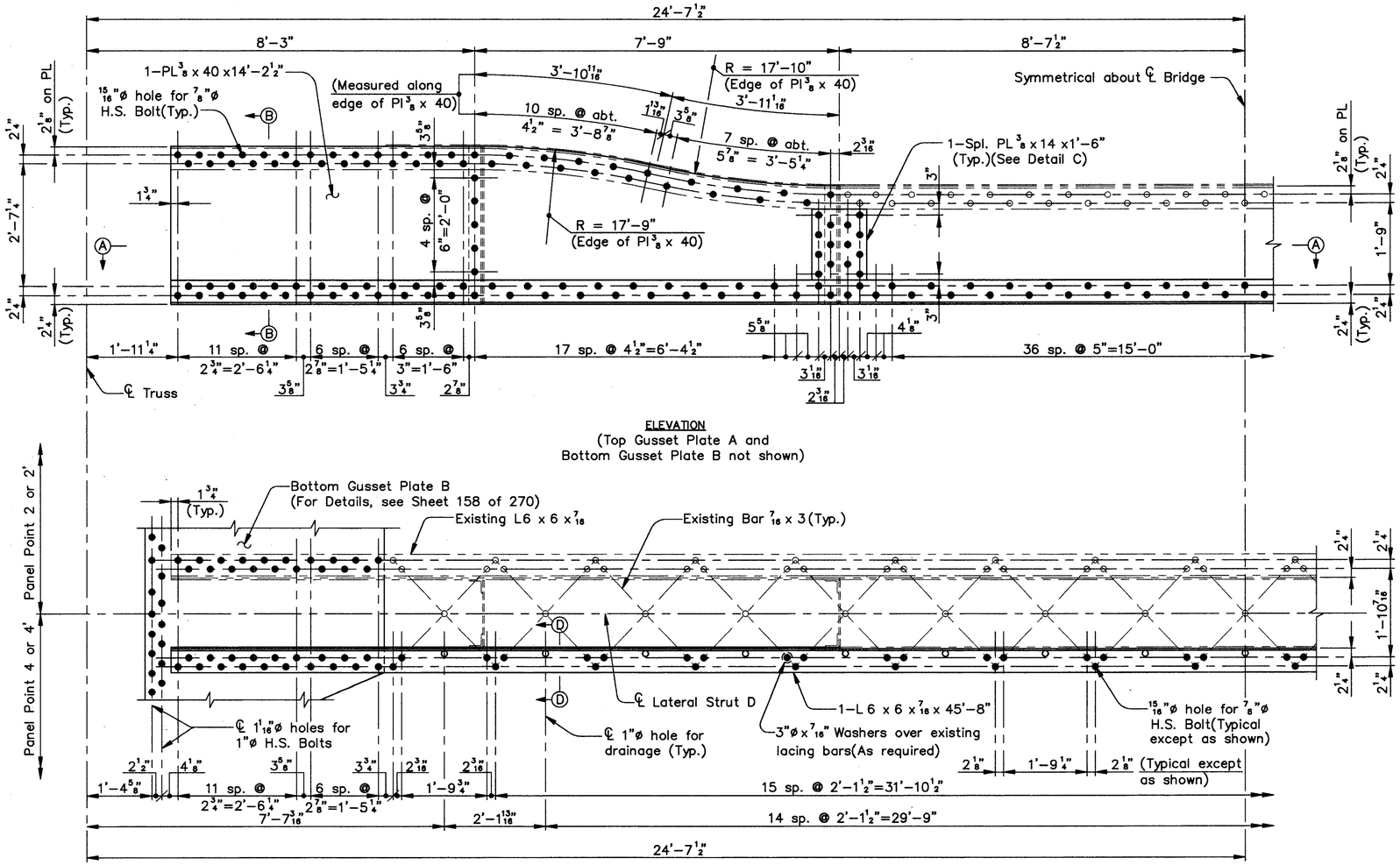

ELEVATION
(Top Gusset Plate A and Bottom Gusset Plate B not shown)

SECTION A–A
LATERAL STRUT D

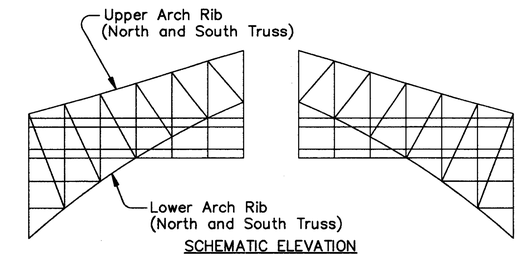

SCHEMATIC ELEVATION

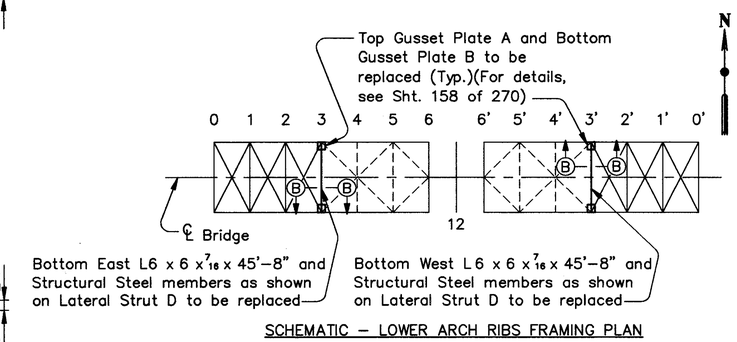

SCHEMATIC – LOWER ARCH RIBS FRAMING PLAN

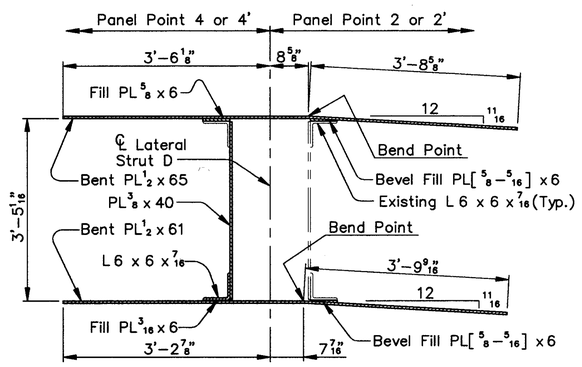

SECTION B–B
(Fill PL 3/8 x 7, Fill PL 3/8 x 7 1/2, and PL 3/8 x 10 not shown)

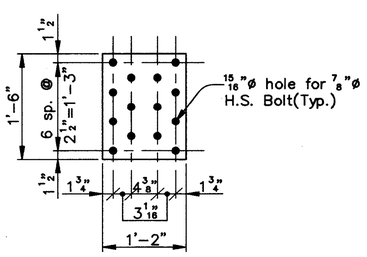

DETAIL C
(8 Required)

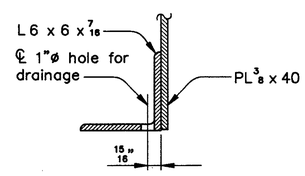

SECTION D–D

COUNTY BRIDGE NO. 84

HOWARD NEEDLES TAMMEN & BERGENDOFF
ARCHITECTS ENGINEERS PLANNERS
HNTB

LOWER CHORD LATERAL STRUT REPLACEMENT DETAILS
BR. NO. CUY – 6 – 1499
REHABILITATION OF
VETERANS MEMORIAL BRIDGE
(U.S. 6, 20, 42 & S.R. 3 OVER CUYAHOGA RIVER)
CLEVELAND CUYAHOGA COUNTY OHIO

DRAWN J.L.V.	TRACED J.L.V.	CHECKED A.D.Y.	REVIEWED C.A.B.	REVISED
DATE 08/25/93	DATE 08/25/93	DATE 11/03/93	DATE 4/06/94	SHEET 157/270

\11646\STEEL\LA3A.DWG

FHWA REGION	STATE	PROJECT	
5	OHIO		

290 / 412

CUYAHOGA COUNTY
CUY – 6 – 14.99

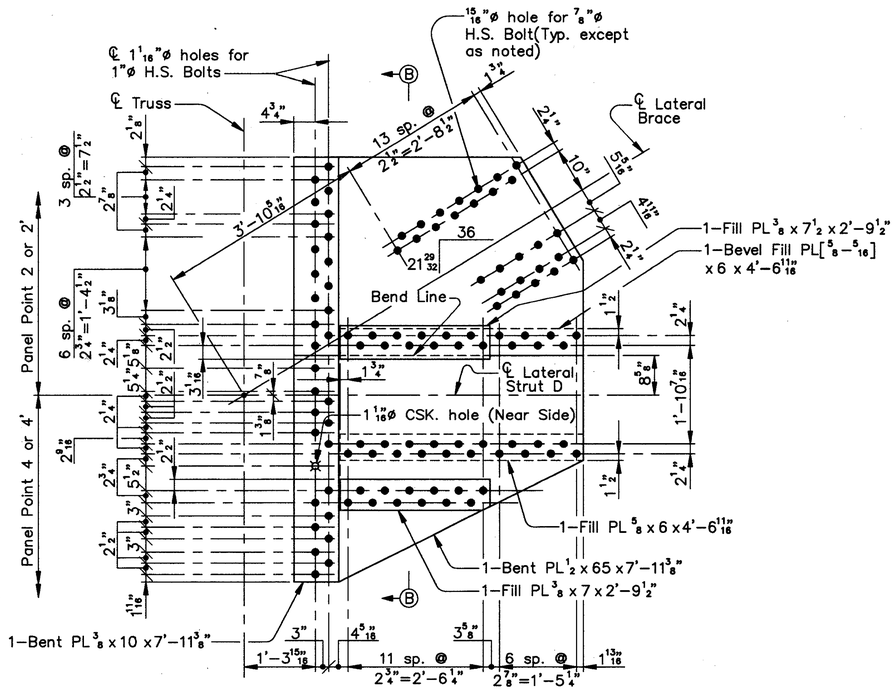

TOP GUSSET PLATE A
(Shown developed)
(2 Plates required as shown,
2 Plates required opposite hand)

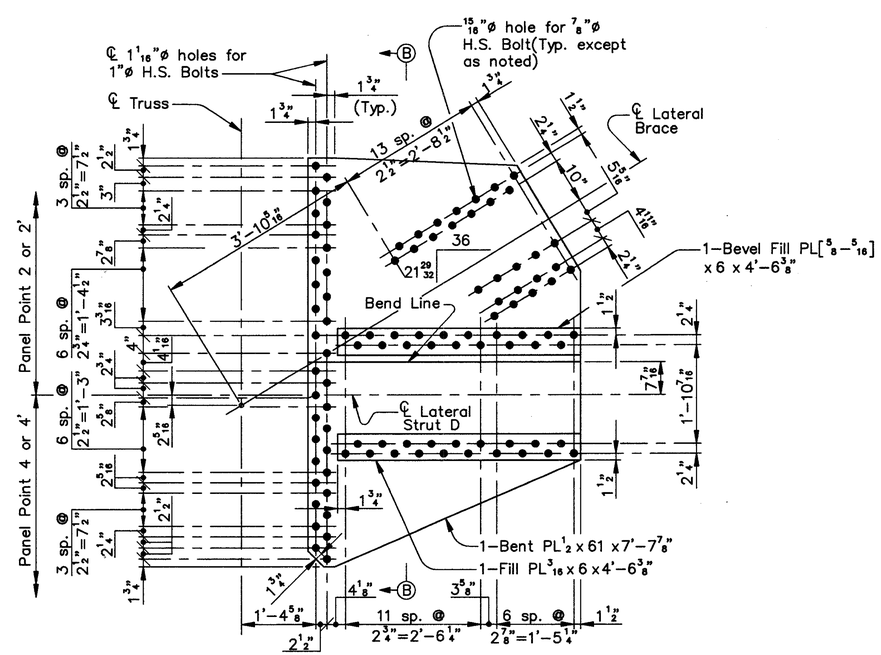

BOTTOM GUSSET PLATE B
(Shown developed)
(2 Plates required as shown,
2 Plates required opposite hand)

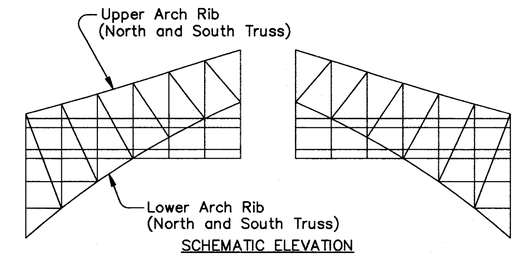

SCHEMATIC ELEVATION

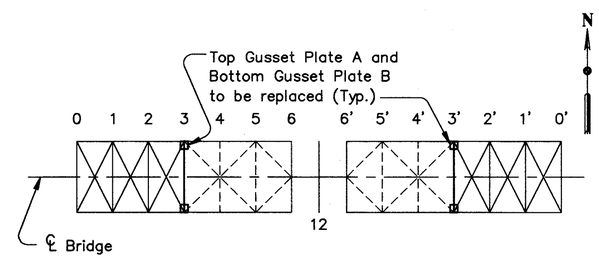

SCHEMATIC – LOWER ARCH RIBS FRAMING PLAN

Note:
For Section B–B, see Sheet 157 of 270.

COUNTY BRIDGE NO. 84

HOWARD NEEDLES TAMMEN & BERGENDOFF
ARCHITECTS ENGINEERS PLANNERS
HNTB

LOWER CHORD LATERAL STRUT
REPLACEMENT DETAILS
BR. NO. CUY – 6 – 1499
REHABILITATION OF
VETERANS MEMORIAL BRIDGE
(U.S. 6, 20, 42 & S.R. 3 OVER CUYAHOGA RIVER)
CLEVELAND CUYAHOGA COUNTY OHIO

DRAWN	TRACED	CHECKED	REVIEWED	REVISED
J.L.V.	J.L.V.	A.D.Y.	C.A.B.	
DATE 09/09/93	DATE 09/09/93	DATE 11/03/93	DATE 04/06/94	SHEET 158/270

\11646\STEEL\LA3B.DWG

FHWA REGION	STATE	PROJECT	
5	OHIO		

291 / 412

CUYAHOGA COUNTY
CUY – 6 – 14.99

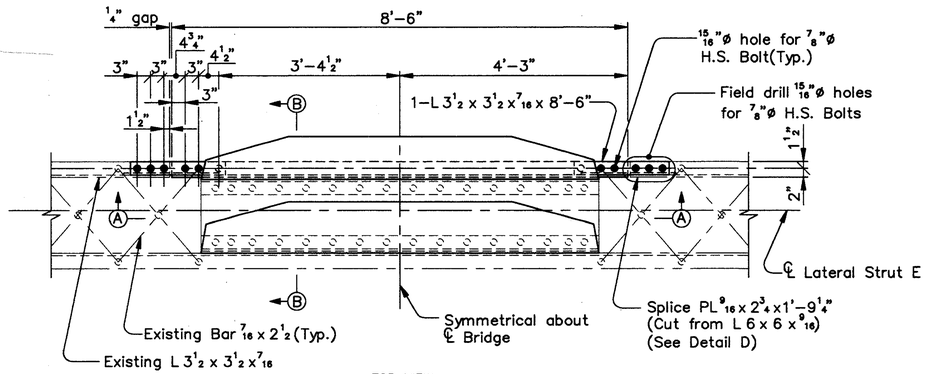

TOP VIEW

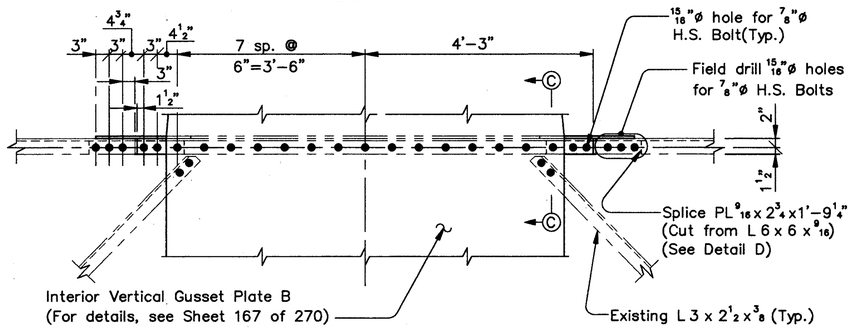

SECTION A–A
LATERAL STRUT E

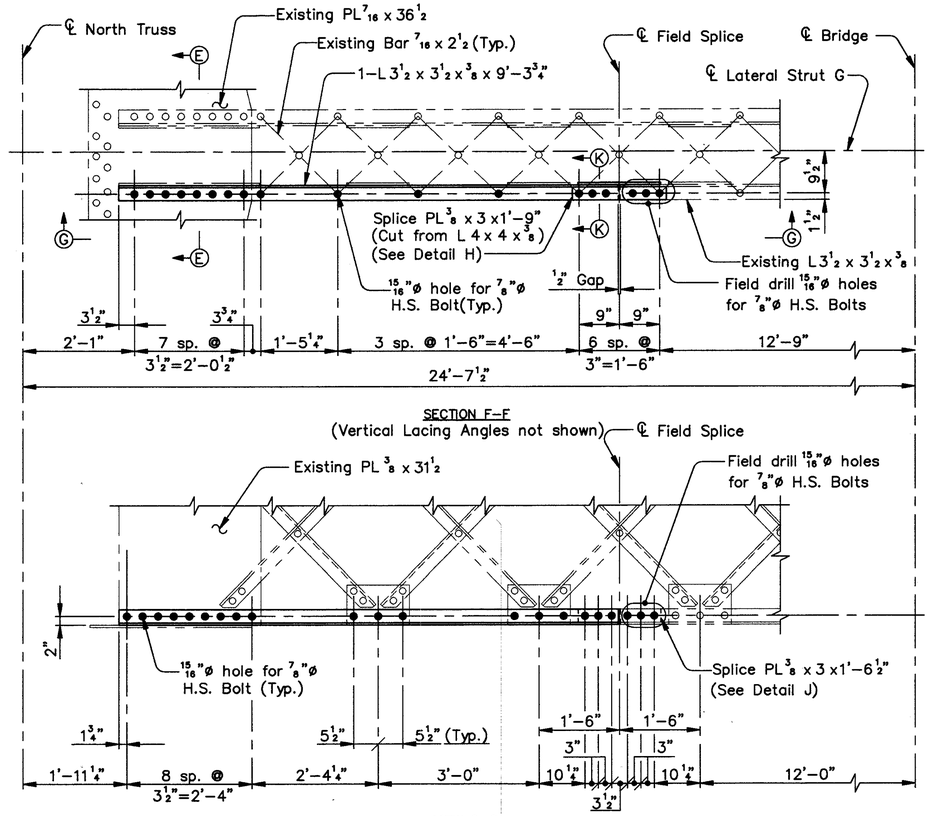

SECTION F–F
(Vertical Lacing Angles not shown)

VIEW G–G
LATERAL STRUT G

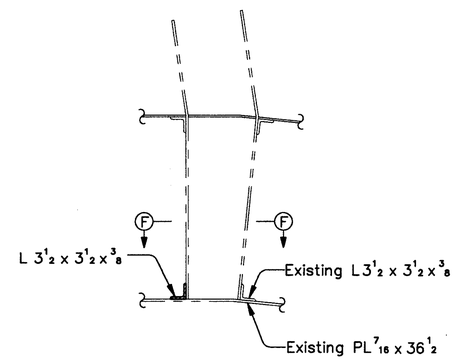

SECTION E–E

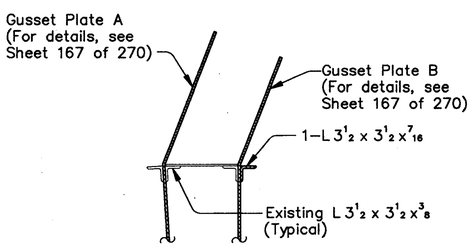

SECTION B–B

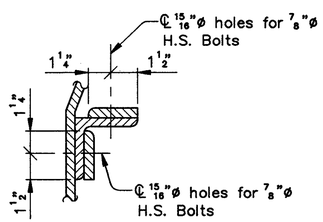

SECTION C–C

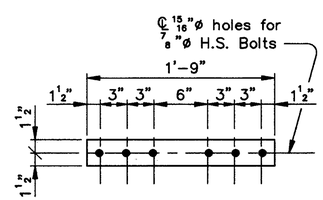

DETAIL H
(1 Required)

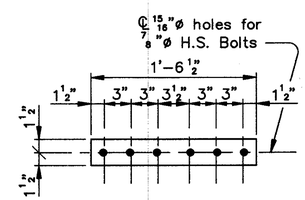

DETAIL J
(1 Required)

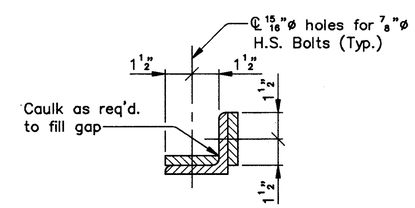

SECTION K–K

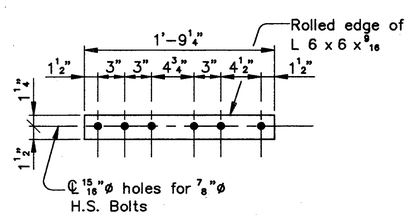

DETAIL D
(8 Required)

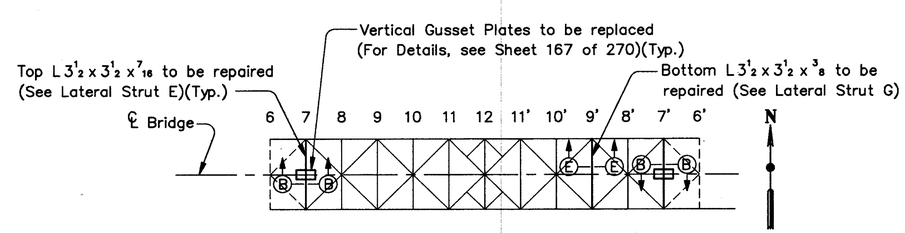

SCHEMATIC – LOWER ARCH RIBS FRAMING PLAN

COUNTY BRIDGE NO. 84

HOWARD NEEDLES TAMMEN & BERGENDOFF
ARCHITECTS ENGINEERS PLANNERS
HNTB

LOWER CHORD LATERAL STRUT
REPAIR DETAILS
BR. NO. CUY – 6 – 1499
REHABILITATION OF
VETERANS MEMORIAL BRIDGE
(U.S. 6, 20, 42 & S.R. 3 OVER CUYAHOGA RIVER)

CLEVELAND CUYAHOGA COUNTY OHIO

DRAWN	TRACED	CHECKED	REVIEWED	REVISED
J.L.V.	J.L.V.	A.D.Y.	C.A.B.	
DATE 09/23/93	DATE 09/23/93	DATE 11/05/93	DATE 4/08/94	SHEET 159/270

\11646\STEEL\LA7A.DWG

FHWA REGION	STATE	PROJECT	
5	OHIO		

292 / 412

CUYAHOGA COUNTY
CUY – 6 – 14.99

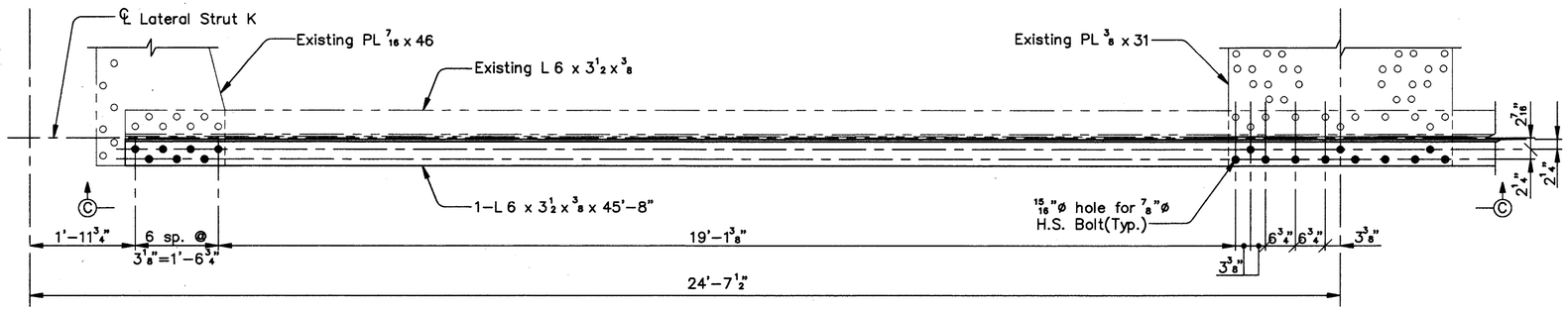

SECTION B–B
(Vertical Lacing Angles not shown)

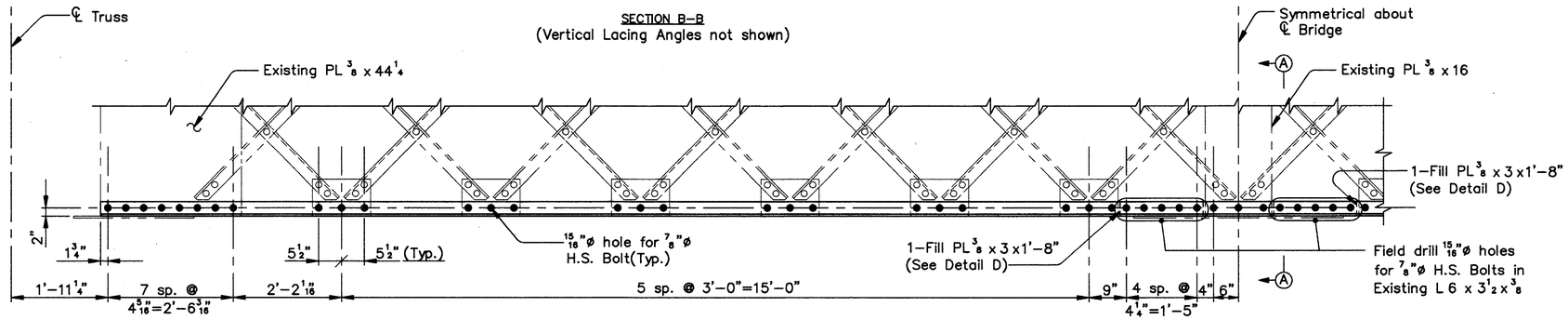

VIEW C–C
LATERAL STRUT K

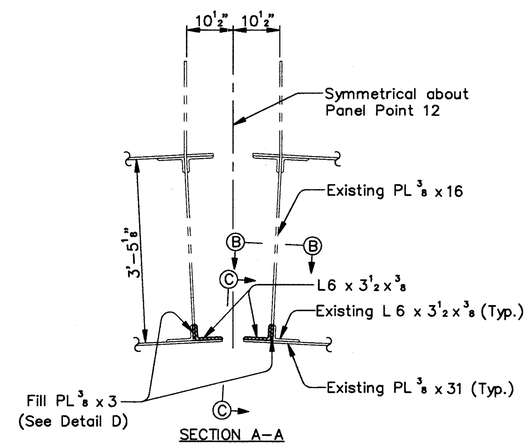

SECTION A–A

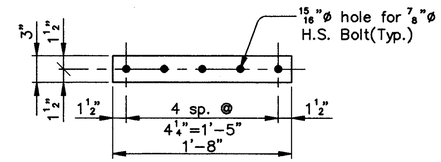

DETAIL D
(4 required)

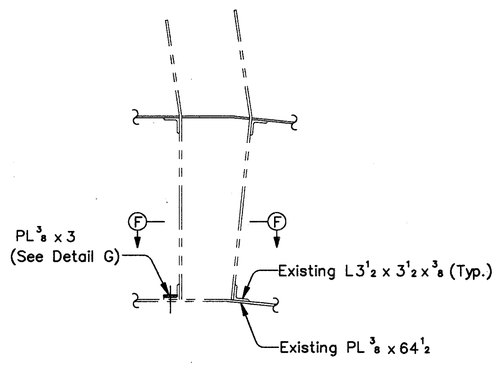

SECTION E–E

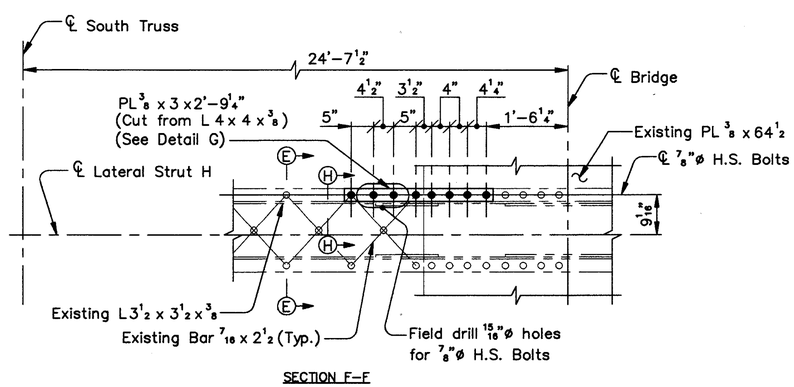

SECTION F–F
LATERAL STRUT H

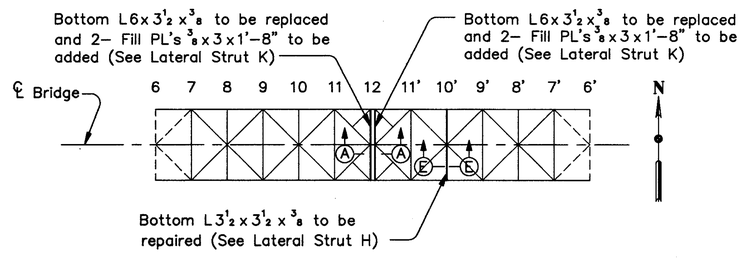

SCHEMATIC – LOWER ARCH RIBS FRAMING PLAN

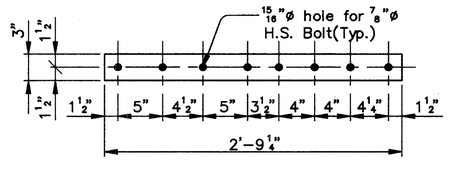

DETAIL G
(1 required)

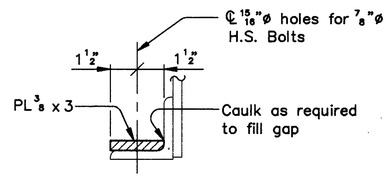

SECTION H–H

COUNTY BRIDGE NO. 84

HOWARD NEEDLES TAMMEN & BERGENDOFF
ARCHITECTS ENGINEERS PLANNERS
HNTB

LOWER CHORD LATERAL STRUT REPLACEMENT AND REPAIR DETAILS

BR. NO. CUY – 6 – 1499
REHABILITATION OF
VETERANS MEMORIAL BRIDGE
(U.S. 6, 20, 42 & S.R. 3 OVER CUYAHOGA RIVER)

CLEVELAND CUYAHOGA COUNTY OHIO

DRAWN	TRACED	CHECKED	REVIEWED	REVISED
J.L.V.	J.L.V.	A.D.Y.	C.A.B.	
DATE 09/23/93	DATE 09/23/93	DATE 11/05/93	DATE 04/06/94	SHEET 160/270

\11646\STEEL\LA12A.DWG

FHWA REGION	STATE	PROJECT	
5	OHIO		

293/412

CUYAHOGA COUNTY
CUY – 6 – 14.99

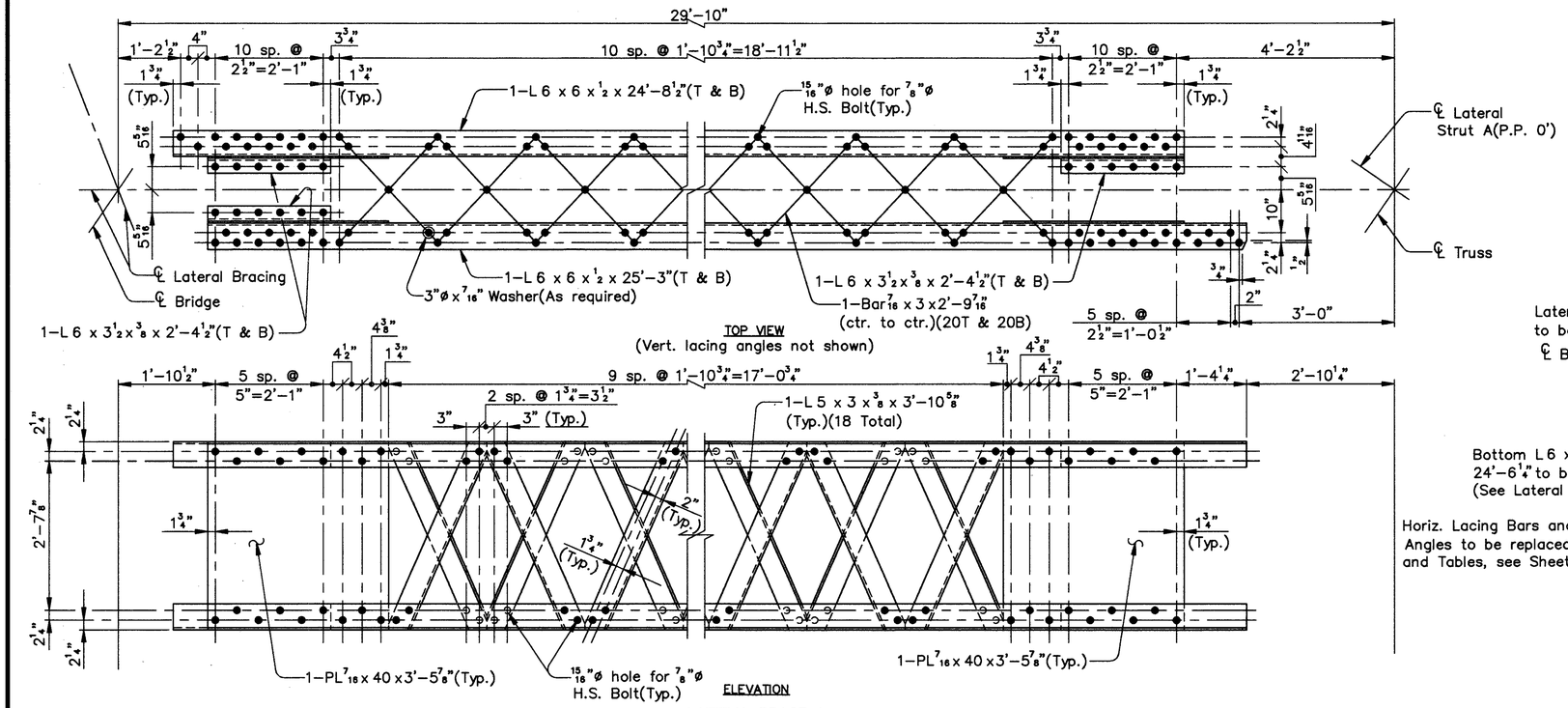

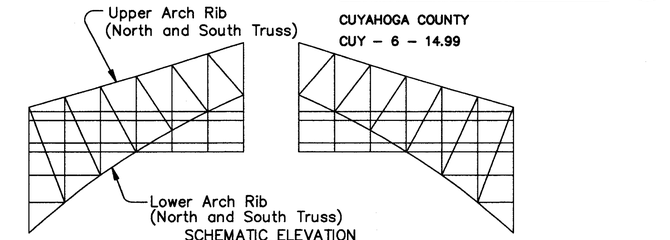

SCHEMATIC ELEVATION

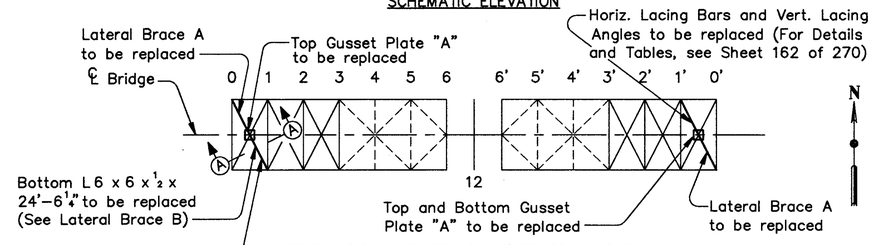

SCHEMATIC – LOWER ARCH RIBS FRAMING PLAN

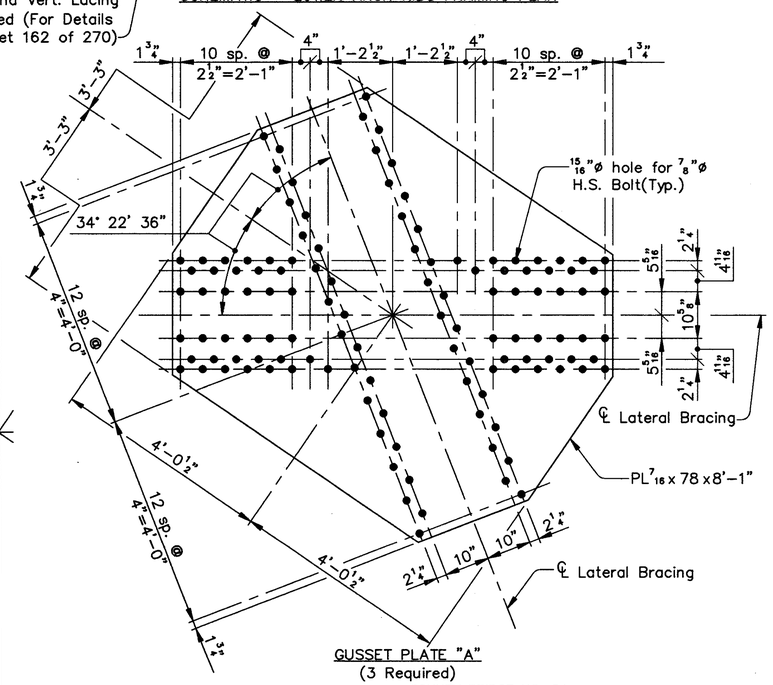

GUSSET PLATE "A"
(3 Required)

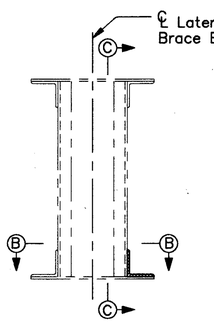

SECTION A–A

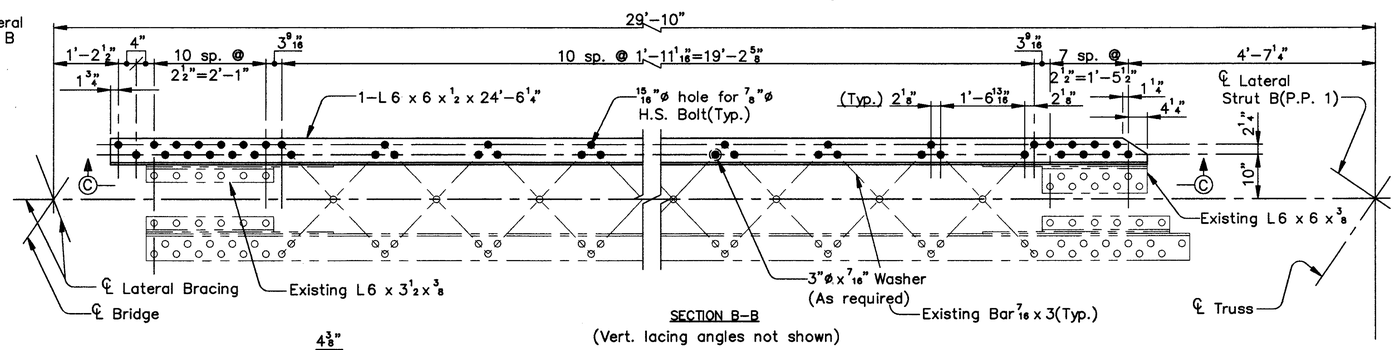

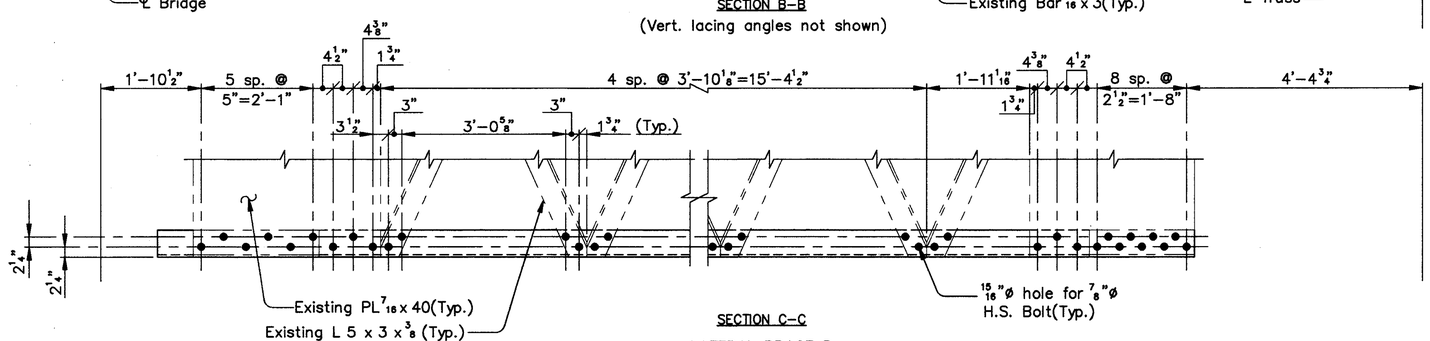

Notes:
Lateral Brace A between Panel Point 0' and Panel Point 1' shown.
Lateral Brace A between Panel Point 0 and Panel Point 1 symmetrical about Panel Point 12 and ℄ Bridge.
(T) denotes Top.
(B) denotes Bottom.
(P.P.) denotes Panel Point.

COUNTY BRIDGE NO. 84

HOWARD NEEDLES TAMMEN & BERGENDOFF
ARCHITECTS ENGINEERS PLANNERS
HNTB

LOWER CHORD LATERAL BRACING REPLACEMENT DETAILS
BR. NO. CUY – 6 – 1499
REHABILITATION OF
VETERANS MEMORIAL BRIDGE
(U.S. 6, 20, 42 & S.R. 3 OVER CUYAHOGA RIVER)
CLEVELAND CUYAHOGA COUNTY OHIO

DRAWN	TRACED	CHECKED	REVIEWED	REVISED
J.L.V.	J.L.V.	A.D.Y.	C.A.B.	
DATE 09/07/93	DATE 09/07/93	DATE 11/04/93	DATE 4/06/94	SHEET 161/270

\11646\LAO-1A.DWG

FHWA REGION	STATE	PROJECT	
5	OHIO		

294 / 412

CUYAHOGA COUNTY
CUY – 6 – 14.99

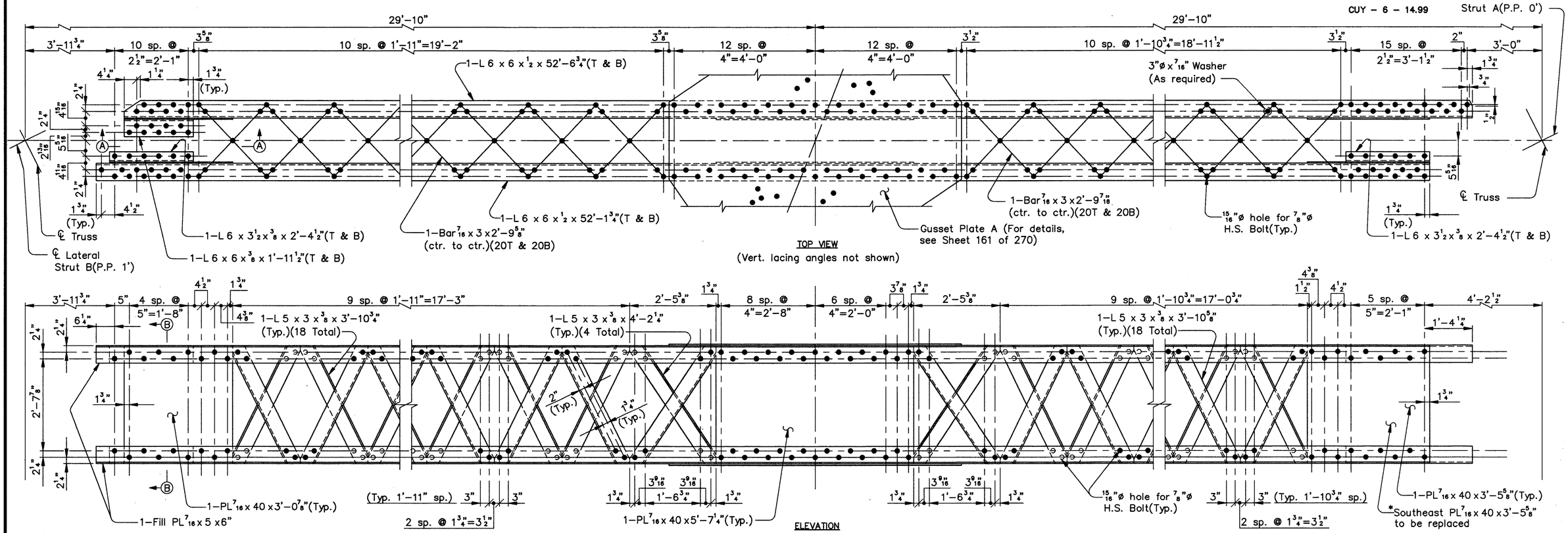

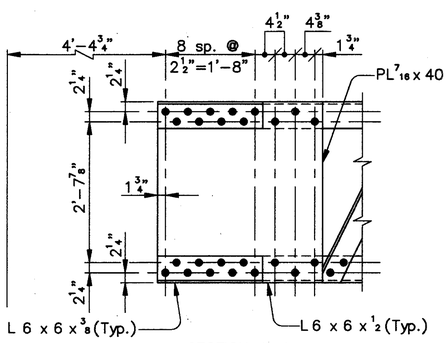

SECTION A–A

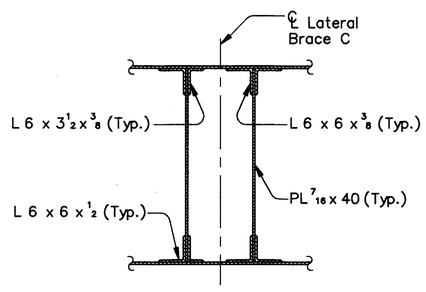

SECTION B–B

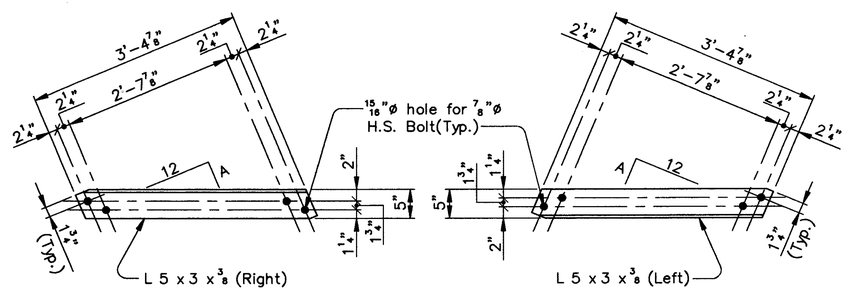

LACING ANGLE DETAIL

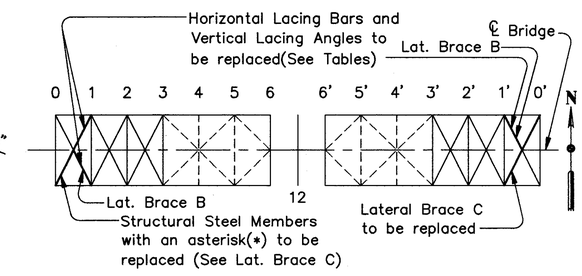

SCHEMATIC – LOWER ARCH RIBS FRAMING PLAN

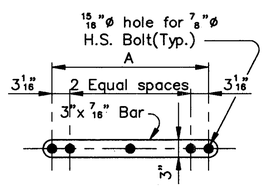

LACING BAR DETAIL

ADDITIONAL HORIZONTAL LACING BAR REPLACEMENT LOCATIONS FOR LOWER CHORD LATERAL BRACING					
LATERAL BRACE	BETWEEN	ORIENTATION	NO.	A	LENGTH
B	0–1	Top	6	2'–9 5/8"	3'–0 5/8"
B	0–1	Bottom	20	2'–9 5/8"	3'–0 5/8"
C	0–1	Top	4	2'–9 5/8"	3'–0 5/8"
B	0'–1'	Bottom	10	2'–9 5/8"	3'–0 5/8"

ADDITIONAL VERTICAL LACING ANGLE REPLACEMENT LOCATIONS FOR LOWER CHORD LATERAL BRACING					
LATERAL BRACE	BETWEEN	ORIENTATION	NO.	A	LENGTH
B	0–1	East Face–Right	1	5 13/16	3'–10 3/4"
C	0–1	East Face–Right	2	5 13/16	3'–10 3/4"

Note:
Bars and angles to be replaced will be marked in the field by the Engineer.

Notes:
Lateral Brace C between Panel Point 0' and Panel Point 1' shown.
Lateral Brace C between Panel Point 0 and Panel Point 1 symmetrical about Panel Point 12 and ℄ Bridge.
(T) denotes Top.
(B) denotes Bottom.
(P.P.) denotes Panel Point.

COUNTY BRIDGE NO. 84

HOWARD NEEDLES TAMMEN & BERGENDOFF
ARCHITECTS ENGINEERS PLANNERS
HNTB

LOWER CHORD LATERAL BRACING REPLACEMENT DETAILS
BR. NO. CUY – 6 – 1499
REHABILITATION OF
VETERANS MEMORIAL BRIDGE
(U.S. 6, 20, 42 & S.R. 3 OVER CUYAHOGA RIVER)
CLEVELAND CUYAHOGA COUNTY OHIO

DRAWN J.L.V.	TRACED J.L.V.	CHECKED A.D.Y.	REVIEWED C.A.B.	REVISED
DATE 09/01/93	DATE 09/01/93	DATE 11/04/93	DATE 4/06/94	SHEET 162/270

\1646\LA0–1B.DWG

FHWA REGION	STATE	PROJECT	
5	OHIO		

295/412

CUYAHOGA COUNTY
CUY – 6 – 14.99

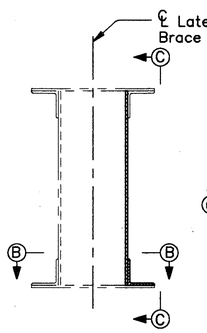

SECTION A–A

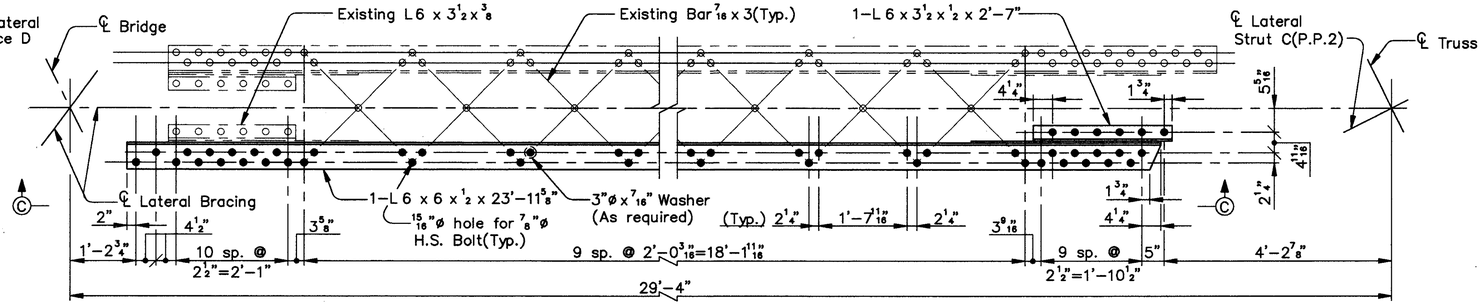

SECTION B–B
(Vert. lacing angles not shown)

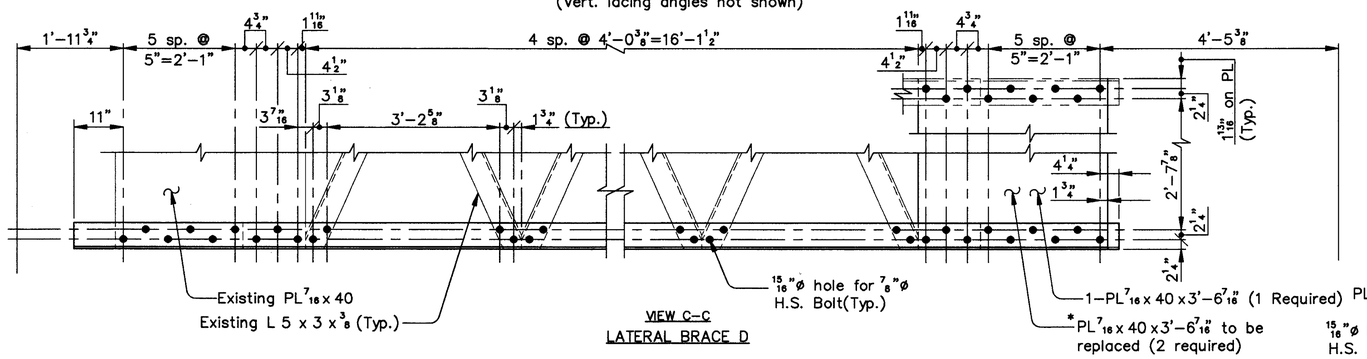

VIEW C–C
LATERAL BRACE D

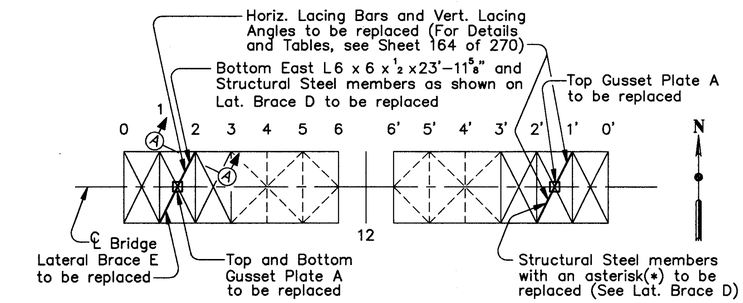

SCHEMATIC – LOWER ARCH RIBS FRAMING PLAN

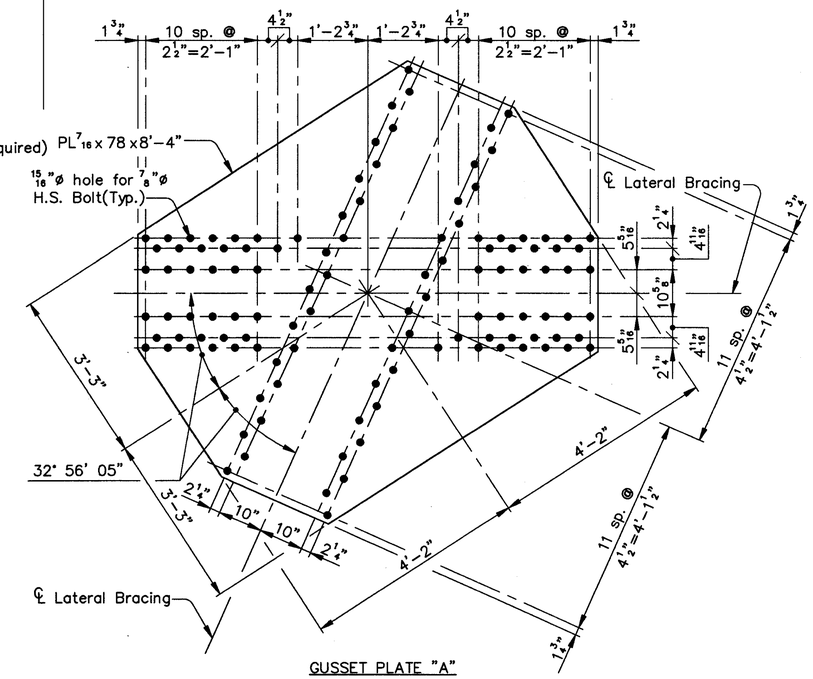

GUSSET PLATE "A"
(3 Required)

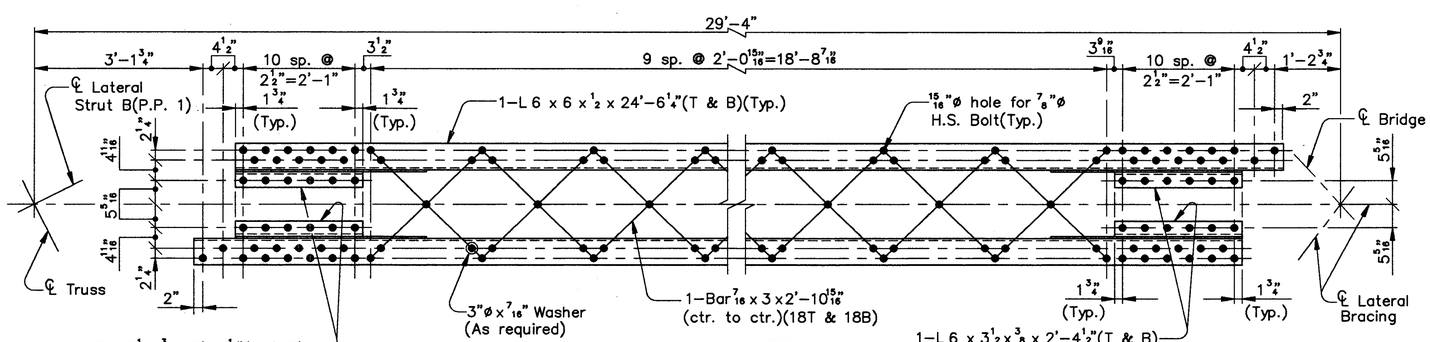

TOP VIEW
(Vert. lacing angles not shown)

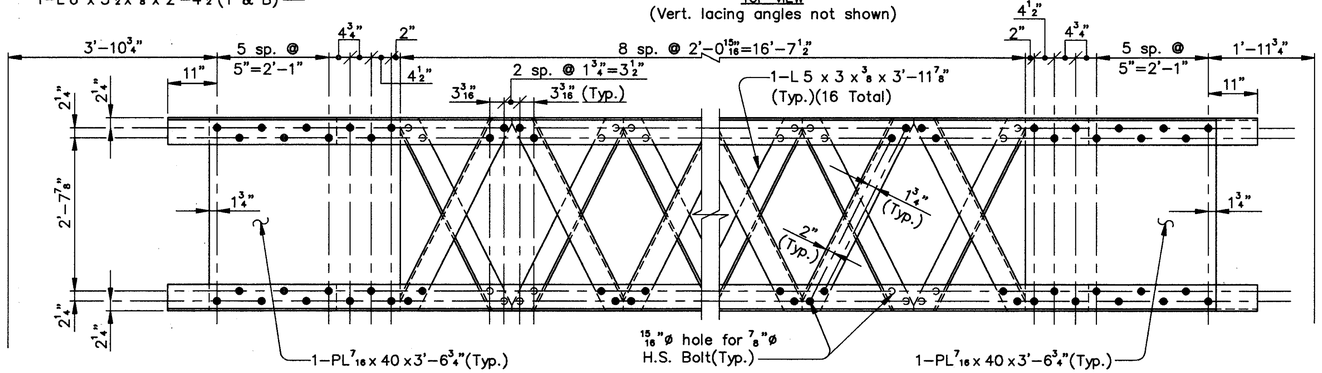

ELEVATION
LATERAL BRACE E

Notes:
Lateral Brace D and E between Panel Panel Point 1 and Panel Point 2 shown.
Lateral Brace D and E between Panel Point 1' and Panel Point 2' symmetrical about Panel Point 12 and ℄ Bridge.
(T) denotes Top.
(B) denotes Bottom.
(P.P.) denotes Panel Point.

COUNTY BRIDGE NO. 84

HOWARD NEEDLES TAMMEN & BERGENDOFF
ARCHITECTS ENGINEERS PLANNERS
HNTB

LOWER CHORD LATERAL BRACING
REPLACEMENT DETAILS
BR. NO. CUY – 6 – 1499
REHABILITATION OF
VETERANS MEMORIAL BRIDGE
(U.S. 6, 20, 42 & S.R. 3 OVER CUYAHOGA RIVER)

CLEVELAND CUYAHOGA COUNTY OHIO

DRAWN	TRACED	CHECKED	REVIEWED	REVISED
J.L.V.	J.L.V.	A.D.Y.	C.A.B.	
DATE 09/11/93	DATE 09/11/93	DATE 11/04/93	DATE 4/06/94	SHEET 163/270

\11646\LA1-2A.DWG

FHWA REGION	STATE	PROJECT	
5	OHIO		

296/412

CUYAHOGA COUNTY
CUY – 6 – 14.99

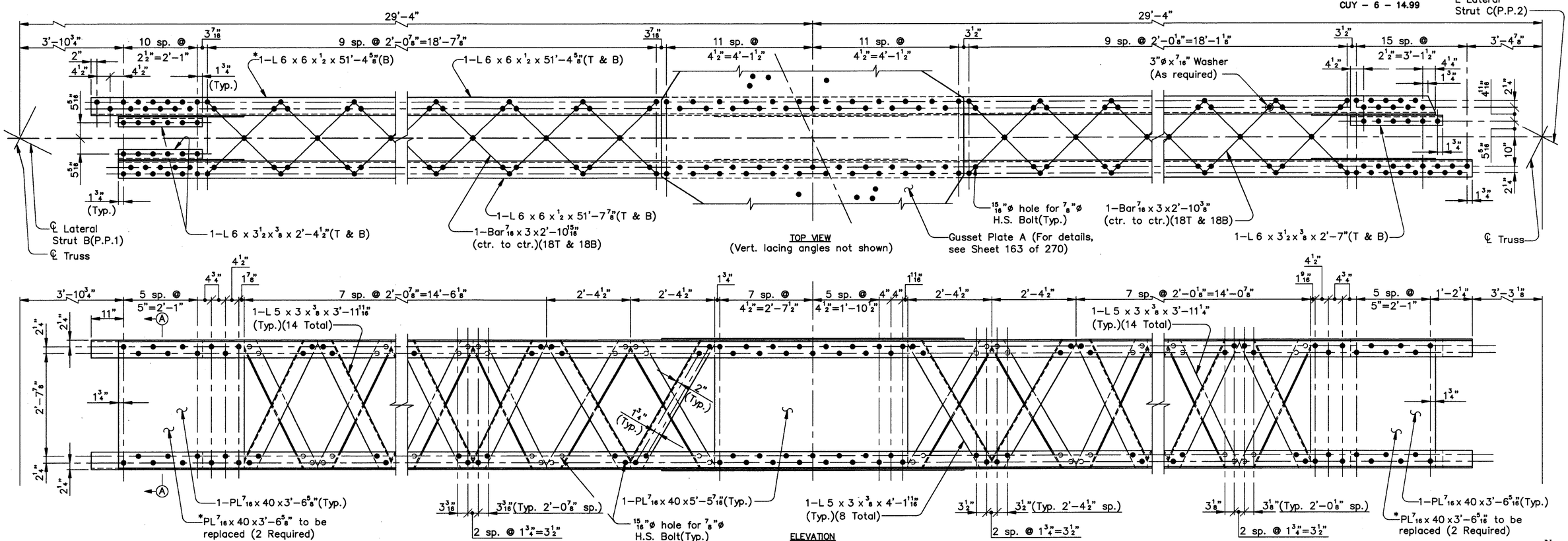

ELEVATION
LATERAL BRACE F
(1 Required)

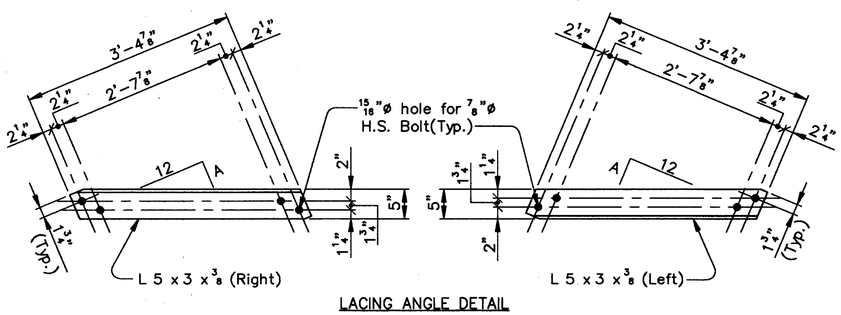

LACING ANGLE DETAIL

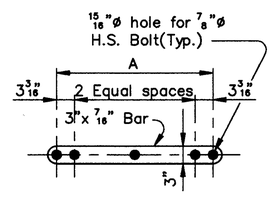

LACING BAR DETAIL

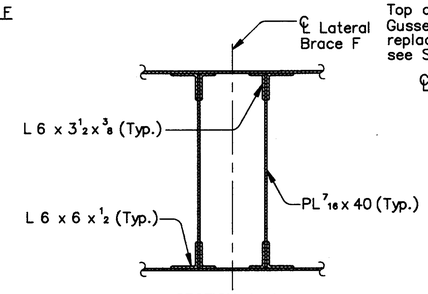

SECTION A–A

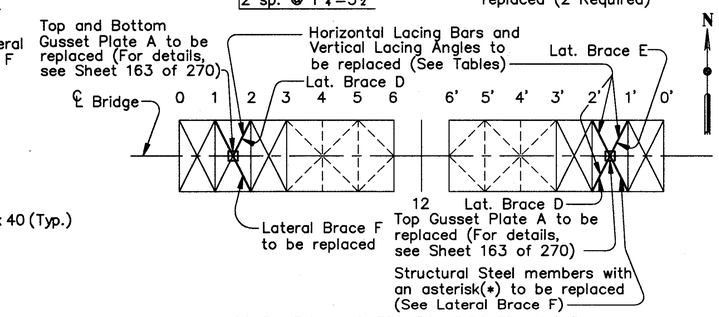

SCHEMATIC – LOWER ARCH RIBS FRAMING PLAN

COUNTY BRIDGE NO. 84

ADDITIONAL VERTICAL LACING ANGLE REPLACEMENT LOCATIONS FOR LOWER CHORD LATERAL BRACING					
LATERAL BRACE	BETWEEN	ORIENTATION	NO.	A	LENGTH
D	1'–2'	West Face–Right	1	6 5/32	3'–11 3/8"
E	1'–2'	West Face–Left	1	6 13/32	3'–11 7/8"
F	1'–2'	East Face–Right	3	6 13/32	3'–11 11/16"
F	1'–2'	East Face–Left	3	6 13/32	3'–11 11/16"

Note:
Bars and angles to be replaced will be marked in the field by the Engineer.

ADDITIONAL HORIZONTAL LACING BAR REPLACEMENT LOCATIONS FOR LOWER CHORD LATERAL BRACING					
LATERAL BRACE	BETWEEN	ORIENTATION	NO.	A	LENGTH
D	1–2	Top	3	2'–10 7/16"	3'–1 7/16"
D	1–2	Bottom	3	2'–10 7/16"	3'–1 7/16"
D	1'–2'	Top	2	2'–10 7/16"	3'–1 7/16"
E	1'–2'	Top	18	2'–10 15/16"	3'–1 15/16"
E	1'–2'	Bottom	6	2'–10 15/16"	3'–1 15/16"
F	1'–2'	Top	8	2'–10 3/8"	3'–1 3/8"
F	1'–2'	Bottom	4	2'–10 3/8"	3'–1 3/8"
F	1'–2'	Top	18	2'–10 15/16"	3'–1 15/16"
F	1'–2'	Bottom	10	2'–10 15/16"	3'–1 15/16"

Notes:
Lateral Brace F between Panel Point 1 and Panel Point 2 shown.
Lateral Brace F between Panel Point 1' and Panel Point 2' symmetrical about Panel Point 12 and ℄ Bridge.
(T) denotes Top.
(B) denotes Bottom.
(P.P.) denotes Panel Point.

HOWARD NEEDLES TAMMEN & BERGENDOFF
ARCHITECTS ENGINEERS PLANNERS
HNTB

LOWER CHORD LATERAL BRACING REPLACEMENT DETAILS
BR. NO. CUY – 6 – 1499
REHABILITATION OF
VETERANS MEMORIAL BRIDGE
(U.S. 6, 20, 42 & S.R. 3 OVER CUYAHOGA RIVER)
CLEVELAND CUYAHOGA COUNTY OHIO

DRAWN J.L.V.	TRACED J.L.V.	CHECKED A.D.Y.	REVIEWED C.A.B.	REVISED
DATE 08/30/93	DATE 08/30/93	DATE 11/04/93	DATE 4/06/94	SHEET 164/270

\11646\LA1–2B.DWG

FHWA REGION	STATE	PROJECT	
5	OHIO		

297
412

CUYAHOGA COUNTY
CUY – 6 – 14.99

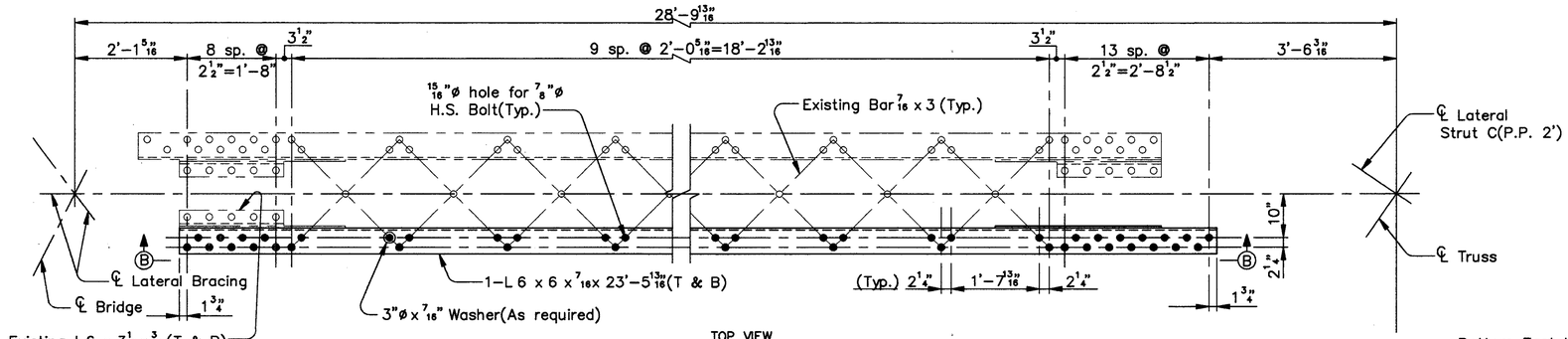

TOP VIEW
(Vert. lacing angles not shown)

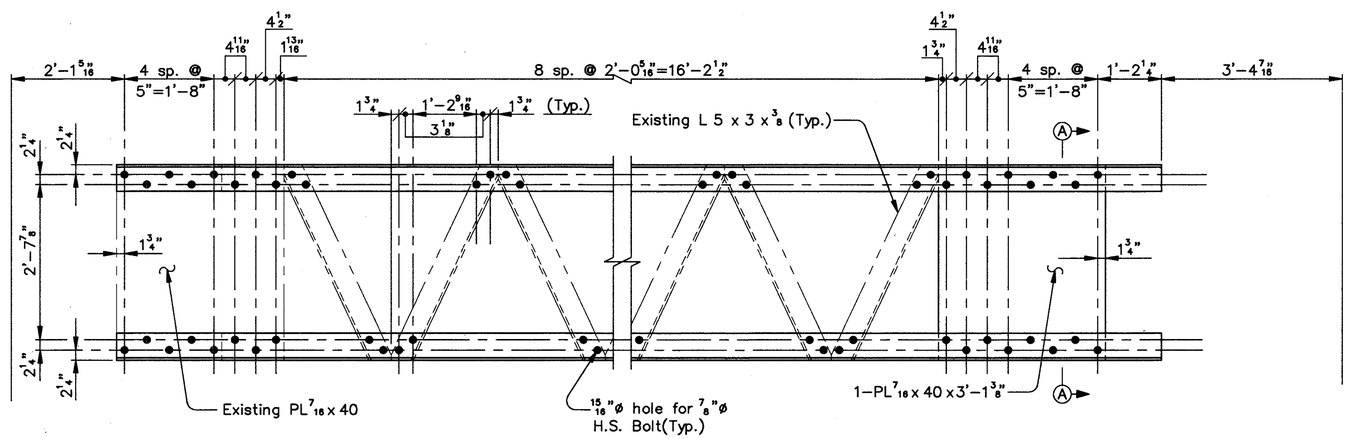

VIEW B–B
LATERAL BRACE G

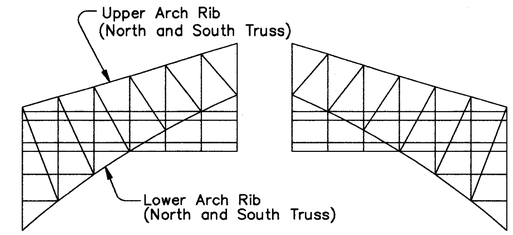

SCHEMATIC ELEVATION

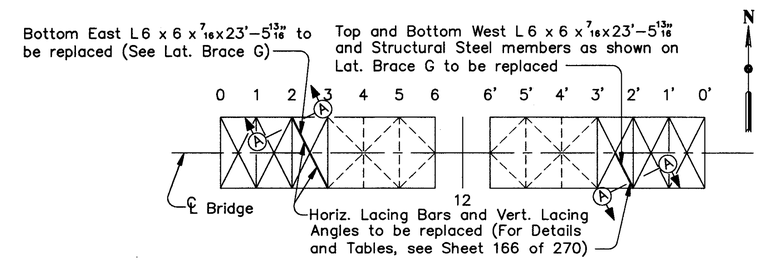

SCHEMATIC – LOWER ARCH RIBS FRAMING PLAN

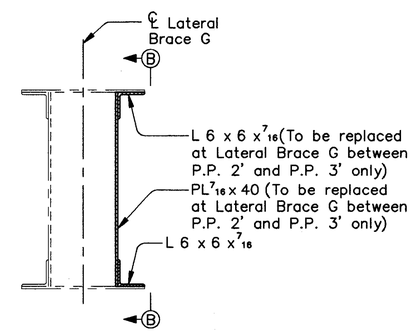

SECTION A–A

Notes:
Lateral Brace G between Panel Point 2' and Panel Point 3' shown.
Lateral Brace G between Panel Point 2 and Panel Point 3 symmetrical about Panel Point 12 and ℄ Bridge.
(T) denotes Top.
(B) denotes Bottom.
(P.P.) denotes Panel Point.

COUNTY BRIDGE NO. 84

HOWARD NEEDLES TAMMEN & BERGENDOFF
ARCHITECTS ENGINEERS PLANNERS
HNTB

LOWER CHORD LATERAL BRACING
REPLACEMENT DETAILS
BR. NO. CUY – 6 – 1499
REHABILITATION OF
VETERANS MEMORIAL BRIDGE
(U.S. 6, 20, 42 & S.R. 3 OVER CUYAHOGA RIVER)
CLEVELAND CUYAHOGA COUNTY OHIO

DRAWN J.L.V.	TRACED J.L.V.	CHECKED A.D.Y.	REVIEWED C.A.B.	REVISED
DATE 09/15/93	DATE 09/15/93	DATE 11/05/93	DATE 4/06/94	SHEET 165/270

\11646\LA2–3A.DWG

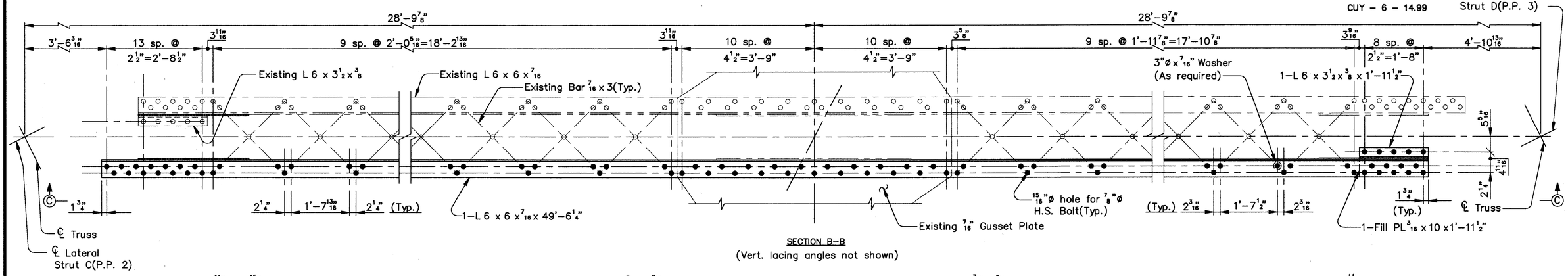

SECTION B-B
(Vert. lacing angles not shown)

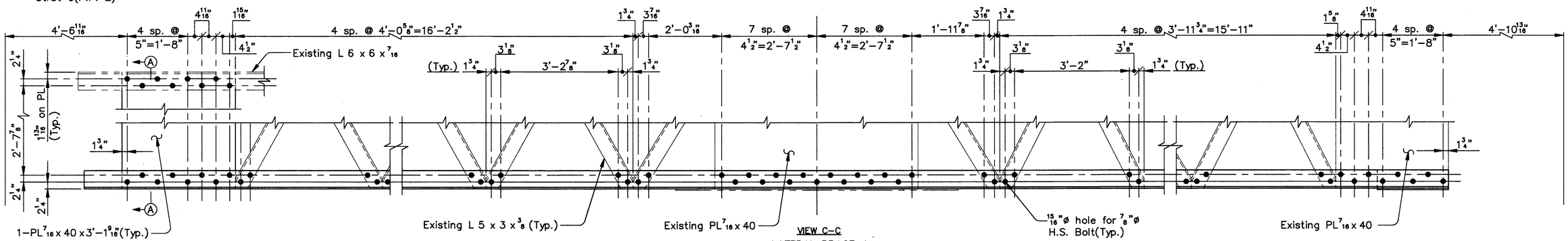

VIEW C-C
LATERAL BRACE J

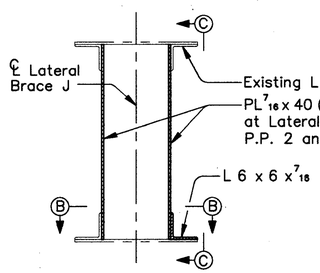

SECTION A-A

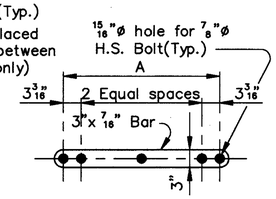

LACING BAR DETAIL

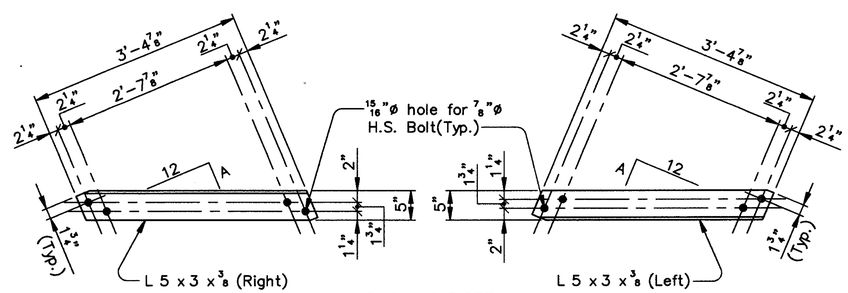

LACING ANGLE DETAIL

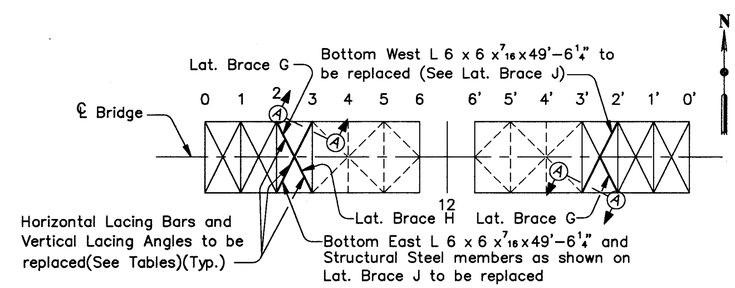

SCHEMATIC - LOWER ARCH RIBS FRAMING PLAN

ADDITIONAL HORIZONTAL LACING BAR REPLACEMENT LOCATIONS FOR LOWER CHORD LATERAL BRACING

LATERAL BRACE	BETWEEN	ORIENTATION	NO.	A	LENGTH
G	2-3	Top	6	2'-10 1/2"	3'-1 1/2"
G	2-3	Bottom	2	2'-10 1/2"	3'-1 1/2"
H	2-3	Top	5	2'-10 3/16"	3'-1 3/16"
J	2-3	Top	18	2'-10 1/2"	3'-1 1/2"
J	2-3	Top	2	2'-10 3/16"	3'-1 3/16"
J	2-3	Bottom	8	2'-10 1/2"	3'-1 1/2"
G	2'-3'	Top	8	2'-10 1/2"	3'-1 1/2"
G	2'-3'	Bottom	6	2'-10 1/2"	3'-1 1/2"
J	2'-3'	Top	18	2'-10 1/2"	3'-1 1/2"
J	2'-3'	Bottom	6	2'-10 1/2"	3'-1 1/2"

ADDITIONAL VERTICAL LACING ANGLE REPLACEMENT LOCATIONS FOR LOWER CHORD LATERAL BRACING

LATERAL BRACE	BETWEEN	ORIENTATION	NO.	A	LENGTH
G	2-3	East Face-Left	1	6 7/32	3'-11 1/2"
J	2-3	East Face-Right	2	6 7/32	3'-11 1/2"
J	2-3	West Face-Left	1	6 7/32	3'-11 1/2"
J	2'-3'	East Face-Right	1	6 7/32	3'-11 1/2"
J	2'-3'	East Face-Left	1	6 7/32	3'-11 1/2"
J	2'-3'	West Face-Right	1	6 7/32	3'-11 1/2"
J	2'-3'	West Face-Left	4	6 7/32	3'-11 1/2"

Note:
Bars and angles to be replaced will be marked in the field by the Engineer.

Notes:
Lateral Brace J between Panel Point 2 and Panel Point 3 shown.
Lateral Brace J between Panel Point 2' and Panel Point 3' symmetrical about Panel Point 12 and ℄ Bridge.
(T) denotes Top.
(B) denotes Bottom.
(P.P.) denotes Panel Point

COUNTY BRIDGE NO. 84

HOWARD NEEDLES TAMMEN & BERGENDOFF
ARCHITECTS ENGINEERS PLANNERS
HNTB

LOWER CHORD LATERAL BRACING REPLACEMENT DETAILS
BR. NO. CUY - 6 - 1499
REHABILITATION OF
VETERANS MEMORIAL BRIDGE
(U.S. 6, 20, 42 & S.R. 3 OVER CUYAHOGA RIVER)
CLEVELAND CUYAHOGA COUNTY OHIO

DRAWN J.L.V.	TRACED J.L.V.	CHECKED A.D.Y.	REVIEWED C.A.B.	REVISED
DATE 09/15/93	DATE 09/15/93	DATE 11/05/93	DATE 4/06/94	SHEET 166/270

\11646\LA2-3B.DWG

299

FHWA REGION	STATE	PROJECT	
5	OHIO		

299/412

CUYAHOGA COUNTY
CUY – 6 – 14.99

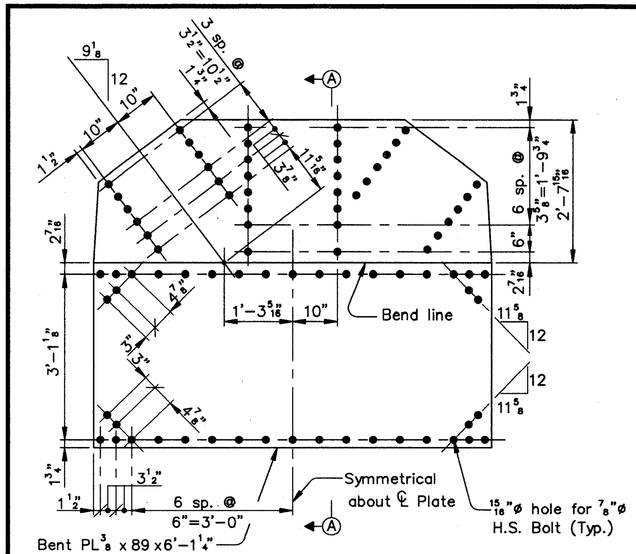

GUSSET PLATE "A"
(Developed Elevation)
(2 Required)

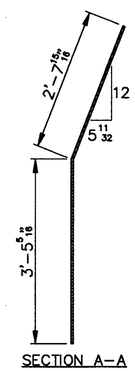

SECTION A–A

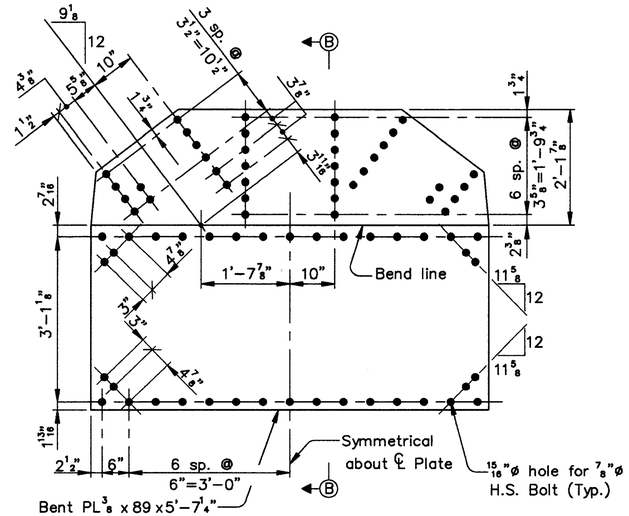

GUSSET PLATE "B"
(Developed Elevation)
(2 Required)

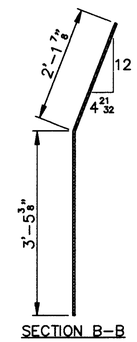

SECTION B–B

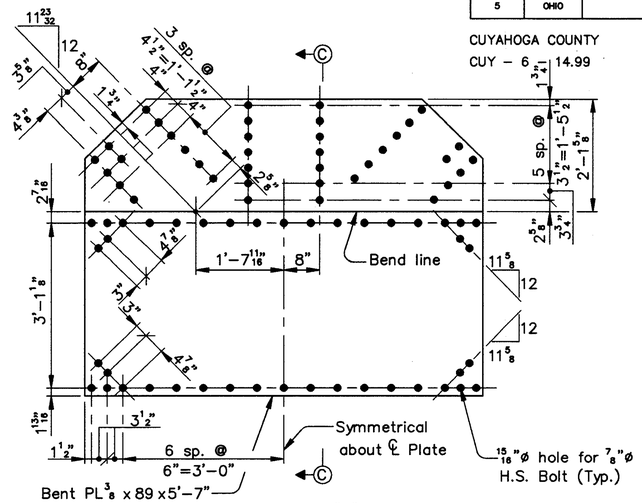

GUSSET PLATE "C"
(Developed Elevation)
(2 Required)

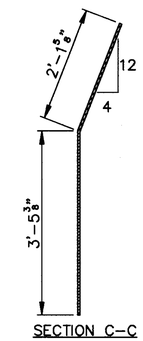

SECTION C–C

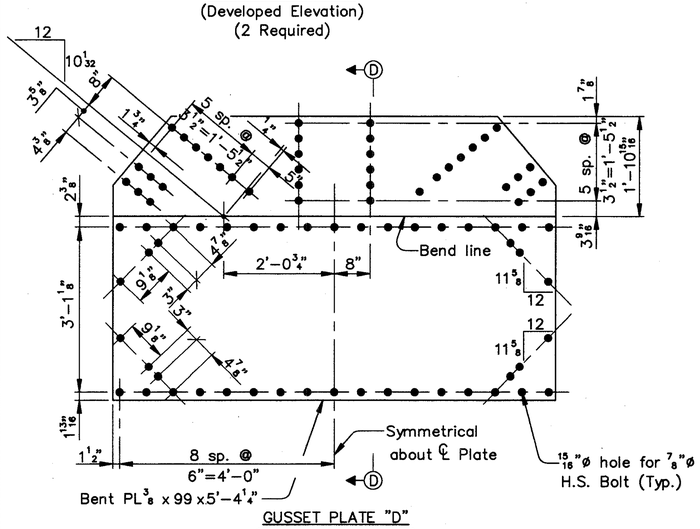

GUSSET PLATE "D"
(Developed Elevation)
(2 Required)

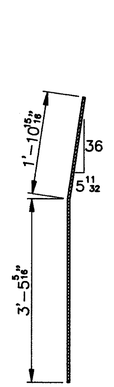

SECTION D–D

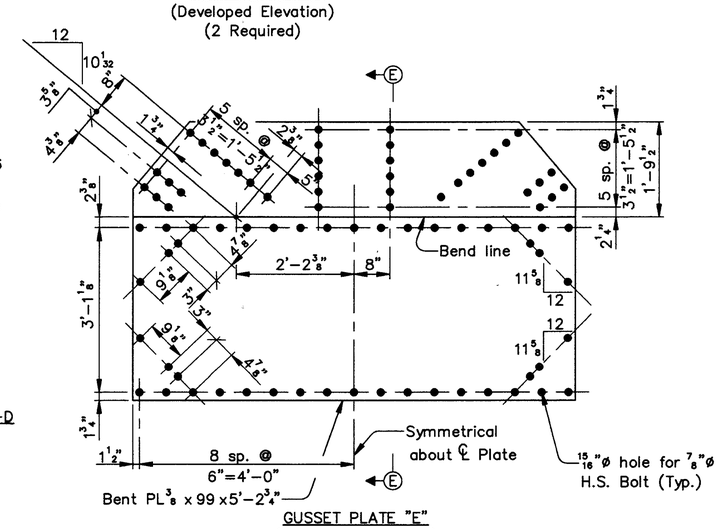

GUSSET PLATE "E"
(Developed Elevation)
(1 Required)

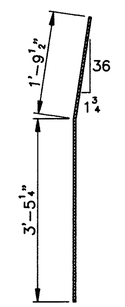

SECTION E–E

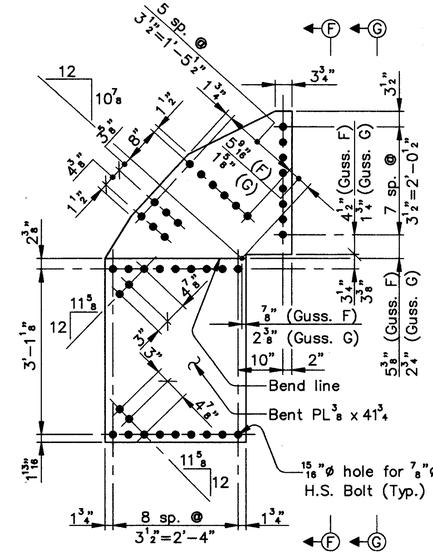

GUSSET PLATE "F" AND "G"
(Developed Elevation)
(1 Required–Each)

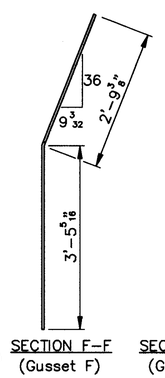

SECTION F–F
(Gusset F)

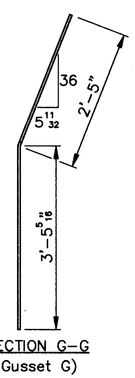

SECTION G–G
(Gusset G)

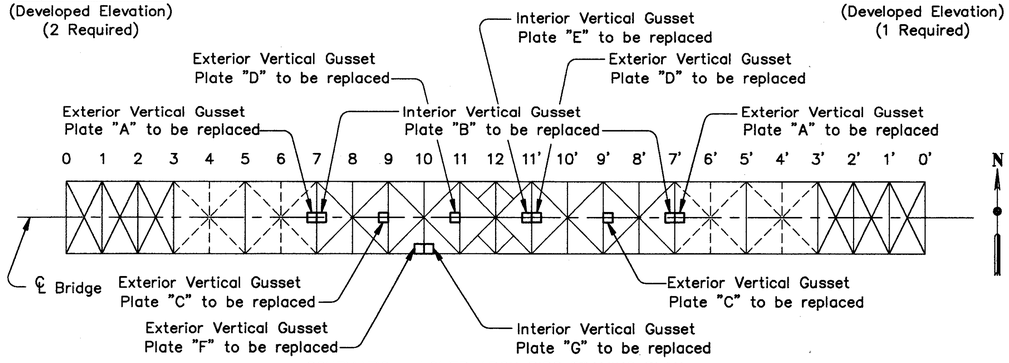

SCHEMATIC – LOWER ARCH RIBS FRAMING PLAN

COUNTY BRIDGE NO. 84

HOWARD NEEDLES TAMMEN & BERGENDOFF
ARCHITECTS ENGINEERS PLANNERS
HNTB

REPLACEMENT–LOWER CHORD
LATERAL BRACING GUSSET DETAILS
BR. NO. CUY – 6 – 1499
REHABILITATION OF
VETERANS MEMORIAL BRIDGE
(U.S. 6, 20, 42 & S.R. 3 OVER CUYAHOGA RIVER)

CLEVELAND CUYAHOGA COUNTY OHIO

DRAWN	TRACED	CHECKED	REVIEWED	REVISED
J.L.V.	J.L.V.	A.D.Y.	C.A.B.	
DATE 09/16/93	DATE 09/16/93	DATE 11/11/93	DATE 4/06/94	SHEET 167/270

\11646\STEEL\LARCH1.DWG

FHWA REGION	STATE	PROJECT	
5	OHIO		

300/412

CUYAHOGA COUNTY
CUY – 6 – 14.99

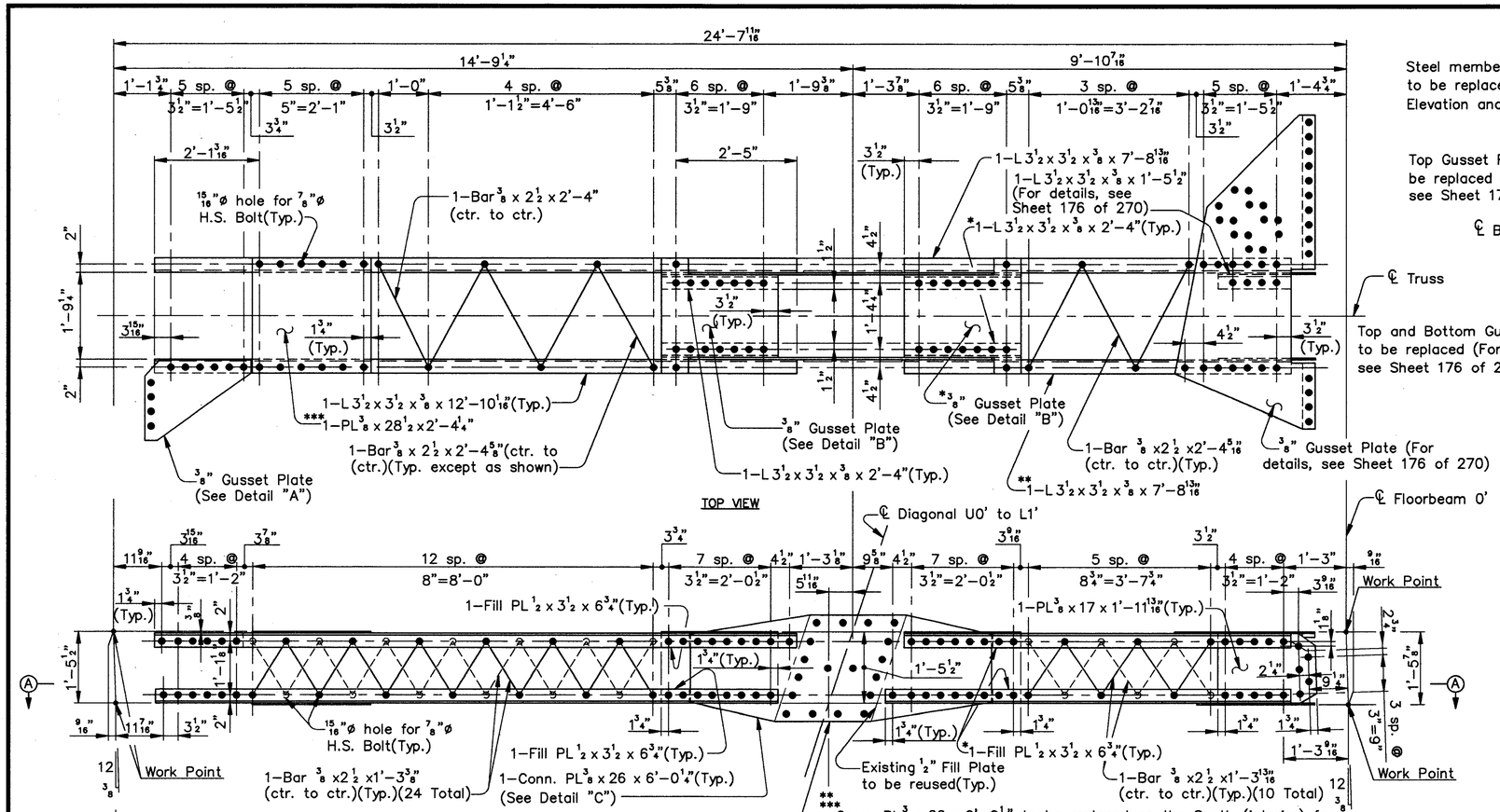

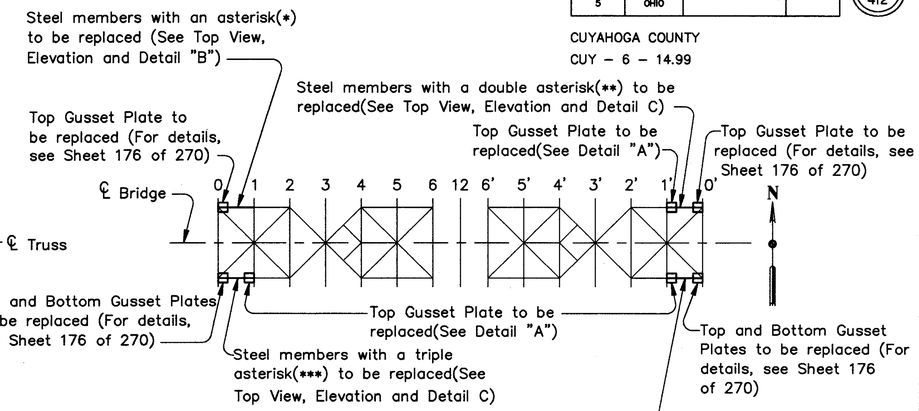

SCHEMATIC LOWER DECK FRAMING PLAN

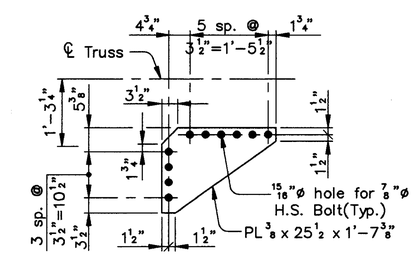

DETAIL "A"
(3 required)

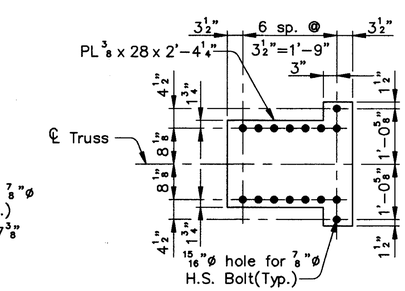

DETAIL "B"
(5 required)

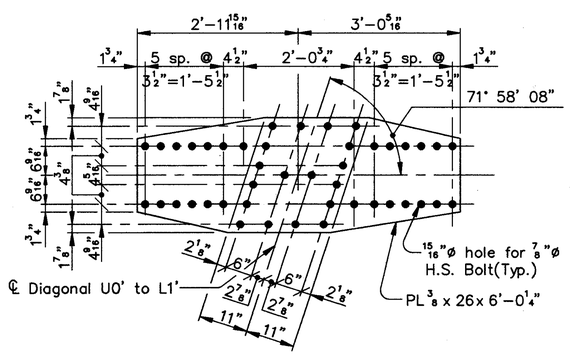

DETAIL "C"
(5 required)

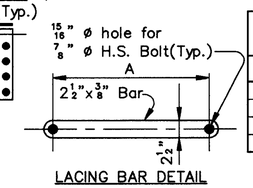

LACING BAR DETAIL

ADDITIONAL LACING BAR REPLACEMENT LOCATIONS FOR LOWER DECK STRUT A				
TRUSS	BETWEEN	NO.	A	LENGTH
North	FB0 & FB1(T)	1	2'-4 5/8"	2'-7 1/8"
North	FB0 & FB1(N)	2	1'-3 3/8"	1'-5 7/8"
North	FB0' & FB1'(T)	3	2'-4 5/16"	2'-6 13/16"

Note:
Bars to be replaced will be marked in the field by the Engineer.

Notes:
Lower Deck Strut A between Floorbeams 0' and 1' South shown.
Lower Deck Strut A between Floorbeams 0' and 1' North symmetrical about ℄ Bridge.
Lower Deck Strut A between Floorbeams 0 and 1 South symmetrical about Panel Point 12.
Lower Deck Strut A between Floorbeams 0 and 1 North symmetrical about Panel Point 12 and ℄ Bridge.
FB denotes Floorbeam.
(T) denotes Top Face.
(N) denotes North Face.

COUNTY BRIDGE NO. 84

HOWARD NEEDLES TAMMEN & BERGENDOFF
ARCHITECTS ENGINEERS PLANNERS
HNTB

REPLACEMENT–LOWER DECK STRUT
BR. NO. CUY – 6 – 1499
REHABILITATION OF
VETERANS MEMORIAL BRIDGE
(U.S. 6, 20, 42 & S.R. 3 OVER CUYAHOGA RIVER)
CLEVELAND CUYAHOGA COUNTY OHIO

DRAWN	TRACED	CHECKED	REVIEWED	REVISED
J.L.V.	J.L.V.	A.D.Y.	C.A.B.	
DATE 9/24/92	DATE 9/24/92	DATE 9/25/92	DATE 4/06/94	SHEET 168/270

\11646\LDSO-1.DWG

FHWA REGION	STATE	PROJECT	
5	OHIO		

301 / 412

CUYAHOGA COUNTY
CUY – 6 – 14.99

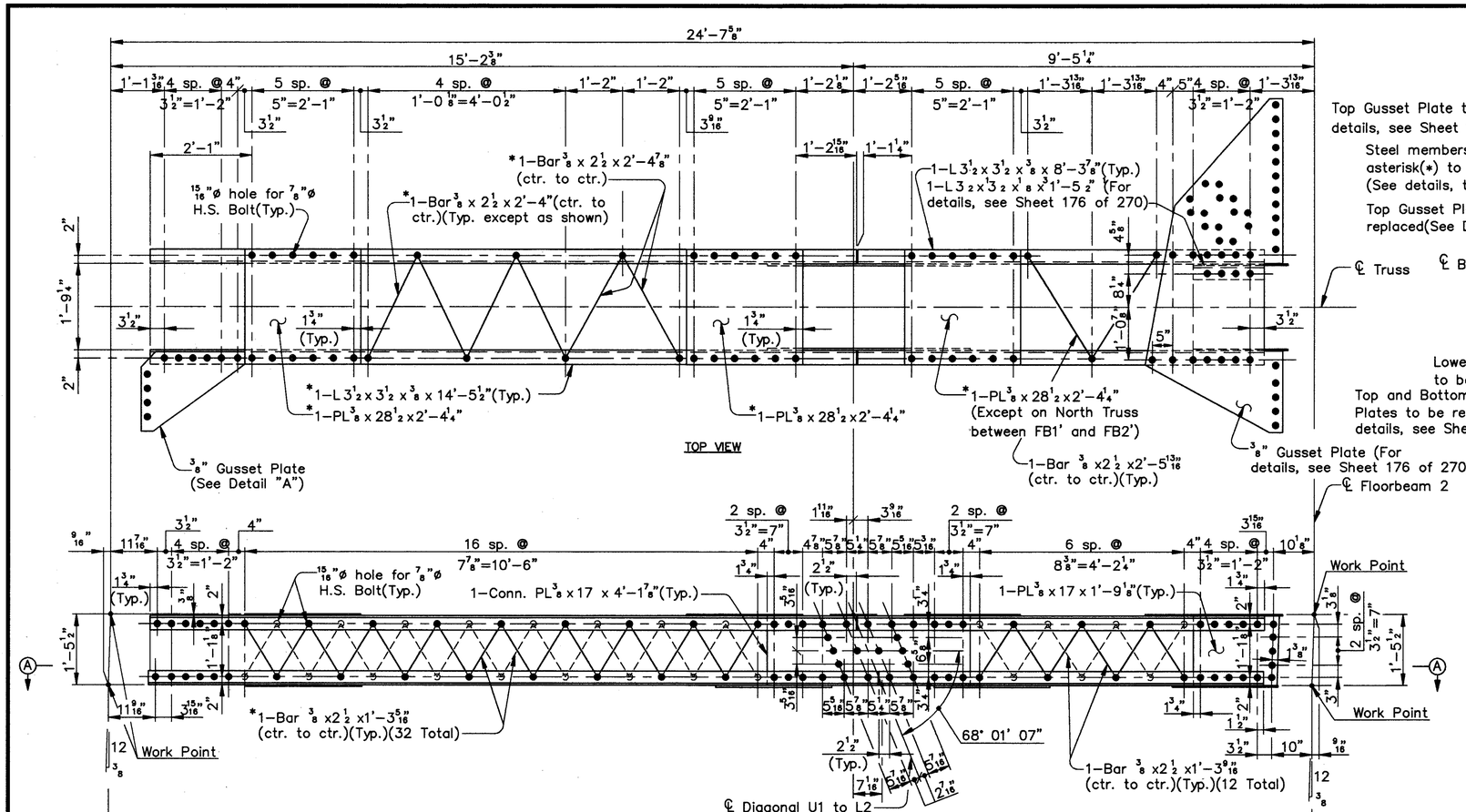

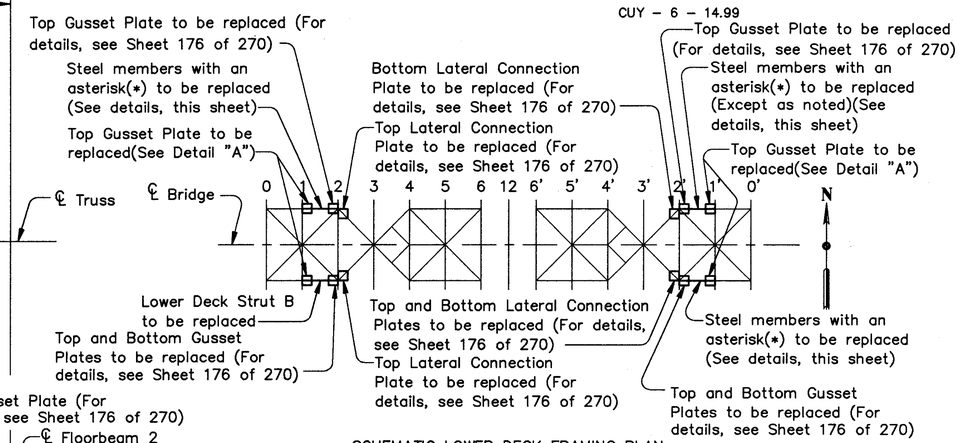

SCHEMATIC LOWER DECK FRAMING PLAN

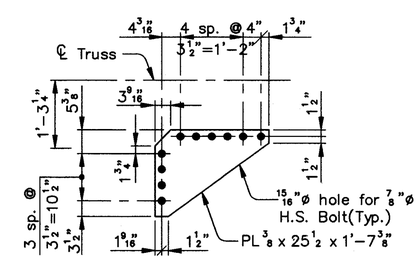

DETAIL "A"
(4 required)

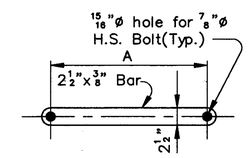

LACING BAR DETAIL

ADDITIONAL LACING BAR REPLACEMENT LOCATIONS FOR LOWER DECK STRUT B				
TRUSS	BETWEEN	NO.	A	LENGTH
North	FB1 & FB2(T)	1	2'–5 13/16"	2'–8 5/16"
North	FB1' & FB2'(T)	1	2'–5 13/16"	2'–8 5/16"
North	FB1' & FB2'(S)	2	1'–3 9/16"	1'–6 1/16"
South	FB1' & FB2'(T)	1	2'–5 13/16"	2'–8 5/16"

Note:
Bars to be replaced will be marked in the field by the Engineer.

Notes:
Lower Deck Strut B between Floorbeams 1 and 2 South shown.
Lower Deck Strut B between Floorbeams 1 and 2 North symmetrical about ℄ Bridge.
Lower Deck Strut B between Floorbeams 1' and 2' South symmetrical about Panel Point 12.
Lower Deck Strut B between Floorbeams 1' and 2' North symmetrical about Panel Point 12 and ℄ Bridge.
FB denotes Floorbeam.
(T) denotes Top Face.
(N) denotes North Face.

COUNTY BRIDGE NO. 84

HOWARD NEEDLES TAMMEN & BERGENDOFF
ARCHITECTS ENGINEERS PLANNERS
HNTB

REPLACEMENT–LOWER DECK STRUT
BR. NO. CUY – 6 – 1499
REHABILITATION OF
VETERANS MEMORIAL BRIDGE
(U.S. 6, 20, 42 & S.R. 3 OVER CUYAHOGA RIVER)
CLEVELAND CUYAHOGA COUNTY OHIO

DRAWN	TRACED	CHECKED	REVIEWED	REVISED
J.L.V.	J.L.V.	A.D.Y.	C.A.B.	
DATE 10/7/92	DATE 10/7/92	DATE 11/11/92	DATE 4/06/94	SHEET 169/270

\11646\STEEL\LDS1–2.DWG

FHWA REGION	STATE	PROJECT	
5	OHIO		

302/412

CUYAHOGA COUNTY
CUY – 6 – 14.99

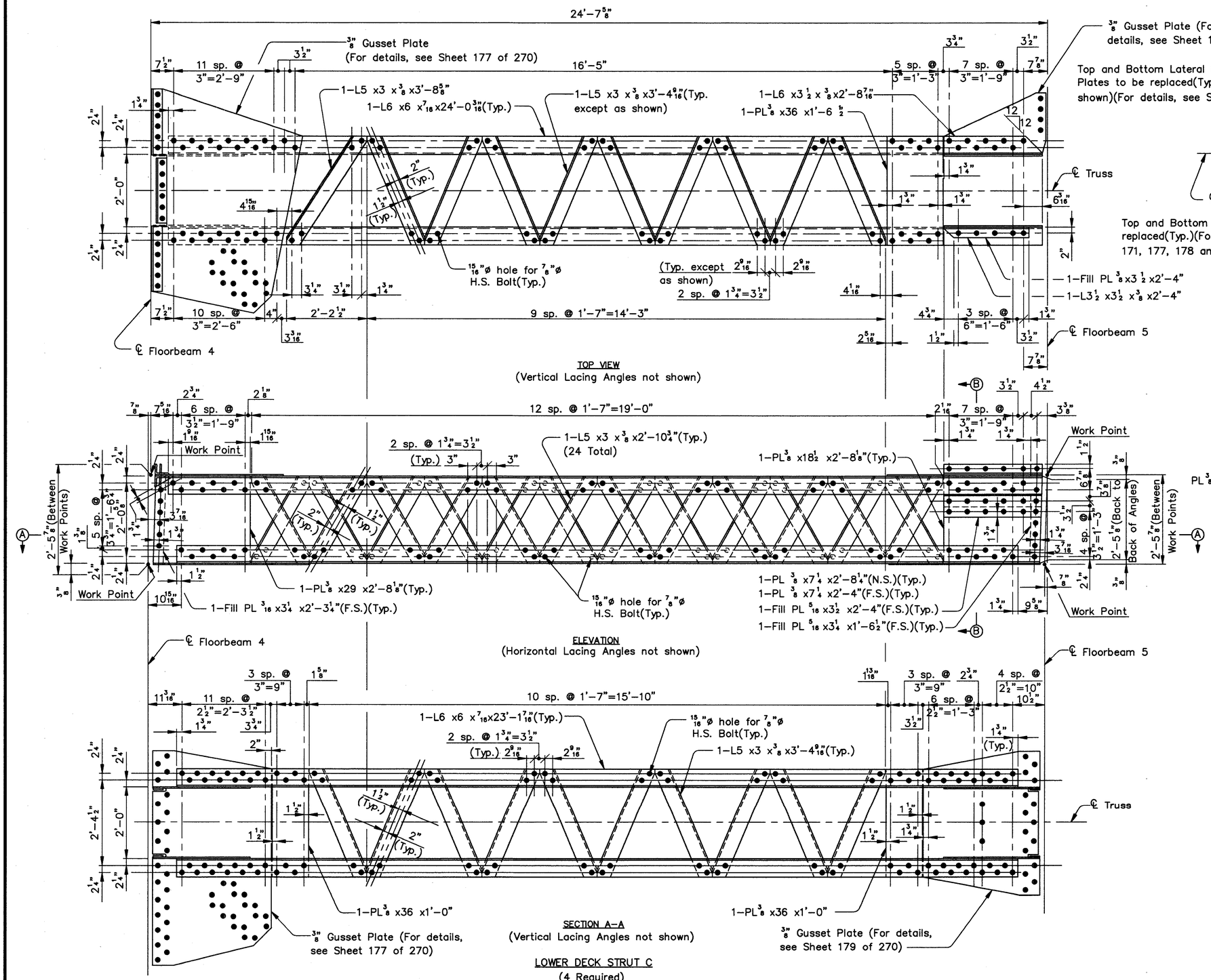

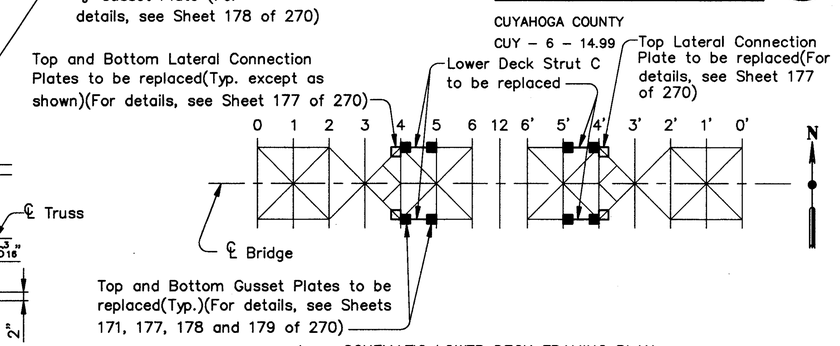

SCHEMATIC LOWER DECK FRAMING PLAN

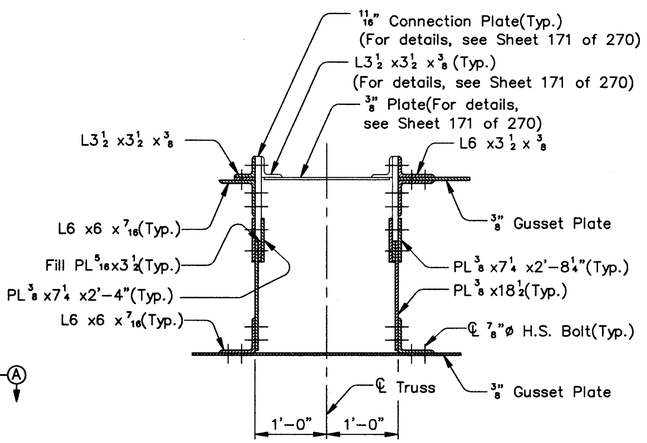

SECTION B–B

Notes:
Lower Deck Strut C between Floorbeams 4 and 5 North shown.
Lower Deck Strut C between Floorbeams 4 and 5 South symmetrical about ℄ Bridge.
Lower Deck Strut C between Floorbeams 4' and 5' North symmetrical about Panel Point 12.
Lower Deck Strut C between Floorbeams 4' and 5' South symmetrical about Panel Point 12 and ℄ Bridge.
(N.S.) denotes Near Side.
(F.S.) denotes Far Side.
For Lower Deck Floorbeam 5 Details, see Sheets and of .

COUNTY BRIDGE NO. 84

HOWARD NEEDLES TAMMEN & BERGENDOFF
ARCHITECTS ENGINEERS PLANNERS
HNTB

REPLACEMENT–LOWER DECK STRUT

BR. NO. CUY – 6 – 1499
REHABILITATION OF
VETERANS MEMORIAL BRIDGE
(U.S. 6, 20, 42 & S.R. 3 OVER CUYAHOGA RIVER)

CLEVELAND CUYAHOGA COUNTY OHIO

DRAWN J.L.V.	TRACED J.L.V.	CHECKED A.D.Y.	REVIEWED C.A.B.	REVISED
DATE 9/09/92	DATE 9/09/92	DATE 9/10/92	DATE 4/06/94	SHEET 170/270

\11646\STEEL\LDS4–5.DWG

303

FHWA REGION	STATE	PROJECT	
5	OHIO		

303
412

CUYAHOGA COUNTY
CUY – 6 – 14.99

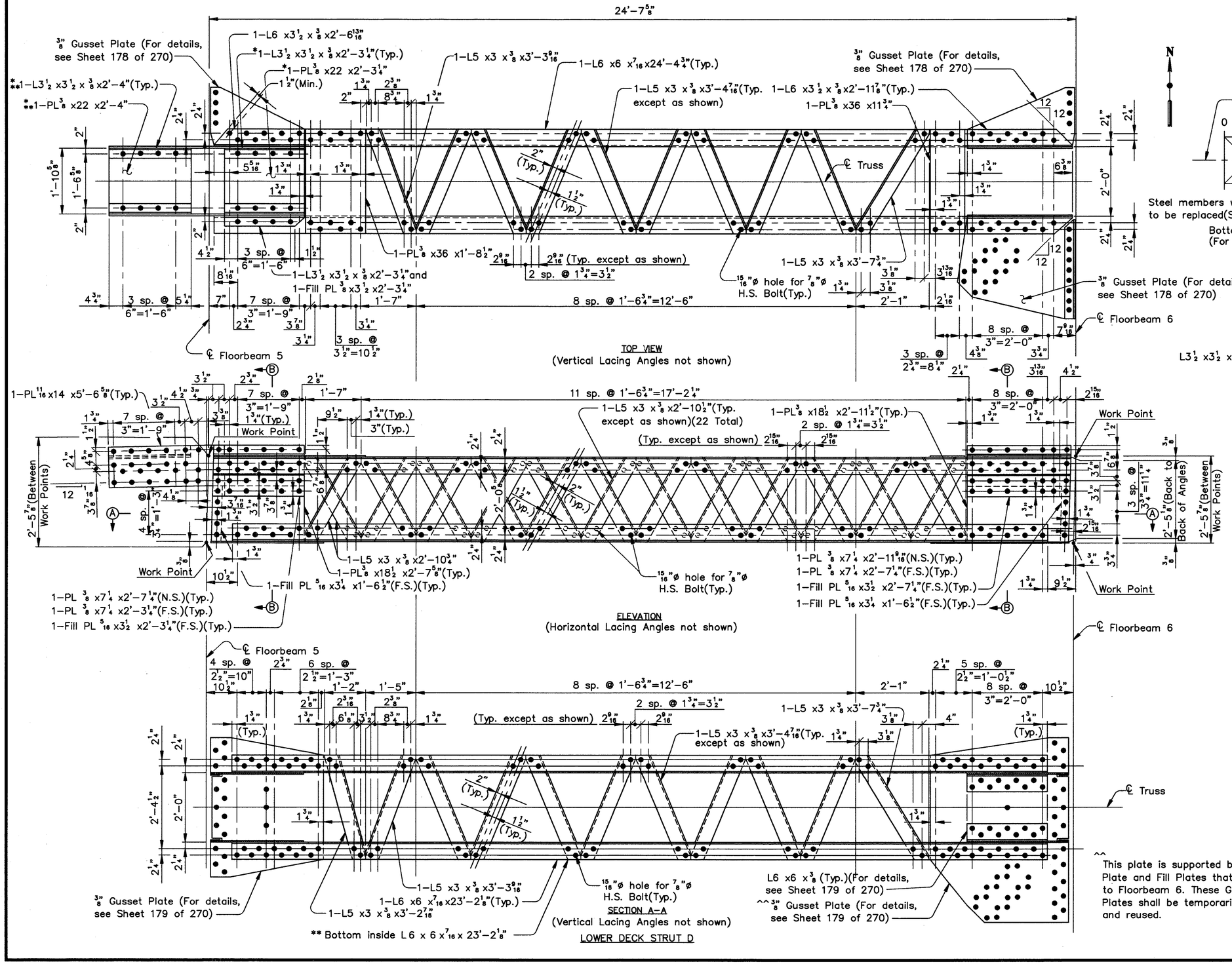

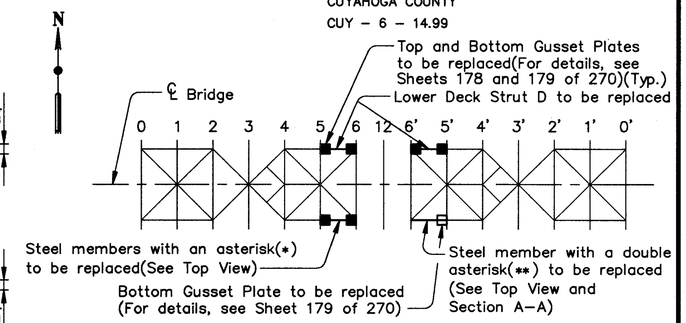

SCHEMATIC LOWER DECK FRAMING PLAN

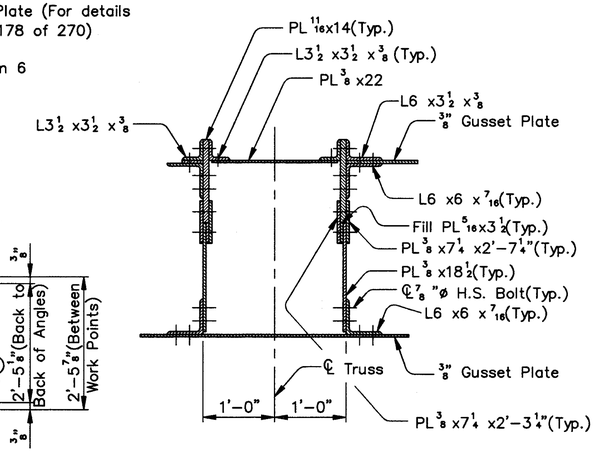

SECTION B–B
(Section B–B at Floorbeam 5 shown, Section B–B at Floorbeam 6 similar)

Notes:
Lower Deck Strut D between Floorbeams 5 and 6 North shown.
Lower Deck Strut D between Floorbeams 5' and 6' North symmetrical about Panel Point 12.
Lower Deck Strut D between Floorbeams 5' and 6' South symmetrical about Panel Point 12 and ℄ Bridge.
(N.S.) denotes Near Side.
(F.S.) denotes Far Side.
For Lower Deck Floorbeam 5 Details, see Sheets and of .

^^ This plate is supported by a Gusset Plate and Fill Plates that are attached to Floorbeam 6. These Gusset and Fill Plates shall be temporarily removed and reused.

COUNTY BRIDGE NO. 84

HOWARD NEEDLES TAMMEN & BERGENDOFF
ARCHITECTS ENGINEERS PLANNERS
HNTB

REPLACEMENT–LOWER DECK STRUT
BR. NO. CUY – 6 – 1499
REHABILITATION OF
VETERANS MEMORIAL BRIDGE
(U.S. 6, 20, 42 & S.R. 3 OVER CUYAHOGA RIVER)
CLEVELAND CUYAHOGA COUNTY OHIO

DRAWN	TRACED	CHECKED	REVIEWED	REVISED
J.L.V.	J.L.V.	A.D.Y.	C.A.B.	
DATE 9/09/92	DATE 9/09/92	DATE 9/10/92	DATE 4/06/94	SHEET 171/270

\11646\STEEL\LDS5–6.DWG

FHWA REGION	STATE	PROJECT	
5	OHIO		

304 / 412

CUYAHOGA COUNTY
CUY – 6 – 14.99

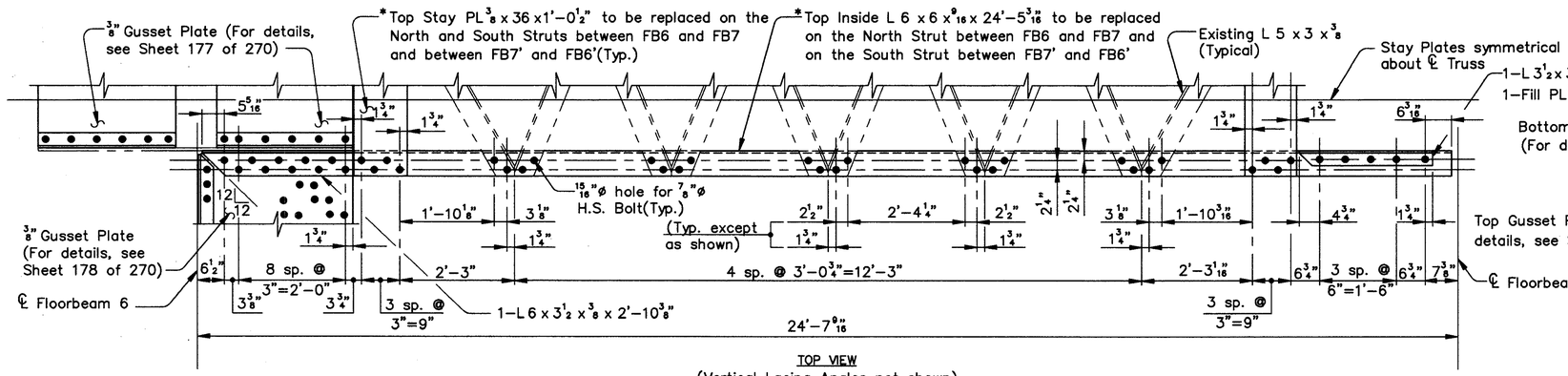

TOP VIEW
(Vertical Lacing Angles not shown)

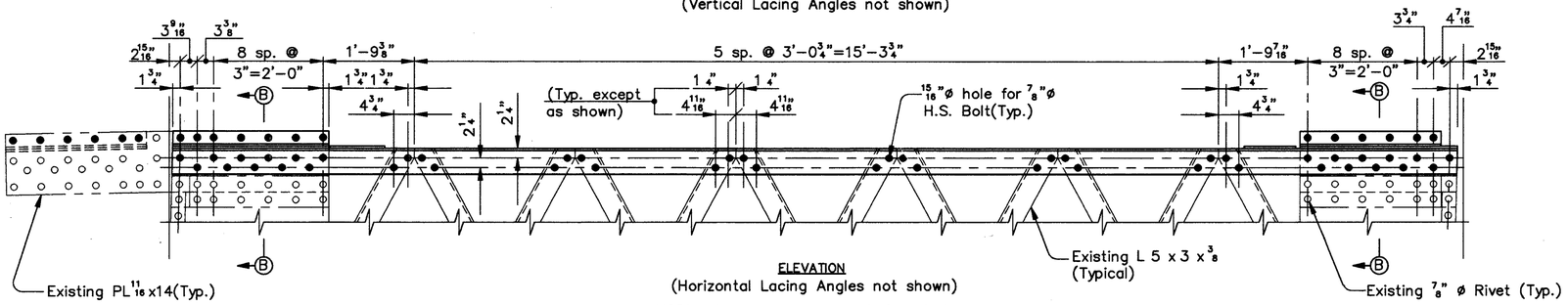

ELEVATION
(Horizontal Lacing Angles not shown)
NORTH STRUT – BETWEEN FB6 AND FB7

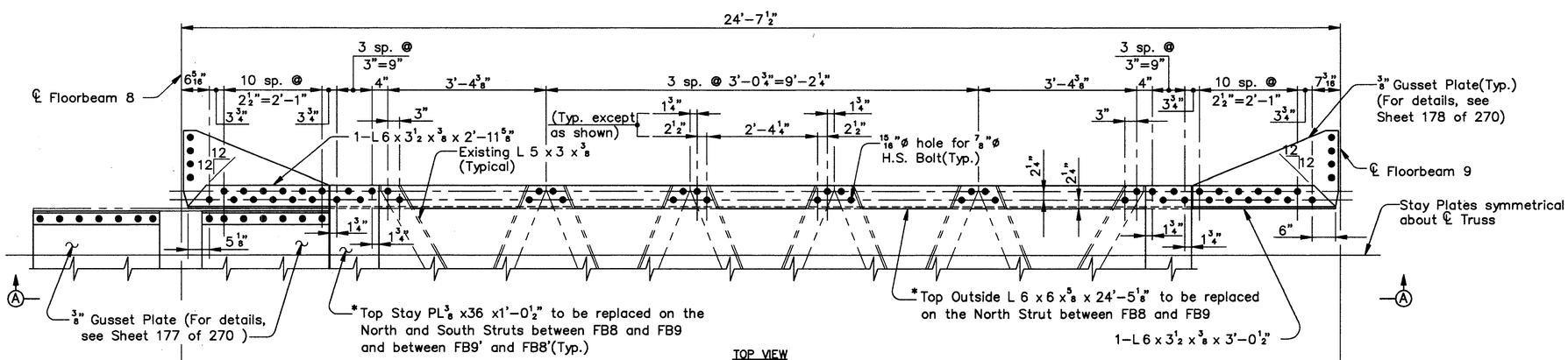

TOP VIEW
(Vertical Lacing Angles not shown)

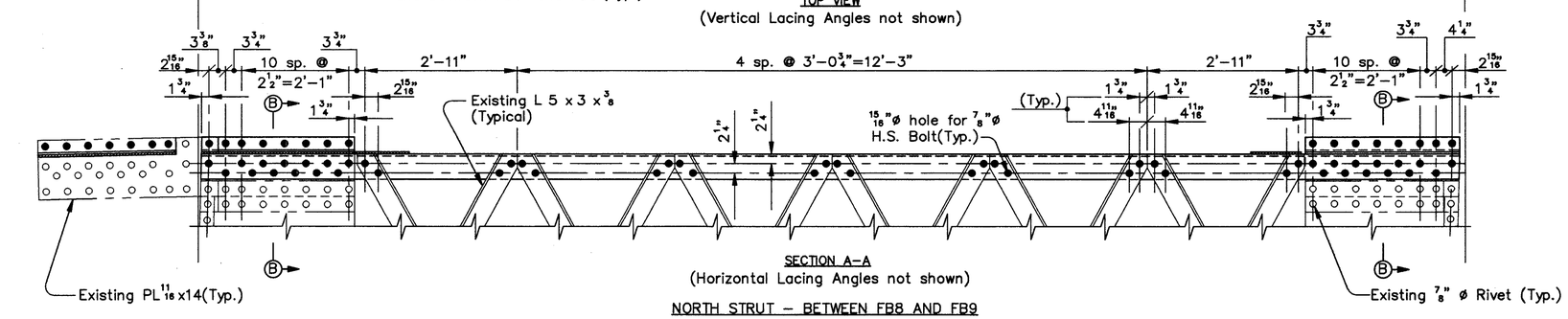

SECTION A–A
(Horizontal Lacing Angles not shown)
NORTH STRUT – BETWEEN FB8 AND FB9

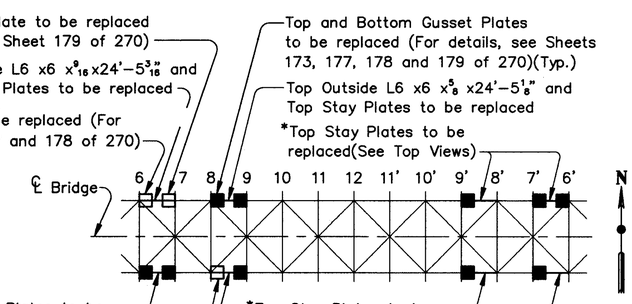

SCHEMATIC LOWER DECK FRAMING PLAN

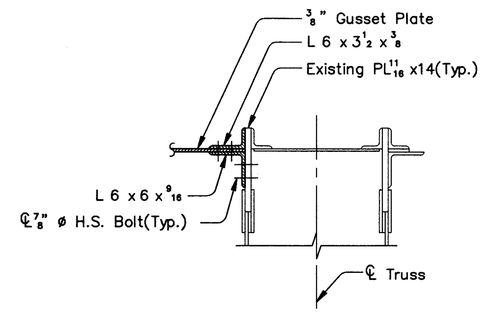

SECTION B–B
(Section B–B at Floorbeam 6 shown, all others similar)

Note:
FB denotes Floorbeam.

COUNTY BRIDGE NO. 84

HOWARD NEEDLES TAMMEN & BERGENDOFF
ARCHITECTS ENGINEERS PLANNERS
HNTB

REPLACEMENT–LOWER DECK STRUTS
BR. NO. CUY – 6 – 1499
REHABILITATION OF
VETERANS MEMORIAL BRIDGE
(U.S. 6, 20, 42 & S.R. 3 OVER CUYAHOGA RIVER)
CLEVELAND CUYAHOGA COUNTY OHIO

DRAWN J.L.V.	TRACED J.L.V.	CHECKED A.D.Y.	REVIEWED C.A.B.	REVISED
DATE 10/20/92	DATE 10/20/92	DATE 10/23/92	DATE 4/06/94	SHEET 172/270

\11646\STEEL\LDS6-7.DWG

FHWA REGION	STATE	PROJECT	
5	OHIO		

305
412

CUYAHOGA COUNTY
CUY – 6 – 14.99

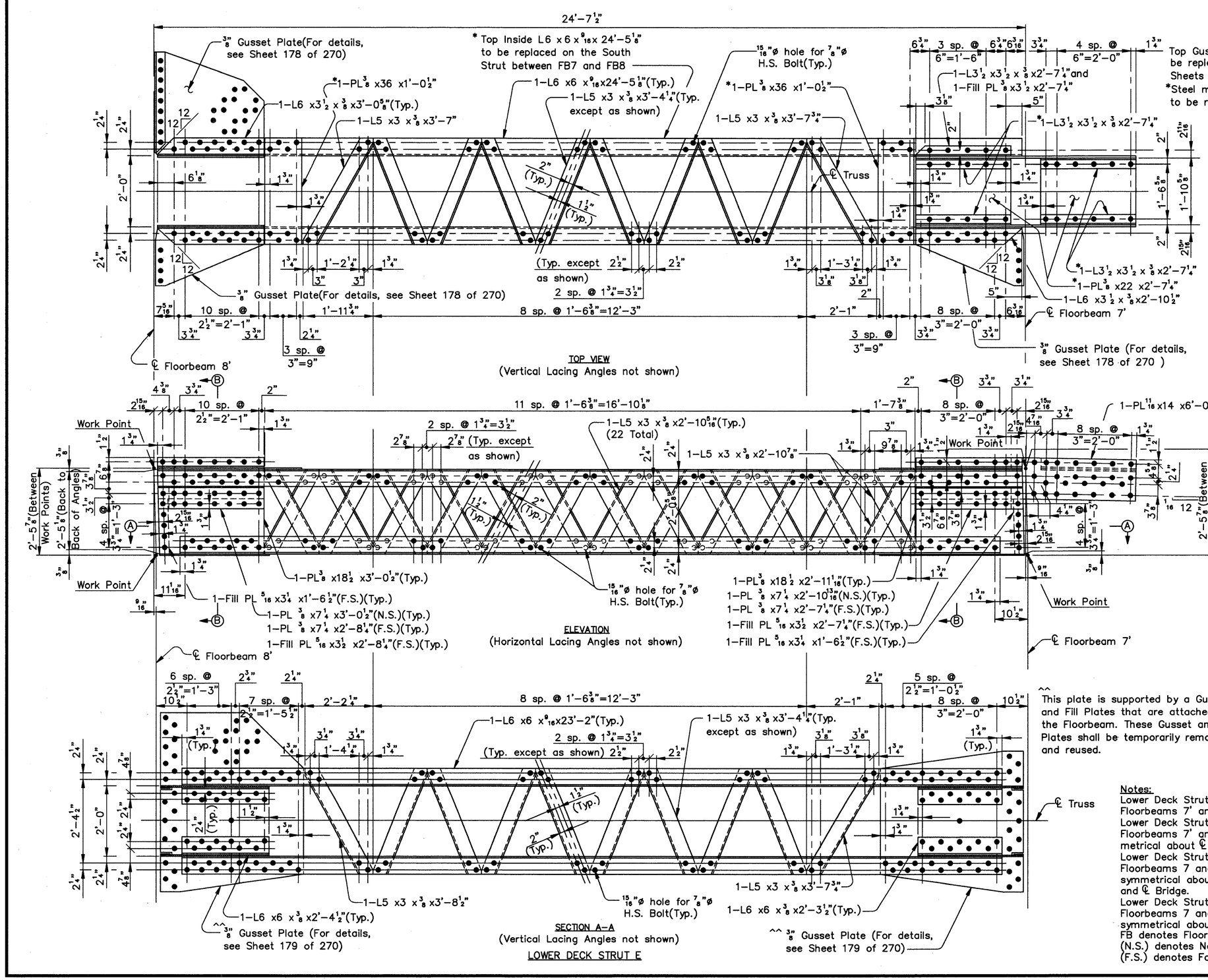

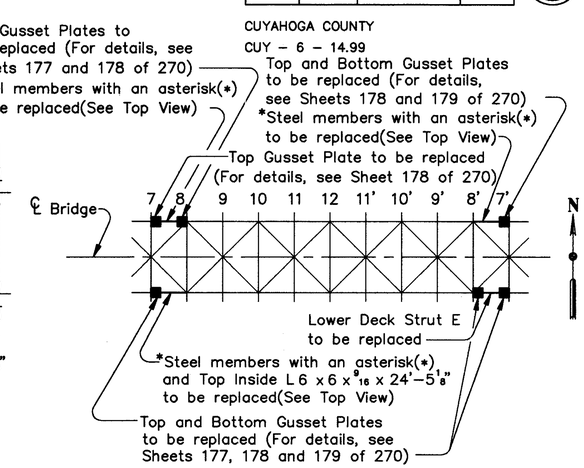

SCHEMATIC LOWER DECK FRAMING PLAN

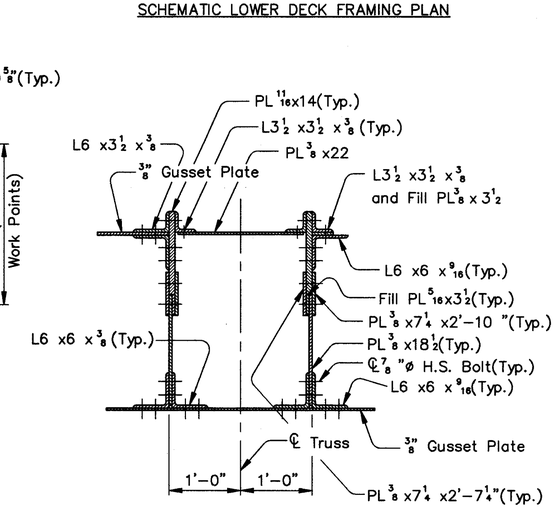

SECTION B–B
(Section B–B at Floorbeam 7' shown, Section B–B at Floorbeam 8' similar)

^^ This plate is supported by a Gusset and Fill Plates that are attached to the Floorbeam. These Gusset and Fill Plates shall be temporarily removed and reused.

Notes:
Lower Deck Strut E between Floorbeams 7' and 8' South shown.
Lower Deck Strut E between Floorbeams 7' and 8' North symmetrical about ℄ Bridge.
Lower Deck Strut E between Floorbeams 7 and 8 North symmetrical about Panel Point 12 and ℄ Bridge.
Lower Deck Strut E between Floorbeams 7 and 8 South symmetrical about Panel Point 12.
FB denotes Floorbeam.
(N.S.) denotes Near Side.
(F.S.) denotes Far Side.

COUNTY BRIDGE NO. 84

HOWARD NEEDLES TAMMEN & BERGENDOFF
ARCHITECTS ENGINEERS PLANNERS
HNTB

REPLACEMENT–LOWER DECK STRUT
BR. NO. CUY – 6 – 1499
REHABILITATION OF
VETERANS MEMORIAL BRIDGE
(U.S. 6, 20, 42 & S.R. 3 OVER CUYAHOGA RIVER)
CLEVELAND CUYAHOGA COUNTY OHIO

DRAWN J.L.V.	TRACED J.L.V.	CHECKED A.D.Y.	REVIEWED C.A.B.	REVISED
DATE 10/14/92	DATE 10/14/92	DATE 10/21/92	DATE 4/06/94	SHEET 173/270

\11646\STEEL\LDS7-8.DWG

FHWA REGION	STATE	PROJECT	
5	OHIO		

306/412

CUYAHOGA COUNTY
CUY – 6 – 14.99

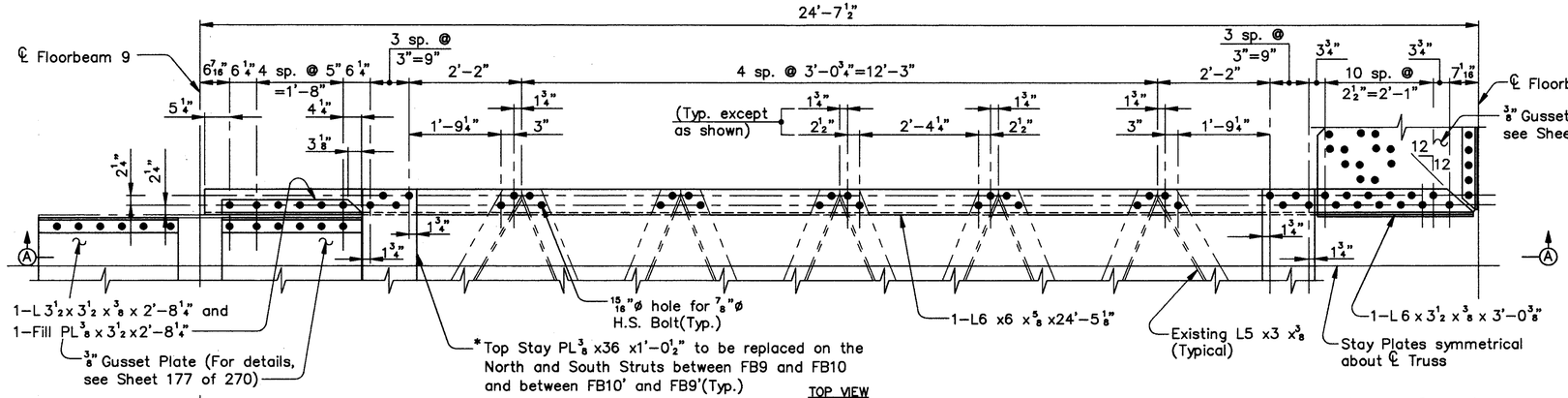

TOP VIEW
(Vertical Lacing Angles not shown)

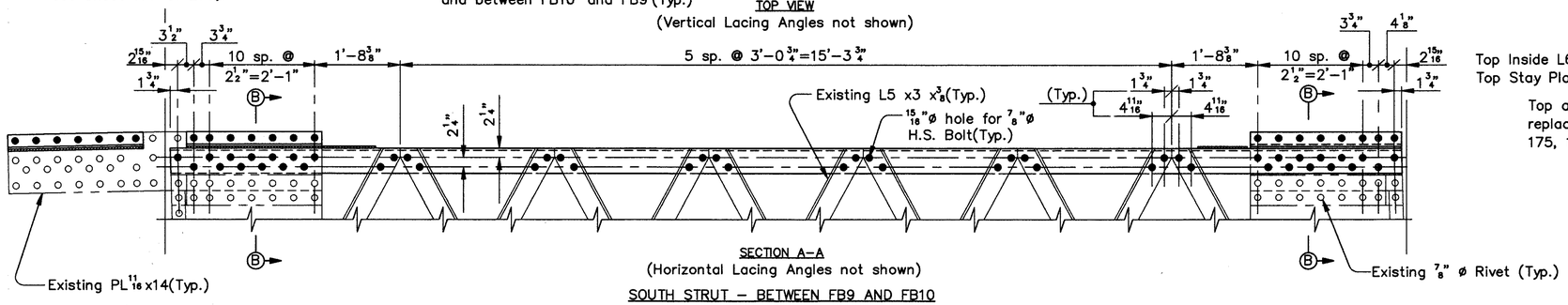

SECTION A–A
(Horizontal Lacing Angles not shown)
SOUTH STRUT – BETWEEN FB9 AND FB10

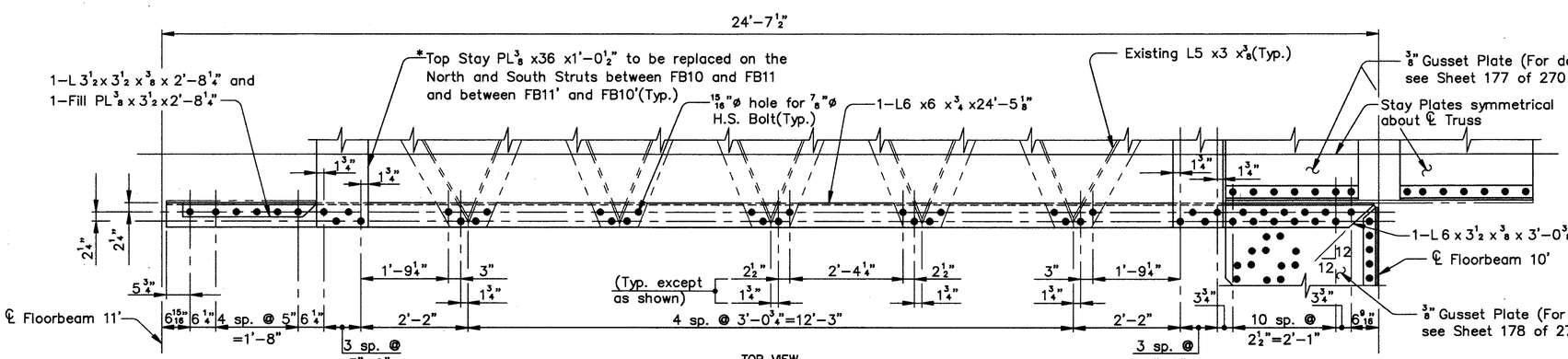

TOP VIEW
(Vertical Lacing Angles not shown)

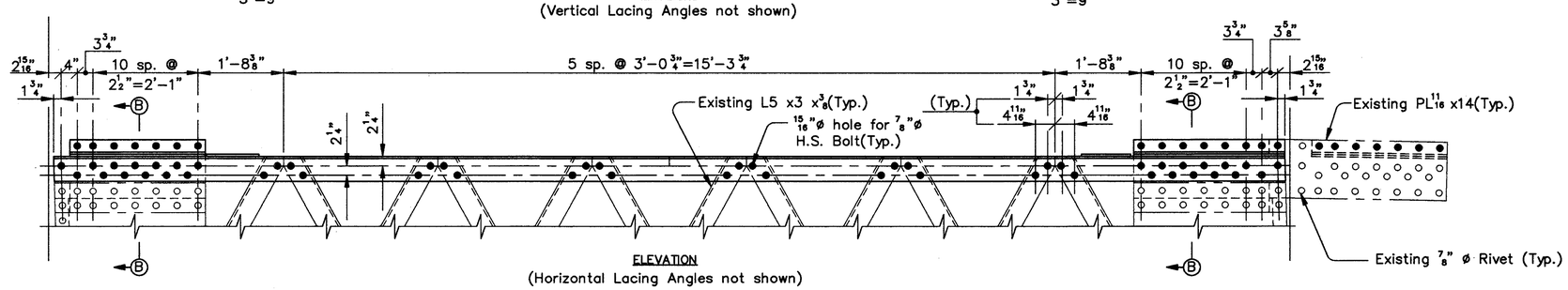

ELEVATION
(Horizontal Lacing Angles not shown)
NORTH STRUT – BETWEEN FB11' AND FB10'

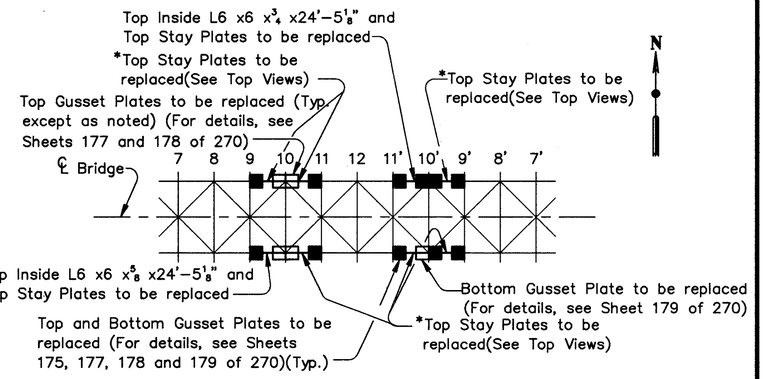

SCHEMATIC LOWER DECK FRAMING PLAN

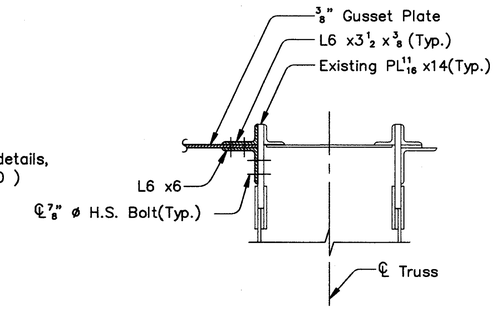

SECTION B–B
(Section B–B at Floorbeam 10 and 10' shown, all others similar)

Note:
FB denotes Floorbeam.

COUNTY BRIDGE NO. 84

HOWARD NEEDLES TAMMEN & BERGENDOFF
ARCHITECTS ENGINEERS PLANNERS
HNTB

REPLACEMENT–LOWER DECK STRUTS
BR. NO. CUY – 6 – 1499
REHABILITATION OF
VETERANS MEMORIAL BRIDGE
(U.S. 6, 20, 42 & S.R. 3 OVER CUYAHOGA RIVER)

CLEVELAND CUYAHOGA COUNTY OHIO

DRAWN	TRACED	CHECKED	REVIEWED	REVISED
J.L.V.	J.L.V.	A.D.Y.	C.A.B.	
DATE 9/10/92	DATE 9/10/92	DATE 9/11/92	DATE 4/06/94	SHEET 174/270

\11646\STEEL\LDS9–11.DWG

FHWA REGION	STATE	PROJECT	
5	OHIO		

307
412

CUYAHOGA COUNTY
CUY – 6 – 14.99

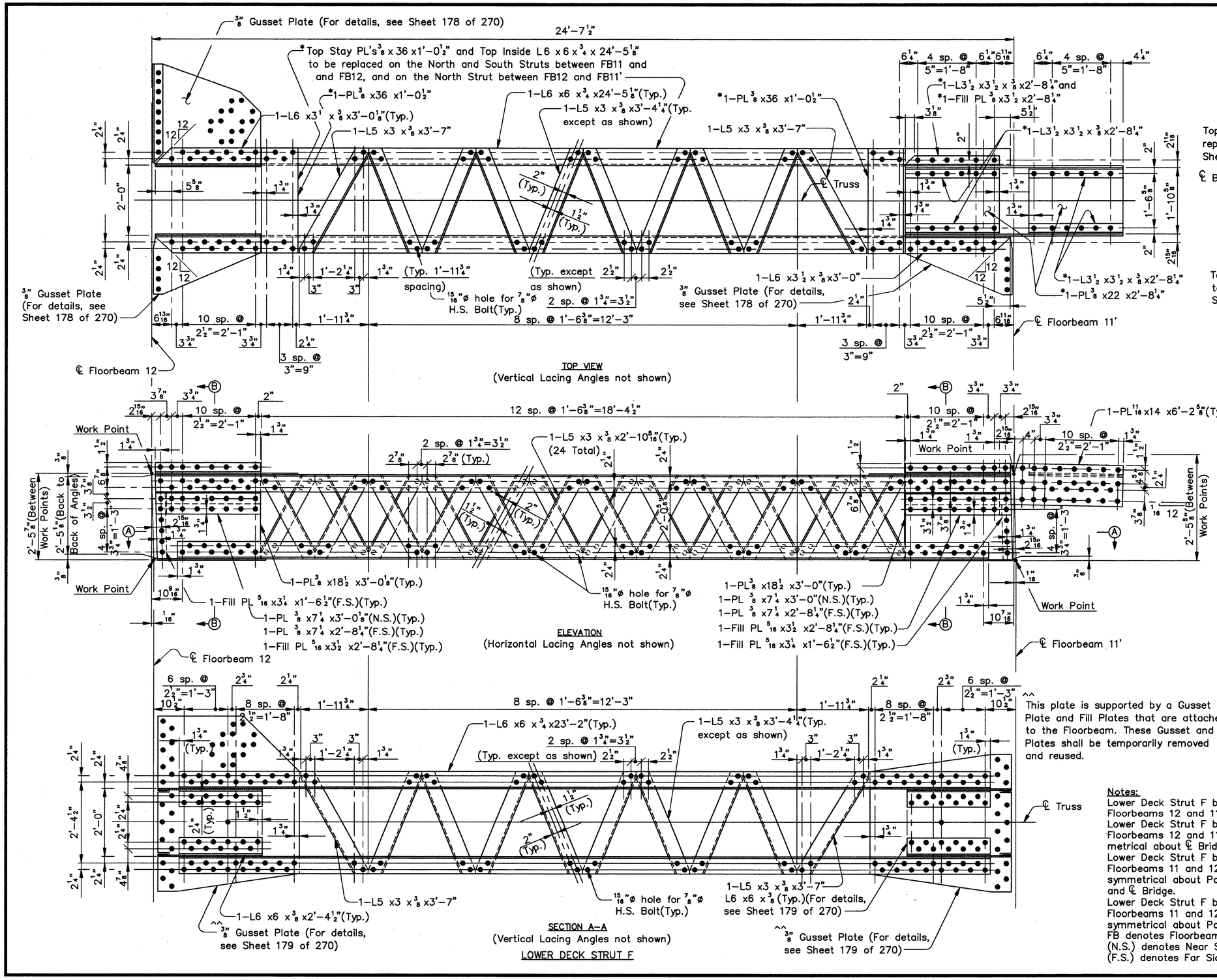

This plate is supported by a Gusset Plate and Fill Plates that are attached to the Floorbeam. These Gusset and Fill Plates shall be temporarily removed and reused.

*Steel members with an asterisk(*) and Top Inside L6 x6 x 3/4 x24'–5 1/8" to be replaced(See Top View)

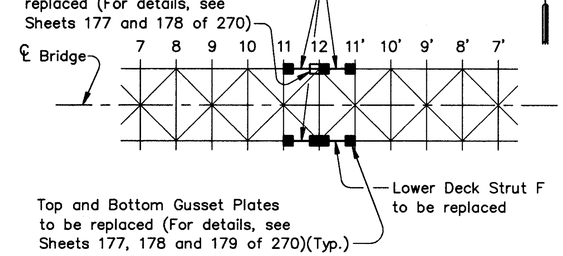

SCHEMATIC LOWER DECK FRAMING PLAN

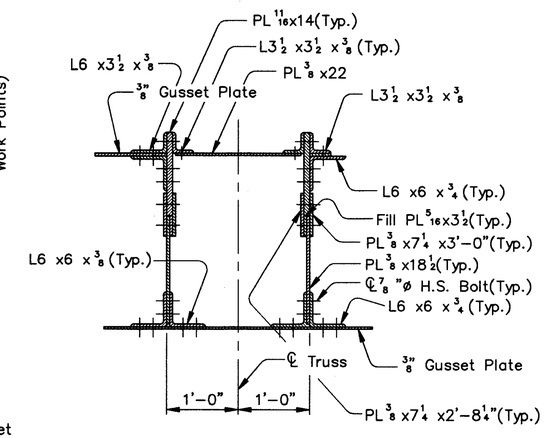

SECTION B–B
(Section B–B at Floorbeam 11' shown, Section B–B at Floorbeam 12 similar)

Notes:
Lower Deck Strut F between Floorbeams 12 and 11' South shown.
Lower Deck Strut F between Floorbeams 12 and 11' North symmetrical about ℄ Bridge.
Lower Deck Strut F between Floorbeams 11 and 12 North symmetrical about Panel Point 12 and ℄ Bridge.
Lower Deck Strut F between Floorbeams 11 and 12 South symmetrical about Panel Point 12.
FB denotes Floorbeam.
(N.S.) denotes Near Side.
(F.S.) denotes Far Side.

COUNTY BRIDGE NO. 84

HOWARD NEEDLES TAMMEN & BERGENDOFF
ARCHITECTS ENGINEERS PLANNERS
HNTB

REPLACEMENT–LOWER DECK STRUT
BR. NO. CUY – 6 – 1499
REHABILITATION OF
VERTEANS MEMORIAL BRIDGE
(U.S. 6, 20, 42 & S.R. 3 OVER CUYAHOGA RIVER)
CLEVELAND CUYAHOGA COUNTY OHIO

DRAWN	TRACED	CHECKED	REVIEWED	REVISED
J.L.V.	J.L.V.	A.D.Y.	C.A.B.	
DATE 9/10/92	DATE 9/10/92	DATE 9/11/92	DATE 4/06/94	SHEET 175/270

\11646\STEEL\LDS11-12.DWG

FHWA REGION	STATE	PROJECT	
5	OHIO		

308/412

CUYAHOGA COUNTY
CUY – 6 – 14.99

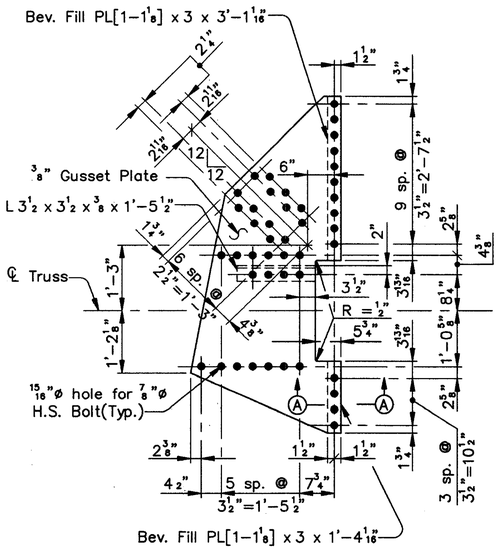

TOP GUSSET PLATE A

LOCATION
0–N, Panel 1
0'–N, Panel 1'
0–S, Panel 1
0'–S, Panel 1'

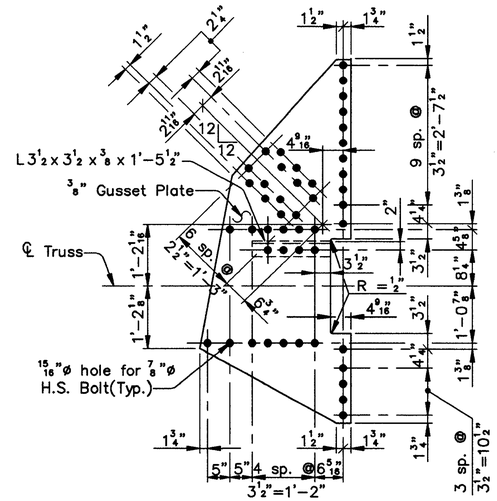

TOP GUSSET PLATE B

LOCATION
2–N, Panel 2
2'–N, Panel 2'
2–S, Panel 2
2'–S, Panel 2'

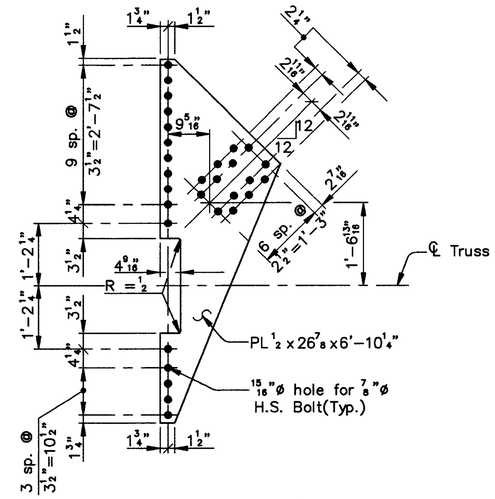

TOP LATERAL PLATE A

LOCATION
2–N, Panel 3
2–S, Panel 3
2'–S, Panel 3'

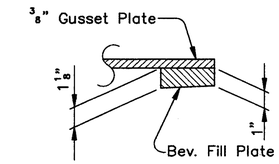

SECTION A–A

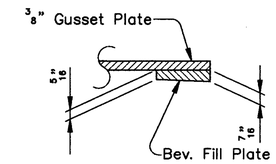

SECTION B–B

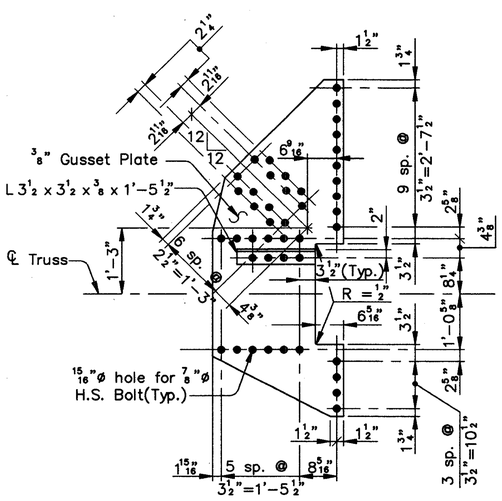

BOTTOM GUSSET PLATE A

LOCATION
0–S, Panel 1
0'–S, Panel 1'

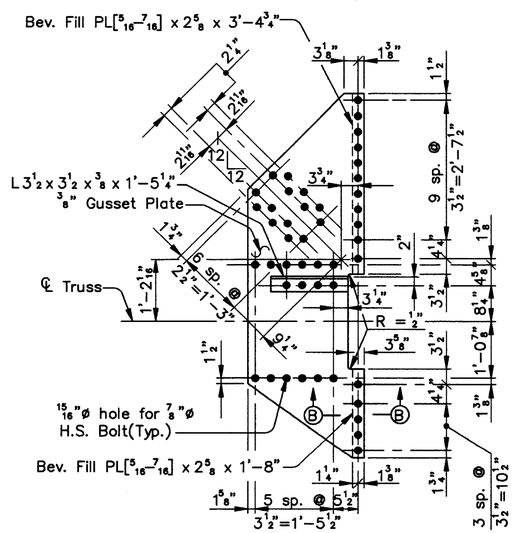

BOTTOM GUSSET PLATE B

LOCATION
2–S, Panel 2
2'–S, Panel 2'

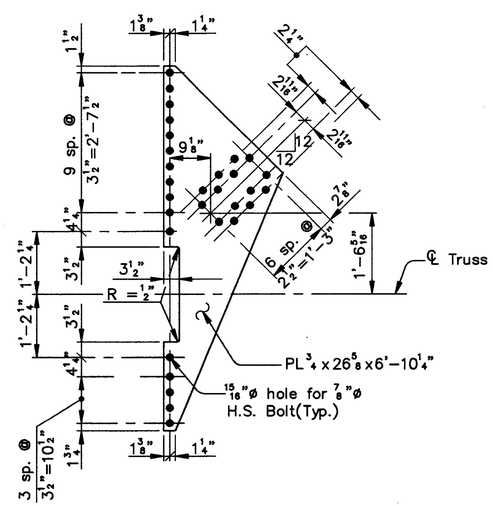

BOTTOM LATERAL PLATE A

LOCATION
2'–N, Panel 3'
2'–S, Panel 3'

COUNTY BRIDGE NO. 84

HOWARD NEEDLES TAMMEN & BERGENDOFF
ARCHITECTS ENGINEERS PLANNERS
HNTB

REPLACEMENT–LOWER DECK GUSSET PLATES
BR. NO. CUY – 6 – 1499
REHABILITATION OF
VETERANS MEMORIAL BRIDGE
(U.S. 6, 20, 42 & S.R. 3 OVER CUYAHOGA RIVER)
CLEVELAND CUYAHOGA COUNTY OHIO

DRAWN	TRACED	CHECKED	REVIEWED	REVISED
J.L.V.	J.L.V.	A.D.Y.	C.A.B.	
DATE 10/8/92	DATE 10/8/92	DATE 11/11/92	DATE 4/06/94	SHEET 176/270

\11646\STEEL\LD-GUSS1.DWG

FHWA REGION	STATE	PROJECT	
5	OHIO		

309 / 412

CUYAHOGA COUNTY
CUY – 6 – 14.99

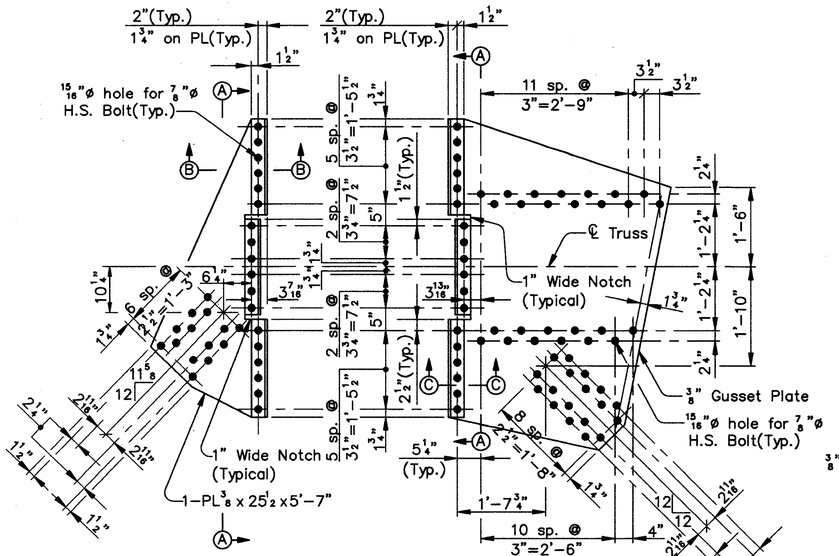

TOP LATERAL PLATE A

LOCATION
4–N, Panel 4
4'–N, Panel 4'
4–S, Panel 4
4'–S, Panel 4'

TOP GUSSET PLATE B

LOCATION
4–N, Panel 5
4'–N, Panel 5'
4–S, Panel 5
4'–S, Panel 5'

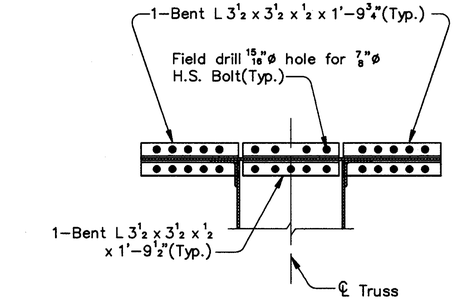

SECTION A–A
(Section thru Gusset Plate B shown, Section thru Lateral Plate A similar)

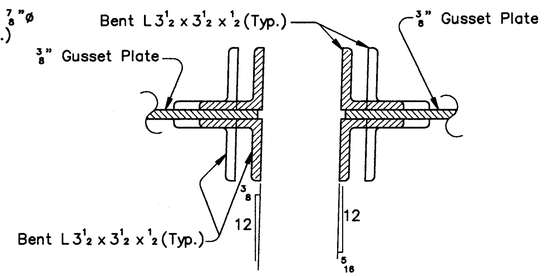

SECTION B–B SECTION C–C

ADDITIONAL HORIZONTAL LACING ANGLE REPLACEMENT LOCATIONS FOR LOWER DECK STRUTS					
TRUSS	BETWEEN	ORIENTATION	NO.	A	LENGTH
N	FB6 & FB7	(T) Right	2	4 13/16	3'–4 1/4"
N	FB6 & FB7	(B) Left	1	7 3/16	3'–7 3/4"
N	FB10 & FB11	(T) Left	1	6 3/4	3'–7"
N	FB11 & FB12	(T) Left	2	4 13/16	3'–4 1/4"
N	FB11 & FB12	(T) Left	1	6 3/4	3'–7"
N	FB11 & FB12	(B) Left	1	4 13/16	3'–4 1/4"
N	FB11 & FB12	(B) Right	1	6 3/4	3'–7"
N	FB11'& FB12	(T) Right	1	4 13/16	3'–4 1/4"
N	FB11'& FB12	(T) Left	1	4 13/16	3'–4 1/4"
N	FB11'& FB12	(B) Right	1	6 3/4	3'–7"
N	FB9' & FB10'	(T) Left	2	4 13/16	3'–4 1/4"
N	FB8' & FB9'	(T) Left	1	6 3/4	3'–7"
N	FB8' & FB9'	(B) Right	1	4 13/16	3'–4 1/4"
N	FB7' & FB8'	(T) Left	1	4 13/16	3'–4 1/4"
N	FB6' & FB7'	(B) Right	1	4 13/16	3'–4 1/4"
N	FB6' & FB7'	(B) Left	1	7 3/16	3'–7 3/4"
S	FB5 & FB6	(T) Right	1	4 3/8	3'–3 9/16"
S	FB5 & FB6	(T) Left	1	5	3'–4 7/16"
S	FB6 & FB7	(T) Left	2	4 13/16	3'–4 1/4"
S	FB6 & FB7	(T) Left	1	7 3/16	3'–7 3/4"
S	FB6 & FB7	(B) Left	1	7 3/16	3'–7 3/4"
S	FB7 & FB8	(T) Right	1	4 13/16	3'–4 1/4"
S	FB7 & FB8	(T) Left	3	4 13/16	3'–4 1/4"
S	FB8 & FB9	(T) Left	1	6 3/4	3'–7"
S	FB9 & FB10	(T) Left	1	6 3/4	3'–7"
S	FB10 & FB11	(T) Left	1	6 3/4	3'–7"
S	FB10 & FB11	(B) Left	1	6 3/4	3'–7"
S	FB9' & FB10'	(T) Left	1	4 13/16	3'–4 1/4"
S	FB8' & FB9'	(T) Right	1	4 13/16	3'–4 1/4"
S	FB8' & FB9'	(T) Left	1	4 13/16	3'–4 1/4"
S	FB8' & FB9'	(T) Left	1	6 3/4	3'–7"
S	FB6' & FB7'	(T) Right	1	4 13/16	3'–4 1/4"
S	FB6' & FB7'	(T) Left	1	7 3/16	3'–7 3/4"
S	FB5' & FB6'	(T) Left	2	5	3'–4 7/16"
S	FB5' & FB6'	(T) Left	1	4 3/8	3'–3 9/16"
S	FB5' & FB6'	(B) Left	1	5	3'–4 7/16"
S	FB5' & FB6'	(B) Left	1	4 3/8	3'–3 9/16"
S	FB5' & FB6'	(B) Right	1	3 1/4	3'–2 7/16"

Note:
Angles to be replaced will be marked in the field by the Engineer.

Note:
For additional Top Gusset Plate C replacement locations, see Sheets 171, 173, and 175 of 270.
Field drill holes in vertical leg of angles to match existing.

TOP GUSSET PLATE C						
LOCATION	A	B	C	D	E	F
6–N, Panel 6	4	6"	2'–0"	3 3/4"	2'–7 1/4"	1 3/4"
6–N, Panel 7	4	6"	2'–0"	3 3/8"	2'–6 7/8"	1 3/4"
8–N, Panel 8	5	5"	2'–1"	3 3/4"	2'–8 1/4"	1 3/4"
8–N, Panel 9	5	5"	2'–1"	3 3/4"	2'–8 1/4"	1 3/4"
9–N, Panel 9	5	5"	2'–1"	3 3/4"	2'–8 1/4"	1 3/4"
9–N, Panel 10	4	5"	1'–8"	6 1/4"	2'–8 1/4"	4 1/4"
10–N, Panel 10	5	5"	2'–1"	3 3/4"	2'–8 1/4"	1 3/4"
10–N, Panel 11	5	5"	2'–1"	3 3/4"	2'–8 1/4"	1 3/4"
12–N, Panel 12	5	5"	2'–1"	3 3/4"	2'–8 1/4"	1 3/4"
12–N, Panel 12'	5	5"	2'–1"	3 3/4"	2'–8 1/4"	1 3/4"
10'–N, Panel 11'	5	5"	2'–1"	3 3/4"	2'–8 1/4"	1 3/4"
10'–N, Panel 10'	5	5"	2'–1"	3 3/4"	2'–8 1/4"	1 3/4"
9'–N, Panel 10'	4	5"	1'–8"	6 1/4"	2'–8 1/4"	4 1/4"
9'–N, Panel 9'	5	5"	2'–1"	3 3/4"	2'–8 1/4"	1 3/4"
6'–N, Panel 7'	4	6"	2'–0"	3 3/8"	2'–6 7/8"	1 3/4"
6'–N, Panel 6'	4	6"	2'–0"	3 3/4"	2'–7 1/4"	1 3/4"
6–S, Panel 6	4	6"	2'–0"	3 3/4"	2'–7 1/4"	1 3/4"
6–S, Panel 7	4	6"	2'–0"	3 3/8"	2'–6 7/8"	1 3/4"
8–S, Panel 9	5	5"	2'–1"	3 3/4"	2'–8 1/4"	1 3/4"
9–S, Panel 9	5	5"	2'–1"	3 3/4"	2'–8 1/4"	1 3/4"
9–S, Panel 10	4	5"	1'–8"	6 1/4"	2'–8 1/4"	4 1/4"
10–S, Panel 10	5	5"	2'–1"	3 3/4"	2'–8 1/4"	1 3/4"
10–S, Panel 11	5	5"	2'–1"	3 3/4"	2'–8 1/4"	1 3/4"
12–S, Panel 12	5	5"	2'–1"	3 3/4"	2'–8 1/4"	1 3/4"
12–S, Panel 12'	5	5"	2'–1"	3 3/4"	2'–8 1/4"	1 3/4"
10'–S, Panel 10'	5	5"	2'–1"	3 3/4"	2'–8 1/4"	1 3/4"
9'–S, Panel 10'	4	5"	1'–8"	6 1/4"	2'–8 1/4"	4 1/4"
9'–S, Panel 9'	5	5"	2'–1"	3 3/4"	2'–8 1/4"	1 3/4"
8'–S, Panel 8'	5	5"	2'–1"	3 3/4"	2'–8 1/4"	1 3/4"

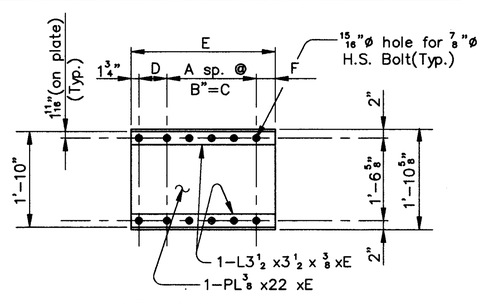

TOP GUSSET PLATE C

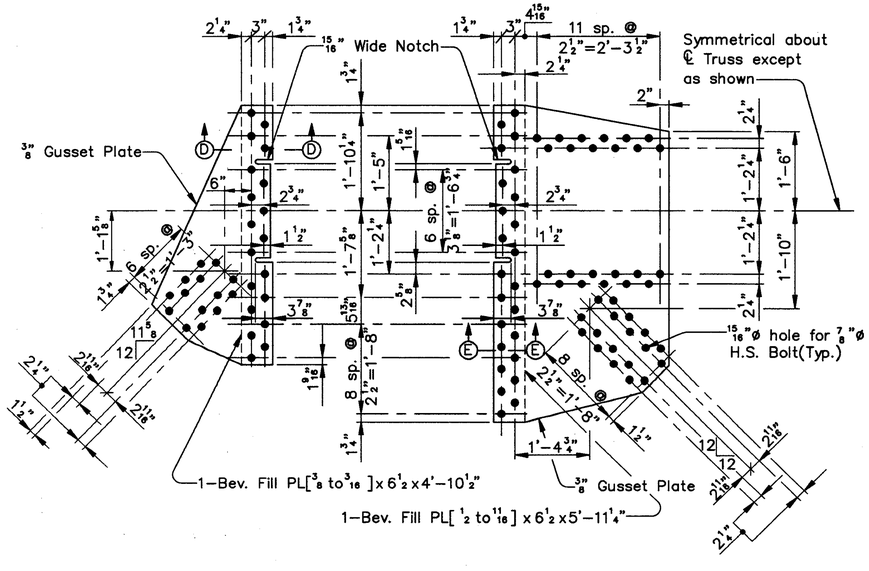

BOTTOM LATERAL PLATE A

LOCATION
4–N, Panel 4
4–S, Panel 4
4'–S, Panel 4'

BOTTOM GUSSET PLATE B

LOCATION
4–N, Panel 5
4'–N, Panel 5'
4–S, Panel 5
4'–S, Panel 5'

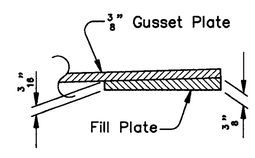

SECTION D–D

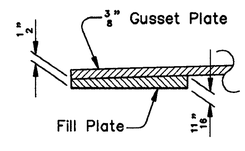

SECTION E–E

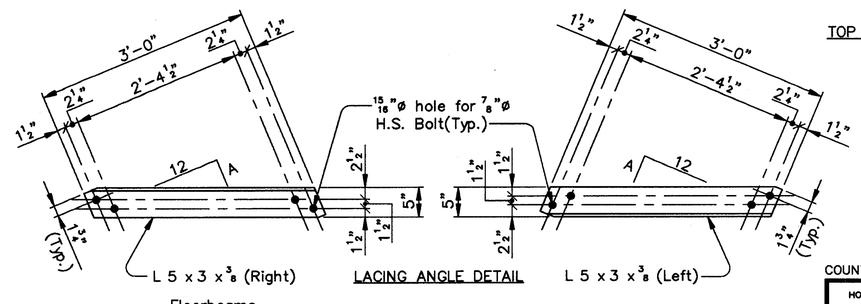

LACING ANGLE DETAIL

Notes:
FB denotes Floorbeam.
T denotes Top angle
B denotes Bottom angle

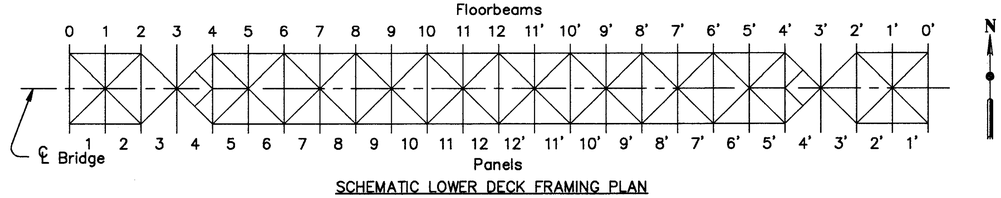

SCHEMATIC LOWER DECK FRAMING PLAN

COUNTY BRIDGE NO. 84

HOWARD NEEDLES TAMMEN & BERGENDOFF
ARCHITECTS ENGINEERS PLANNERS
HNTB

REPLACEMENT–LOWER DECK GUSSET PLATES
BR. NO. CUY – 6 – 1499
REHABILITATION OF
VETERANS MEMORIAL BRIDGE
(U.S. 6, 20, 42 & S.R. 3 OVER CUYAHOGA RIVER)
CLEVELAND CUYAHOGA COUNTY OHIO

DRAWN J.L.V.	TRACED J.L.V.	CHECKED A.D.Y.	REVIEWED C.A.B.	REVISED
DATE 9/17/92	DATE 9/17/92	DATE 9/18/92	DATE 4/06/94	SHEET 177/270

\11646\STEEL\LD-GUSS2.DWG

FHWA REGION	STATE	PROJECT	
5	OHIO		

310
412

CUYAHOGA COUNTY
CUY – 6 – 14.99

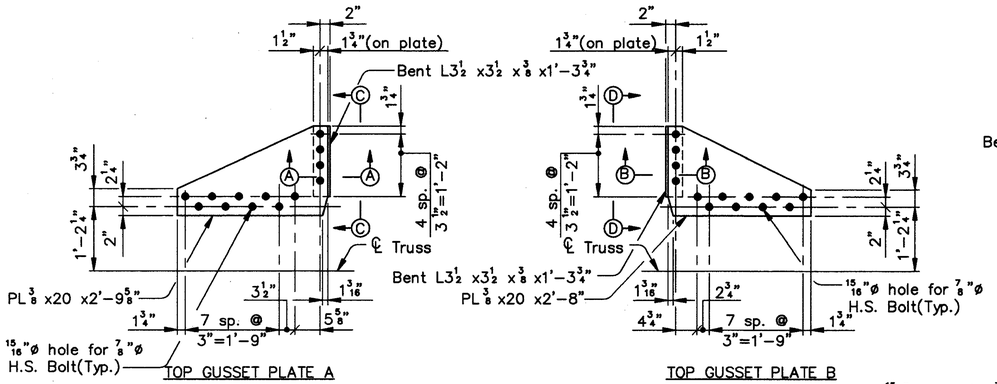

TOP GUSSET PLATE A

TOP GUSSET PLATE B

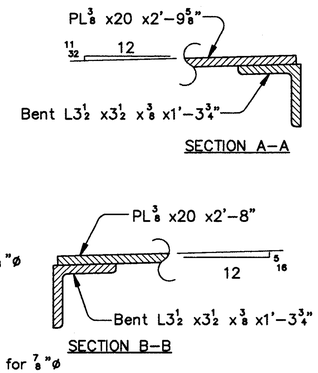

SECTION A–A

SECTION B–B

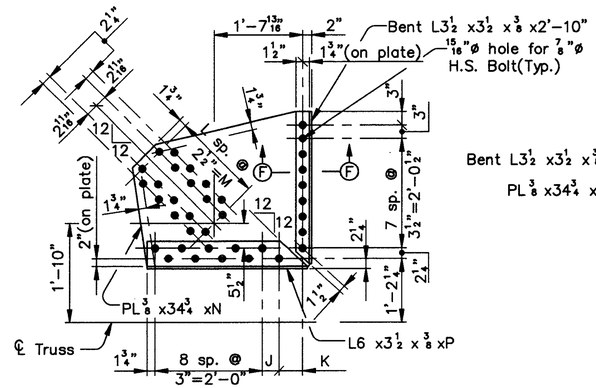

TOP GUSSET PLATE C

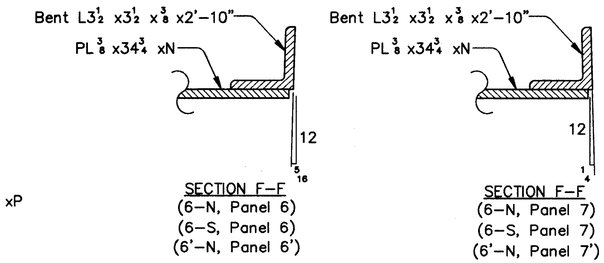

SECTION F–F
(6–N, Panel 6)
(6–S, Panel 6)
(6'–N, Panel 6')

SECTION F–F
(6–N, Panel 7)
(6–S, Panel 7)
(6'–N, Panel 7')

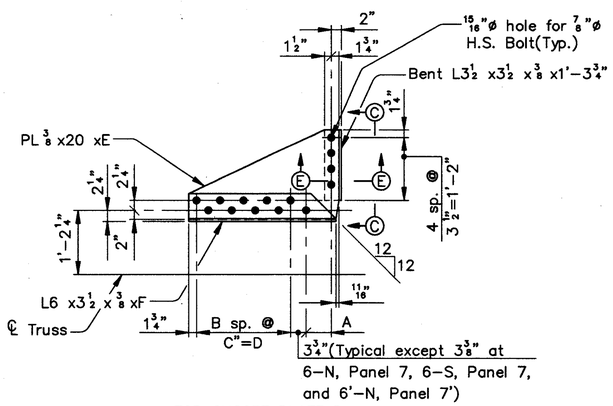

TOP GUSSET PLATE D

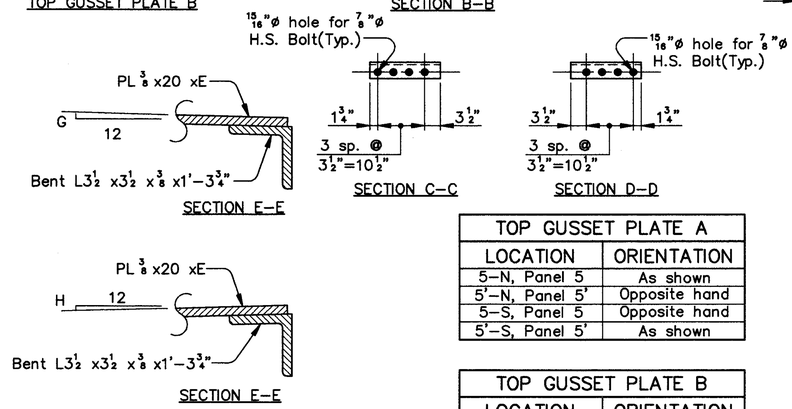

SECTION E–E

SECTION C–C

SECTION D–D

SECTION E–E

TOP GUSSET PLATE A	
LOCATION	ORIENTATION
5–N, Panel 5	As shown
5'–N, Panel 5'	Opposite hand
5–S, Panel 5	Opposite hand
5'–S, Panel 5'	As shown

TOP GUSSET PLATE B	
LOCATION	ORIENTATION
5–N, Panel 6	As shown
5'–N, Panel 6'	Opposite hand
5–S, Panel 6	Opposite hand

TOP GUSSET PLATE C							
LOCATION	J	K	L	M	N	P	ORIENTATION
6–N, Panel 6	3 3/4"	5 1/4"	8	1'–8"	3'–3 5/8"	2'–11 13/16"	Opposite hand
6'–N, Panel 6'	3 3/4"	5 1/4"	8	1'–8"	3'–3 5/8"	2'–11 13/16"	As shown
6–S, Panel 6	3 3/4"	5 1/4"	8	1'–8"	3'–3 5/8"	2'–11 13/16"	As shown
6–N, Panel 7	3 3/8"	4 1/4"	6	1'–3"	2'–11 3/4"	2'–10 3/8"	As shown
6'–N, Panel 7'	3 3/8"	4 1/4"	6	1'–3"	2'–11 3/4"	2'–10 3/8"	Opposite hand
6–S, Panel 7	3 3/8"	4 1/4"	6	1'–3"	2'–11 3/4"	2'–10 3/8"	Opposite hand

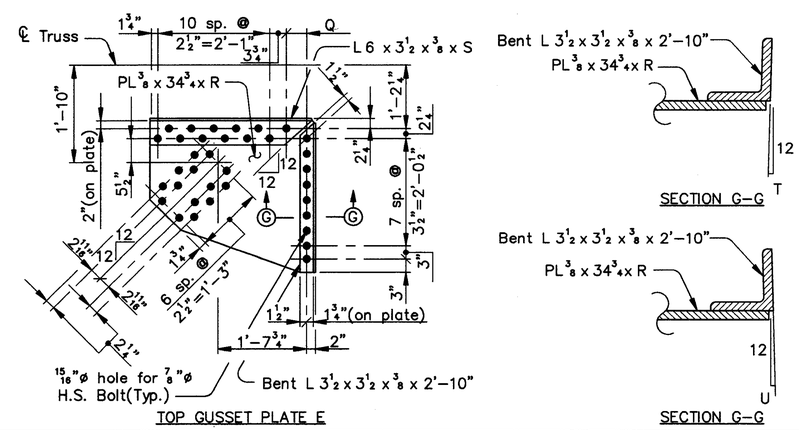

TOP GUSSET PLATE E

SECTION G–G

SECTION G–G

TOP GUSSET PLATE D									
LOCATION	A	B	C	D	E	F	G	H	ORIENTATION
6–N, Panel 6	5 1/4"	8	3"	2'–0"	3'–0 1/2"	2'–11 13/16"	–	5/16	As shown
6–N, Panel 7	4 1/4"	8	3"	2'–0"	2'–11 1/16"	2'–10 3/8"	1/4	–	Opposite hand
7'–S, Panel 7'	5 3/16"	8	3"	2'–0"	3'–0 7/16"	2'–11 3/4"	–	1/4	As shown
7–N, Panel 8 and 7'–S, Panel 8'	3 15/16"	8	3"	2'–0"	2'–11 3/16"	2'–10 1/2"	3/16	–	Opposite hand
8–N, Panel 8 and 8'–S, panel 8'	5 1/16"	10	2 1/2"	2'–1"	3'–1 5/16"	3'–0 5/8"	–	3/16	As shown
8–N, Panel 9	4 1/16"	10	2 1/2"	2'–1"	3'–0 5/16"	2'–11 5/8"	1/8	–	Opposite hand
9–N, Panel 9 and 9'–S, Panel 9'	4 15/16"	10	2 1/2"	2'–1"	3'–1 3/16"	3'–0 1/2"	–	1/8	As shown
9–N, Panel 10 and 9'–S, Panel 10'	4 3/16"	10	2 1/2"	2'–1"	3'–0 7/16"	2'–11 3/4"	1/8	–	Opposite hand
10–N, Panel 10 and 10'–S, Panel 10'	4 13/16"	10	2 1/2"	2'–1"	3'–1 1/16"	3'–0 3/8"	–	1/8	As shown
10–N, Panel 11	4 5/16"	10	2 1/2"	2'–1"	3'–0 9/16"	2'–11 7/8"	1/16	–	Opposite hand
11–N, Panel 11 and 11'–S, Panel 11'	4 11/16"	10	2 1/2"	2'–1"	3'–0 15/16"	3'–0 1/4"	–	1/16	As shown
11–N, Panel 12 and 11'–S, Panel 12'	4 7/16"	10	2 1/2"	2'–1"	3'–0 11/16"	3'–0"	–	–	Opposite hand
12–N, Panel 12 and 12–S, Panel 12'	4 9/16"	10	2 1/2"	2'–1"	3'–0 13/16"	3'–0 1/8"	–	–	As shown
12–S, Panel 12 and 12–N, Panel 12'	4 9/16"	10	2 1/2"	2'–1"	3'–0 13/16"	3'–0 1/8"	–	–	Opposite hand
11–S, Panel 12 and 11'–N, Panel 12'	4 7/16"	10	2 1/2"	2'–1"	3'–0 11/16"	3'–0"	–	–	As shown
11–S, Panel 11 and 11'–N, Panel 11'	4 11/16"	10	2 1/2"	2'–1"	3'–0 15/16"	3'–0 1/4"	–	1/16	Opposite hand
10–S, Panel 11 and 10'–N, Panel 11'	4 5/16"	10	2 1/2"	2'–1"	3'–0 9/16"	2'–11 7/8"	1/16	–	As shown
10–S, Panel 10 and 10'–N, Panel 10'	4 13/16"	10	2 1/2"	2'–1"	3'–1 1/16"	3'–0 3/8"	–	1/8	Opposite hand
9–S, Panel 10 and 9'–N, Panel 10'	4 3/16"	10	2 1/2"	2'–1"	3'–0 7/16"	2'–11 3/4"	1/8	–	As shown
9–S, Panel 9 and 9'–N, Panel 9'	4 15/16"	10	2 1/2"	2'–1"	3'–1 3/16"	3'–0 1/2"	–	1/8	Opposite hand
8–S, Panel 9	4 1/16"	10	2 1/2"	2'–1"	3'–0 5/16"	2'–11 5/8"	1/8	–	As shown
7–S, Panel 8 and 7'–N, Panel 8'	3 15/16"	8	3"	2'–0"	2'–11 3/16"	2'–10 1/2"	3/16	–	As shown
7–S, Panel 7 and 7'–N, Panel 7'	5 3/16"	8	3"	2'–0"	3'–0 7/16"	2'–11 3/4"	–	1/4	Opposite hand
6–S, Panel 7 and 6'–N, Panel 7'	4 1/4"	8	3"	2'–0"	2'–11 1/16"	2'–10 3/8"	1/4	–	As shown
6–S, Panel 6 and 6'–N, Panel 6'	5 1/4"	8	3"	2'–0"	3'–0 1/2"	2'–11 13/16"	–	5/16	Opposite hand

TOP GUSSET PLATE E						
LOCATION	Q	R	S	T	U	ORIENTATION
8–N, Panel 8 and 8'–S,Panel 8'	5 1/16"	3'–1 5/16"	3'–0 5/8"	3/16	——	As shown
8–N, Panel 9	4 1/16"	3'–0 5/16"	2'–11 5/8"	——	1/8	Opposite hand
10–N, Panel 10 and 10'–S, Panel 10'	4 13/16"	3'–1 1/16"	3'–0 3/8"	1/8	——	As shown
10–N, Panel 11	4 5/16"	3'–0 9/16"	2'–11 7/8"	——	——	Opposite hand
12–N, Panel 12 and 12–S, Panel 12'	4 9/16"	3'–0 13/16"	3'–0 1/8"	——	——	As shown
12–S, Panel 12 and 12–N, Panel 12'	4 9/16"	3'–0 13/16"	3'–0 1/8"	——	——	Opposite hand
10–S, Panel 11 and 10'–N, Panel 11'	4 5/16"	3'–0 9/16"	2'–11 7/8"	——	——	As shown
10–S, Panel 10 and 10'–N, Panel 10'	4 13/16"	3'–1 1/16"	3'–0 3/8"	1/8	——	Opposite hand
8–S, Panel 9	4 1/16"	3'–0 5/16"	2'–11 5/8"	——	1/8	As shown

Note:
Field drill holes in vertical leg of angles to match existing, except at Top Gusset Plates A and B.

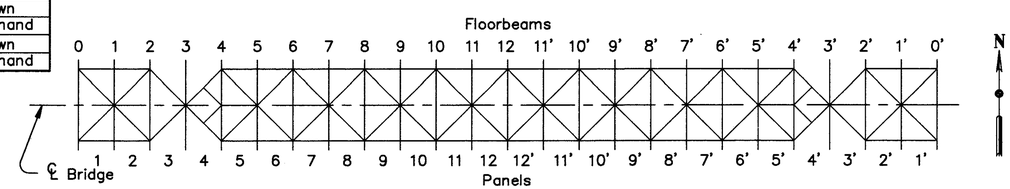

SCHEMATIC LOWER DECK FRAMING PLAN

COUNTY BRIDGE NO. 84

HOWARD NEEDLES TAMMEN & BERGENDOFF
ARCHITECTS ENGINEERS PLANNERS
HNTB

REPLACEMENT–LOWER DECK
GUSSET PLATES
BR. NO. CUY – 6 – 1499
REHABILITATION OF
VETERANS MEMORIAL BRIDGE
(U.S. 6, 20, 42 & S.R. 3 OVER CUYAHOGA RIVER)

CLEVELAND CUYAHOGA COUNTY OHIO

DRAWN J.O.L.	TRACED J.L.V.	CHECKED A.D.Y.	REVIEWED C.A.B.	REVISED
DATE 9/18/92	DATE 9/18/92	DATE 9/18/92	DATE 4/06/94	SHEET 178/270

\11646\STEEL\LD-GUSS3.DWG

FHWA REGION	STATE	PROJECT	
5	OHIO		

311/412

CUYAHOGA COUNTY
CUY – 6 – 14.99

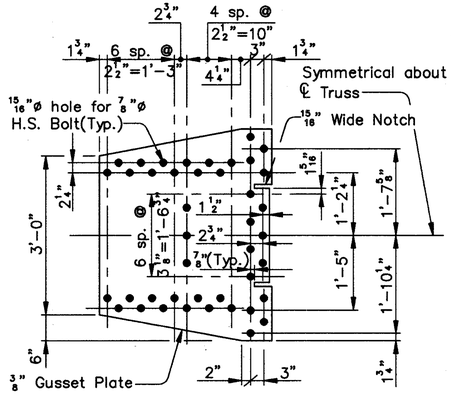

BOTTOM GUSSET PLATE A

LOCATION
5–N, Panel 5
5–N, Panel 6
5'–N, Panel 5'
5'–N, Panel 6'
5–S, Panel 5
5–S, Panel 6
5'–S, Panel 5'
5'–S, Panel 6'

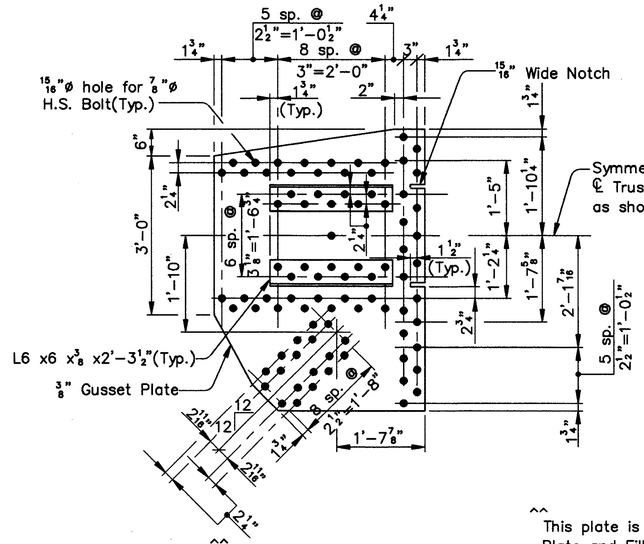

BOTTOM GUSSET PLATE B

LOCATION
6–N, Panel 6
6'–N, Panel 6'
6–S, Panel 6

This plate is supported by a Gusset Plate and Fill Plates that are attached to the Floorbeam. These Gusset and Fill Plates shall be temporarily removed and reused.

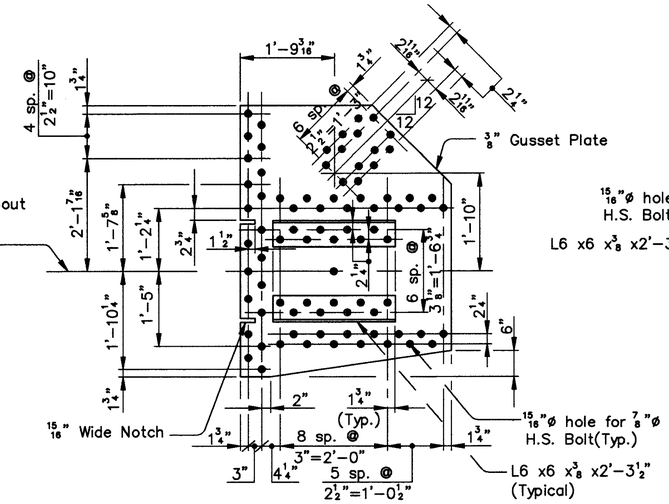

BOTTOM GUSSET PLATE C

LOCATION
6–S, Panel 7
6'–N, Panel 7'

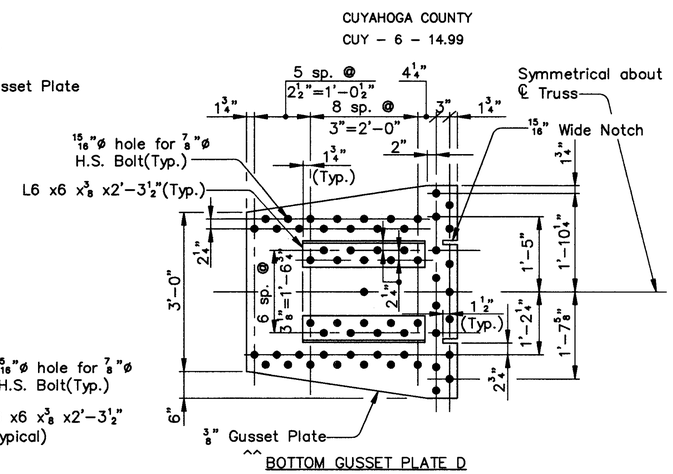

BOTTOM GUSSET PLATE D

LOCATION	
7–N, Panel 7	7–S, Panel 8
7'–N, Panel 8'	7'–S, Panel 8'
7'–N, Panel 7'	7'–S, Panel 7'
7–S, Panel 7	

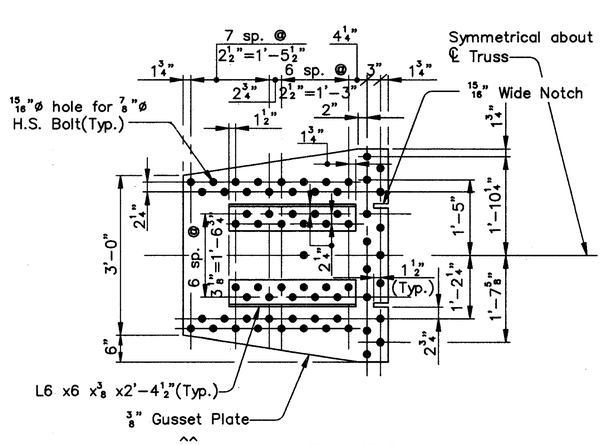

BOTTOM GUSSET PLATE E

LOCATION
9–N, Panel 9
9–N, Panel 10
9'–N, Panel 10'
9'–N, Panel 9'
9–S, Panel 9
9–S, Panel 10
9'–S, Panel 10'
9'–S, Panel 9'

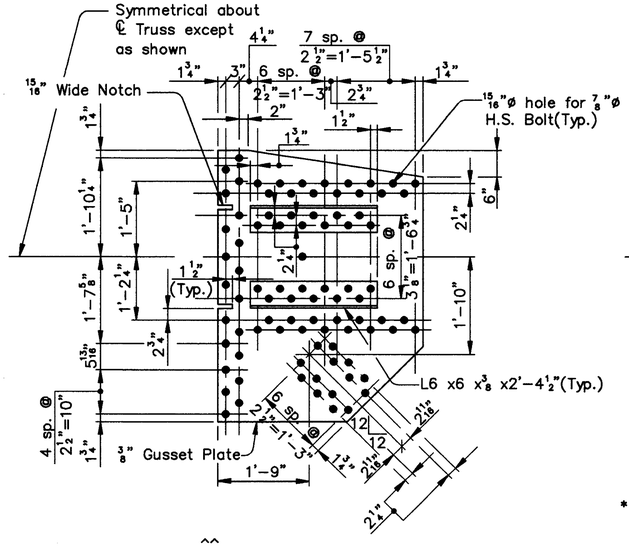

BOTTOM GUSSET PLATE F

LOCATION
8–N, Panel 9

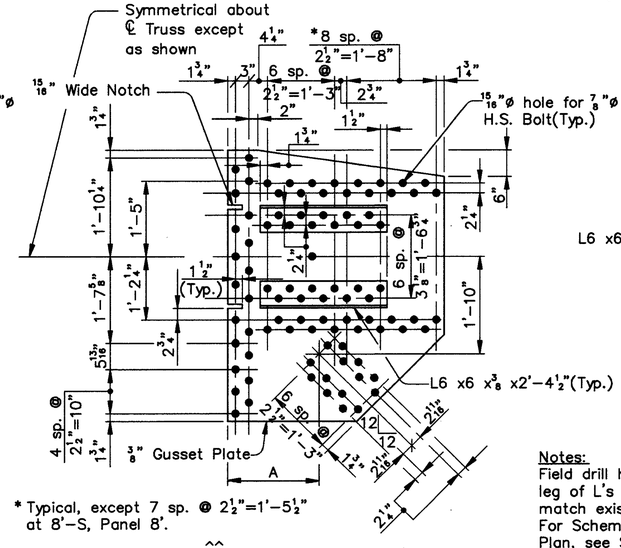

* Typical, except 7 sp. @ 2½"=1'-5½" at 8'–S, Panel 8'.

BOTTOM GUSSET PLATE G

LOCATION	A	LOCATION	A
12–N, Panel 12'	1'–8 7/16"	10'–S, Panel 11'	1'–8 11/16"
12–S, Panel 12	1'–8 7/16"	10'–N, Panel 10'	1'–8 3/16"
12–S, Panel 12'	1'–8 7/16"	10'–S, Panel 10'	1'–8 3/16"
10'–N, Panel 11'	1'–8 11/16"	8'–S, Panel 8'	1'–8"

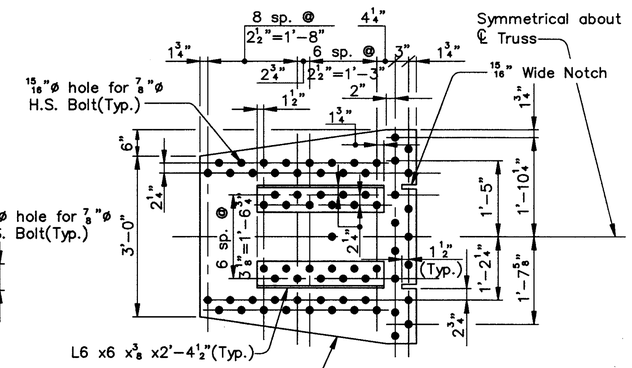

BOTTOM GUSSET PLATE H

LOCATION	
11–N, Panel 11	11–S, Panel 11
11–N, Panel 12	11–S, Panel 12
11'–N, Panel 11'	11'–S, Panel 11'
11'–N, Panel 12'	11'–S, Panel 12'

Notes:
Field drill holes in vertical leg of L's 6 x 6 x 3/8 to match existing.
For Schematic Lower Deck Plan, see Sheet 178 of 270.

COUNTY BRIDGE NO. 84

HOWARD NEEDLES TAMMEN & BERGENDOFF
ARCHITECTS ENGINEERS PLANNERS
HNTB

REPLACEMENT–LOWER DECK
GUSSET PLATES
BR. NO. CUY – 6 – 1499
REHABILITATION OF
VETERANS MEMORIAL BRIDGE
(U.S. 6, 20, 42 & S.R. 3 OVER CUYAHOGA RIVER)

CLEVELAND CUYAHOGA COUNTY OHIO

DRAWN J.O.L.	TRACED J.L.V.	CHECKED A.D.Y.	REVIEWED C.A.B.	REVISED
DATE 9/16/92	DATE 9/16/92	DATE 9/17/92	DATE 4/06/94	SHEET 179/270

\\1646\STEEL\LD-GUSS4.DWG

FHWA REGION	STATE	PROJECT	
5	OHIO		

312 / 412

CUYAHOGA COUNTY
CUY – 6 – 14.99

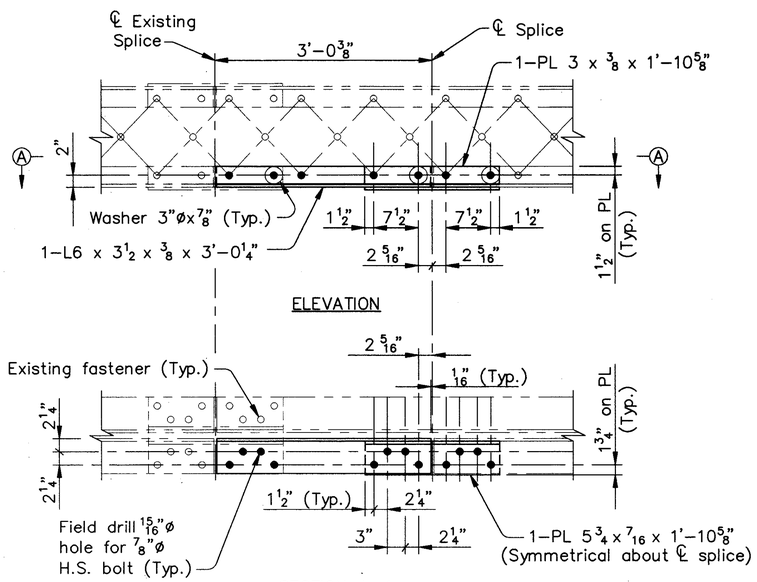

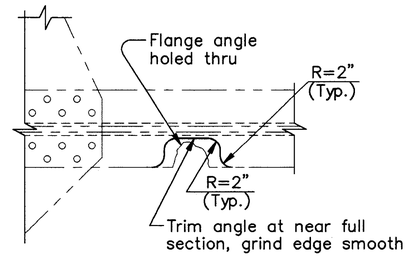

PLAN
(Existing condition)

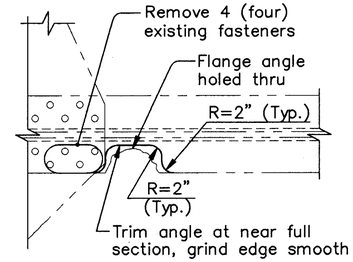

PLAN
(Existing condition)

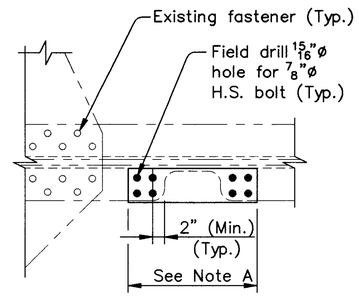

PLAN
(Repaired condition)

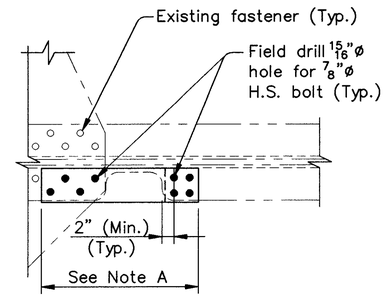

PLAN
(Repaired condition)

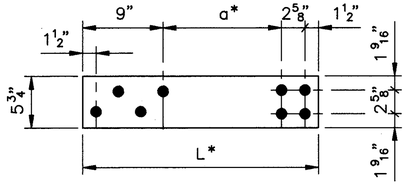

PLATE B DETAIL

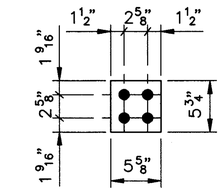

FILL PLATE B DETAIL

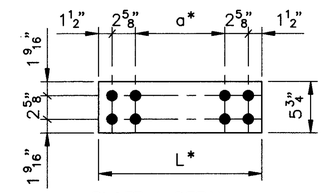

PLATE A DETAIL

TYPE "A" REPAIR

LOCATION	FLANGE	a*	L*
2–N, Panel 2	TOP	8"	1'–9 1/8"
4–S, Panel 4	TOP	18"	2'–7 1/8"
4–S, Panel 4	BOTTOM	10"	1'–11 1/8"

TYPE "B" REPAIR

LOCATION	FLANGE	a*	L*
2–S, Panel 2	TOP	11"	1'–7 1/4"
8–N, Panel 8	TOP	14"	1'–10 1/4"
10–S, Panel 10	TOP	11"	1'–7 1/4"
10–S, Panel 10	TOP	21"	2'–5 1/4"
10–N, Panel 11	TOP	16"	2'–0 1/4"
10–S, Panel 11	TOP	9"	1'–5 1/4"
10–S, Panel 11	TOP	5"	1'–1 1/4"
10'–N, Panel 11'	TOP	11"	1'–7 1/4"
8'–N, Panel 8'	TOP	19"	2'–3 1/4"
6'–N, Panel 6'	TOP	6"	1'–2 1/4"
4'–S, Panel 4'	TOP	11"	1'–7 1/4"

* – Contractor shall verify all dimensions in the field prior to fabricating the repair plates.

NOTE A:
Blast clean and apply prime coat to repair area limits prior to the placement of the new steel repair plate. (Include with Item 513 – Structural Steel (AISC Category I), as per plan for payment)

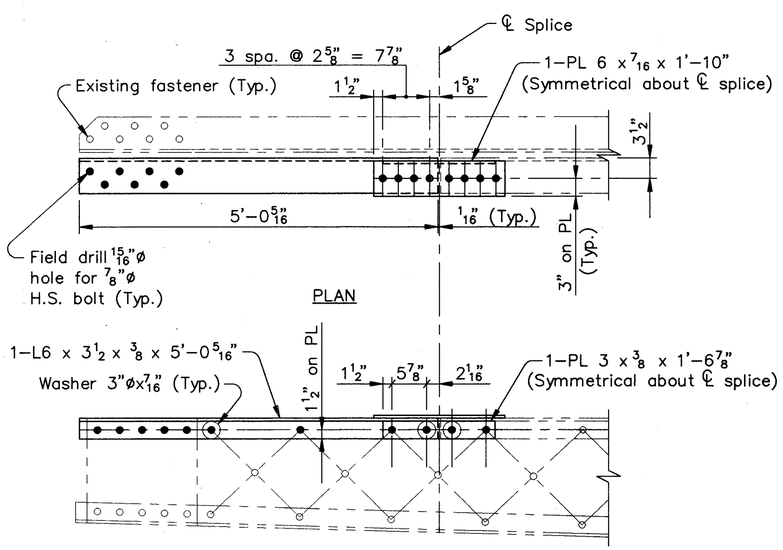

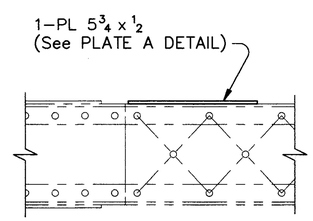

ELEVATION
(Repaired condition)
TYPE "A" REPAIR DETAIL

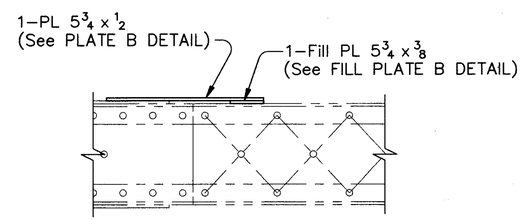

ELEVATION
(Repaired condition)
TYPE "B" REPAIR DETAIL

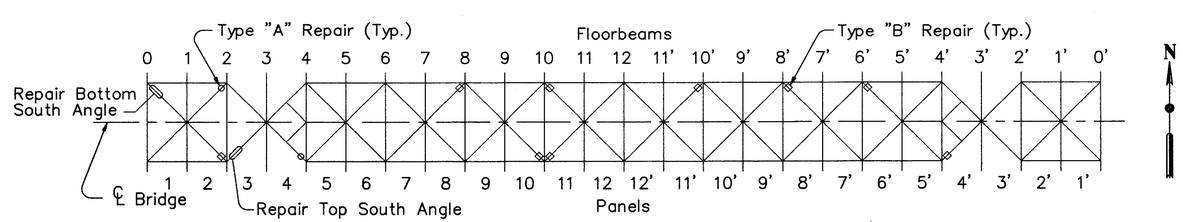

SCHEMATIC LOWER DECK FRAMING PLAN

COUNTY BRIDGE NO. 84

HOWARD NEEDLES TAMMEN & BERGENDOFF
ARCHITECTS ENGINEERS PLANNERS
HNTB

LOWER DECK LATERAL BRACING
REPAIR DETAILS
BR. NO. CUY – 6 – 1499
REHABILITATION OF
VETERANS MEMORIAL BRIDGE
(U.S. 6, 20, 42 & S.R. 3 OVER CUYAHOGA RIVER)
CLEVELAND CUYAHOGA COUNTY OHIO

DRAWN	TRACED	CHECKED	REVIEWED	REVISED
ADY	ADY	WDD	CAB	
DATE 05/04/94	DATE 05/04/94	DATE 05/19/94	DATE 05/31/94	SHEET 180/270

\11646\STEEL\LDLATREP

FHWA REGION	STATE	PROJECT	
5	OHIO		

313/412

CUYAHOGA COUNTY
CUY – 6 – 14.99

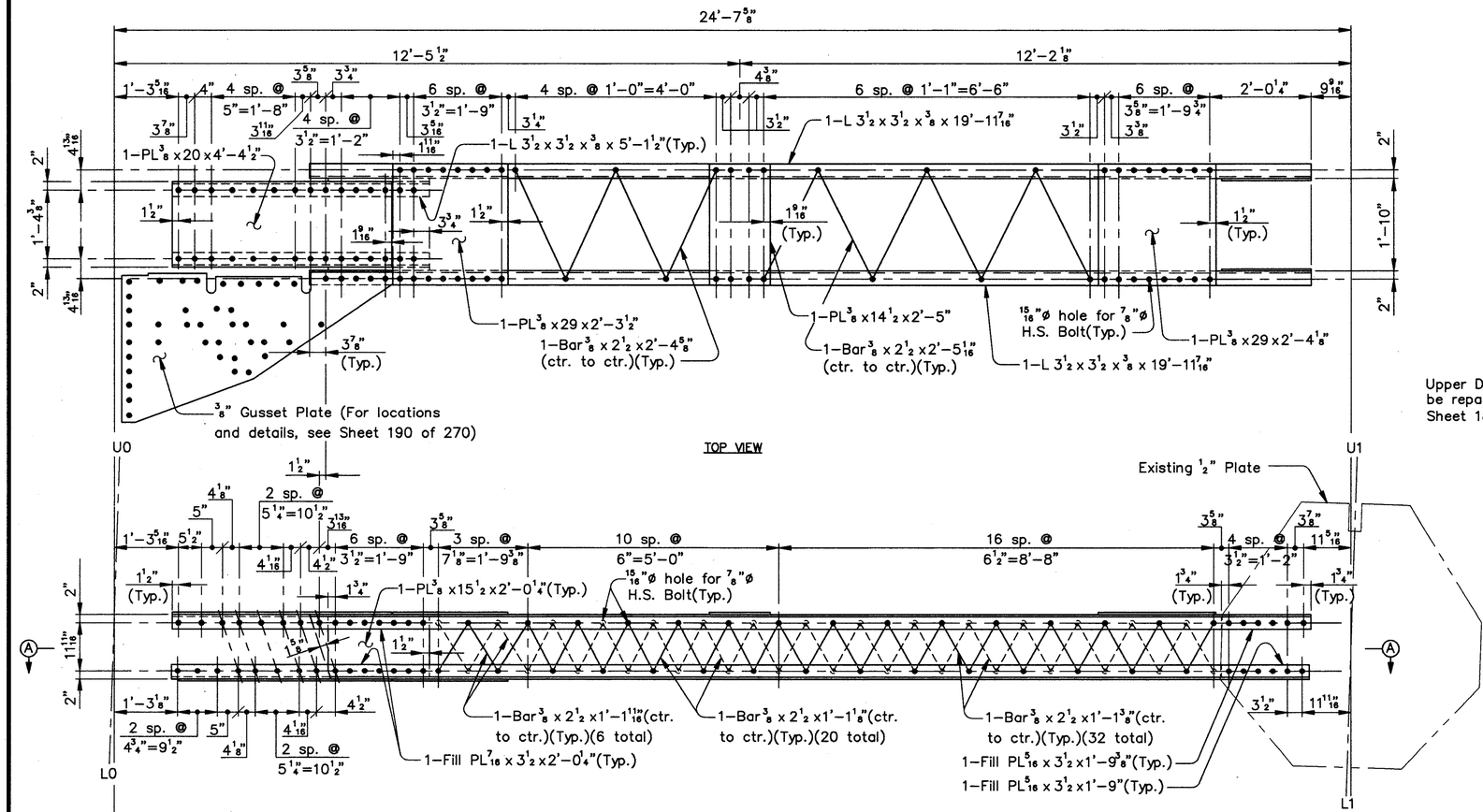

TOP VIEW

ELEVATION

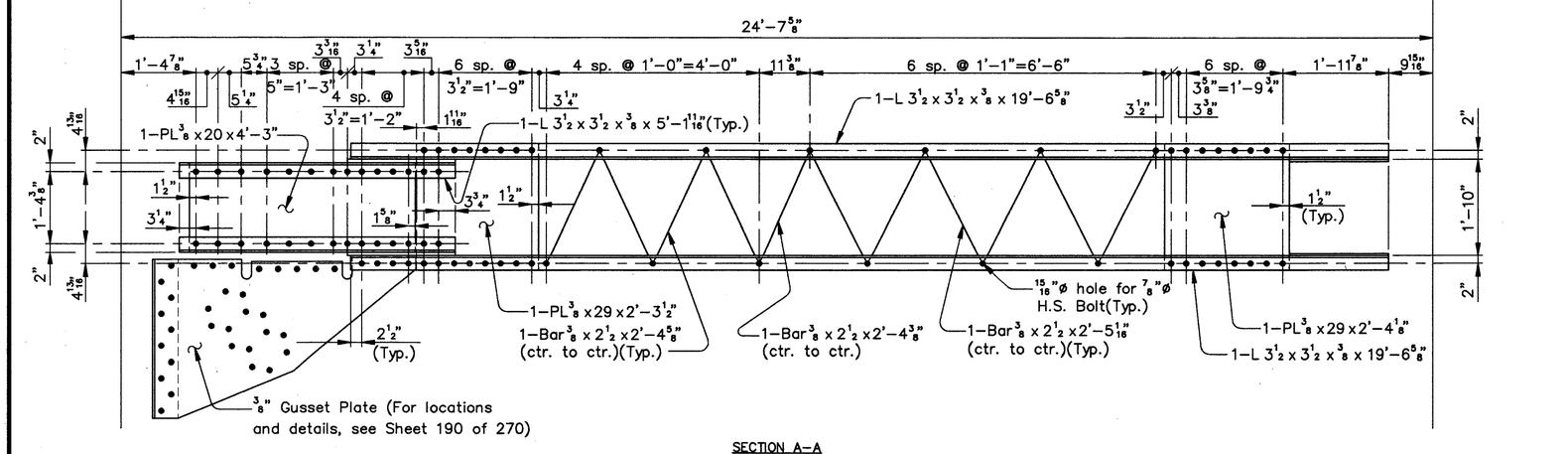

SECTION A–A

UPPER DECK STRUT A

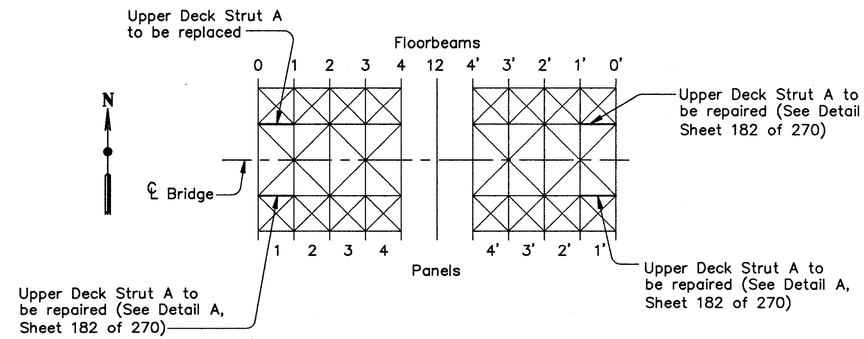

SCHEMATIC UPPER DECK FRAMING PLAN

Notes:
Upper Deck Strut A between Floorbeams 0 and 1 North shown.
Upper Deck Strut A between Floorbeams 0 and 1 South symmetrical about ℄ Bridge.
Upper Deck Strut A between Floorbeams 0' and 1' North symmetrical about Panel Point 12.
Upper Deck Strut A between Floorbeams 0' and 1' South symmetrical about Panel Point 12 ℄ Bridge.
FB denotes Floorbeam.

COUNTY BRIDGE NO. 84

HOWARD NEEDLES TAMMEN & BERGENDOFF
ARCHITECTS ENGINEERS PLANNERS
HNTB

REPLACEMENT–UPPER DECK STRUT
BR. NO. CUY – 6 – 1499
REHABILITATION OF
VETERANS MEMORIAL BRIDGE
(U.S. 6, 20, 42 & S.R. 3 OVER CUYAHOGA RIVER)
CLEVELAND CUYAHOGA COUNTY OHIO

DRAWN	TRACED	CHECKED	REVIEWED	REVISED
J.L.V.	J.L.V.	A.D.Y.	C.A.B.	
DATE 11/18/92	DATE 11/18/92	DATE 2/05/94	DATE 4/06/94	SHEET 181/270

\11646\STEEL\UDSO-1A.DWG

FHWA REGION	STATE	PROJECT	
5	OHIO		

314 / 412

CUYAHOGA COUNTY
CUY – 6 – 14.99

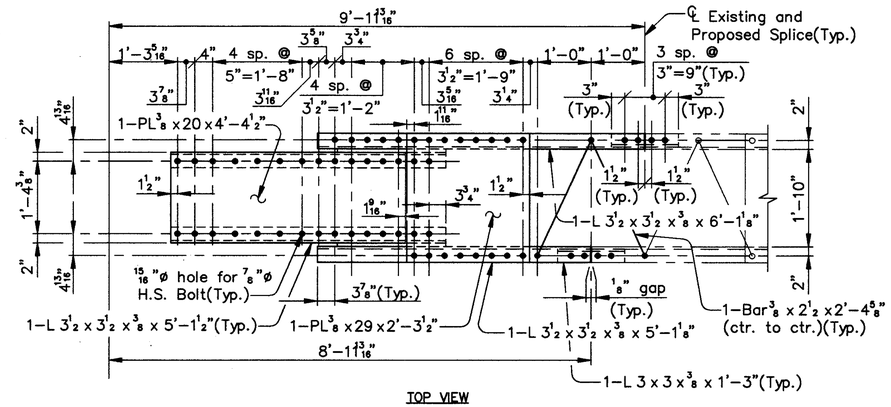

TOP VIEW

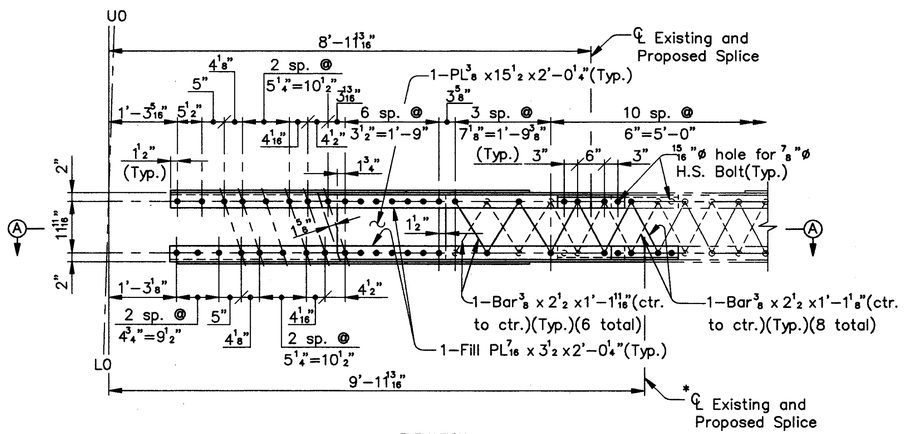

ELEVATION

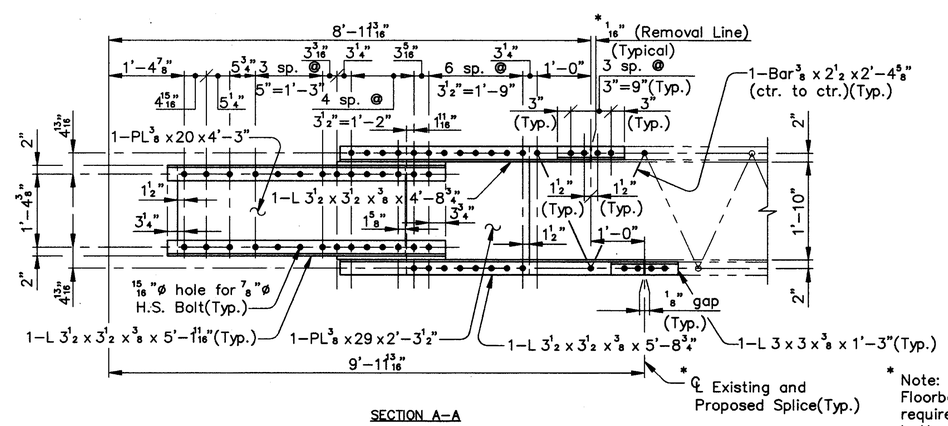

SECTION A–A

DETAIL A
(For additional details , see Sheet 181 of 270)

* Note: Upper Deck Strut A between Floorbeams 0 and 1 South will require the Contractor to field cut bottom angles at removal line and field drill 15/16"Ø holes in existing bottom angles to match holes in splice L 3 x 3 x 3/8 .

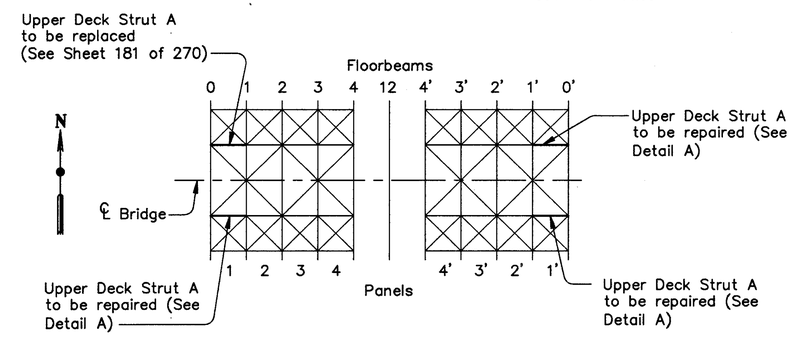

SCHEMATIC UPPER DECK FRAMING PLAN

Notes:
Upper Deck Strut A between Floorbeams 0 and 1 South shown.
Upper Deck Strut A between Floorbeams 0 and 1 North symmetrical about ℄ Bridge.
Upper Deck Strut A between Floorbeams 0' and 1' South symmetrical about Panel Point 12.
Upper Deck Strut A between Floorbeams 0' and 1' North symmetrical about Panel Point 12 ℄ Bridge.
FB denotes Floorbeam.

COUNTY BRIDGE NO. 84

HOWARD NEEDLES TAMMEN & BERGENDOFF
ARCHITECTS ENGINEERS PLANNERS
HNTB

REPLACEMENT–UPPER DECK STRUT
BR. NO. CUY – 6 – 1499
REHABILITATION OF
VETERANS MEMORIAL BRIDGE
(U.S. 6, 20, 42 & S.R. 3 OVER CUYAHOGA RIVER)
CLEVELAND CUYAHOGA COUNTY OHIO

DRAWN J.L.V.	TRACED J.L.V.	CHECKED A.D.Y.	REVIEWED C.A.B.	REVISED
DATE 11/19/92	DATE 11/19/92	DATE 2/05/94	DATE 4/06/94	SHEET 182/270

\11646\STEEL\UDS0-1B.DWG

FHWA REGION	STATE	PROJECT	
5	OHIO		

315/412

CUYAHOGA COUNTY
CUY – 6 – 14.99

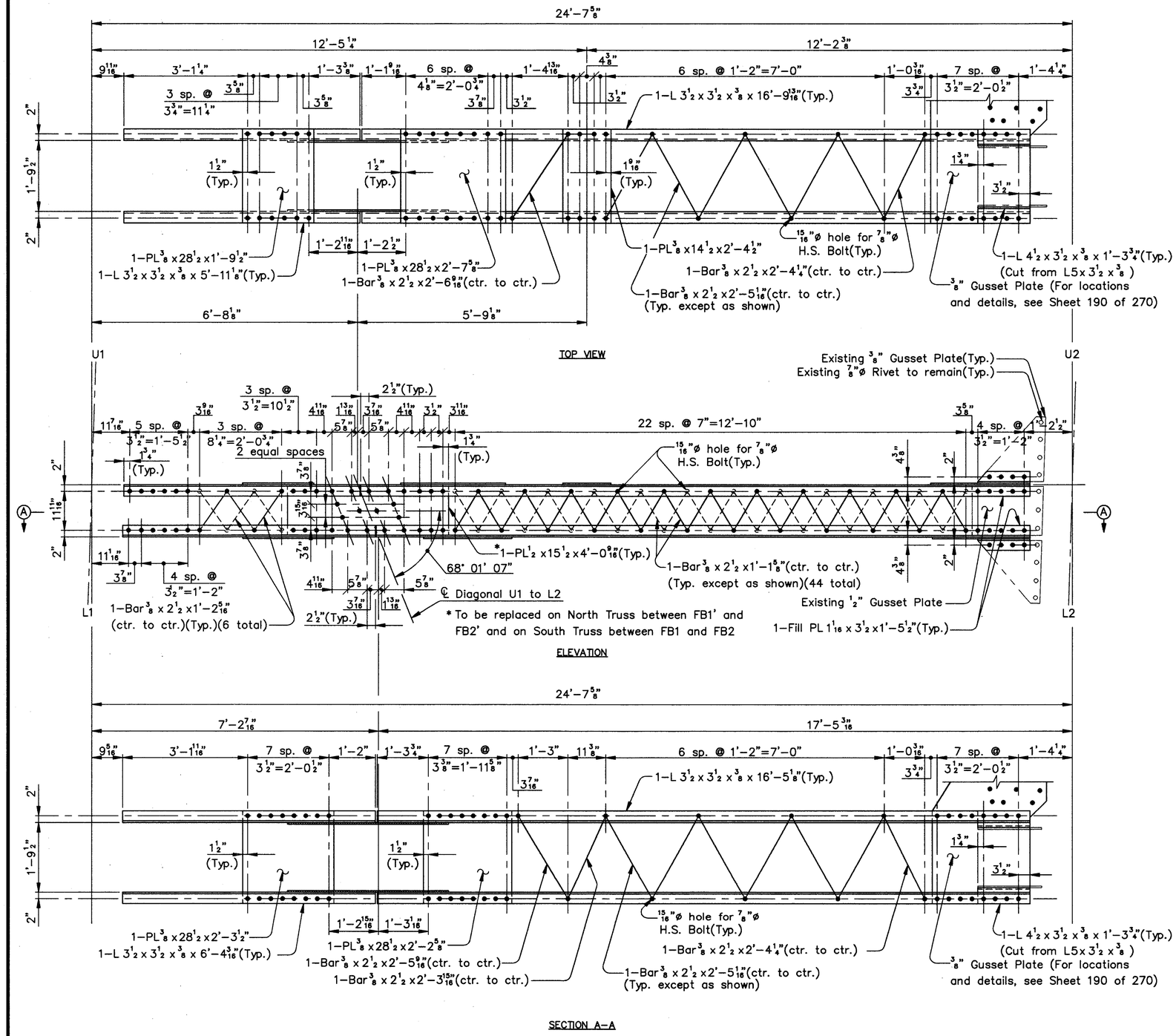

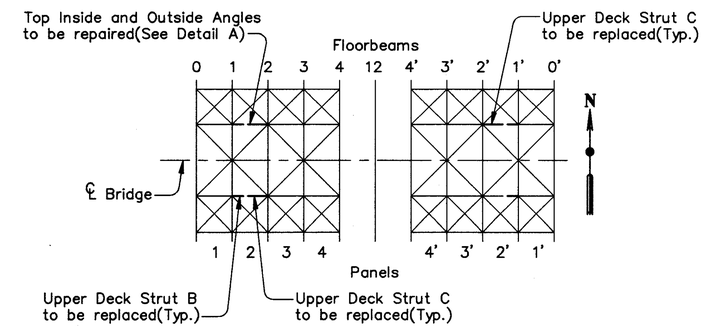

SCHEMATIC UPPER DECK FRAMING PLAN

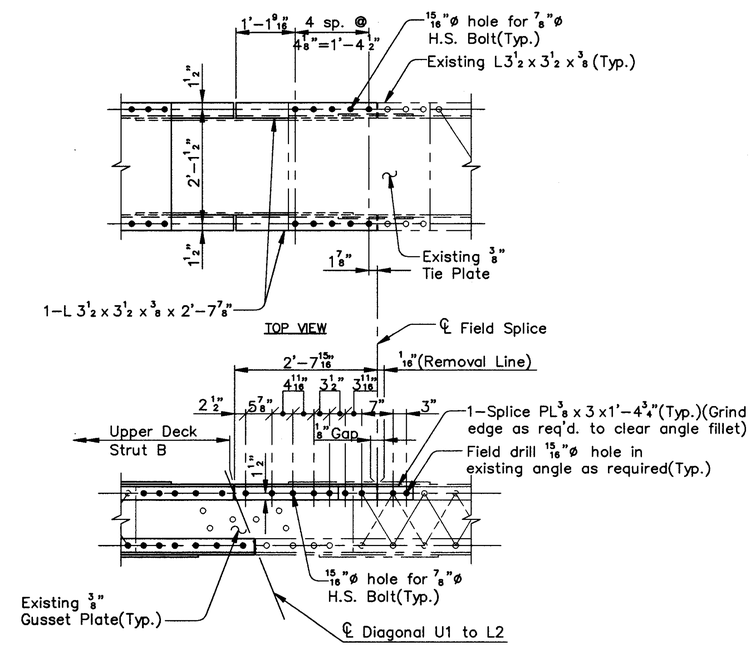

DETAIL A

Notes:
Upper Deck Struts B and C between Floorbeams 1 and 2 South shown.
Upper Deck Struts B and C between Floorbeams 1 and 2 North symmetrical about ℄ Bridge.
Upper Deck Struts B and C between Floorbeams 1' and 2' South symmetrical about Panel Point 12.
Upper Deck Struts B and C between Floorbeams 1' and 2' North symmetrical about Panel Point 12 ℄ Bridge.
FB denotes Floorbeam.

COUNTY BRIDGE NO. 84

HOWARD NEEDLES TAMMEN & BERGENDOFF
ARCHITECTS ENGINEERS PLANNERS
HNTB

REPLACEMENT–UPPER DECK STRUT
BR. NO. CUY – 6 – 1499
REHABILITATION OF
VETERANS MEMORIAL BRIDGE
(U.S. 6, 20, 42 & S.R. 3 OVER CUYAHOGA RIVER)
CLEVELAND CUYAHOGA COUNTY OHIO

DRAWN J.L.V.	TRACED J.L.V.	CHECKED A.D.Y.	REVIEWED C.A.B.	REVISED
DATE 10/22/92	DATE 10/22/92	DATE 11/10/92	DATE 4/06/94	SHEET 183/270

\11646\STEEL\UDS1-2.DWG

FHWA REGION	STATE	PROJECT	
5	OHIO		

316/412

CUYAHOGA COUNTY
CUY – 6 – 14.99

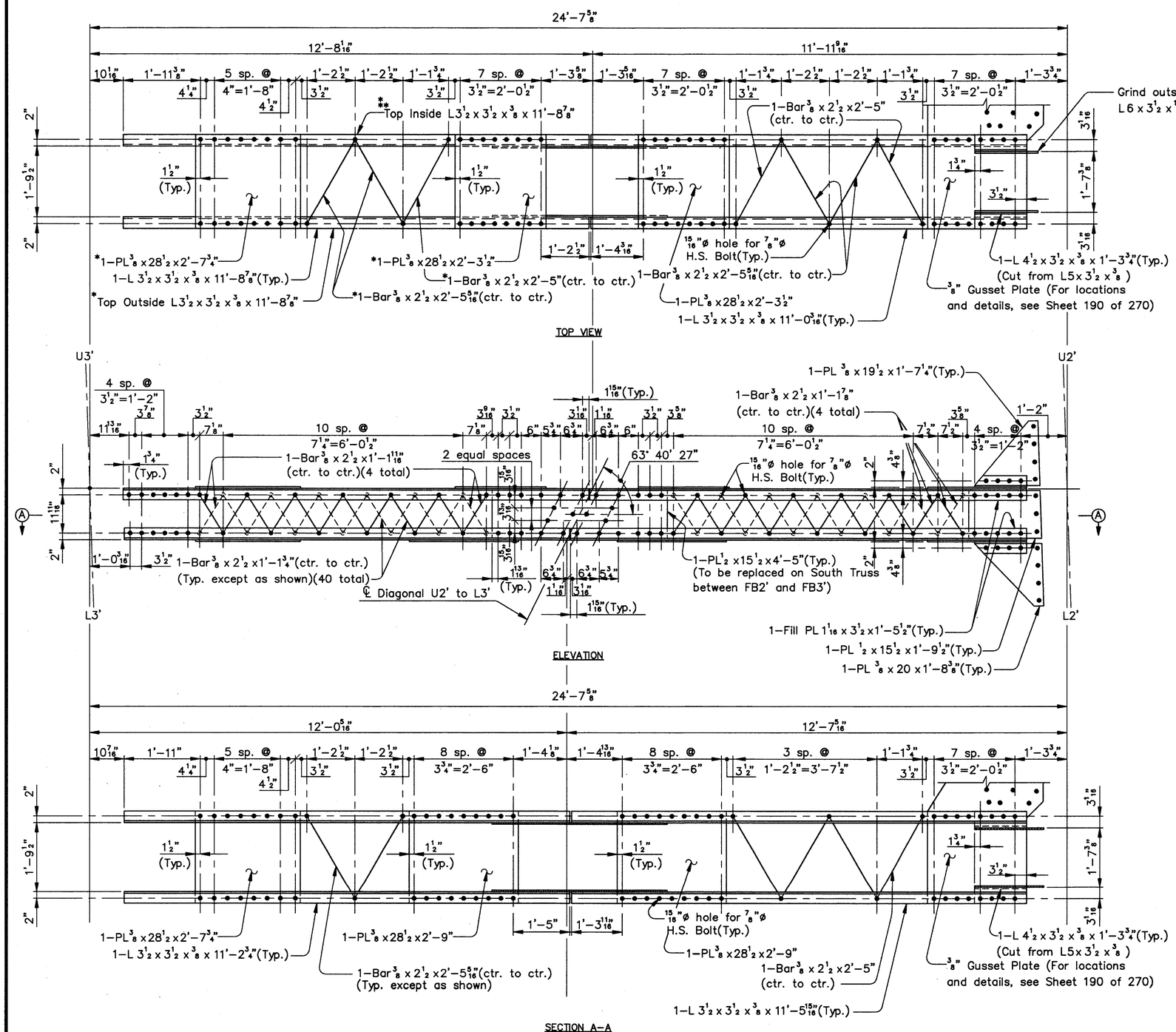

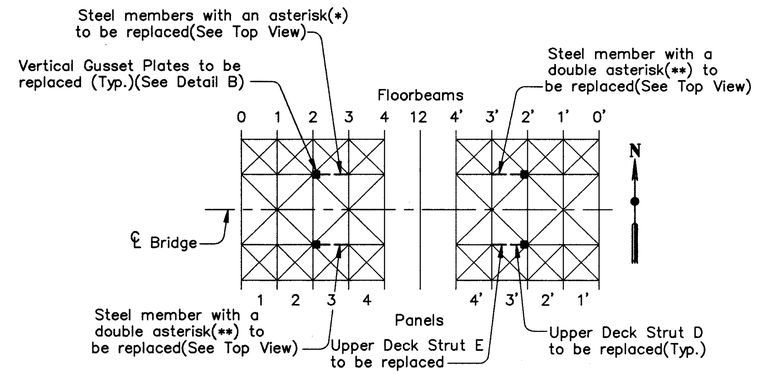

SCHEMATIC UPPER DECK FRAMING PLAN

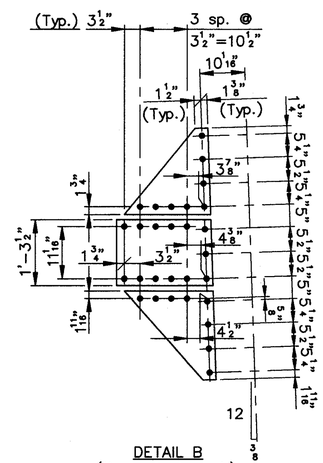

DETAIL B
(8 required–each)

Notes:
Upper Deck Struts D and E between Floorbeams 2' and 3' South shown.
Upper Deck Struts D and E between Floorbeams 2' and 3' North symmetrical about ℄ Bridge.
Upper Deck Struts D and E between Floorbeams 2 and 3 South symmetrical about Panel Point 12.
Upper Deck Struts D and E between Floorbeams 2 and 3 North symmetrical about Panel Point 12 ℄ Bridge.
FB denotes Floorbeam.

COUNTY BRIDGE NO. 84

HOWARD NEEDLES TAMMEN & BERGENDOFF
ARCHITECTS ENGINEERS PLANNERS
HNTB

REPLACEMENT–UPPER DECK STRUT
BR. NO. CUY – 6 – 1499
REHABILITATION OF
VETERANS MEMORIAL BRIDGE
(U.S. 6, 20, 42 & S.R. 3 OVER CUYAHOGA RIVER)
CLEVELAND CUYAHOGA COUNTY OHIO

DRAWN J.L.V.	TRACED J.L.V.	CHECKED A.D.Y.	REVIEWED C.A.B.	REVISED
DATE 10/22/92	DATE 10/22/92	DATE 11/10/92	DATE 4/06/94	SHEET 184/270

\11646\STEEL\UDS2–3.DWG

FHWA REGION	STATE	PROJECT	
5	OHIO		

317/412

CUYAHOGA COUNTY
CUY – 6 – 14.99

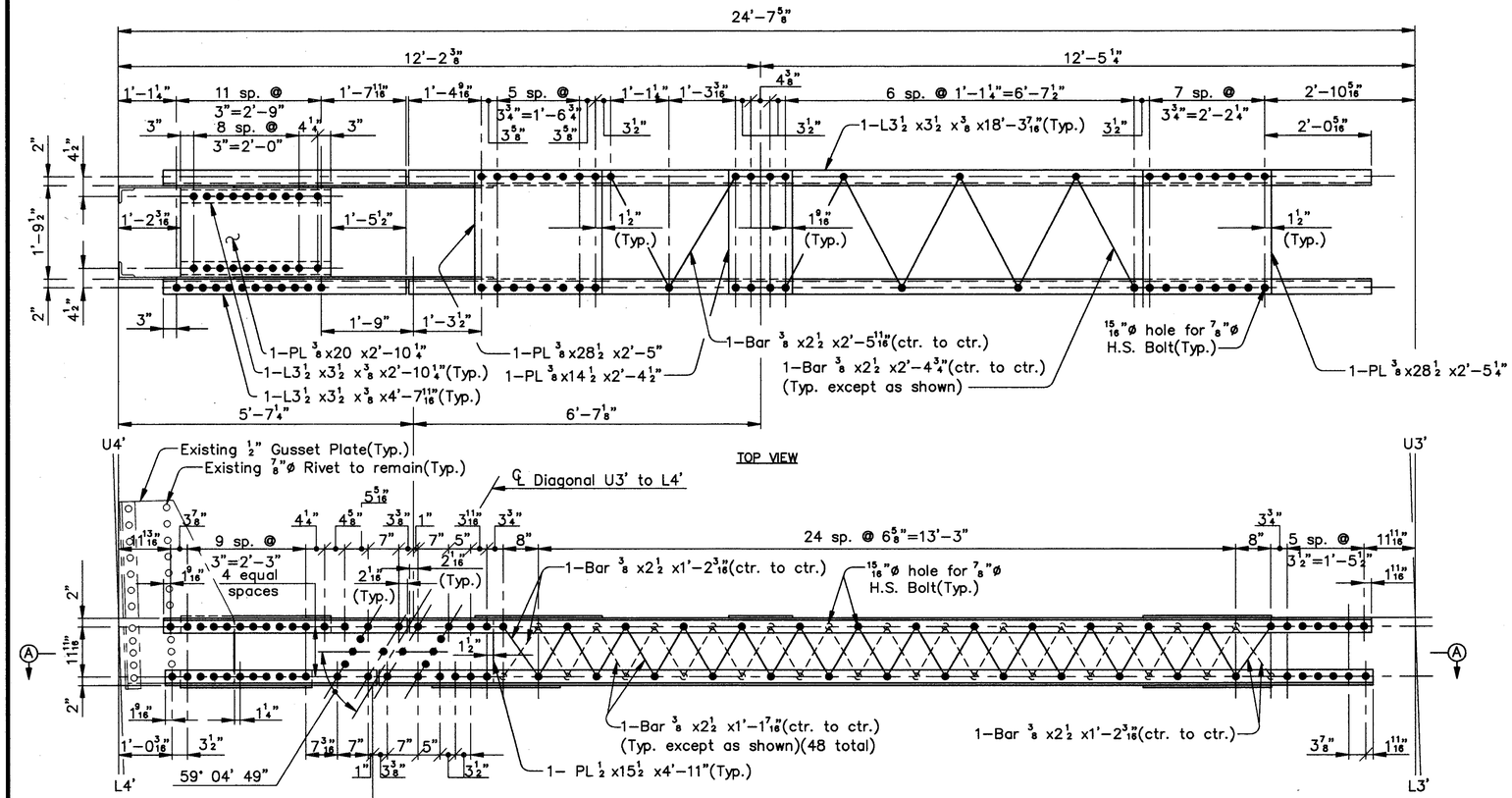

TOP VIEW

ELEVATION

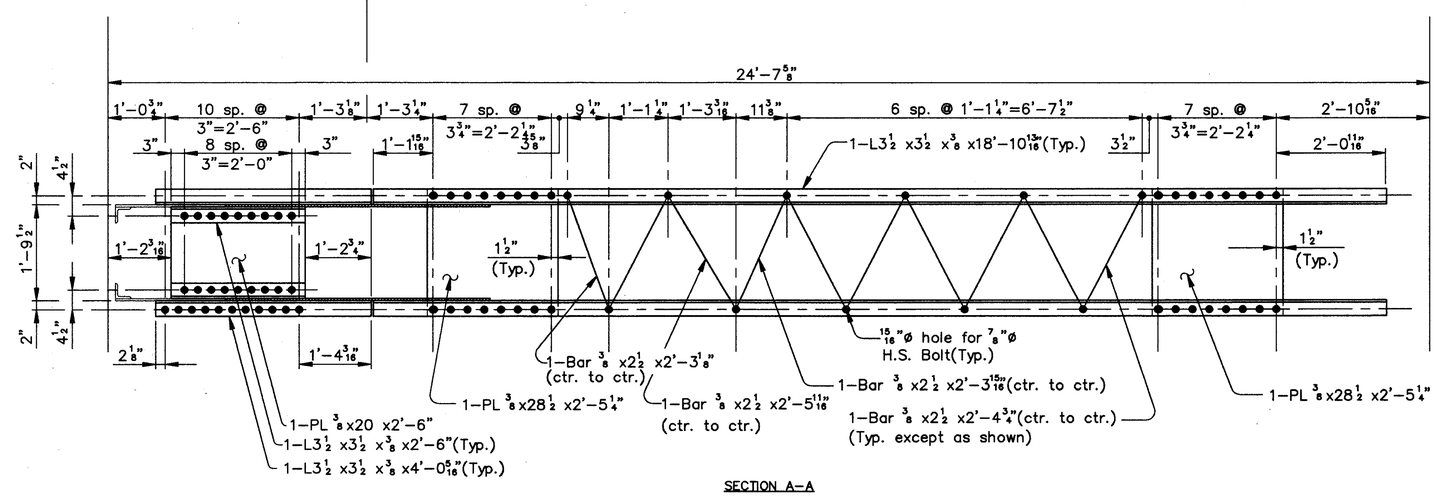

SECTION A–A

UPPER DECK STRUT G

UPPER DECK STRUT F

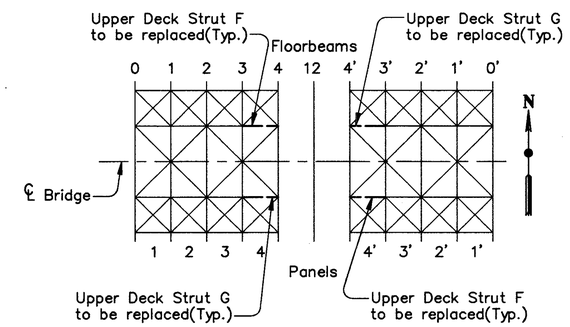

SCHEMATIC UPPER DECK FRAMING PLAN

Notes:
Upper Deck Struts F and G between Floorbeams 3' and 4' South shown.
Upper Deck Struts F and G between Floorbeams 3' and 4' North symmetrical about ℄ Bridge.
Upper Deck Struts F and G between Floorbeams 3 and 4 South symmetrical about Panel Point 12.
Upper Deck Struts F and G between Floorbeams 3 and 4 North symmetrical about Panel Point 12 and ℄ Bridge.

COUNTY BRIDGE NO. 84

HOWARD NEEDLES TAMMEN & BERGENDOFF
ARCHITECTS ENGINEERS PLANNERS
HNTB

REPLACEMENT–UPPER DECK STRUTS
BR. NO. CUY – 6 – 1499
REHABILITATION OF
VETERANS MEMORIAL BRIDGE
(U.S. 6, 20, 42 & S.R. 3 OVER CUYAHOGA RIVER)
CLEVELAND CUYAHOGA COUNTY OHIO

DRAWN C.K.B./J.L.V.	TRACED J.L.V.	CHECKED A.D.Y.	REVIEWED C.A.B.	REVISED
DATE 7/27/92	DATE 7/27/92	DATE 11/09/92	DATE 4/06/94	SHEET 185/270

\11646\STEEL\UDS3-4.DWG

318

FHWA REGION	STATE	PROJECT	
5	OHIO		

318/412

CUYAHOGA COUNTY
CUY – 6 – 14.99

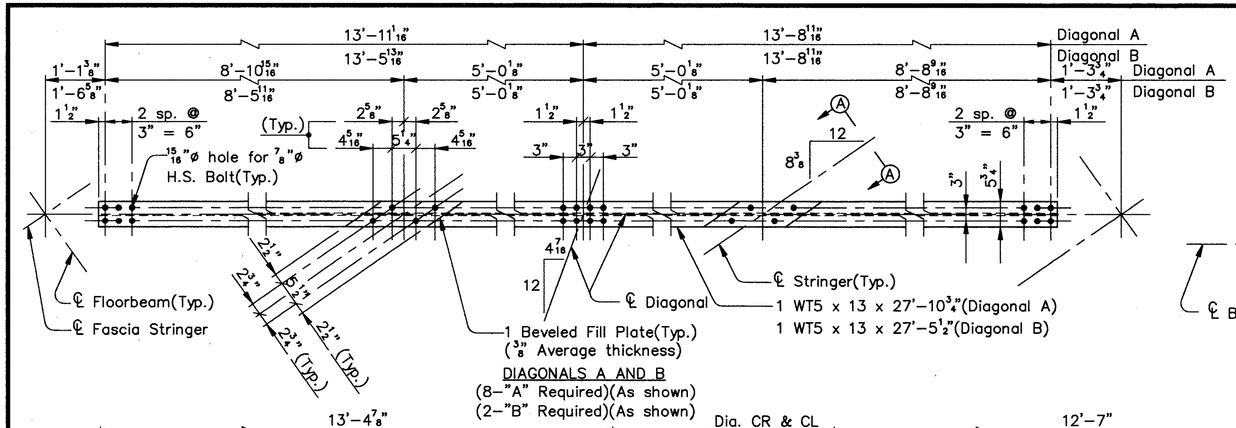

DIAGONALS A AND B
(8–"A" Required)(As shown)
(2–"B" Required)(As shown)

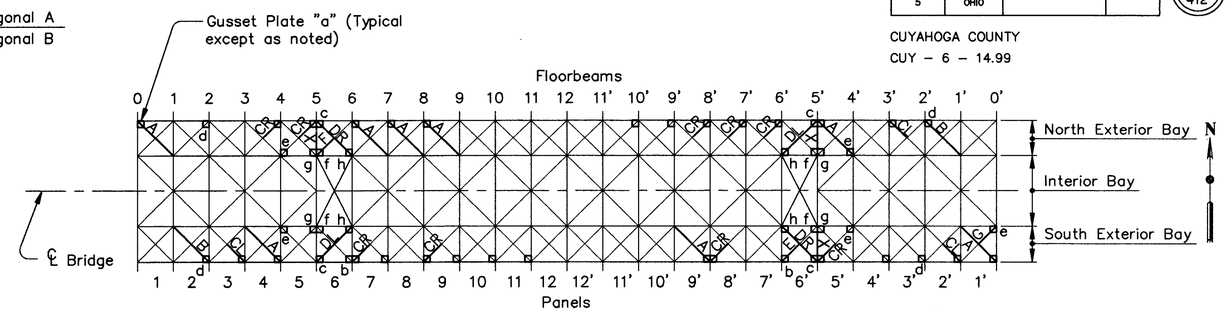

SCHEMATIC UPPER DECK FRAMING PLAN

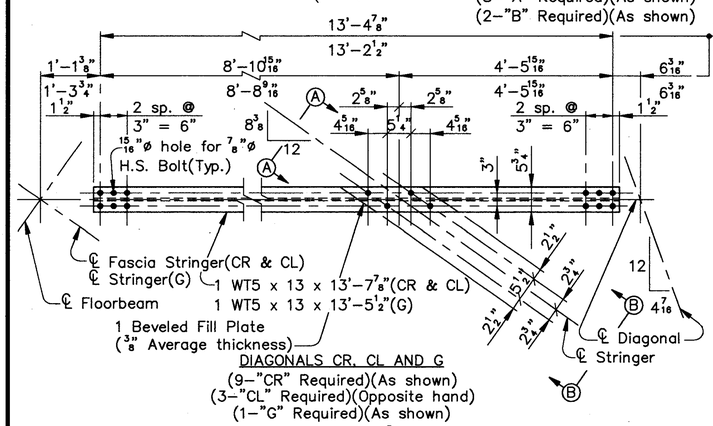

DIAGONALS CR, CL AND G
(9–"CR" Required)(As shown)
(3–"CL" Required)(Opposite hand)
(1–"G" Required)(As shown)

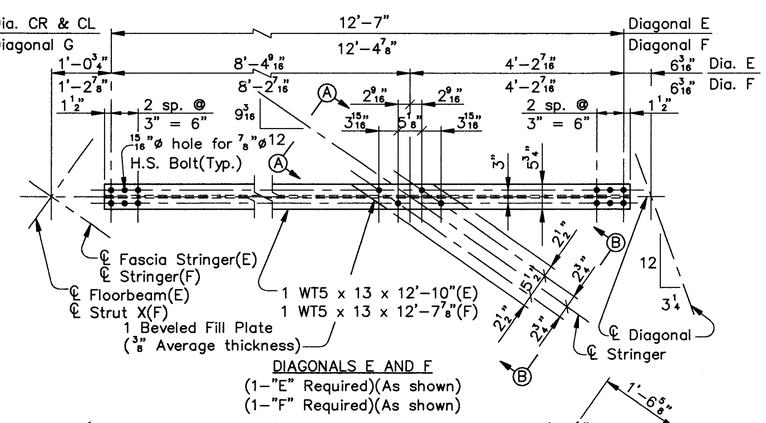

DIAGONALS E AND F
(1–"E" Required)(As shown)
(1–"F" Required)(As shown)

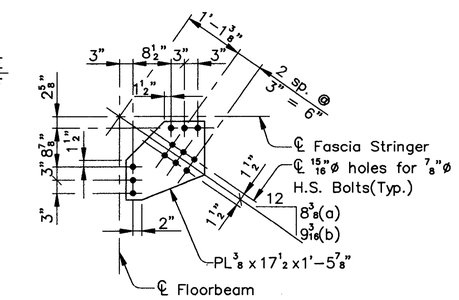

GUSSET PLATES "a" and "b"
(27–"a" Required)
(2–"b" Required)

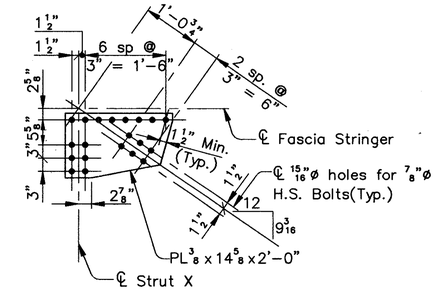

GUSSET PLATE "c"
(4 Required)

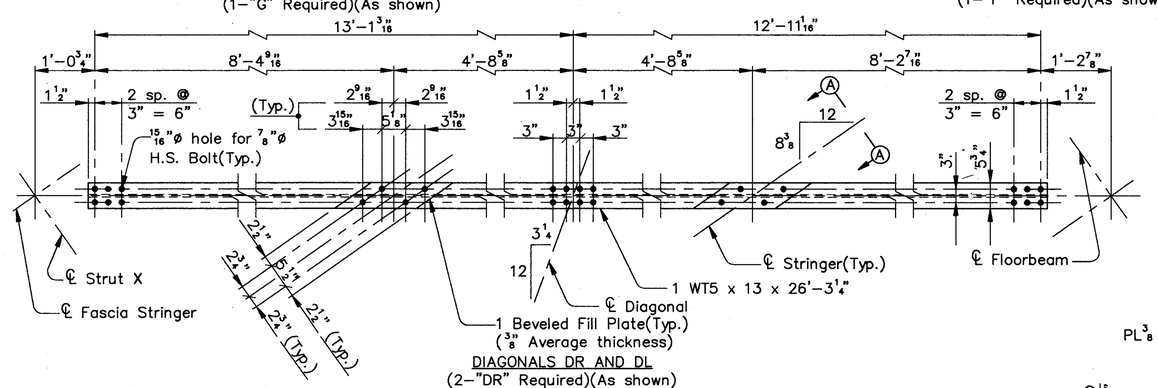

DIAGONALS DR AND DL
(2–"DR" Required)(As shown)
(2–"DL" Required)(Opposite hand)

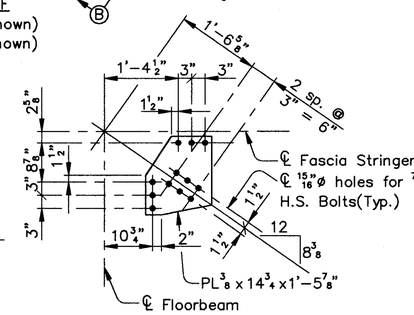

GUSSET PLATE "d"
(4 Required)

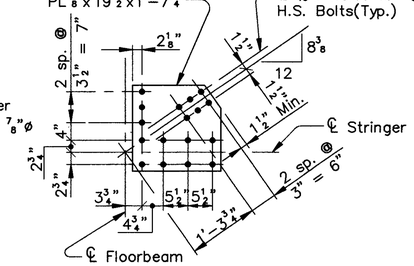

GUSSET PLATE "e"
(5 Required)

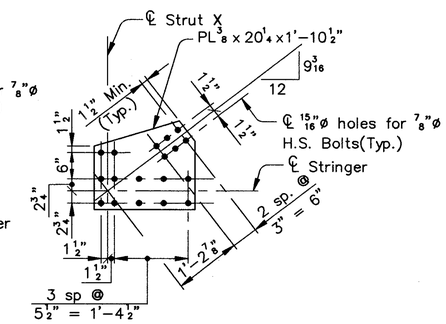

GUSSET PLATE "f"
(4 Required)

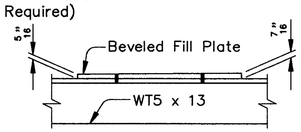

SECTION A–A
SECTION B–B

Note:
Section B–B typical at Dia. F and G only.

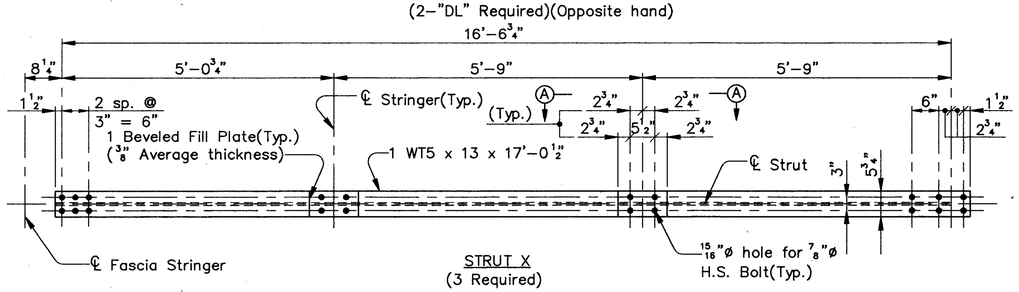

STRUT X
(3 Required)

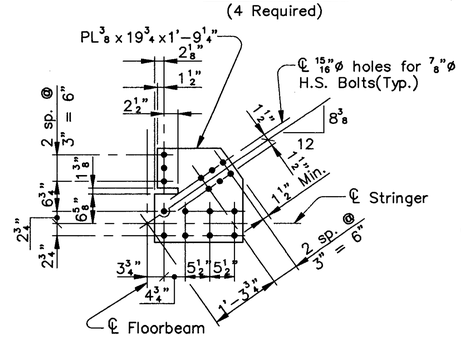

GUSSET PLATE "g"
(4 Required)

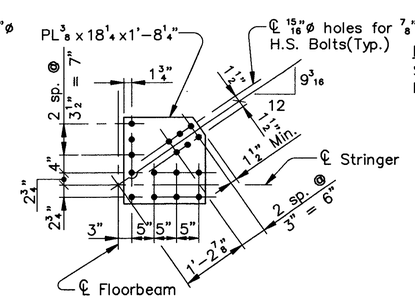

GUSSET PLATE "h"
(4 Required)

COUNTY BRIDGE NO. 84

HOWARD NEEDLES TAMMEN & BERGENDOFF
ARCHITECTS ENGINEERS PLANNERS
HNTB

REPLACEMENT–UPPER DECK
LATERAL BRACING
BR. NO. CUY – 6 – 1499
REHABILITATION OF
VETERANS MEMORIAL BRIDGE
(U.S. 6, 20, 42 & S.R. 3 OVER CUYAHOGA RIVER)

CLEVELAND CUYAHOGA COUNTY OHIO

DRAWN	TRACED	CHECKED	REVIEWED	REVISED
J.L.V.	J.L.V.	C.K.B.	C.A.B.	
DATE 8/24/92	DATE 8/24/92	DATE 8/28/92	DATE 04/06/94	SHEET 186/270

\11646\STEEL\UDLAT1

FHWA REGION	STATE	PROJECT	
5	OHIO		

319
412

CUYAHOGA COUNTY
CUY – 6 – 14.99

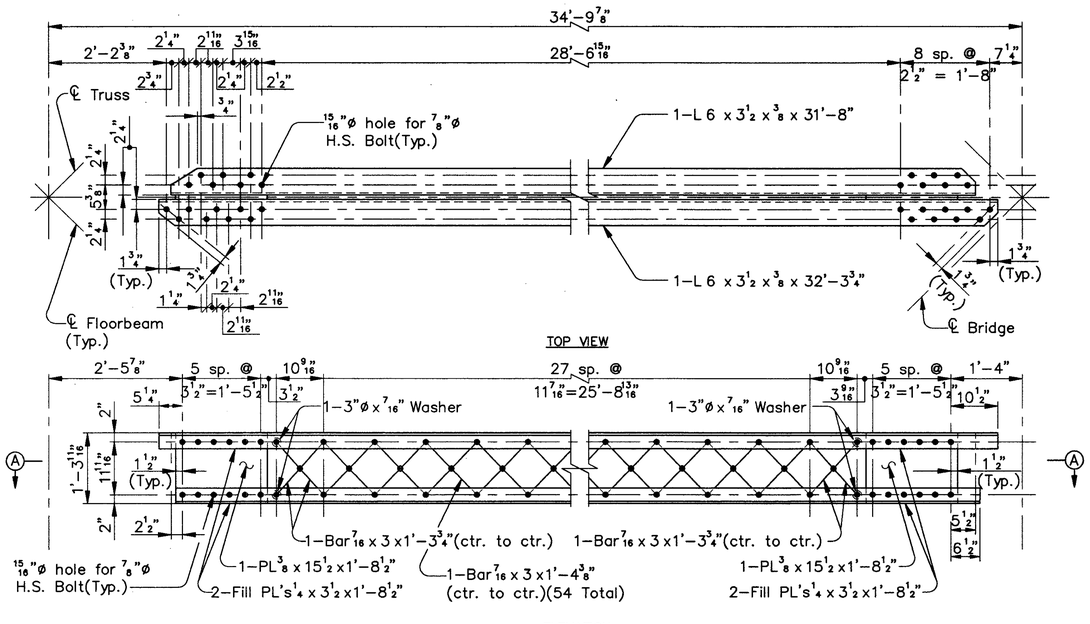

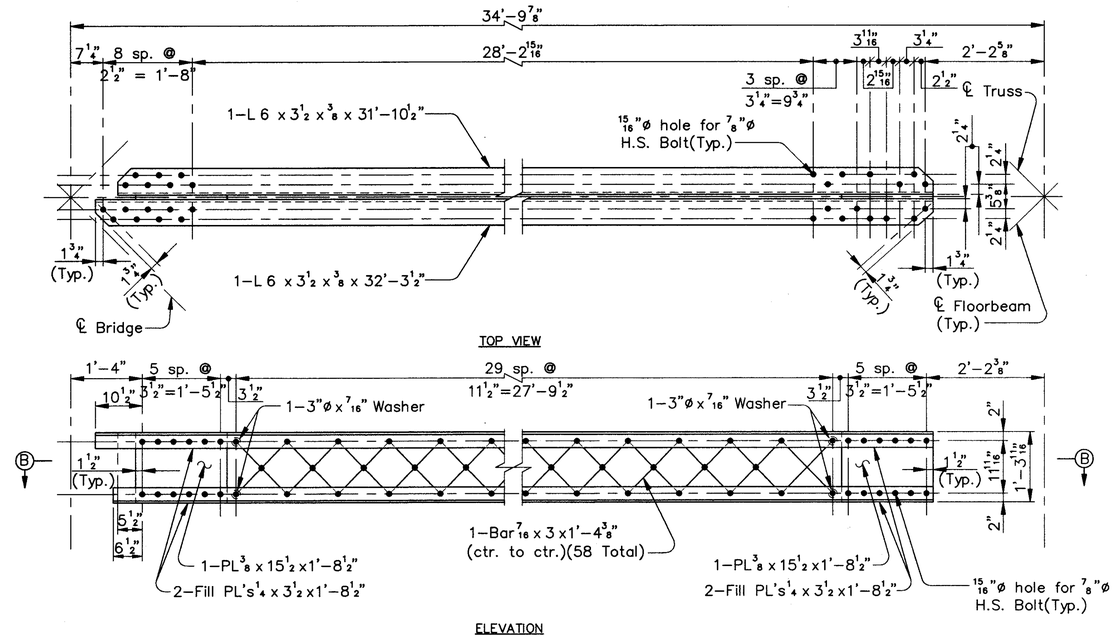

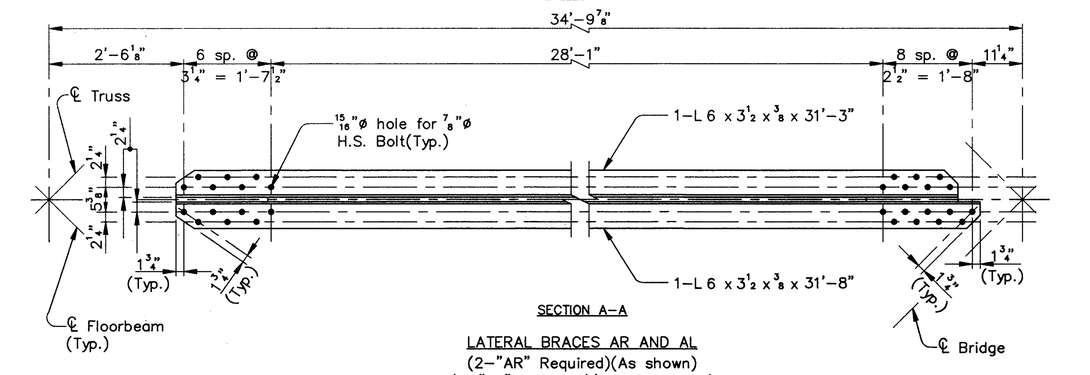

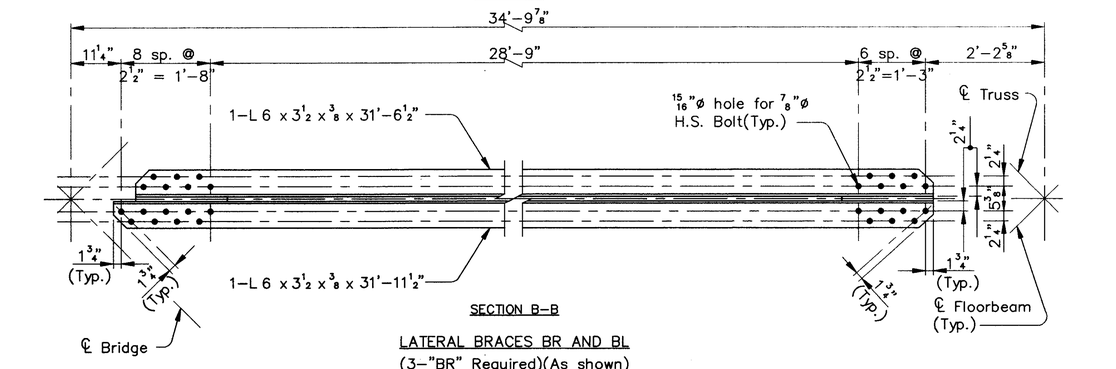

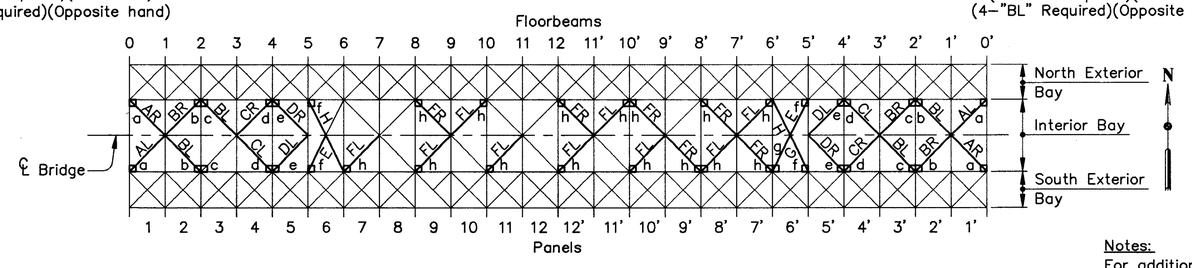

SCHEMATIC UPPER DECK FRAMING PLAN

Notes:
For additional Upper Deck Lateral Bracing and Gusset Plate details, see sheets 188 thru 190 of 270.

COUNTY BRIDGE NO. 84

HOWARD NEEDLES TAMMEN & BERGENDOFF
ARCHITECTS ENGINEERS PLANNERS
HNTB

REPLACEMENT–UPPER DECK
LATERAL BRACING
BR. NO. CUY – 6 – 1499
REHABILITATION OF
VETERANS MEMORIAL BRIDGE
(U.S. 6, 20, 42 & S.R. 3 OVER CUYAHOGA RIVER)
CLEVELAND CUYAHOGA COUNTY OHIO

DRAWN	TRACED	CHECKED	REVIEWED	REVISED
J.L.V.	J.L.V.	C.K.B.	C.A.B.	
DATE 8/24/92	DATE 8/24/92	DATE 9/03/92	DATE 04/06/94	SHEET 187/270

\11646\STEEL\UDLAT2

FHWA REGION	STATE	PROJECT	
5	OHIO		

320
412

CUYAHOGA COUNTY
CUY – 6 – 14.99

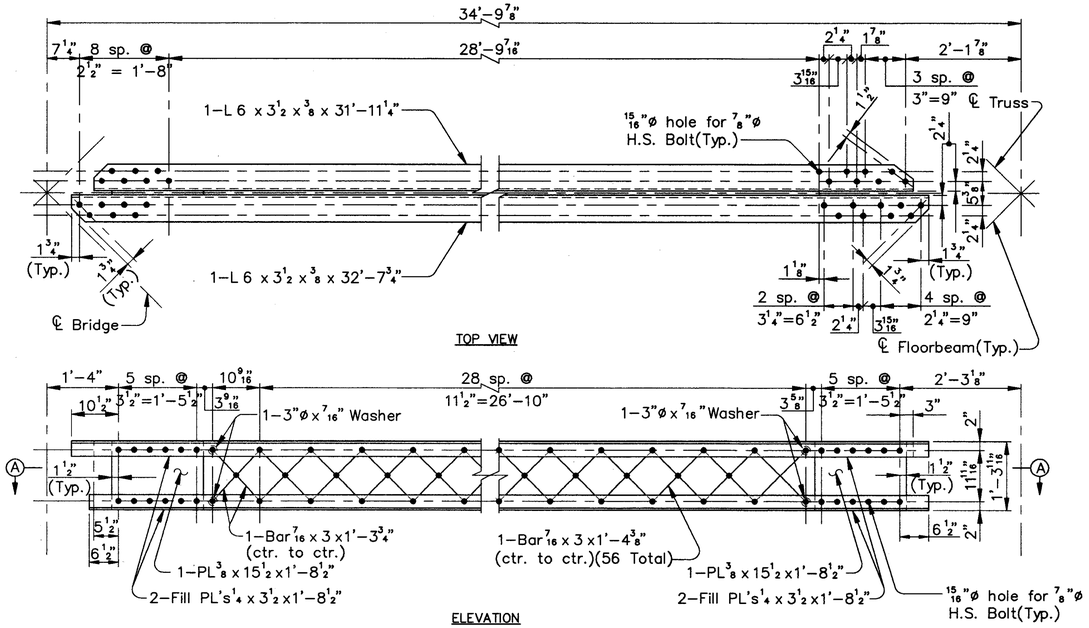

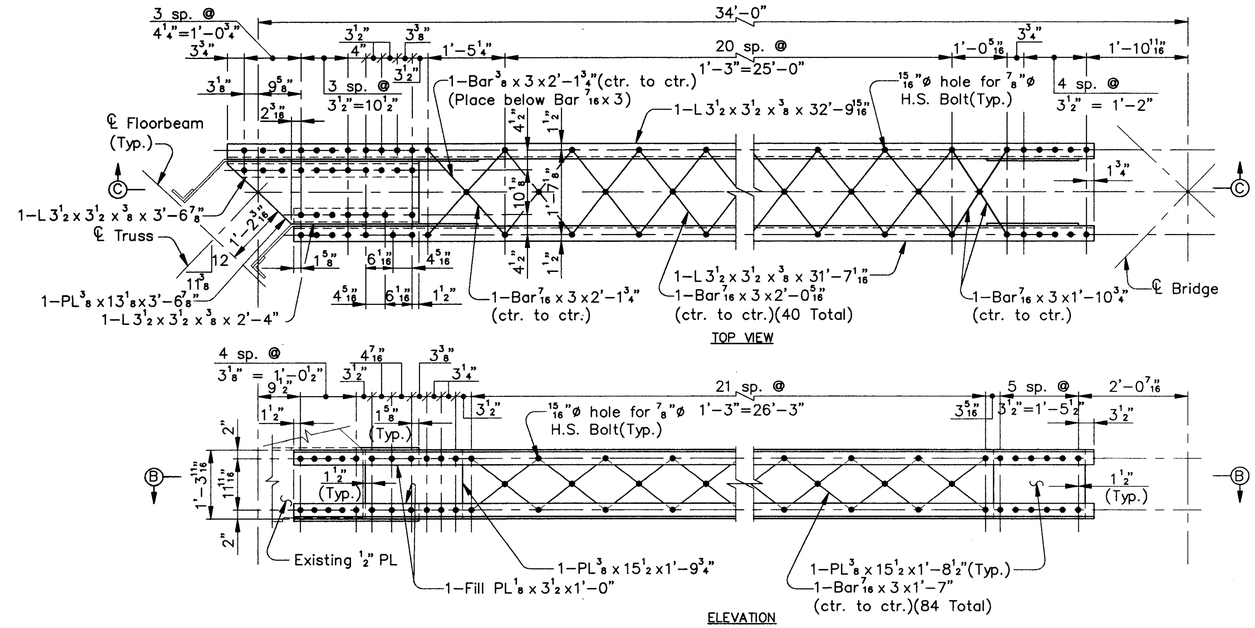

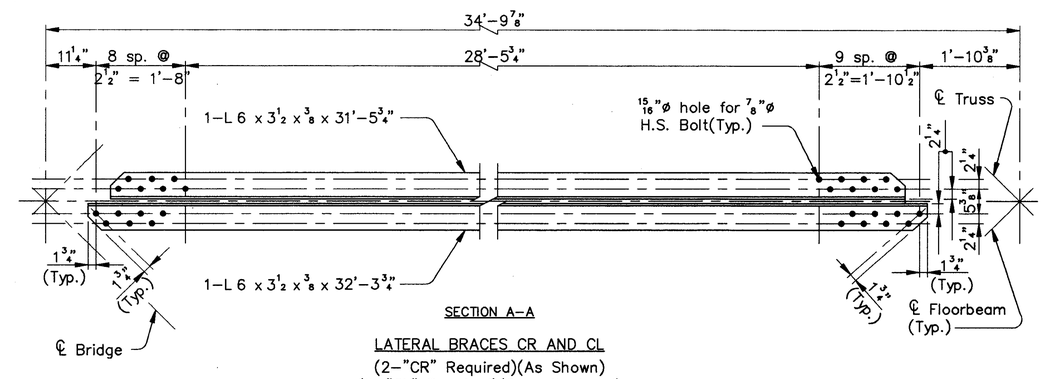

LATERAL BRACES CR AND CL
(2–"CR" Required)(As Shown)
(2–"CL" Required)(Opposite hand)

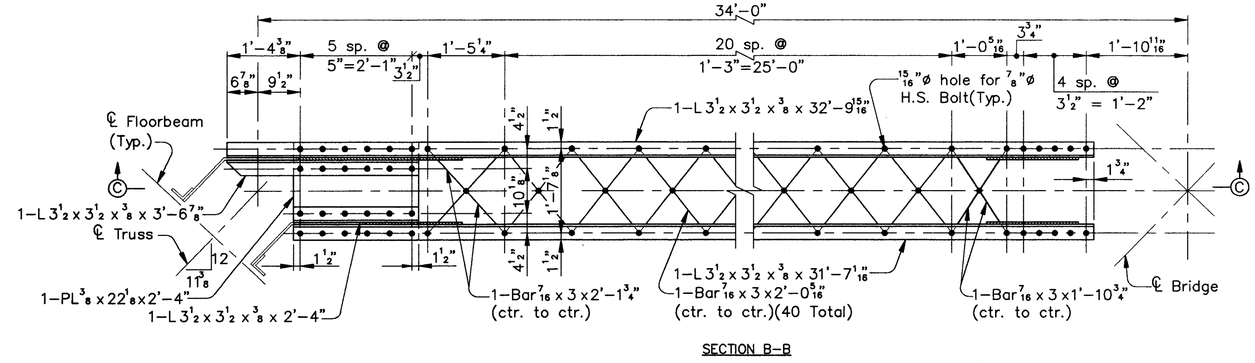

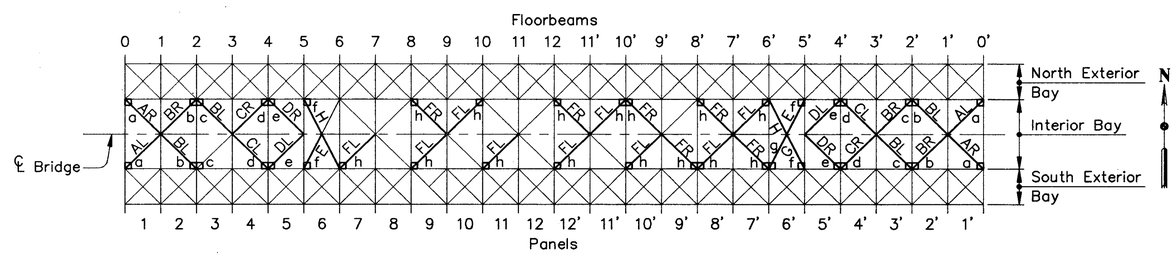

SCHEMATIC UPPER DECK FRAMING PLAN

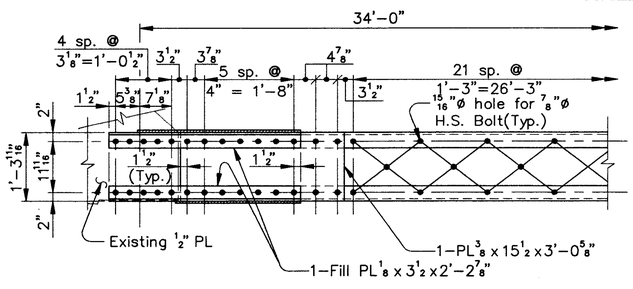

LATERAL BRACES DR AND DL
(2–"DR" Required)(As shown)
(2–"DL" Required)(Opposite hand)

Notes:
For additional Upper Deck Lateral Bracing and Gusset Plate details, see sheets 187, 189, and 190 of 270.

COUNTY BRIDGE NO. 84

HOWARD NEEDLES TAMMEN & BERGENDOFF
ARCHITECTS ENGINEERS PLANNERS
HNTB

REPLACEMENT–UPPER DECK
LATERAL BRACING
BR. NO. CUY – 6 – 1499
REHABILITATION OF
VETERANS MEMORIAL BRIDGE
(U.S. 6, 20, 42 & S.R. 3 OVER CUYAHOGA RIVER)

CLEVELAND CUYAHOGA COUNTY OHIO

DRAWN	TRACED	CHECKED	REVIEWED	REVISED
J.L.V.	J.L.V.	C.K.B.	C.A.B.	
DATE 9/02/92	DATE 9/02/92	DATE 9/03/92	DATE 04/06/94	SHEET 188/270

\11646\STEEL\UDLAT3

FHWA REGION	STATE	PROJECT	
5	OHIO		

321
412

CUYAHOGA COUNTY
CUY - 6 - 14.99

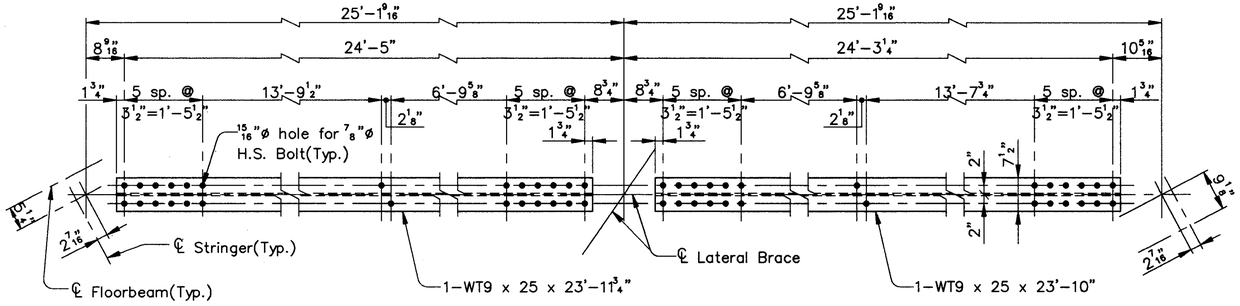

LATERAL BRACE G
(1 Required)

LATERAL BRACE E
(2 Required)

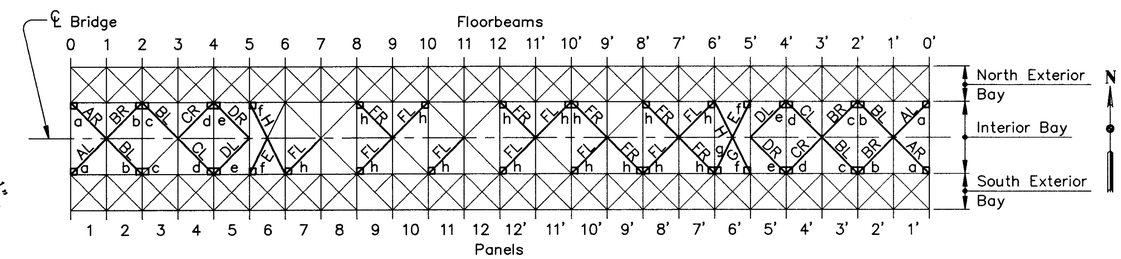

SCHEMATIC UPPER DECK FRAMING PLAN

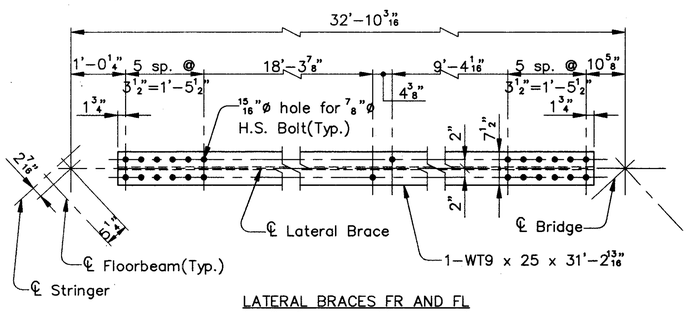

LATERAL BRACES FR AND FL
(6-"FR" Required)(As shown)
(6-"FL" Required)(Opposite hand)

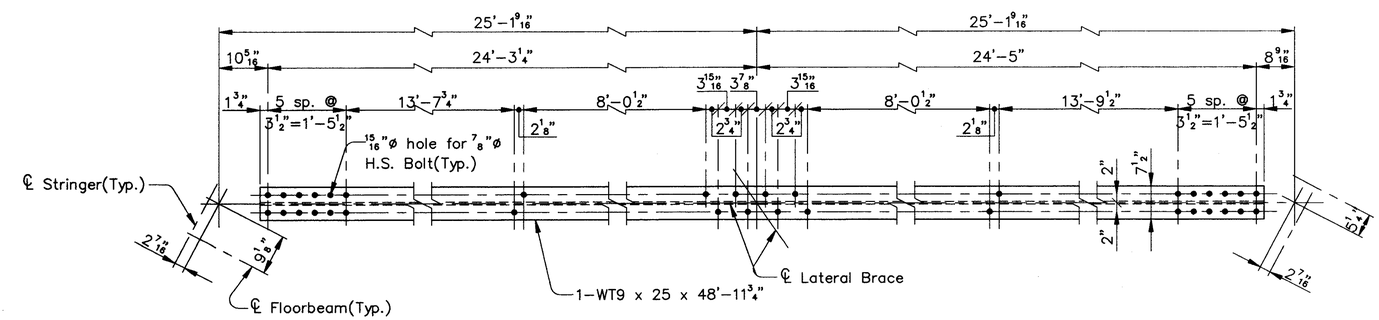

LATERAL BRACE H
(2 Required)

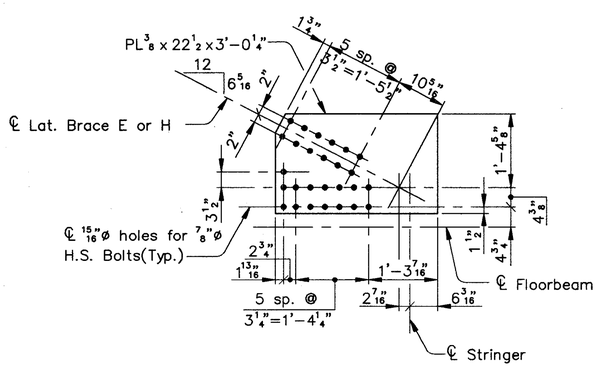

GUSSET PLATE "f"
(4 Required)

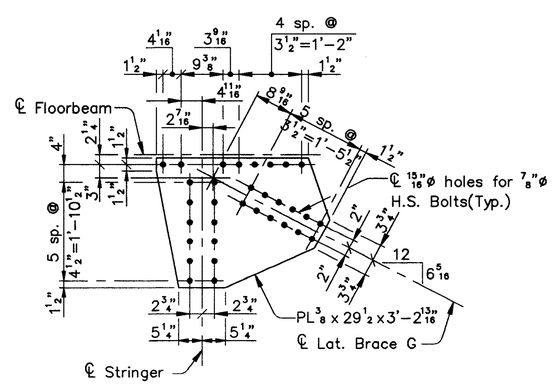

GUSSET PLATE "g"
(1 Required)

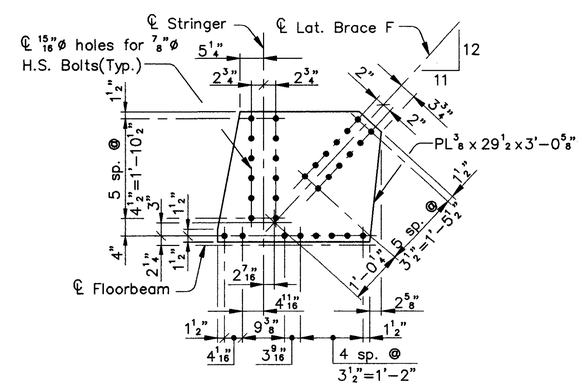

GUSSET PLATE "h"
(15 Required)

Notes:
For additional Upper Deck Lateral Bracing and Gusset Plate details, see sheets 187, 188, and 190 of 270.

COUNTY BRIDGE NO. 84

HOWARD NEEDLES TAMMEN & BERGENDOFF
ARCHITECTS ENGINEERS PLANNERS
HNTB

REPLACEMENT-UPPER DECK
LATERAL BRACING
BR. NO. CUY - 6 - 1499
REHABILITATION OF
VETERANS MEMORIAL BRIDGE
(U.S. 6, 20, 42 & S.R. 3 OVER CUYAHOGA RIVER)
CLEVELAND CUYAHOGA COUNTY OHIO

DRAWN J.L.V.	TRACED J.L.V.	CHECKED C.K.B.	REVIEWED C.A.B.	REVISED
DATE 9/04/92	DATE 9/04/92	DATE 9/05/92	DATE 04/06/94	SHEET 189/270

\11646\STEEL\UDLAT4

FHWA REGION	STATE	PROJECT	
5	OHIO		

322
412

CUYAHOGA COUNTY
CUY - 6 - 14.99

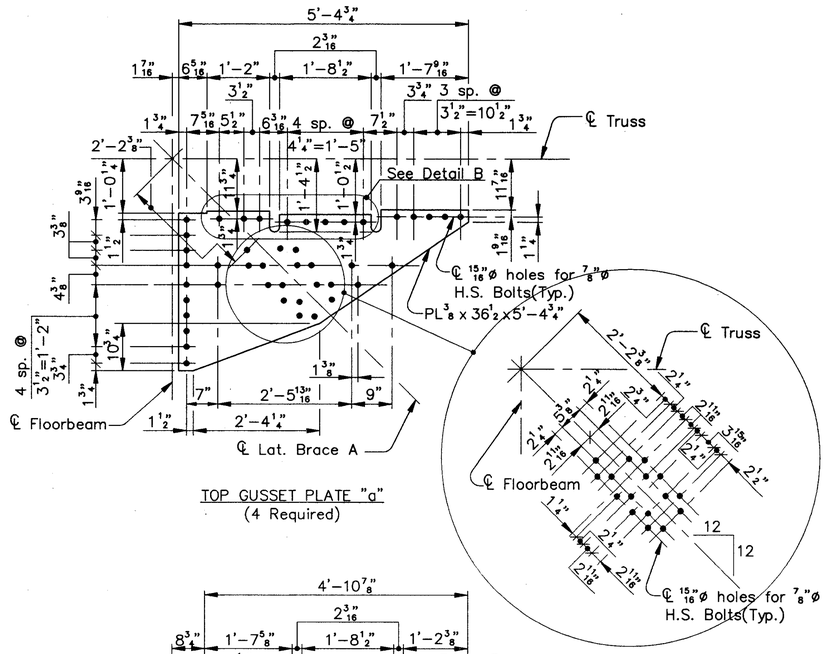

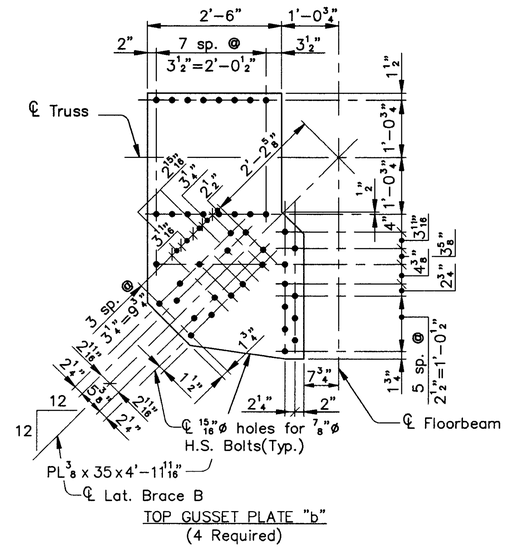

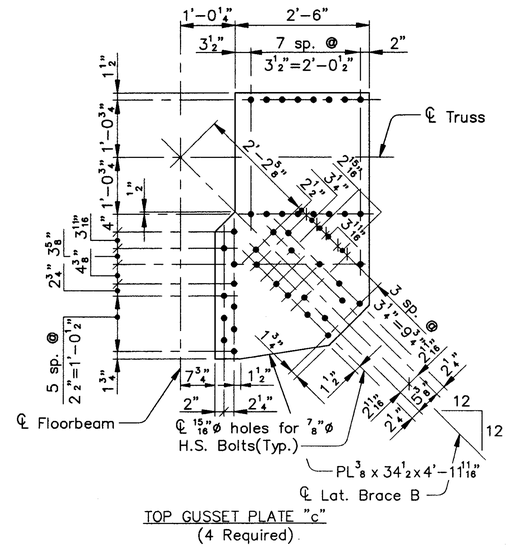

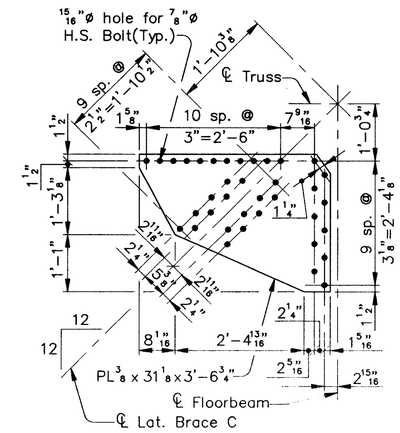

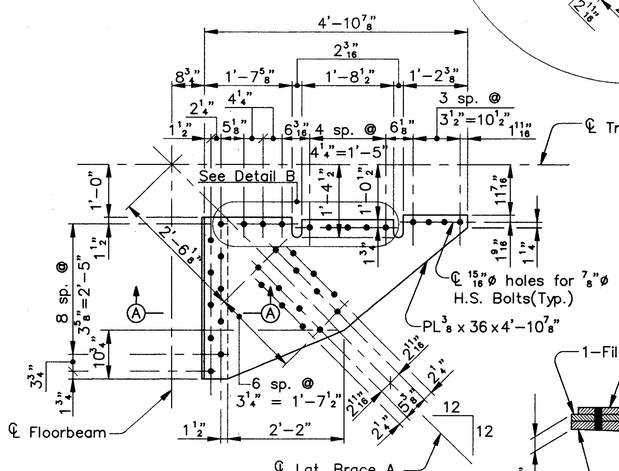

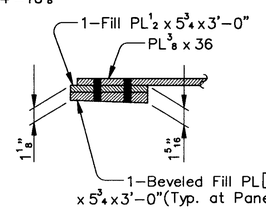

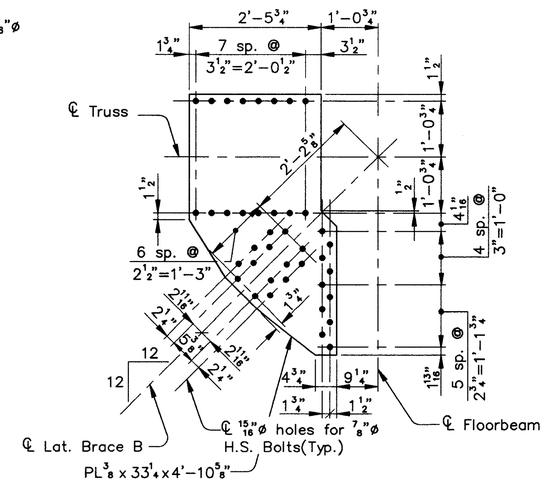

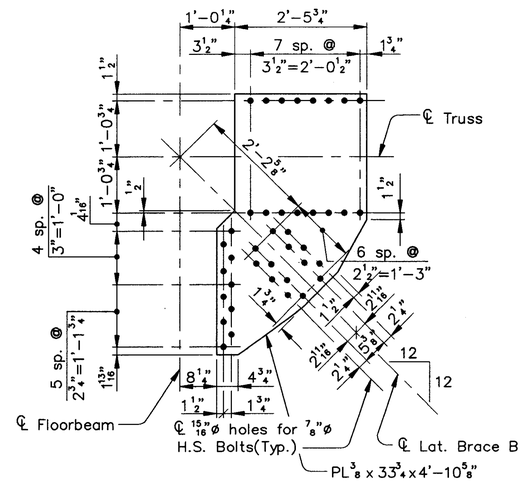

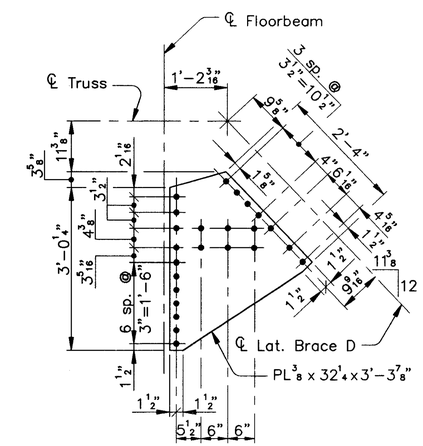

Notes:
For additional Upper Deck Lateral Bracing and Gusset Plate details, see sheets 187 thru 189 of 270.

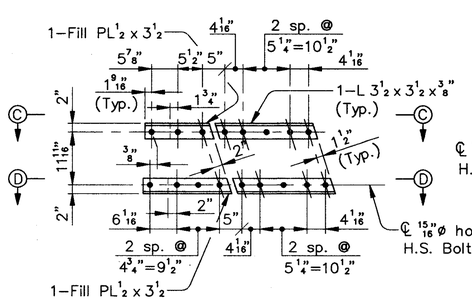

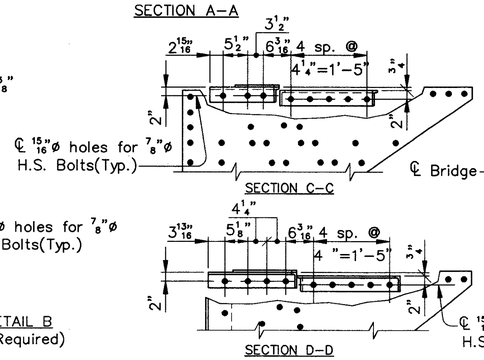

DETAIL B
(4 Required)

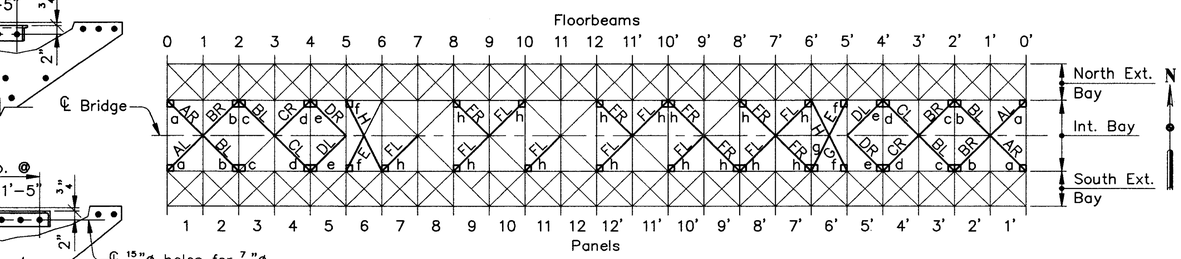

SCHEMATIC UPPER DECK FRAMING PLAN

COUNTY BRIDGE NO. 84

HOWARD NEEDLES TAMMEN & BERGENDOFF
ARCHITECTS ENGINEERS PLANNERS
HNTB

REPLACEMENT-UPPER DECK GUSSET PLATES
BR. NO. CUY - 6 - 1499
REHABILITATION OF VETERANS MEMORIAL BRIDGE
(U.S. 6, 20, 42 & S.R. 3 OVER CUYAHOGA RIVER)
CLEVELAND CUYAHOGA COUNTY OHIO

DRAWN J.L.V.	TRACED J.L.V.	CHECKED C.K.B.	REVIEWED C.A.B.	REVISED
DATE 8/24/92	DATE 8/24/92	DATE 9/04/92	DATE 4/06/94	SHEET 190/270

\11646\STEEL\UD-GUSS1.DWG

FHWA REGION	STATE	PROJECT	
5	OHIO		

323/412

CUYAHOGA COUNTY
CUY – 6 – 14.99

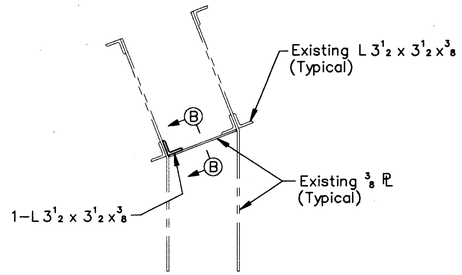

SECTION A–A

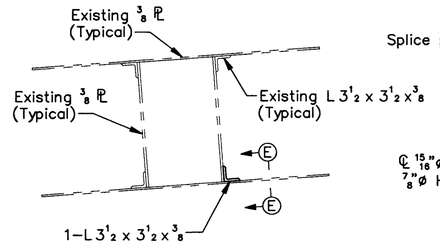

SECTION D–D

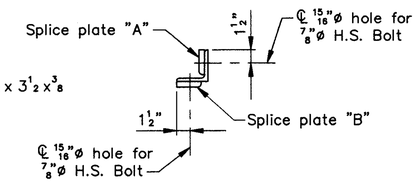

SECTION G–G

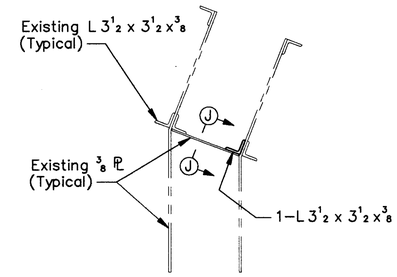

SECTION H–H

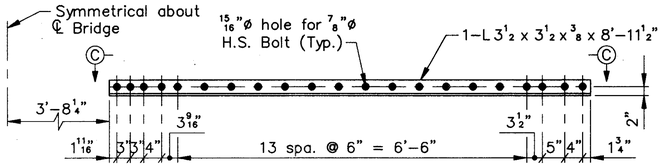

SECTION B–B
(Gusset PL, Diaphragm PL, and Angle not shown)
(1 Required as shown, 1 Required opposite hand)

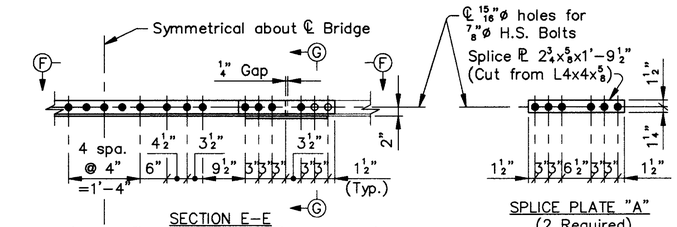

SECTION E–E
(Gusset PL and Diaphragm PL not shown)
(o–Denotes hole to be field drilled thru existing steel)

SPLICE PLATE "A"
(2 Required)

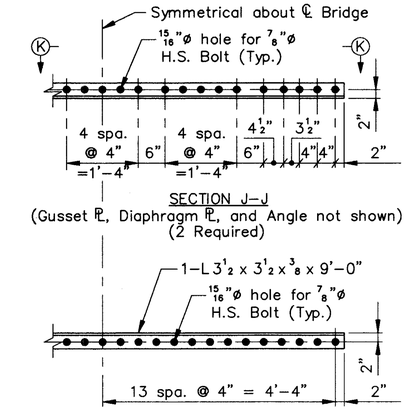

SECTION J–J
(Gusset PL, Diaphragm PL, and Angle not shown)
(2 Required)

VIEW K–K

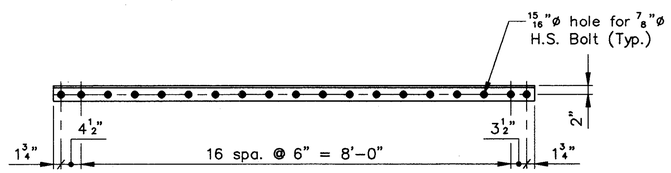

VIEW C–C

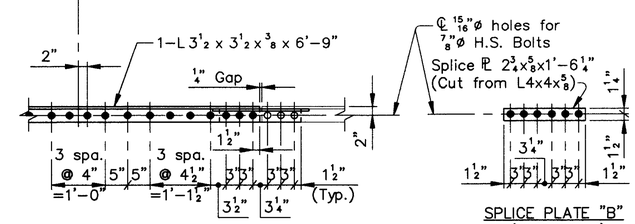

VIEW F–F
(o–Denotes hole to be field drilled thru existing steel)

SPLICE PLATE "B"
(2 Required)

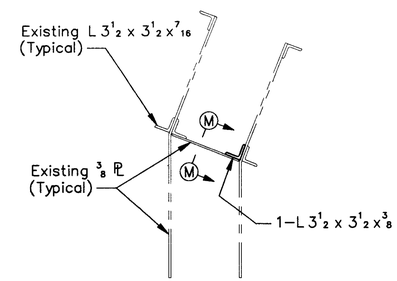

SECTION L–L

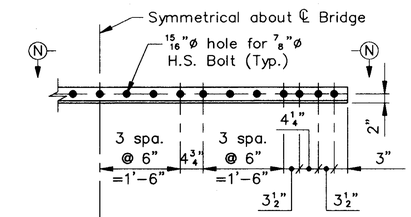

SECTION M–M
(Gusset PL, Diaphragm PL, and Angle not shown)
(1 Required)

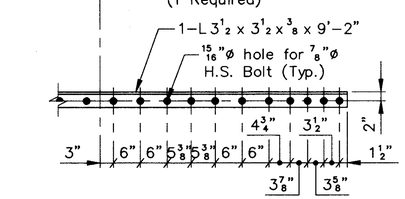

VIEW N–N

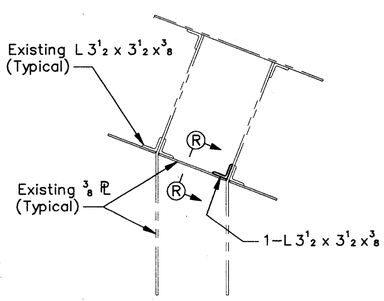

SECTION P–P

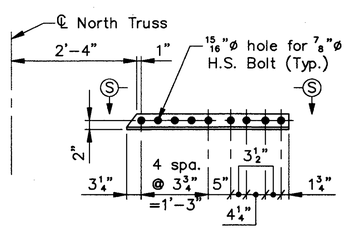

SECTION R–R
(Gusset PL, Diaphragm PL, and Angle not shown)
(1 Required at North Truss as shown)
(1 Required at South Truss opposite hand)

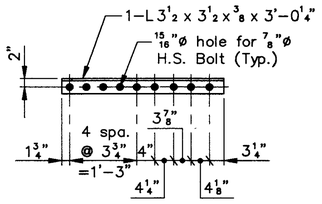

VIEW S–S

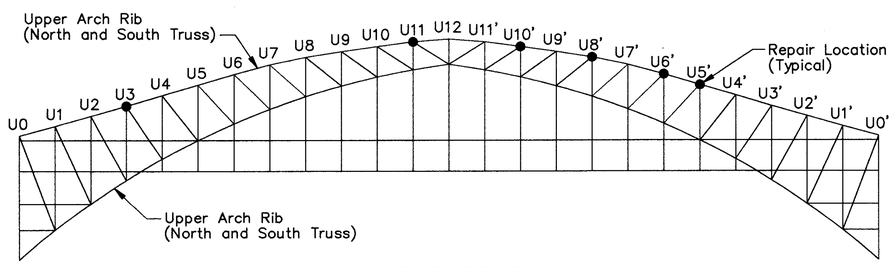

SCHEMATIC ELEVATION

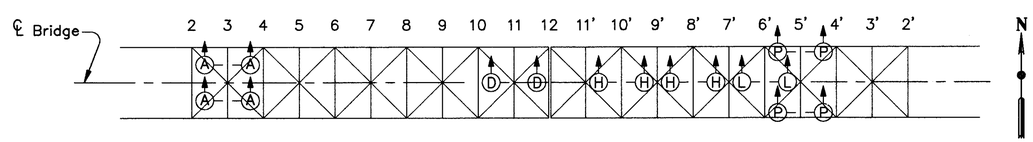

SCHEMATIC – UPPER ARCH RIBS FRAMING PLAN

COUNTY BRIDGE NO. 84

HOWARD NEEDLES TAMMEN & BERGENDOFF
ARCHITECTS ENGINEERS PLANNERS
HNTB

UPPER CHORD LATERAL BRACING
REPAIR DETAILS
BR. NO. CUY – 6 – 1499
REHABILITATION OF
VETERANS MEMORIAL BRIDGE
(U.S. 6, 20, 42 & S.R. 3 OVER CUYAHOGA RIVER)
CLEVELAND CUYAHOGA COUNTY OHIO

DRAWN	TRACED	CHECKED	REVIEWED	REVISED
ADY	ADY	WDD	CAB	
DATE 05/13/94	DATE 05/13/94	DATE 05/18/94	DATE 05/31/94	SHEET 191/270

\11646\STEEL\UDLBREP

FHWA REGION	STATE	PROJECT	
5	OHIO		

324/412

CUYAHOGA COUNTY
CUY – 6 – 14.99

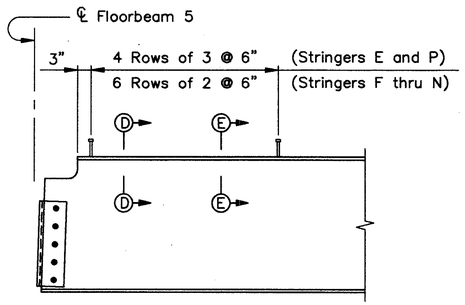

TYPICAL UPPER DECK STRINGER ELEVATION
(Stringers E thru P – Panel 6)
(Stringers E thru P – Panel 6' Opposite Hand)

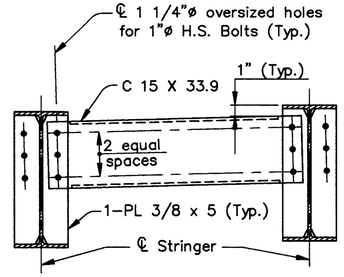

END DIAPHRAGM DETAIL
(Looking from FB 5 toward FB 6)

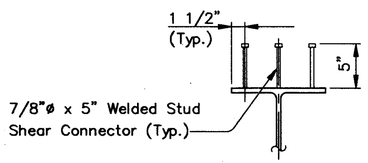

SECTION D–D
(Stringers A thru E and P thru U)

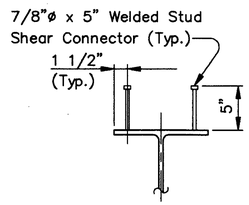

SECTION E–E
(Stringers F thru N)

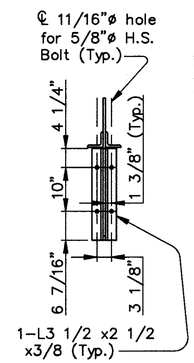

VIEW B–B

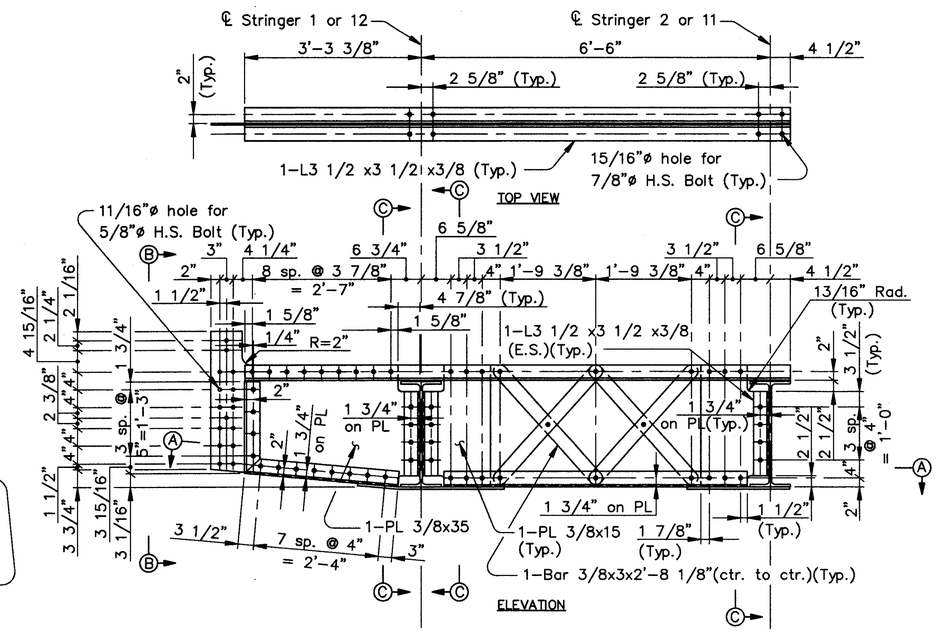

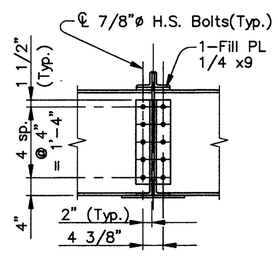

SECTION C–C

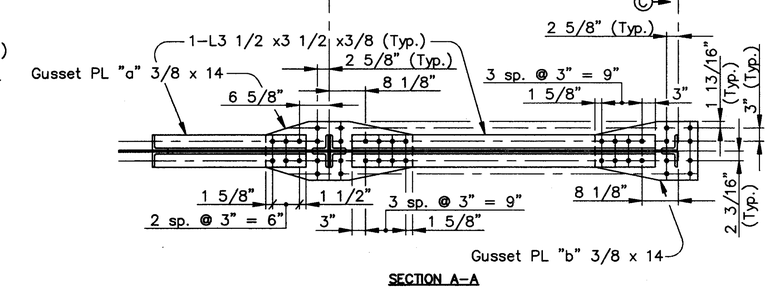

SECTION A–A

BRACKET B12
(25 Required)

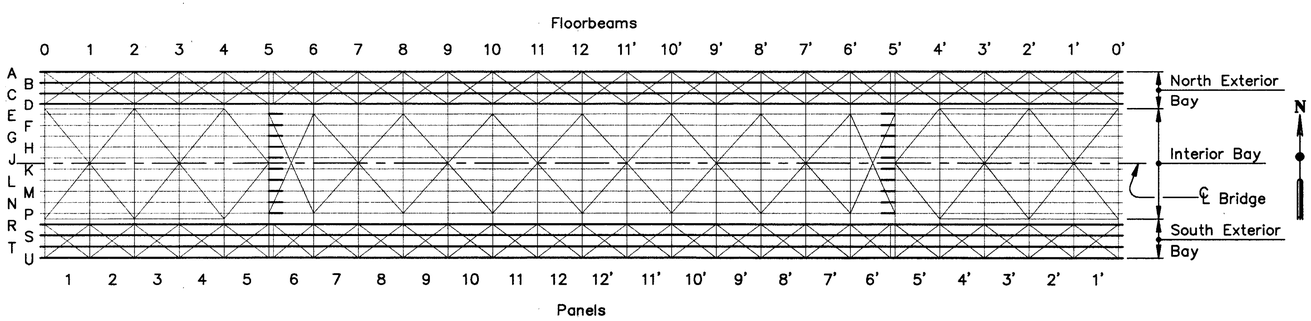

TYPICAL UPPER DECK STRINGER ELEVATION
(Stringers A thru D and R thru U)

WELDED STUD SHEAR CONNECTOR LOCATION PLAN – UPPER DECK

Notes:
For locations of Bracket B12, see Sheet 125 of 270.
For location of End Diaphragms, see Sheets 133 thru 135 of 270.
FB denotes Floorbeam.
ES denotes Each Side.

COUNTY BRIDGE NO. 84

HOWARD NEEDLES TAMMEN & BERGENDOFF
ARCHITECTS ENGINEERS PLANNERS
HNTB

MISCELLANEOUS STRUCTURAL STEEL DETAILS
BR. NO. CUY – 6 – 1499
REHABILITATION OF
VETERANS MEMORIAL BRIDGE
(U.S. 6, 20, 42 & S.R. 3 OVER CUYAHOGA RIVER)
CLEVELAND CUYAHOGA COUNTY OHIO

DRAWN	TRACED	CHECKED	REVIEWED	REVISED
ADY/JLV	ADY/JLV	JLV/ADY	CAB	
DATE 2/25/94	DATE 2/25/94	DATE 03/31/94	DATE 4/06/94	SHEET 192/270

\11646\STEEL\MISCSSR

FHWA REGION	STATE	PROJECT	
5	OHIO		

325
412

CUYAHOGA COUNTY
CUY- 6 - 14.99

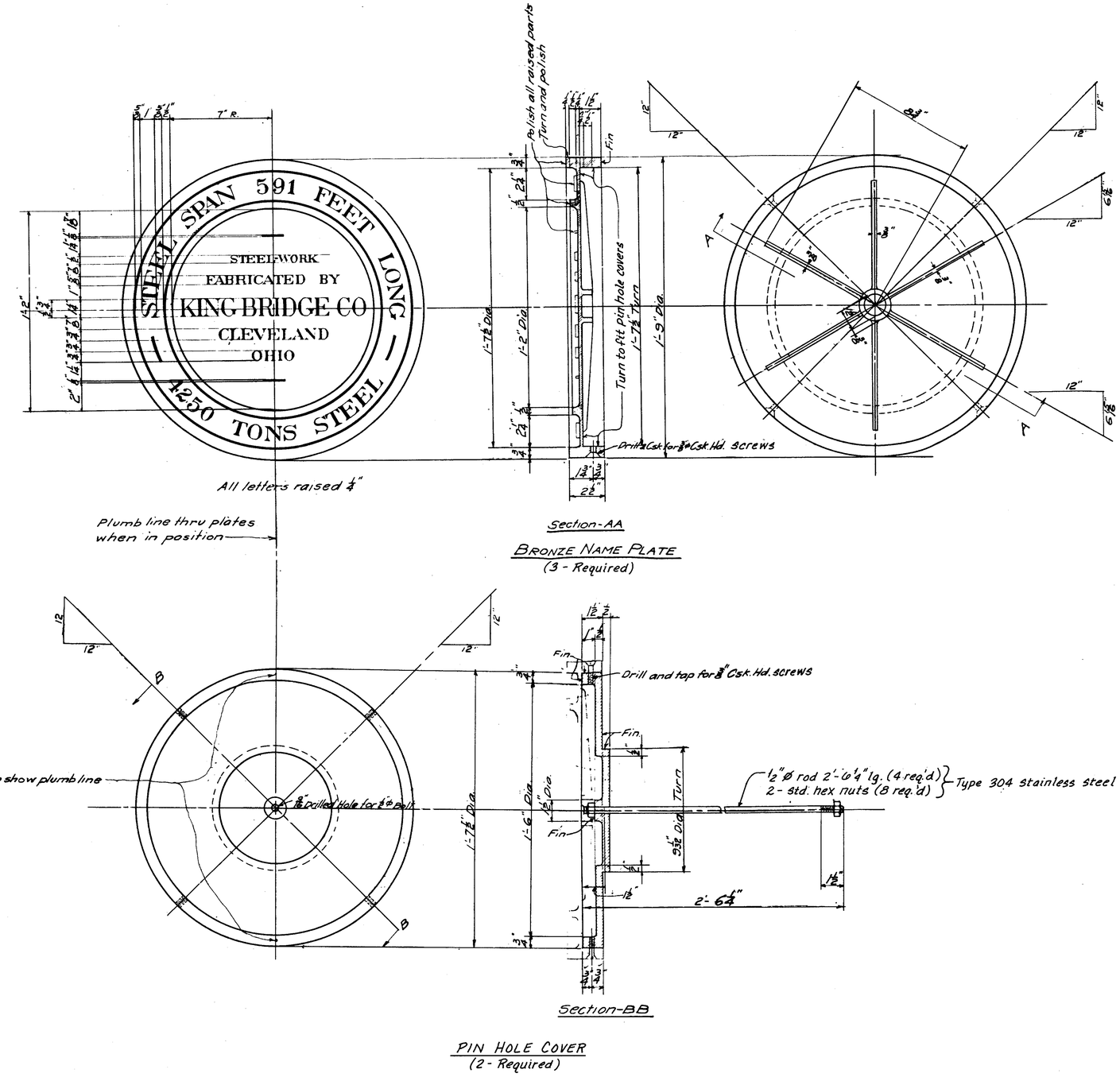

NOTES:
CONTRACTOR SHALL FURNISH 32 – 3/8"Ø TYPE 304 STAINLESS STEEL COUNTERSUNK HEAD SCREWS FOR SECURING BRONZE NAME PLATES. THE HEADS OF THE SCREWS SHALL BE VANDALPROOFED, TO THE SATISFACTION OF THE ENGINEER, AFTER THE BRONZE NAME PLATES HAVE BEEN INSTALLED.

DRILL AND TAP NAME PLATE AND PIN HOLE COVER WHILE ASSEMBLED AND MATCH–MARK.

PAYMENT FOR THE BRONZE NAME PLATES, PIN HOLE COVERS, 1/2"Ø RODS, NUTS, AND SCREWS SHALL BE INCLUDED WITH ITEM SPECIAL – BRONZE NAME PLATES.

COUNTY BR. NO. 84

HOWARD NEEDLES TAMMEN & BERGENDOFF
ARCHITECTS ENGINEERS PLANNERS
HNTB

NAME PLATE DETAILS
SPAN 4
BR. NO. CUY - 6 - 1499
REHABILITATION OF
VETERANS MEMORIAL BRIDGE
(U.S. 6, 20, 42 & S.R. 3 OVER CUYAHOGA RIVER)

CLEVELAND CUYAHOGA COUNTY OHIO

DRAWN	TRACED	CHECKED	REVIEWED	REVISED
CMM	CMM	ADY	CAB	
DATE 3-24-94	DATE 3-25-94	DATE 3-31-94	DATE 4-6-94	SHEET 192a/270

FHWA REGION	STATE	PROJECT	
5	OHIO		

326/412

CUYAHOGA COUNTY
CUY – 6 – 14.99

ALL REINFORCING BAR MARKS SHALL BE PREFIXED AS FOLLOWS:		
Span 1A	–	1AUES
Span 1B	–	1BUES

Note:
South sidewalk reinforcement shown, north sidewalk reinforcement symmetrical about ℄ Veterans Memorial Bridge for Span 1B only.

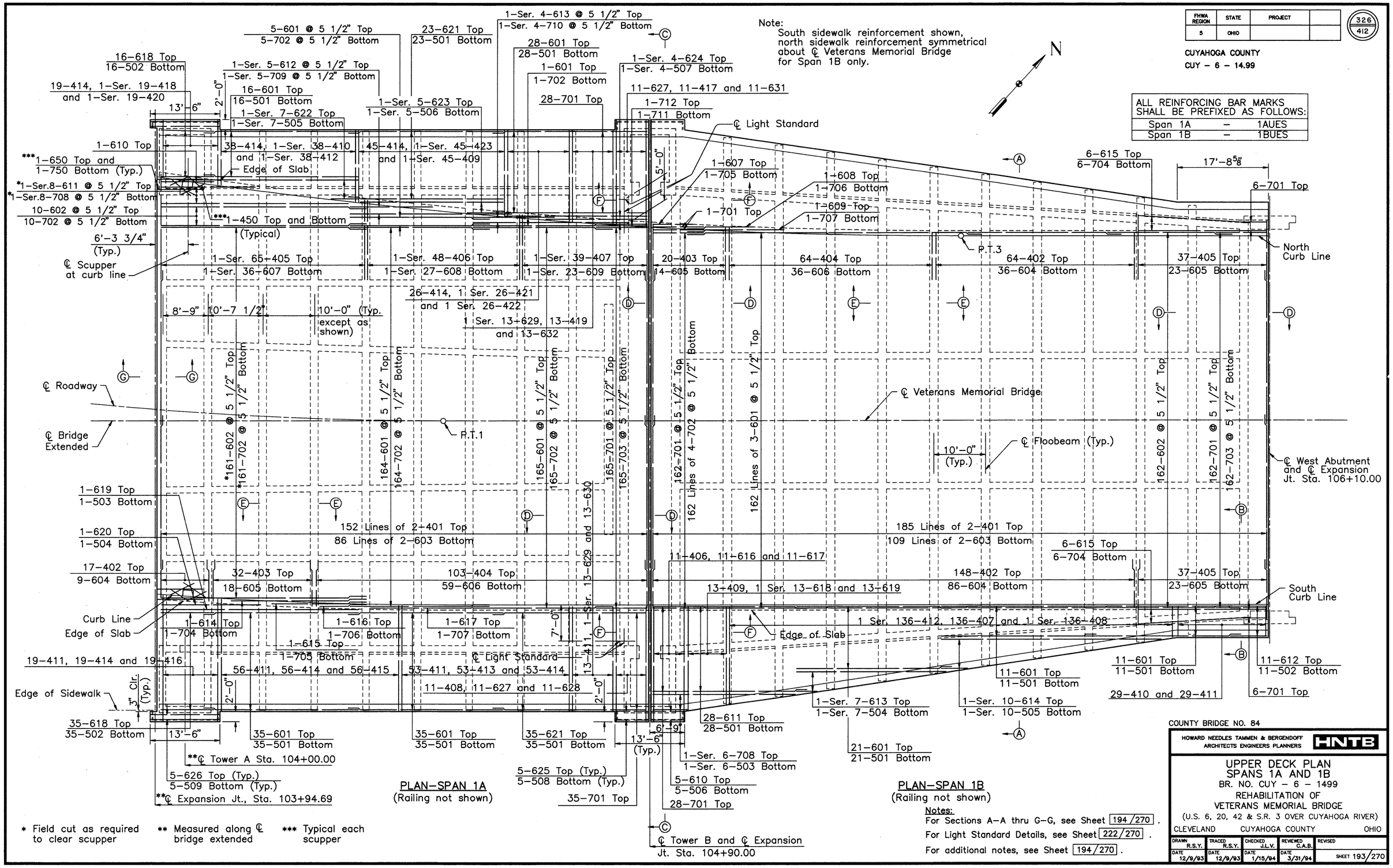

PLAN–SPAN 1A
(Railing not shown)

PLAN–SPAN 1B
(Railing not shown)

Notes:
For Sections A–A thru G–G, see Sheet 194/270.
For Light Standard Details, see Sheet 222/270.
For additional notes, see Sheet 194/270.

* Field cut as required to clear scupper
** Measured along ℄ bridge extended
*** Typical each scupper

COUNTY BRIDGE NO. 84

HOWARD NEEDLES TAMMEN & BERGENDOFF
ARCHITECTS ENGINEERS PLANNERS
HNTB

UPPER DECK PLAN
SPANS 1A AND 1B
BR. NO. CUY – 6 – 1499
REHABILITATION OF
VETERANS MEMORIAL BRIDGE
(U.S. 6, 20, 42 & S.R. 3 OVER CUYAHOGA RIVER)
CLEVELAND CUYAHOGA COUNTY OHIO

DRAWN	TRACED	CHECKED	REVIEWED	REVISED
R.S.Y.	R.S.Y.	J.L.V.	C.A.B.	
DATE 12/9/93	DATE 12/9/93	DATE 1/15/94	DATE 3/31/94	SHEET 193/270

\1646\SPAN1A.DWG

FHWA REGION	STATE	PROJECT	
5	OHIO		

327/412

CUYAHOGA COUNTY
CUY – 6 – 14.99

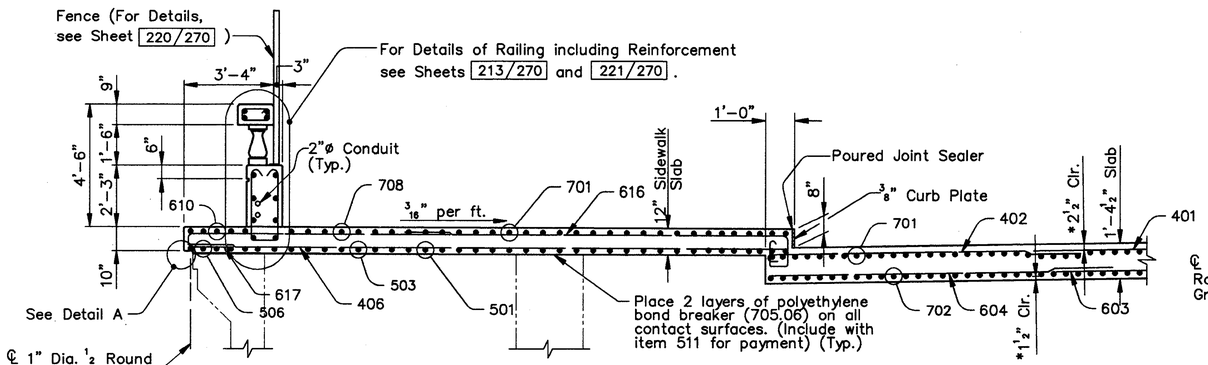

SECTION C–C

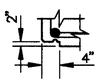

DETAIL A

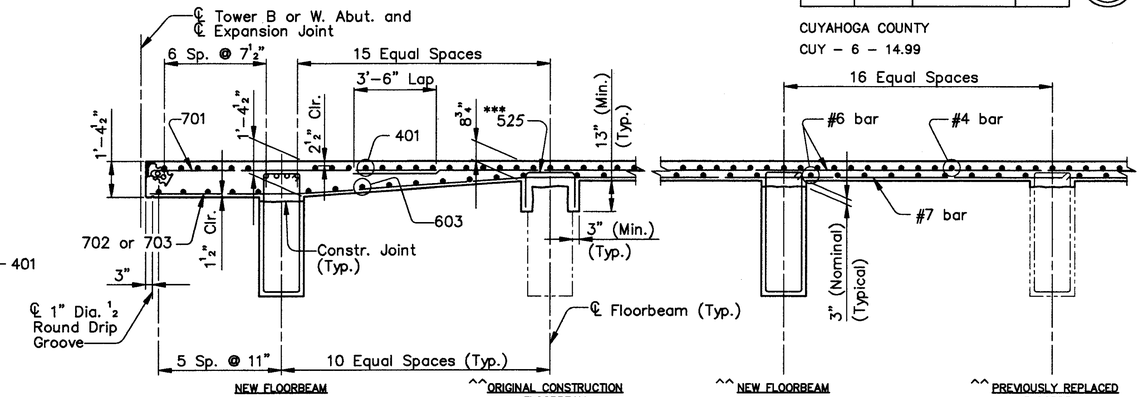

SECTION D–D

SECTION E–E

Notes:

* Typical for Deck and Sidewalk Slabs.

**Original Construction Jack Arches shown. For details of Previously Replaced Jack Arches, see Sheet 48/270. For Jack Arch Replacement Details, see Sheet 116/270. For Existing Reinforcement in Jack Arches, see Sheet 51/270.

^^Location of Floorbeam types are arbitrarily shown and may not represent actual locations.

*** Install 525 bars to match every other longitudinal bar at the following Original Construction Floorbeams:

SPAN 1A
South Bay – Floorbeam
1A,2 thru 1A,8

SPAN 1B
North Bay – Floorbeam
1B,2 thru 1B,6
South Bay – Floorbeam
1B,2
1B,3

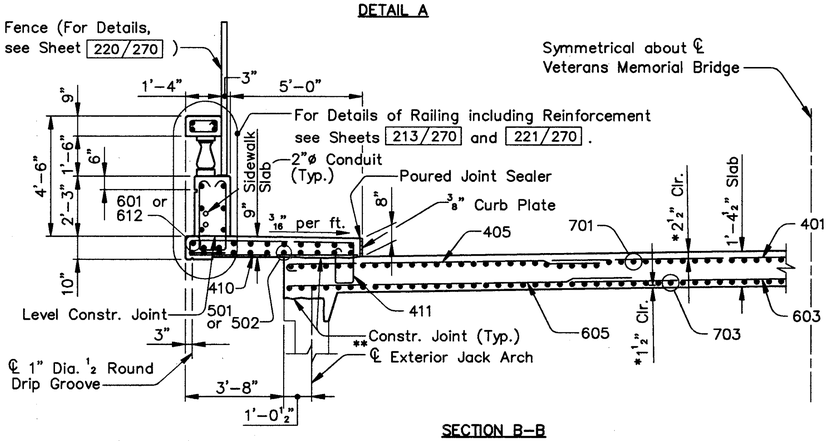

SECTION B–B

(For additional details see section A–A)

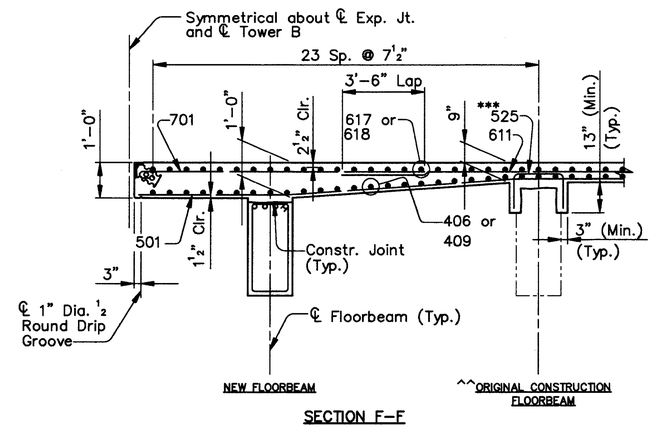

SECTION F–F

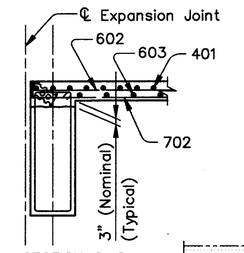

SECTION G–G

425 Dowel Bars (with an 8" horz. leg placed in the transverse direction) @ 18" ctrs. (The bar shall be embedded into a 1"ø x 12" (Min.) hole and the bar shall be 2 1/2" clear from the top of the new deck)

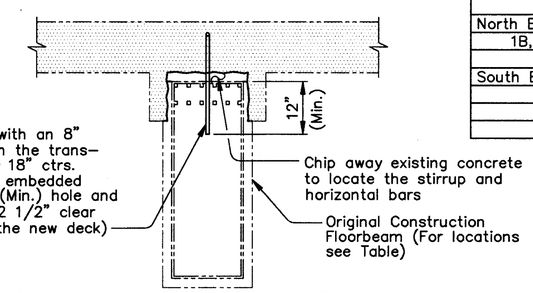

ORIGINAL CONSTRUCTION FLOORBEAM

MODIFICATION DETAIL

SPAN 1A
South Bay – Floorbeam
1A,8

SPAN 1B
South Bay – Floorbeam
1B,2
North Bay – Floorbeam
1B,2

Legend

Indicates Deck Removal

Notes:

For Member Identification and Removal Plan, see Sheet 23/270.

For Floorbeam Removal see Sheet 50/270.

For Floorbeam Replacement see Sheet 118/270

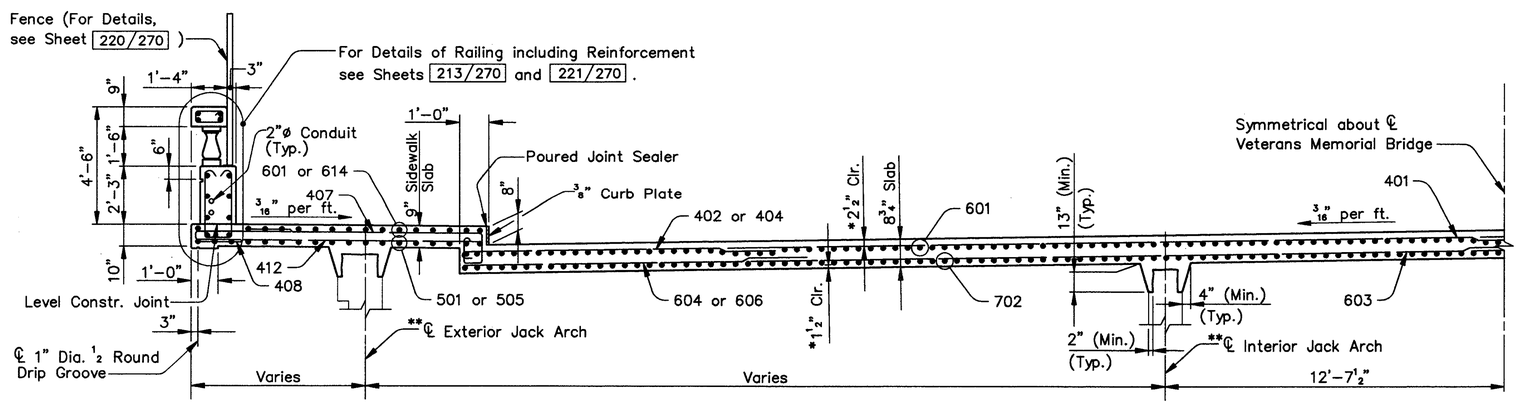

SECTION A–A

MINIMUM SPLICE LENGTH	
BAR	LENGTH
# 4	1'-9"
# 5	2'-0"
# 6 (TRANSVERSE)	2'-5"
# 6 (LONGITUDINAL)	3'-0"
# 7	4'-8"

(Typical except as shown in Details)

ALL REINFORCING BAR MARKS SHALL BE PREFIXED AS FOLLOWS:		
SPAN 1A	–	1AUES
SPAN 1B	–	1BUES

COUNTY BRIDGE NO. 84

HOWARD NEEDLES TAMMEN & BERGENDOFF
ARCHITECTS ENGINEERS PLANNERS
HNTB

UPPER DECK DETAILS
SPANS 1A AND 1B
BR. NO. CUY – 6 – 1499
REHABILITATION OF
VETERANS MEMORIAL BRIDGE
(U.S. 6, 20, 42 & S.R. 3 OVER CUYAHOGA RIVER)

CLEVELAND CUYAHOGA COUNTY OHIO

DRAWN R.S.Y.	TRACED R.S.Y.	CHECKED J.L.V.	REVIEWED C.A.B.	REVISED
DATE 1/12/94	DATE 1/12/94	DATE 1/15/94	DATE 3/31/94	SHEET 194/270

\11646\CONCRETE\SPAN1A1B.DWG

FHWA REGION	STATE	PROJECT	
5	OHIO		

328
412

CUYAHOGA COUNTY
CUY – 6 – 14.99

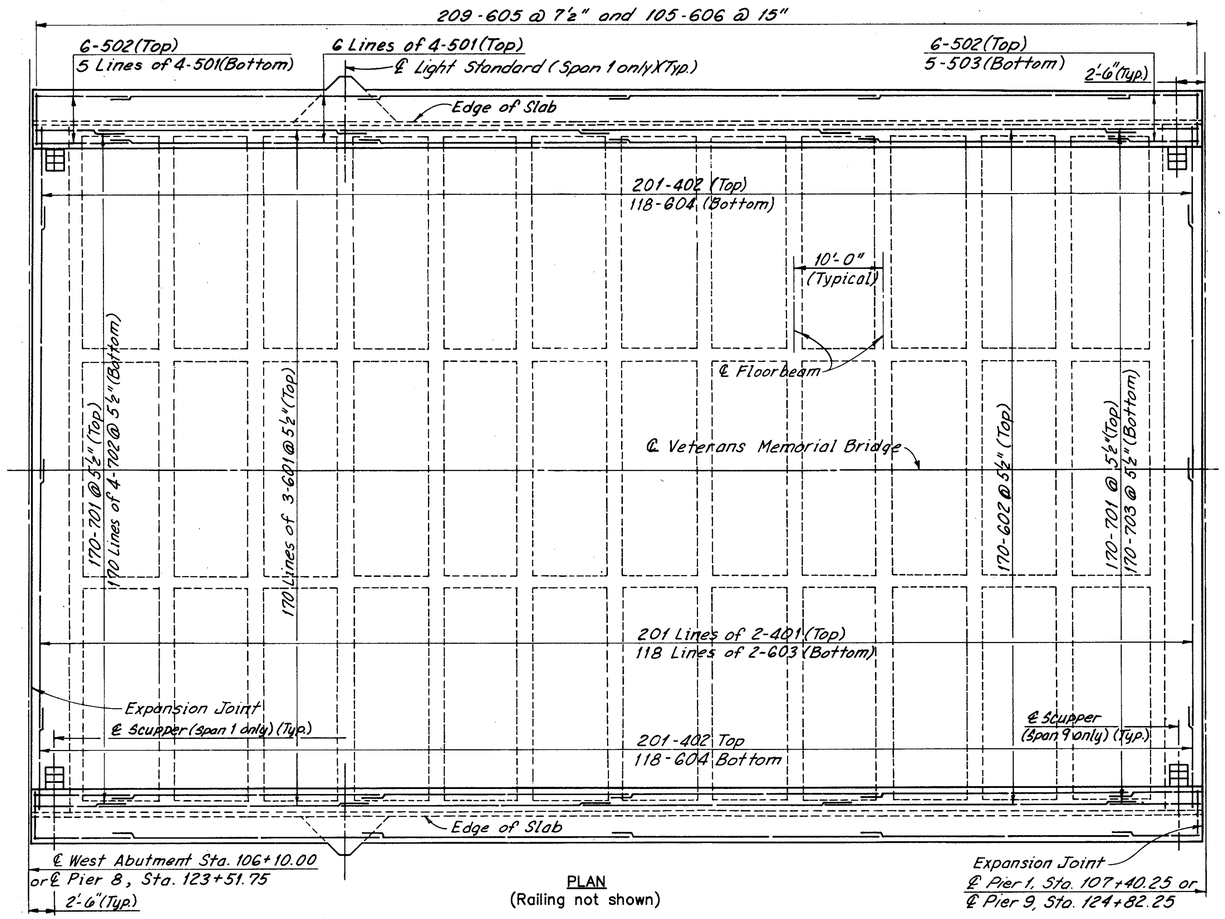

PLAN
(Railing not shown)

Note:
Field cut 402 and 604 bars as required to clear the scuppers.

ALL REINFORCING BAR MARKS SHALL BE PREFIXED AS FOLLOWS:		
SPAN 1	–	1UES
SPAN 9	–	9UES

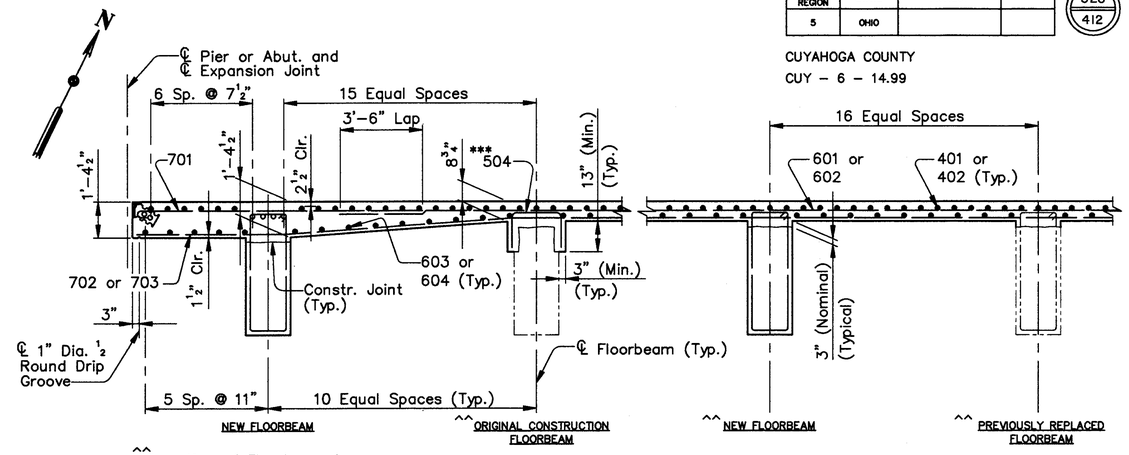

^^ Location of Floorbeam types are arbitrarily shown and may not represent actual locations.

TYPICAL LONGITUDINAL SECTION
(Transverse Reinf. in Floorbeams not shown)

*** Install 26–504 bars (to match every other longitudinal bar) at the following Original Construction Floorbeams:

SPAN 1	SPAN 9
North Bay – Floorbeam	North Bay – Floorbeam
1, 4	9, 2 thru 9, 6
1, 6	9, 11
1, 7	South Bay – Floorbeam
1, 8	9, 2 thru 9, 12

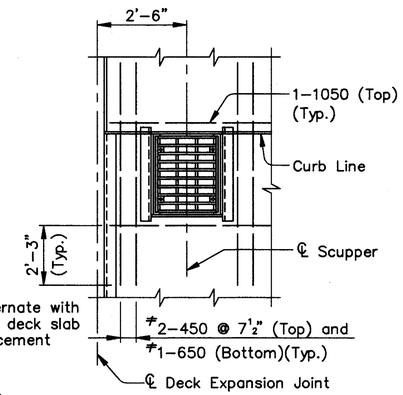

SCUPPER DETAIL
(Typical for Spans 1 thru 3, and Spans 5 thru 10)

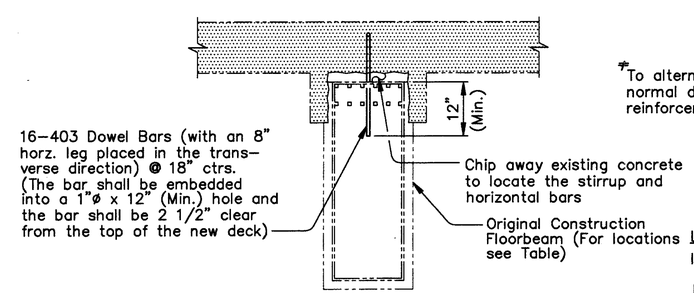

ORIGINAL CONSTRUCTION FLOORBEAM
MODIFICATION DETAIL

SPAN 9
North Bay – Floorbeam
9, 2
South Bay – Floorbeam
9, 2 and 9, 12

Legend
Indicates Deck Removal

Notes:
For Member Identification and Removal Plan, see Sheet 23/270.
For Floorbeam Removal Details, see Sheet 50/270.
For Floorbeam Details, see Sheet 118/270.
For Light Standard Support Details, see Sheet 222/270.

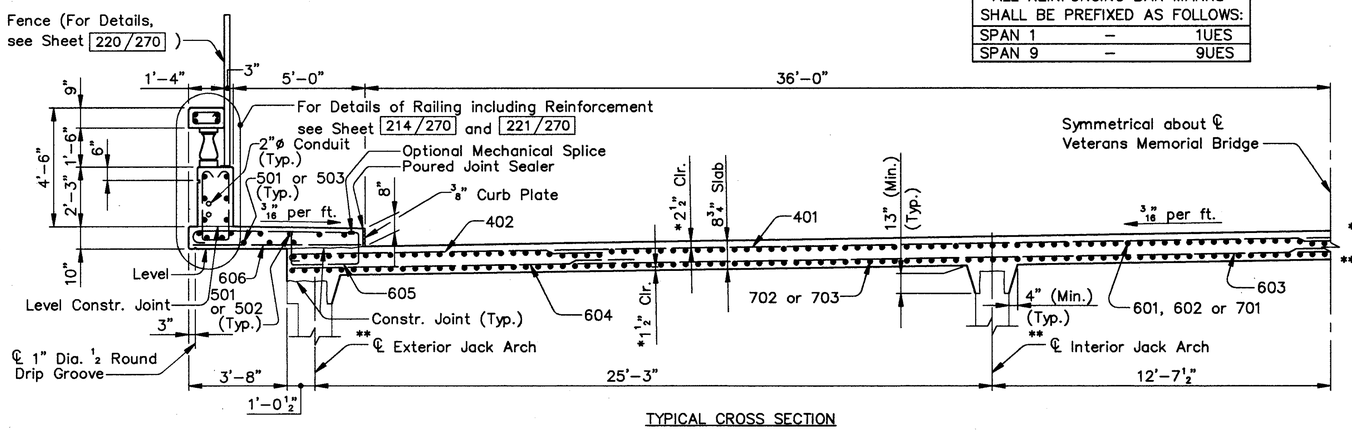

TYPICAL CROSS SECTION

Notes:
* Typical for Deck and Sidewalk Slabs.
** Original Construction Jack Arches shown.
For details of Previously Replaced Jack Arches, see Sheet 48/270.
For Jack Arch Replacement Details, see Sheet 116/270.
For Existing Reinforcement in Jack Arches, see Sheet 51/270.

MINIMUM SPLICE LENGTH	
BAR	LENGTH
# 4	1'-9"
# 5	2'-0"
# 6 (TRANSVERSE)	2'-5"
# 6 (LONGITUDINAL)	3'-0"
# 7	4'-8"

(Typical except as shown in Details)

COUNTY BRIDGE NO. 84

HOWARD NEEDLES TAMMEN & BERGENDOFF
ARCHITECTS ENGINEERS PLANNERS
HNTB

UPPER DECK PLAN
SPANS 1 AND 9
BR. NO. CUY – 6 – 1499
REHABILITATION OF
VETERANS MEMORIAL BRIDGE
(U.S. 6, 20, 42 & S.R. 3 OVER CUYAHOGA RIVER)
CLEVELAND CUYAHOGA COUNTY OHIO

DRAWN	TRACED	CHECKED	REVIEWED	REVISED
R.S.Y./J.L.V.	R.S.Y./J.L.V.	J.L.V./R.S.Y.	C.A.B.	
DATE 2/23/94	DATE 2/23/94	DATE 2/24/94	DATE 4/06/94	SHEET 195/270

\11646\CONCRETE\SPAN19.DWG

FHWA REGION	STATE	PROJECT	
5	OHIO		

329
412

CUYAHOGA COUNTY
CUY – 6 – 14.99

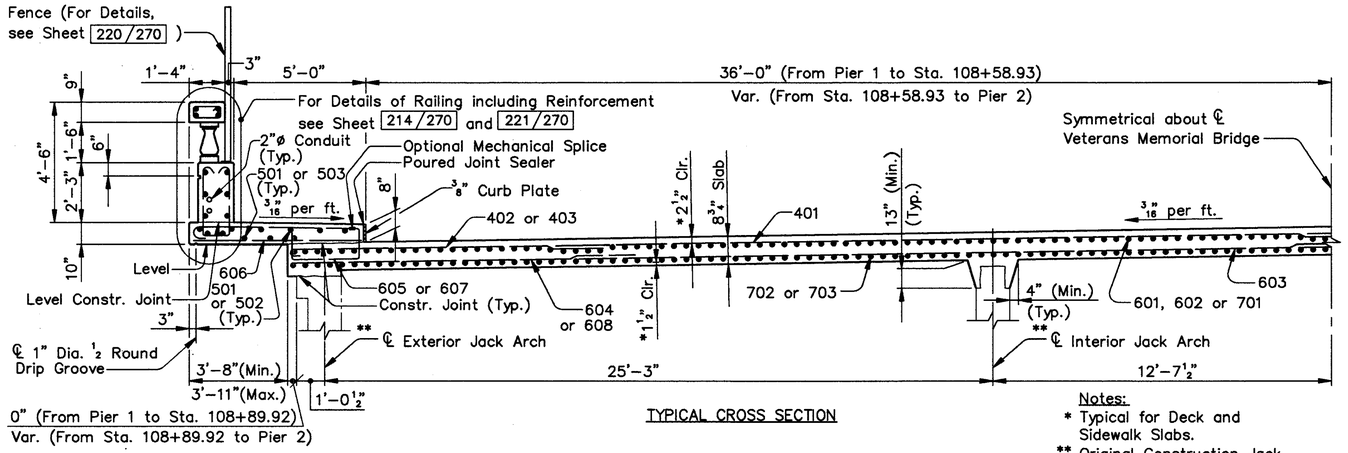

TYPICAL CROSS SECTION

Note:
Field cut 402 and 604 bars as required to clear the scuppers.

Notes:
* Typical for Deck and Sidewalk Slabs.
** Original Construction Jack Arches shown.
For additional notes, see Sheet 195/270.

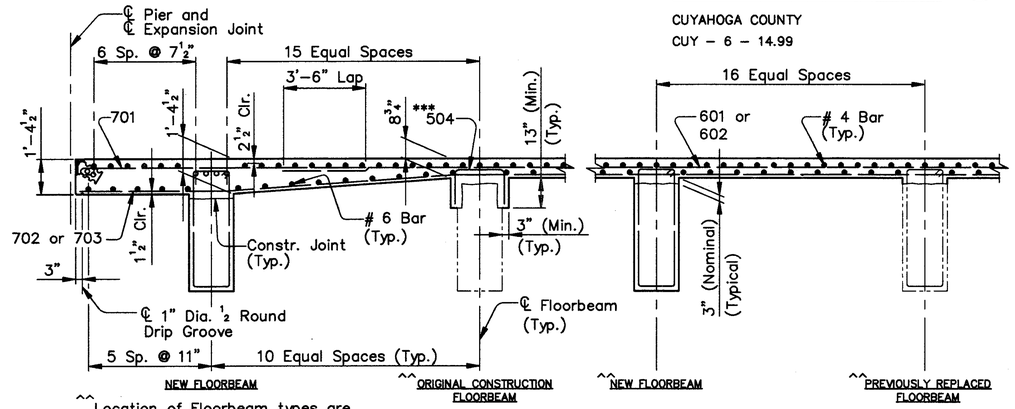

^^ Location of Floorbeam types are arbitrarily shown and may not represent actual locations.

TYPICAL LONGITUDINAL SECTION
(Transverse Reinf. in Floorbeams not shown)

*** Install 26–504 bars (to match every other longitudinal bar) at the following Original Construction Floorbeams:

SPAN 2
South Bay – Floorbeam
2, 6 thru 2, 10
and 2, 15

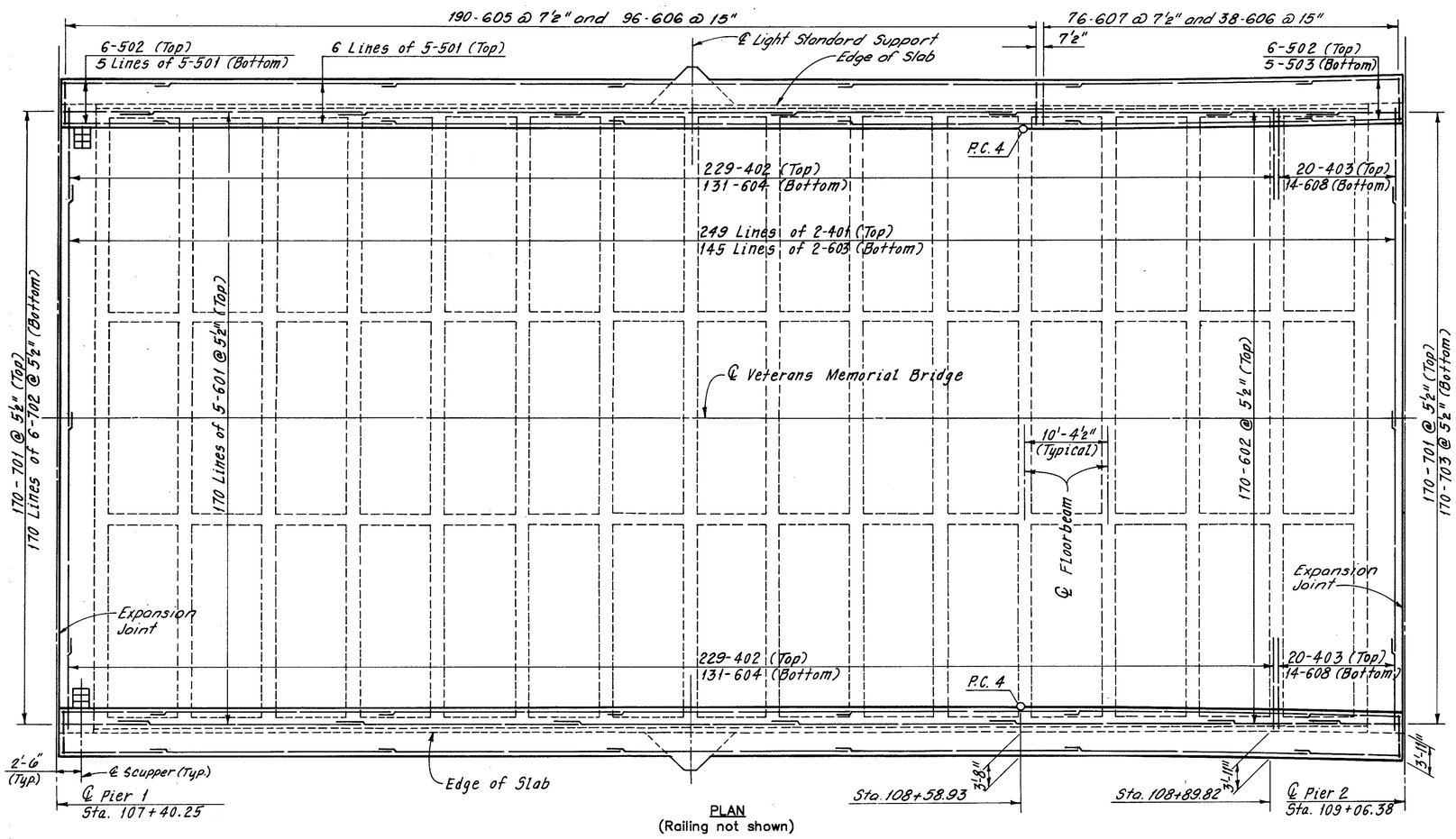

PLAN
(Railing not shown)

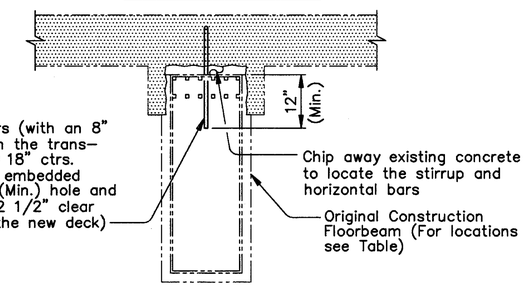

16–404 Dowel Bars (with an 8" horz. leg placed in the transverse direction) @ 18" ctrs. (The bar shall be embedded into a 1"ø x 12" (Min.) hole and the bar shall be 2 1/2" clear from the top of the new deck)

ORIGINAL CONSTRUCTION FLOORBEAM MODIFICATION DETAIL

SPAN 2
South Bay – Floorbeam
2, 15

Legend
Indicates Deck Removal

Notes:
For Member Identification and Removal Plan, see Sheet 23/270.
For Floorbeam Removal Details, see Sheet 50/270.
For Floorbeam Details, see Sheet 118/270.
For Scupper Detail, see Sheet 195/270.
For Light Standard Support Details, see Sheet 222/270.

MINIMUM SPLICE LENGTH	
BAR	LENGTH
# 4	1'–9"
# 5	2'–0"
# 6 (TRANSVERSE)	2'–5"
# 6 (LONGITUDINAL)	3'–0"
# 7	4'–8"

(Typical except as shown in Details)

ALL REINFORCING BAR MARKS SHALL BE PREFIXED AS FOLLOWS:		
SPAN 2	–	2UES

COUNTY BRIDGE NO. 84

HOWARD NEEDLES TAMMEN & BERGENDOFF
ARCHITECTS ENGINEERS PLANNERS
HNTB

UPPER DECK PLAN
SPAN 2
BR. NO. CUY – 6 – 1499
REHABILITATION OF
VETERANS MEMORIAL BRIDGE
(U.S. 6, 20, 42 & S.R. 3 OVER CUYAHOGA RIVER)
CLEVELAND CUYAHOGA COUNTY OHIO

DRAWN R.S.Y./J.L.V.	TRACED W.E.B./J.L.V.	CHECKED J.L.V./R.S.Y.	REVIEWED C.A.B.	REVISED
DATE 2/25/94	DATE 2/25/94	DATE 2/26/94	DATE 4/08/94	SHEET 196/270

\11646\CONCRETE\SPAN2.DWG

FHWA REGION	STATE	PROJECT	
5	OHIO		

330 / 412

CUYAHOGA COUNTY
CUY – 6 – 14.99

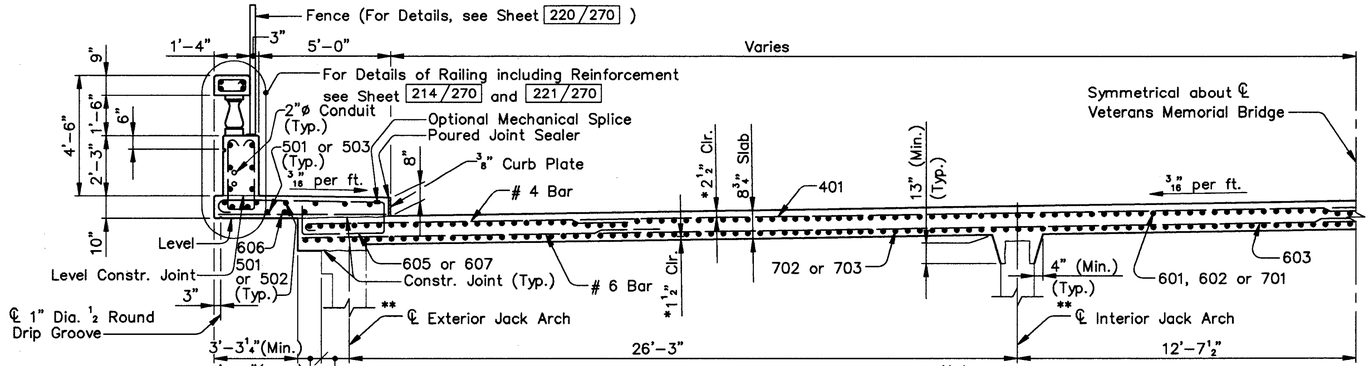

Notes:
Field cut 402 and 604 bars as required to clear the scuppers.
Field cut 401, 601, 603 and 702 Bars as required to clear the O.B.T. Manhole.

TYPICAL CROSS SECTION

Notes:
* Typical for Deck and Sidewalk Slabs.
** Original Construction Jack Arches shown.

For additional notes, see Sheet 195/270.

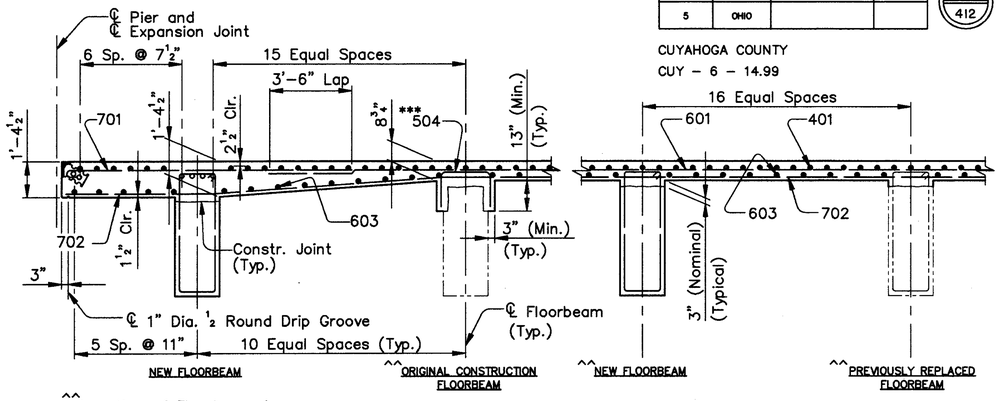

^^ Location of Floorbeam types are arbitrarily shown and may not represent actual locations.

SECTION A–A
(Transverse Reinforcement in Floorbeams not shown)

*** Install 26–504 bars (to match every other longitudinal bar) at the following Original Construction Floorbeams:

SPAN 3
South Bay – Floorbeam
3, 8 thru 3, 11
and 3, 13 thru 3, 17

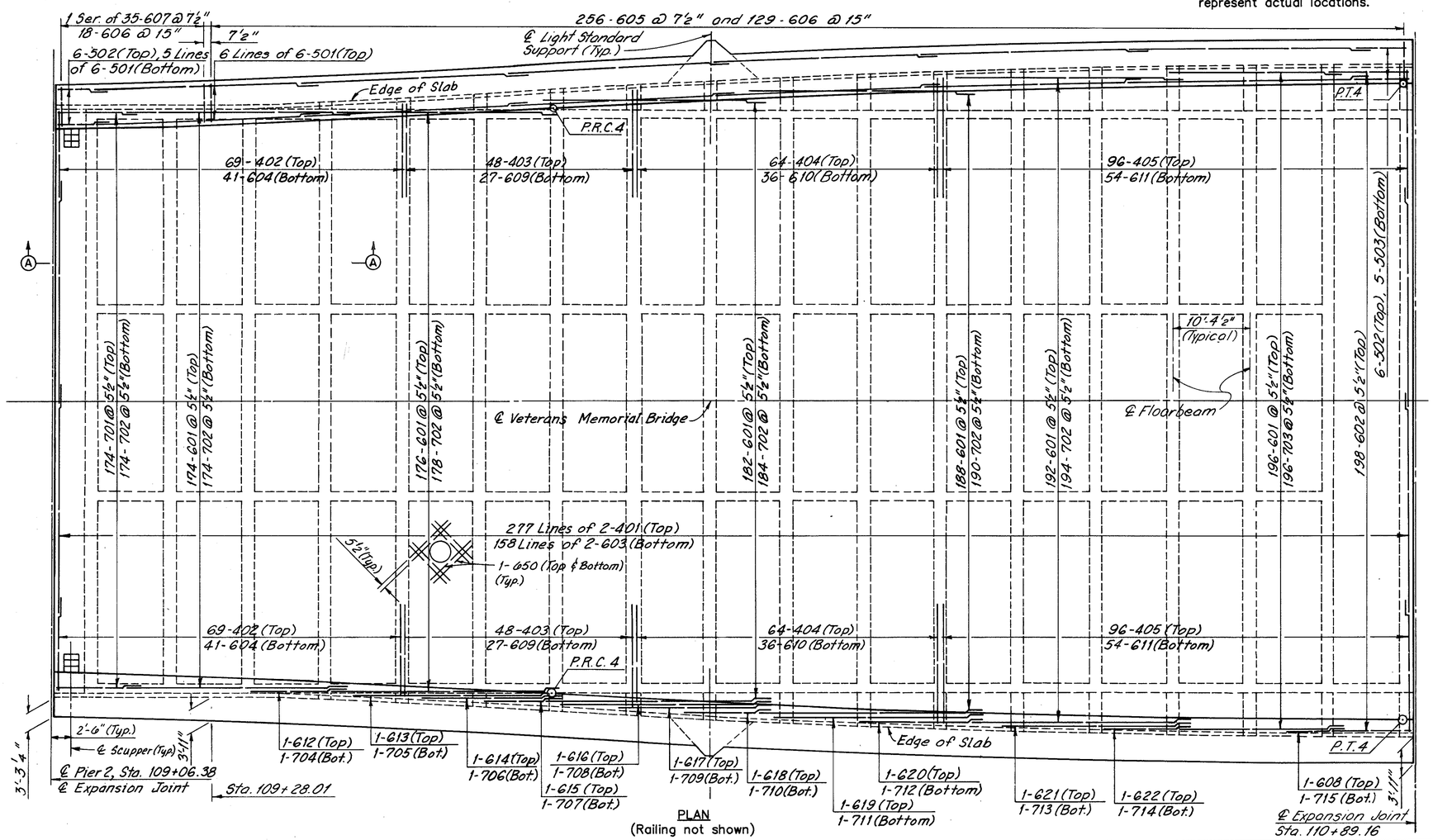

PLAN
(Railing not shown)

MINIMUM SPLICE LENGTH	
BAR	LENGTH
# 4	1'–9"
# 5	2'–0"
# 6 (TRANSVERSE)	2'–5"
# 6 (LONGITUDINAL)	3'–0"
# 7	4'–8"

(Typical except as shown in Details)

ALL REINFORCING BAR MARKS SHALL BE PREFIXED AS FOLLOWS:		
SPAN 3	–	3UES

Notes:
For Member Identification and Removal Plan, see Sheet 23/270.
For Floorbeam Removal Details, see Sheet 50/270.
For Floorbeam Details, see Sheet 119/270.
For Scupper Detail, see Sheet 195/270.
For Light Standard Support Details, see Sheet 222/270.
For O.B.T. Support Details, see Sheet 233/270.

COUNTY BRIDGE NO. 84

HOWARD NEEDLES TAMMEN & BERGENDOFF
ARCHITECTS ENGINEERS PLANNERS
HNTB

UPPER DECK PLAN
SPAN 3
BR. NO. CUY – 6 – 1499
REHABILITATION OF
VETERANS MEMORIAL BRIDGE
(U.S. 6, 20, 42 & S.R. 3 OVER CUYAHOGA RIVER)
CLEVELAND CUYAHOGA COUNTY OHIO

DRAWN	TRACED	CHECKED	REVIEWED	REVISED
R.S.Y./J.L.V.	W.E.B./J.L.V.	J.L.V./R.S.Y.	C.A.B.	
DATE 2/25/94	DATE 2/25/94	DATE 2/28/94	DATE 4/06/94	SHEET 197/270

\11646\CONCRETE\SPAN3.DWG

FHWA REGION	STATE	PROJECT	
5	OHIO		

331
412

CUYAHOGA COUNTY
CUY – 6 – 14.99

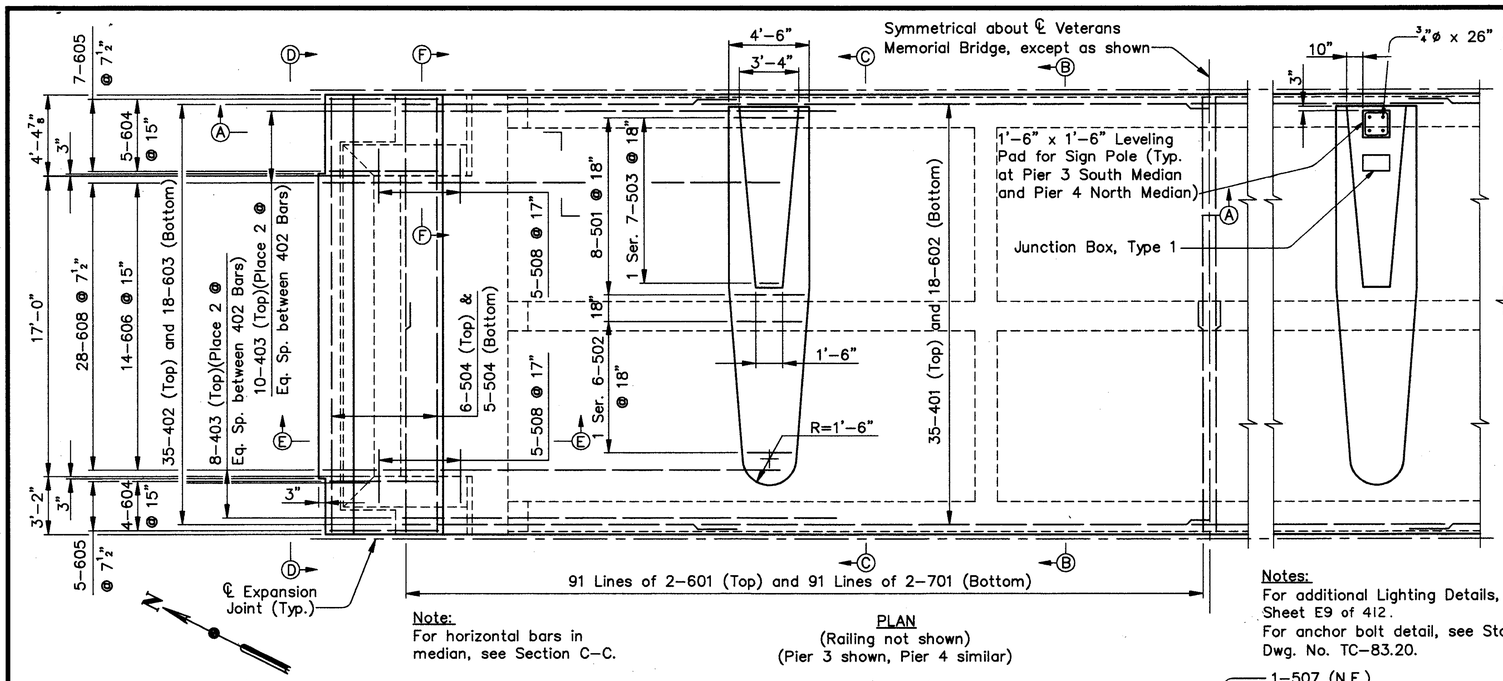

Note:
For horizontal bars in median, see Section C–C.

PLAN
(Railing not shown)
(Pier 3 shown, Pier 4 similar)

Note:
Jack Arches shall be placed monolithically with the floorbeams.

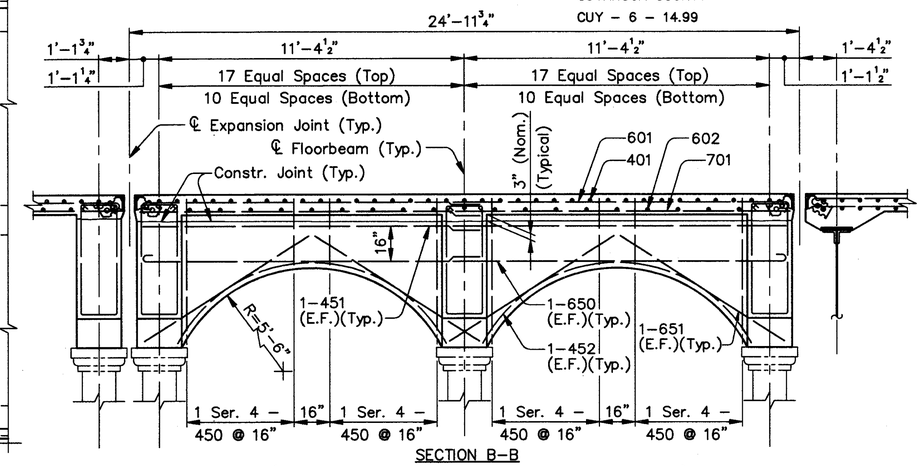

SECTION B–B
(Transverse Reinforcement in Floorbeams not shown)

Notes:
For additional Lighting Details, see Sheet E9 of 412.
For anchor bolt detail, see Std. Constr. Dwg. No. TC–83.20.

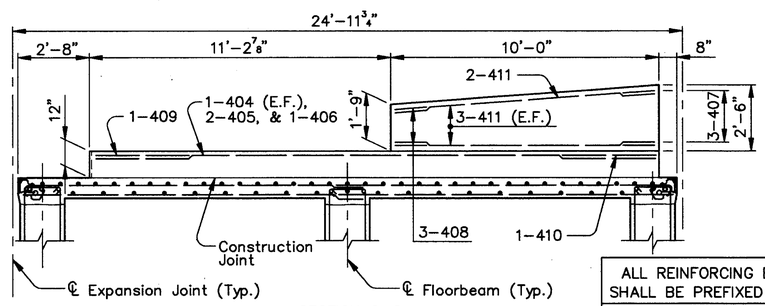

SECTION C–C
(Transverse Reinforcement in Floorbeams not shown)

ALL REINFORCING BAR MARKS SHALL BE PREFIXED AS FOLLOWS:		
PIER 3	–	P3UES
PIER 4	–	P4UES
*PIER 3–JACK ARCH	–	P3UEJ
*PIER 4–JACK ARCH	–	P4UEJ

*(Includes Bars 450 thru 452, 650 and 651)

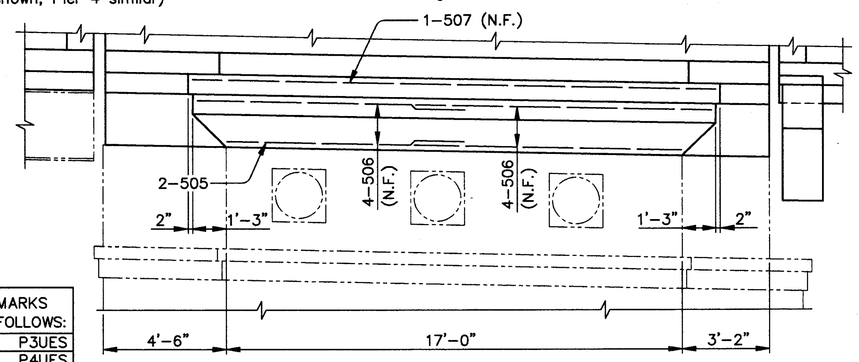

VIEW D–D

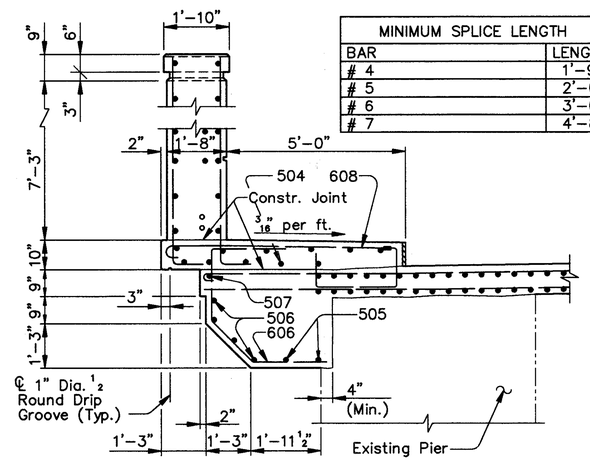

SECTION E–E
(Fence Post not shown)

MINIMUM SPLICE LENGTH	
BAR	LENGTH
# 4	1'–9"
# 5	2'–0"
# 6	3'–0"
# 7	4'–8"

Notes:
For Suggested Construction Sequence, see Sheet 41/270.
For Member Identification and Removal Plan, see Sheet 23/270.
For Floorbeam Details, see Sheet 117/270.

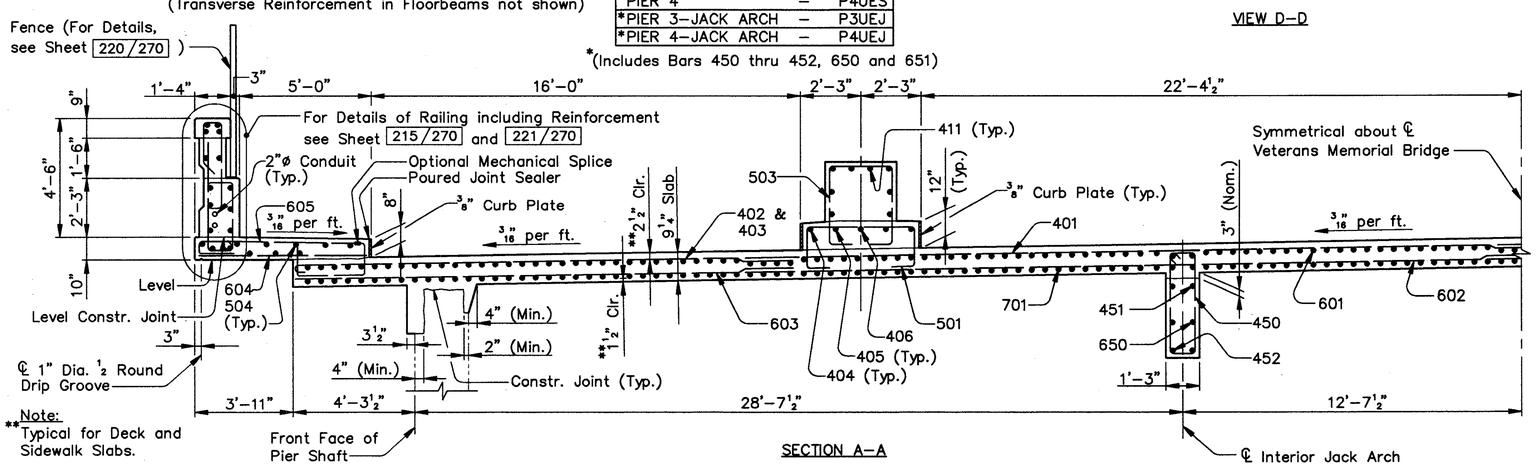

Note:
**Typical for Deck and Sidewalk Slabs.

SECTION A–A

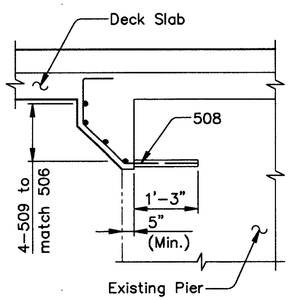

SECTION F–F
(Deck Slab and Sidewalk Reinforcement not shown)

COUNTY BRIDGE NO. 84

HOWARD NEEDLES TAMMEN & BERGENDOFF
ARCHITECTS ENGINEERS PLANNERS
HNTB

UPPER DECK PLAN
PIERS 3 AND 4
BR. NO. CUY – 6 – 1499
REHABILITATION OF
VETERANS MEMORIAL BRIDGE
(U.S. 6, 20, 42 & S.R. 3 OVER CUYAHOGA RIVER)

CLEVELAND CUYAHOGA COUNTY OHIO

DRAWN	TRACED	CHECKED	REVIEWED	REVISED
J.L.V.	J.L.V.	R.S.Y.	C.A.B.	
DATE 2/23/94	DATE 2/23/94	DATE 3/08/94	DATE 4/05/94	SHEET 198/270

\11646\CONCRETE\SPAN34P.DWG

FHWA REGION	STATE	PROJECT	
5	OHIO		

332/412

CUYAHOGA COUNTY
CUY – 6 – 14.99

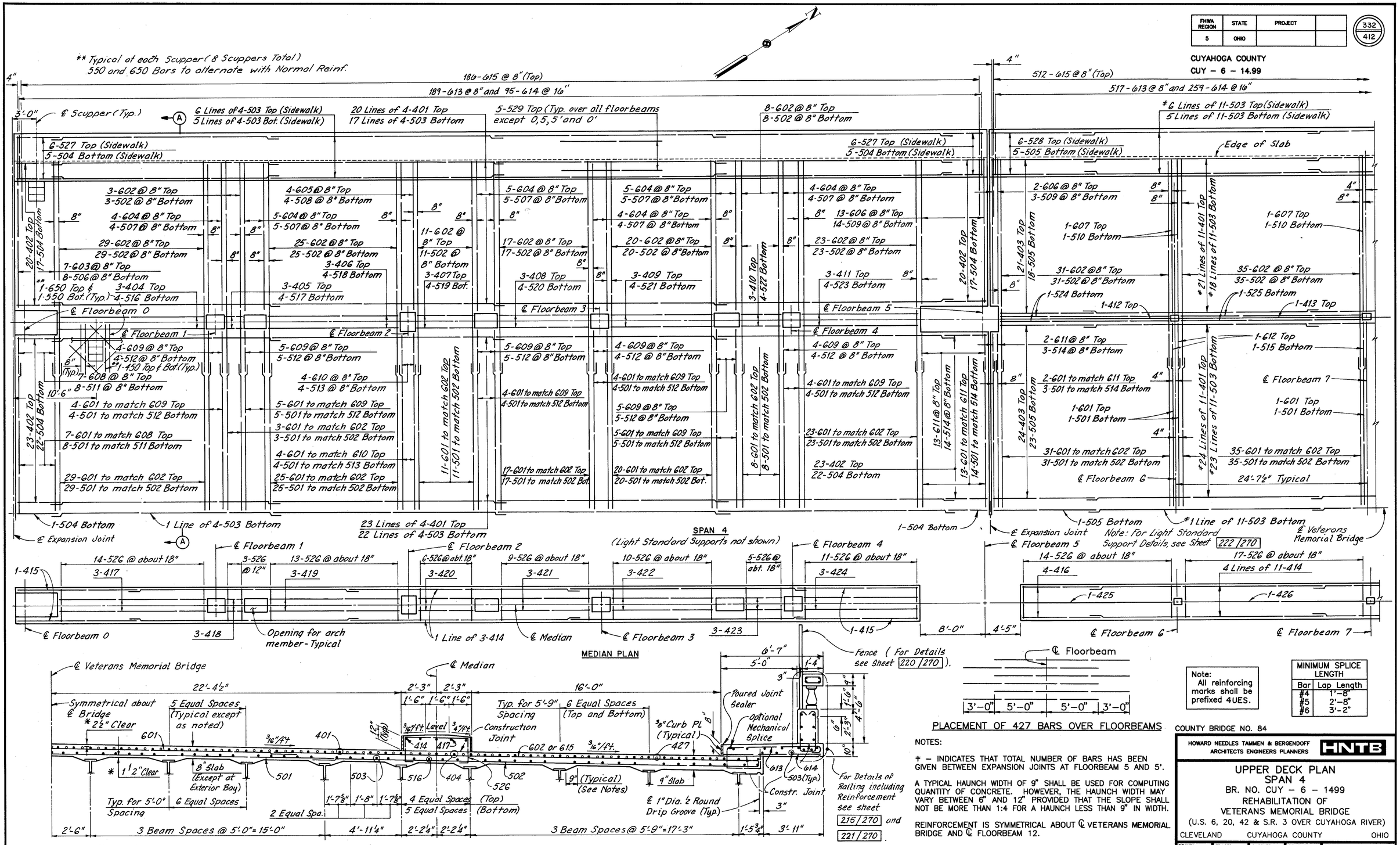

PLACEMENT OF 427 BARS OVER FLOORBEAMS

NOTES:

* – INDICATES THAT TOTAL NUMBER OF BARS HAS BEEN GIVEN BETWEEN EXPANSION JOINTS AT FLOORBEAM 5 AND 5'.

A TYPICAL HAUNCH WIDTH OF 9" SHALL BE USED FOR COMPUTING QUANTITY OF CONCRETE. HOWEVER, THE HAUNCH WIDTH MAY VARY BETWEEN 6" AND 12" PROVIDED THAT THE SLOPE SHALL NOT BE MORE THAN 1:4 FOR A HAUNCH LESS THAN 9" IN WIDTH.

REINFORCEMENT IS SYMMETRICAL ABOUT ℄ VETERANS MEMORIAL BRIDGE AND ℄ FLOORBEAM 12.

REINFORCEMENT BETWEEN FLOORBEAM 6 AND 7 IS TYPICAL BETWEEN FLOORBEAMS FROM FLOORBEAMS 6 THRU FLOORBEAM 6'.

Note: All reinforcing marks shall be prefixed 4UES.

MINIMUM SPLICE LENGTH	
Bar	Lap Length
#4	1'-8"
#5	2'-8"
#6	3'-2"

COUNTY BRIDGE NO. 84

HOWARD NEEDLES TAMMEN & BERGENDOFF
ARCHITECTS ENGINEERS PLANNERS
HNTB

UPPER DECK PLAN
SPAN 4
BR. NO. CUY – 6 – 1499
REHABILITATION OF
VETERANS MEMORIAL BRIDGE
(U.S. 6, 20, 42 & S.R. 3 OVER CUYAHOGA RIVER)
CLEVELAND CUYAHOGA COUNTY OHIO

DRAWN C.K.B.	TRACED J.T.	CHECKED R.S.Y.	REVIEWED C.A.B.	REVISED
DATE 10/2/92	DATE 10/4/92	DATE 11/10/92	DATE 4/7/94	SHEET 199/270

FHWA REGION	STATE	PROJECT	
5	OHIO		

333 / 412

CUYAHOGA COUNTY
CUY – 6 – 14.99

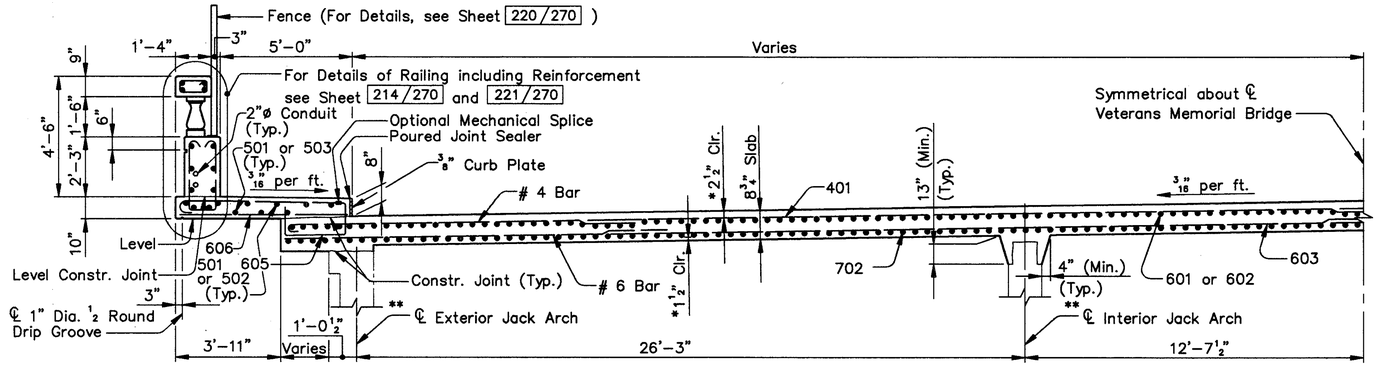

TYPICAL CROSS SECTION

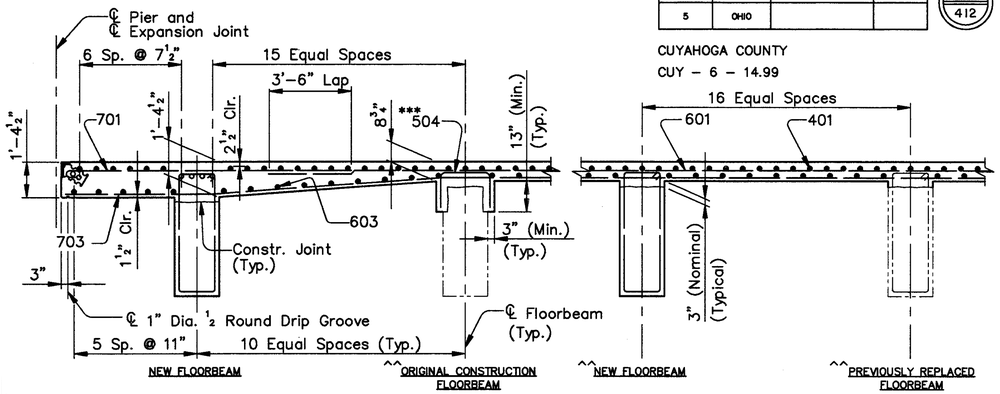

SECTION A–A
(Transverse Reinforcement in Floorbeams not shown)

Notes:
* Typical for Deck and Sidewalk Slabs.
** Original Construction Jack Arches shown.
For additional notes, see Sheet 195/270.

^^ Location of Floorbeam types are arbitrarily shown and may not represent actual locations.

*** Install 26–504 bars (to match every other longitudinal bar) at the following Original Construction Floorbeams:

SPAN 5
South Bay – Floorbeam
5, 4 thru 5, 12

Note:
Field cut 405 and 611 bars as required to clear the scuppers.

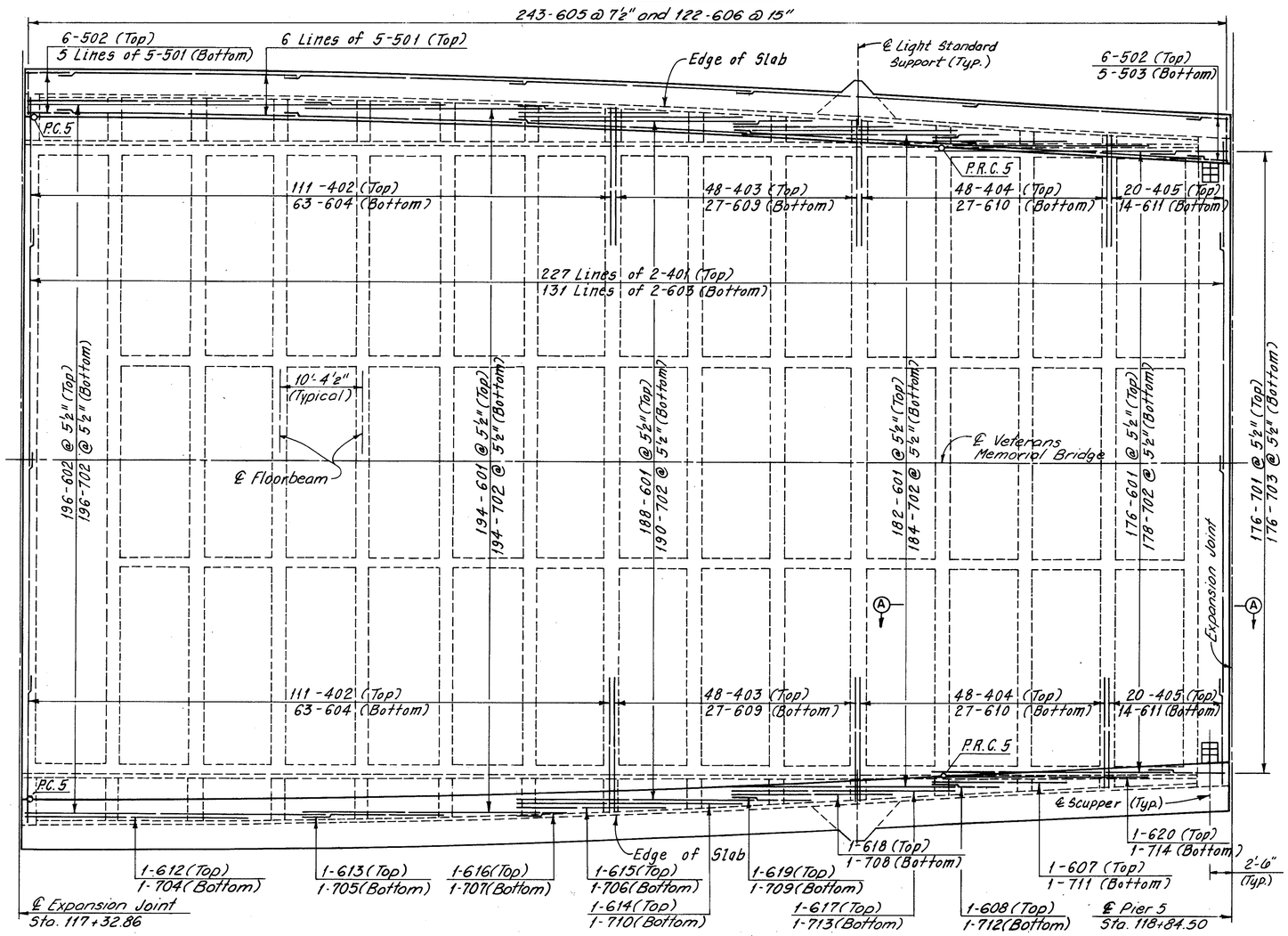

PLAN
(Railing not shown)

MINIMUM SPLICE LENGTH	
BAR	LENGTH
# 4	1'–9"
# 5	2'–0"
# 6 (TRANSVERSE)	2'–5"
# 6 (LONGITUDINAL)	3'–0"
# 7	4'–8"

(Typical except as shown in Details)

ALL REINFORCING BAR MARKS SHALL BE PREFIXED AS FOLLOWS:		
SPAN 5	–	5UES

Notes:
For Member Identification and Removal Plan, see Sheet 23/270.
For Floorbeam Removal Details, see Sheet 50/270.
For Floorbeam Details, see Sheet 119/270.
For Scupper Detail, see Sheet 195/270.
For Light Standard Support Details, see Sheet 222/270.

COUNTY BRIDGE NO. 84

HOWARD NEEDLES TAMMEN & BERGENDOFF
ARCHITECTS ENGINEERS PLANNERS
HNTB

UPPER DECK PLAN
SPAN 5
BR. NO. CUY – 6 – 1499
REHABILITATION OF
VETERANS MEMORIAL BRIDGE
(U.S. 6, 20, 42 & S.R. 3 OVER CUYAHOGA RIVER)
CLEVELAND CUYAHOGA COUNTY OHIO

DRAWN R.S.Y./J.L.V.	TRACED W.E.B./J.L.V.	CHECKED J.L.V./R.S.Y.	REVIEWED C.A.B.	REVISED
DATE 2/28/94	DATE 2/28/94	DATE 3/01/94	DATE 4/06/94	SHEET 200/270

\11646\CONCRETE\SPAN5.DWG

FHWA REGION	STATE	PROJECT	
5	OHIO		

334/412

CUYAHOGA COUNTY
CUY – 6 – 14.99

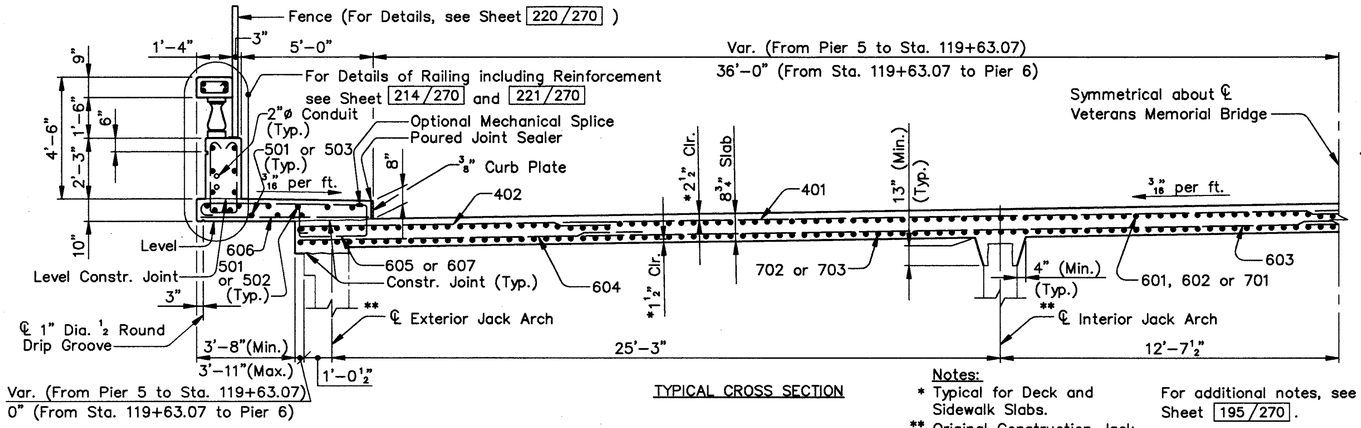

TYPICAL CROSS SECTION

Notes:
* Typical for Deck and Sidewalk Slabs.
** Original Construction Jack Arches shown.

For additional notes, see Sheet 195/270.

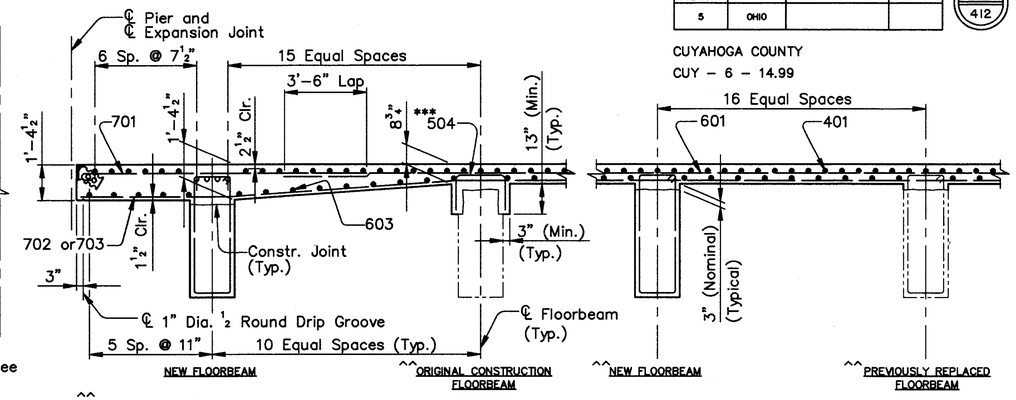

^^ Location of Floorbeam types are arbitrarily shown and may not represent actual locations.

TYPICAL LONGITUDINAL SECTION
(Transverse Reinforcement in Floorbeams not shown)

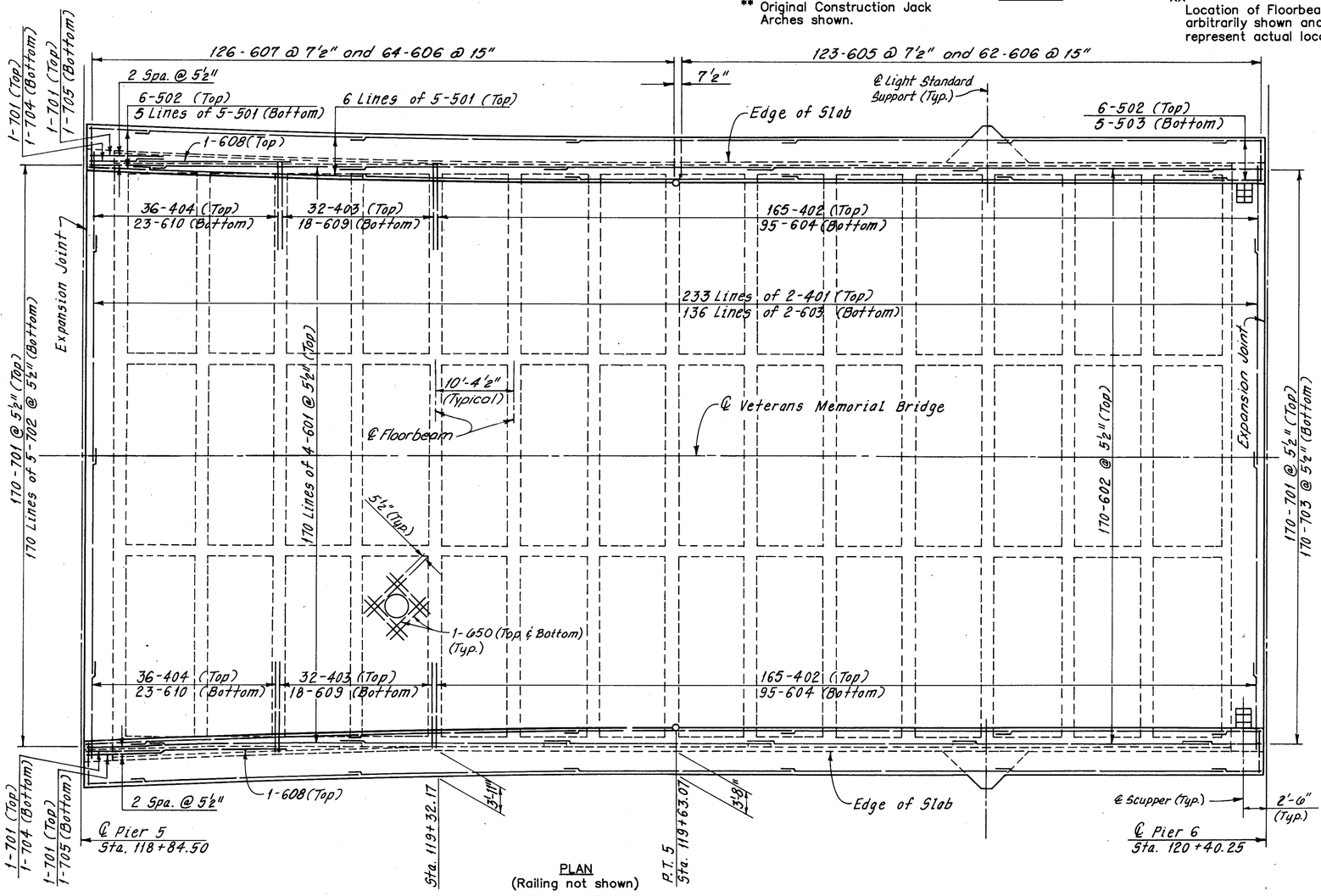

PLAN
(Railing not shown)

N

*** Install 26–504 bars (to match every other longitudinal bar) at the following Original Construction Floorbeams:

SPAN 6
South Bay – Floorbeam
6, 3 thru 6, 11
and 6, 14

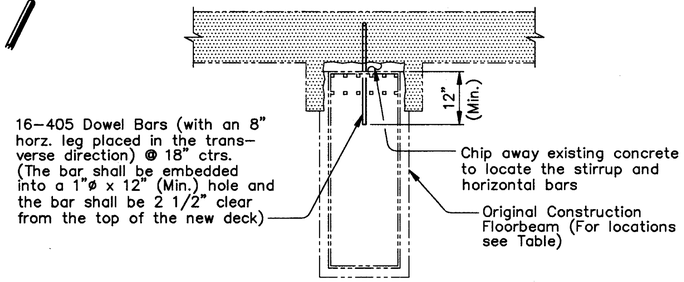

ORIGINAL CONSTRUCTION FLOORBEAM
MODIFICATION DETAIL

SPAN 6
South Bay – Floorbeam
6, 14

Legend
Indicates Deck Removal

Notes:
Field cut 402 and 604 bars as required to clear the scuppers.
Field cut 401, 601, 603 and 702 bars as required to clear the O.B.T. Manhole.

MINIMUM SPLICE LENGTH	
BAR	LENGTH
# 4	1'–9"
# 5	2'–0"
# 6 (TRANSVERSE)	2'–5"
# 6 (LONGITUDINAL)	3'–0"
# 7	4'–8"

(Typical except as shown in Details)

ALL REINFORCING BAR MARKS SHALL BE PREFIXED AS FOLLOWS:		
SPAN 6	–	6UES

Notes:
For Member Identification and Removal Plan, see Sheet 23/270.
For Floorbeam Removal Details, see Sheet 50/270.
For Floorbeam Details, see Sheet 118/270.
For Scupper Detail, see Sheet 195/270.
For O.B.T. Support Details, see Sheet 233/270.
For Light Standard Support Details, see Sheet 222/270.

COUNTY BRIDGE NO. 84

HOWARD NEEDLES TAMMEN & BERGENDOFF
ARCHITECTS ENGINEERS PLANNERS
HNTB

UPPER DECK PLAN
SPAN 6
BR. NO. CUY – 6 – 1499
REHABILITATION OF
VETERANS MEMORIAL BRIDGE
(U.S. 6, 20, 42 & S.R. 3 OVER CUYAHOGA RIVER)
CLEVELAND CUYAHOGA COUNTY OHIO

DRAWN R.S.Y./J.L.V.	TRACED W.E.B./J.L.V.	CHECKED J.L.V./R.S.Y.	REVIEWED C.A.B.	REVISED
DATE 2/24/94	DATE 2/24/94	DATE 2/25/94	DATE 4/07/94	SHEET 201/270

\11646\CONCRETE\SPAN6.DWG

FHWA REGION	STATE	PROJECT	
5	OHIO		

335/412

CUYAHOGA COUNTY
CUY – 6 – 14.99

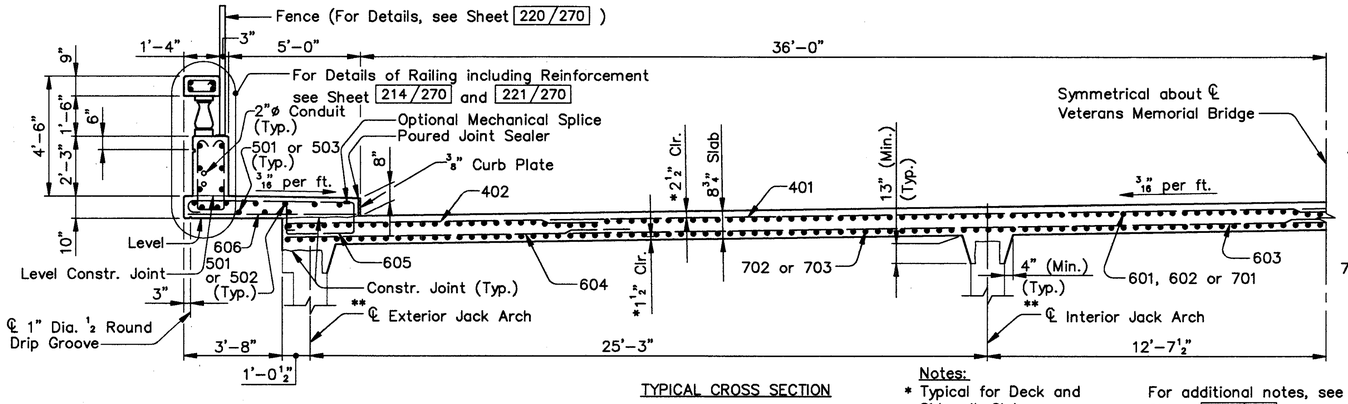

TYPICAL CROSS SECTION

Notes:
* Typical for Deck and Sidewalk Slabs.
** Original Construction Jack Arches shown.

For additional notes, see Sheet 195/270.

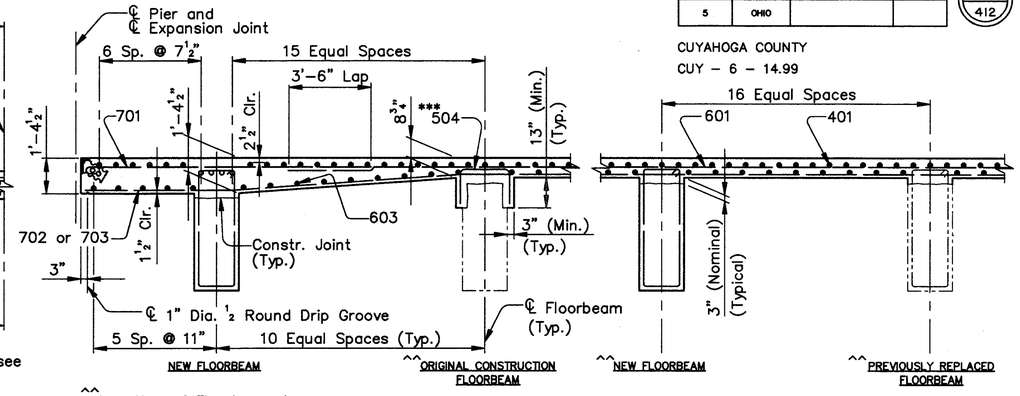

^^ Location of Floorbeam types are arbitrarily shown and may not represent actual locations.

TYPICAL LONGITUDINAL SECTION
(Transverse Reinforcement in Floorbeams not shown)

*** Install 26–504 bars (to match every other longitudinal bar) at the following Original Construction Floorbeams:

SPAN 7
South Bay – Floorbeam
7, 2 and 7, 3
7, 6 thru 7, 8
7, 10 thru 7, 13

SPAN 8
South Bay – Floorbeam
8, 2
8, 4 thru 8, 14

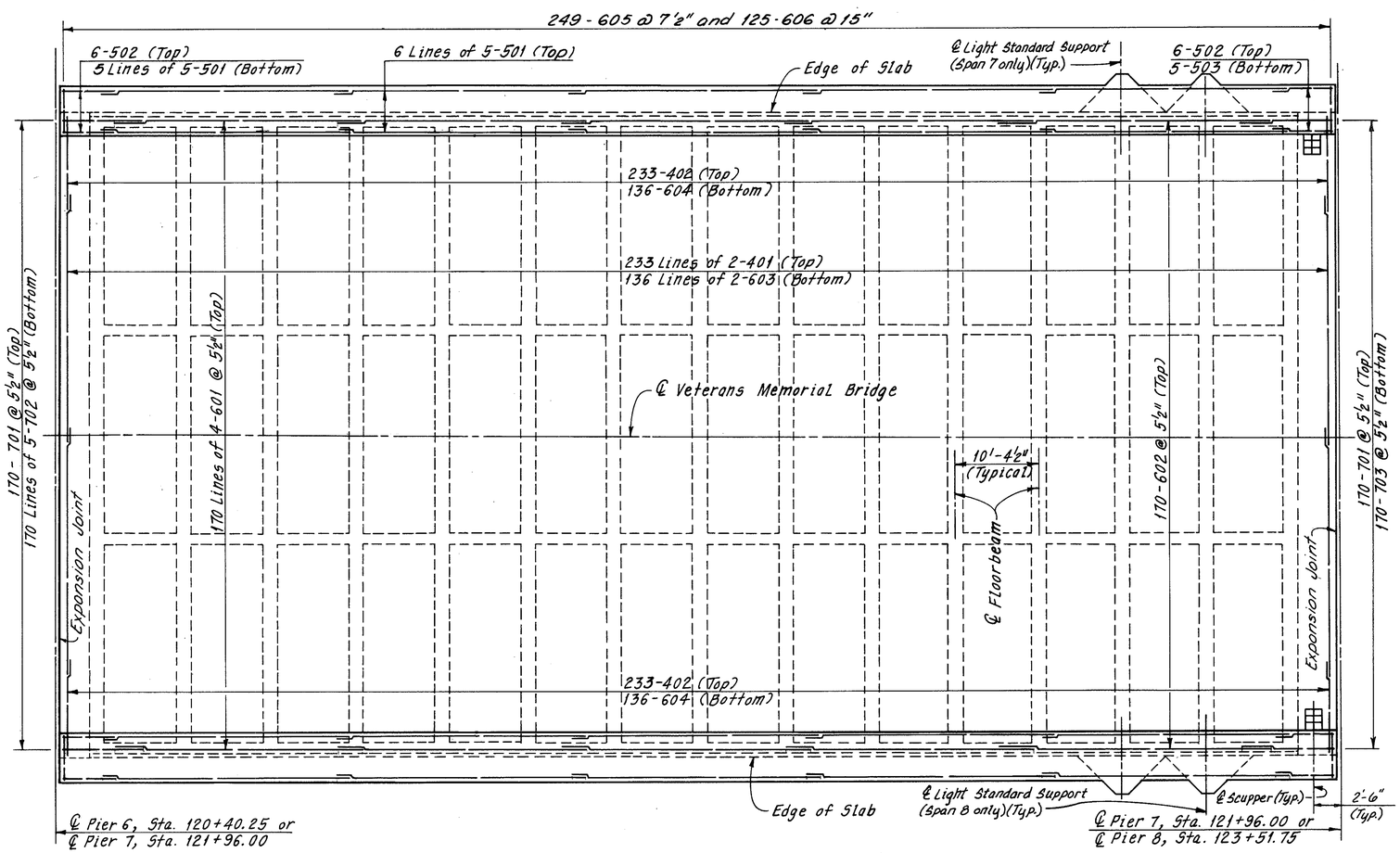

PLAN
(Railing not shown)

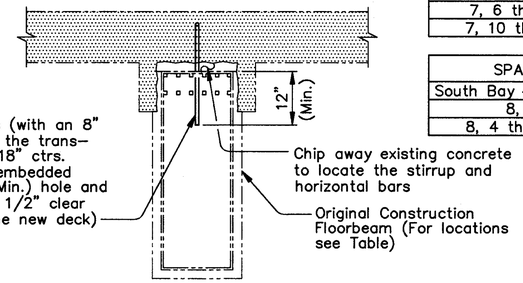

ORIGINAL CONSTRUCTION FLOORBEAM MODIFICATION DETAIL

SPAN 7
South Bay – Floorbeam
7, 2

SPAN 8
South Bay – Floorbeam
8, 2 and 8, 14

Legend
Indicates Deck Removal

Note:
Field cut 402 and 604 bars as required to clear the scuppers.

MINIMUM SPLICE LENGTH	
BAR	LENGTH
# 4	1'–9"
# 5	2'–0"
# 6 (TRANSVERSE)	2'–5"
# 6 (LONGITUDINAL)	3'–0"
# 7	4'–8"

(Typical except as shown in Details)

ALL REINFORCING BAR MARKS SHALL BE PREFIXED AS FOLLOWS:		
SPAN 7	–	7UES
SPAN 8	–	8UES

Notes:
For Member Identification and Removal Plan, see Sheet 23/270.
For Floorbeam Removal Details, see Sheet 50/270.
For Floorbeam Details, see Sheet 118/270.
For Scupper Detail, see Sheet 195/270.
For Light Standard Support Details, see Sheet 222/270.

COUNTY BRIDGE NO. 84

HOWARD NEEDLES TAMMEN & BERGENDOFF
ARCHITECTS ENGINEERS PLANNERS
HNTB

UPPER DECK PLAN
SPANS 7 AND 8
BR. NO. CUY – 6 – 1499
REHABILITATION OF
VETERANS MEMORIAL BRIDGE
(U.S. 6, 20, 42 & S.R. 3 OVER CUYAHOGA RIVER)
CLEVELAND CUYAHOGA COUNTY OHIO

DRAWN	TRACED	CHECKED	REVIEWED	REVISED
R.S.Y./J.L.V.	W.E.B./J.L.V.	J.L.V./R.S.Y.	C.A.B.	
DATE 2/24/94	DATE 2/24/94	DATE 2/25/94	DATE 4/07/94	SHEET 202/270

\11646\CONCRETE\SPAN78.DWG

FHWA REGION	STATE	PROJECT	
5	OHIO		

336 / 412

CUYAHOGA COUNTY
CUY – 6 – 14.99

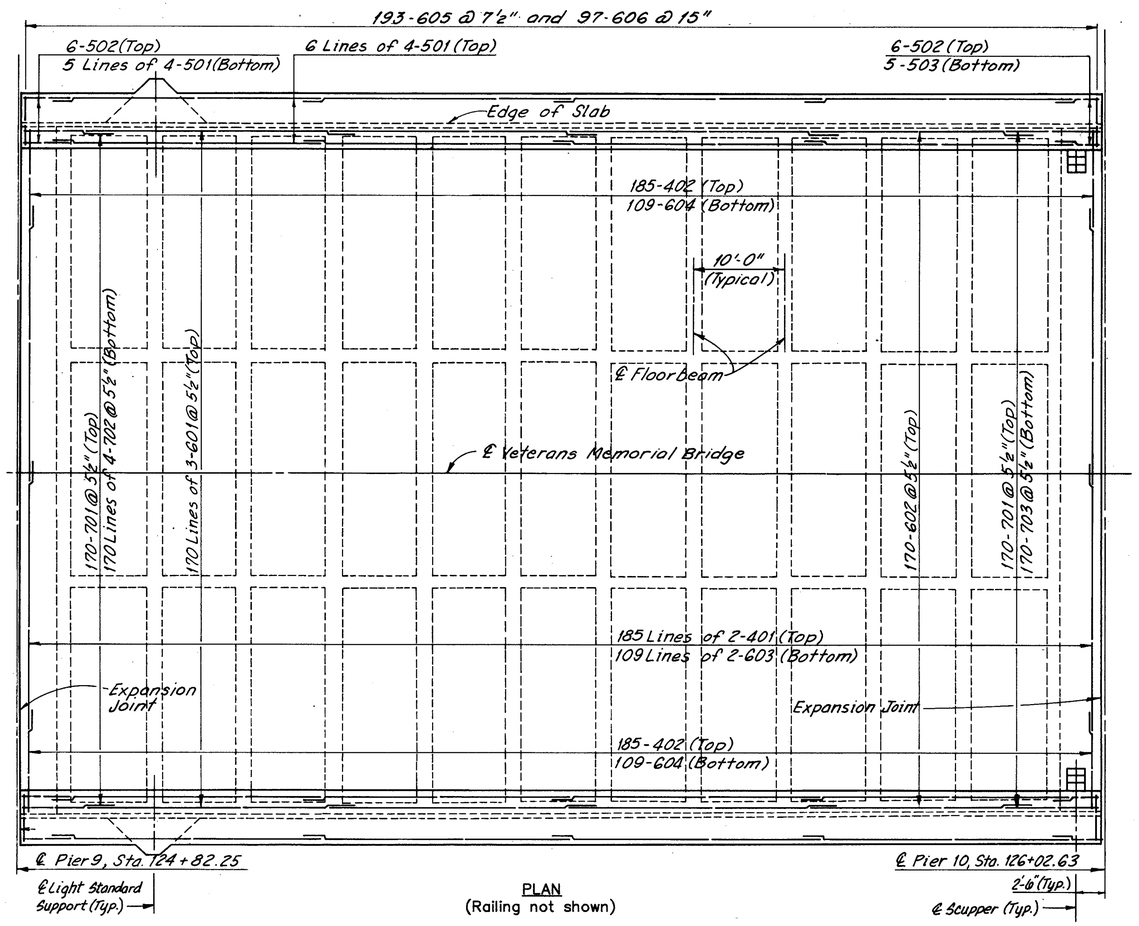

PLAN
(Railing not shown)

Note:
Field cut 402 and 604 bars as required to clear the scuppers.

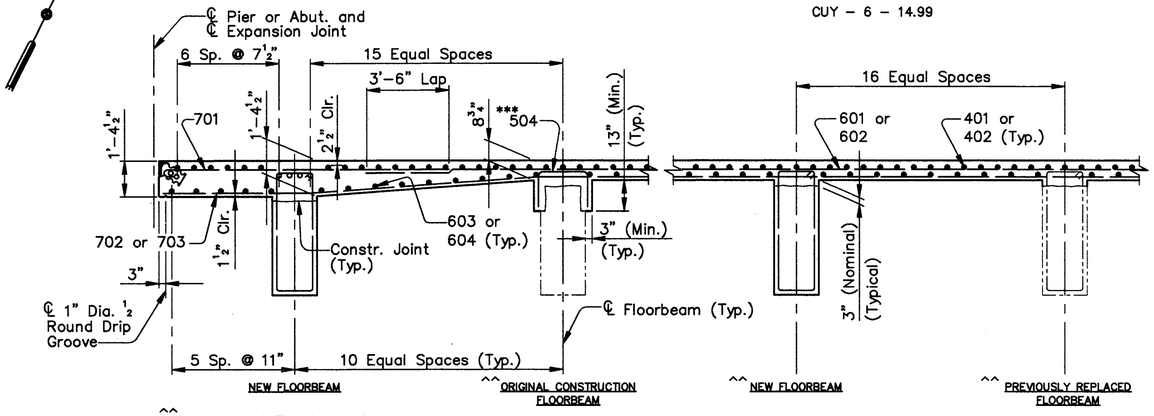

^^ Location of Floorbeam types are arbitrarily shown and may not represent actual locations.

TYPICAL LONGITUDINAL SECTION
(Transverse Reinf. in Floorbeams not shown)

*** Install 26–504 bars (to match every other longitudinal bar) at the following Original Construction Floorbeams:

SPAN 10
South Bay – Floorbeam
10, 2 thru 10, 11

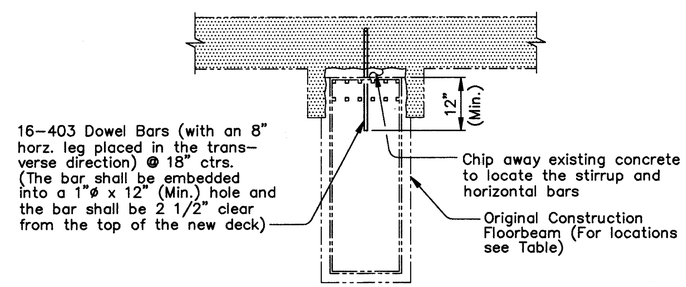

ORIGINAL CONSTRUCTION FLOORBEAM
MODIFICATION DETAIL

SPAN 10
South Bay – Floorbeam
10, 2 and 10, 11

Legend
Indicates Deck Removal

Notes:
For Member Identification and Removal Plan, see Sheet 23/270.
For Floorbeam Removal Details, see Sheet 50/270.
For Floorbeam Details, see Sheet 117/270.
For Scupper Detail, see Sheet 195/270.
For Light Support Details, see Sheet 222/270.

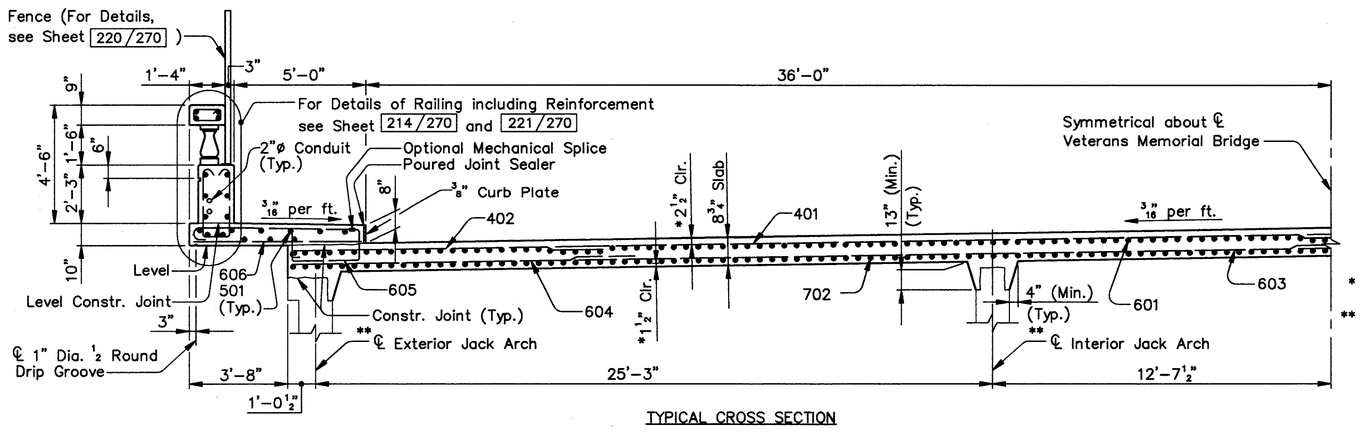

TYPICAL CROSS SECTION

Notes:
* Typical for Deck and Sidewalk Slabs.
** Original Construction Jack Arches shown.
For additional notes, see Sheet 195/270.

MINIMUM SPLICE LENGTH	
BAR	LENGTH
# 4	1'–9"
# 5	2'–0"
# 6 (TRANSVERSE)	2'–5"
# 6 (LONGITUDINAL)	3'–0"
# 7	4'–8"

(Typical except as shown in Details)

ALL REINFORCING BAR MARKS SHALL BE PREFIXED AS FOLLOWS:		
SPAN 10	–	10UES

COUNTY BRIDGE NO. 84

HOWARD NEEDLES TAMMEN & BERGENDOFF
ARCHITECTS ENGINEERS PLANNERS
HNTB

UPPER DECK PLAN
SPAN 10
BR. NO. CUY – 6 – 1499
REHABILITATION OF
VETERANS MEMORIAL BRIDGE
(U.S. 6, 20, 42 & S.R. 3 OVER CUYAHOGA RIVER)
CLEVELAND CUYAHOGA COUNTY OHIO

DRAWN	TRACED	CHECKED	REVIEWED	REVISED
R.S.Y./J.L.V.	R.S.Y./J.L.V.	J.L.V./R.S.Y.	C.A.B.	
DATE 2/23/94	DATE 2/23/94	DATE 2/24/94	DATE 4/07/94	SHEET 203/270

\11646\CONCRETE\SPAN10.DWG

FHWA REGION	STATE	PROJECT	
5	OHIO		

337/412

CUYAHOGA COUNTY
CUY – 6 – 14.99

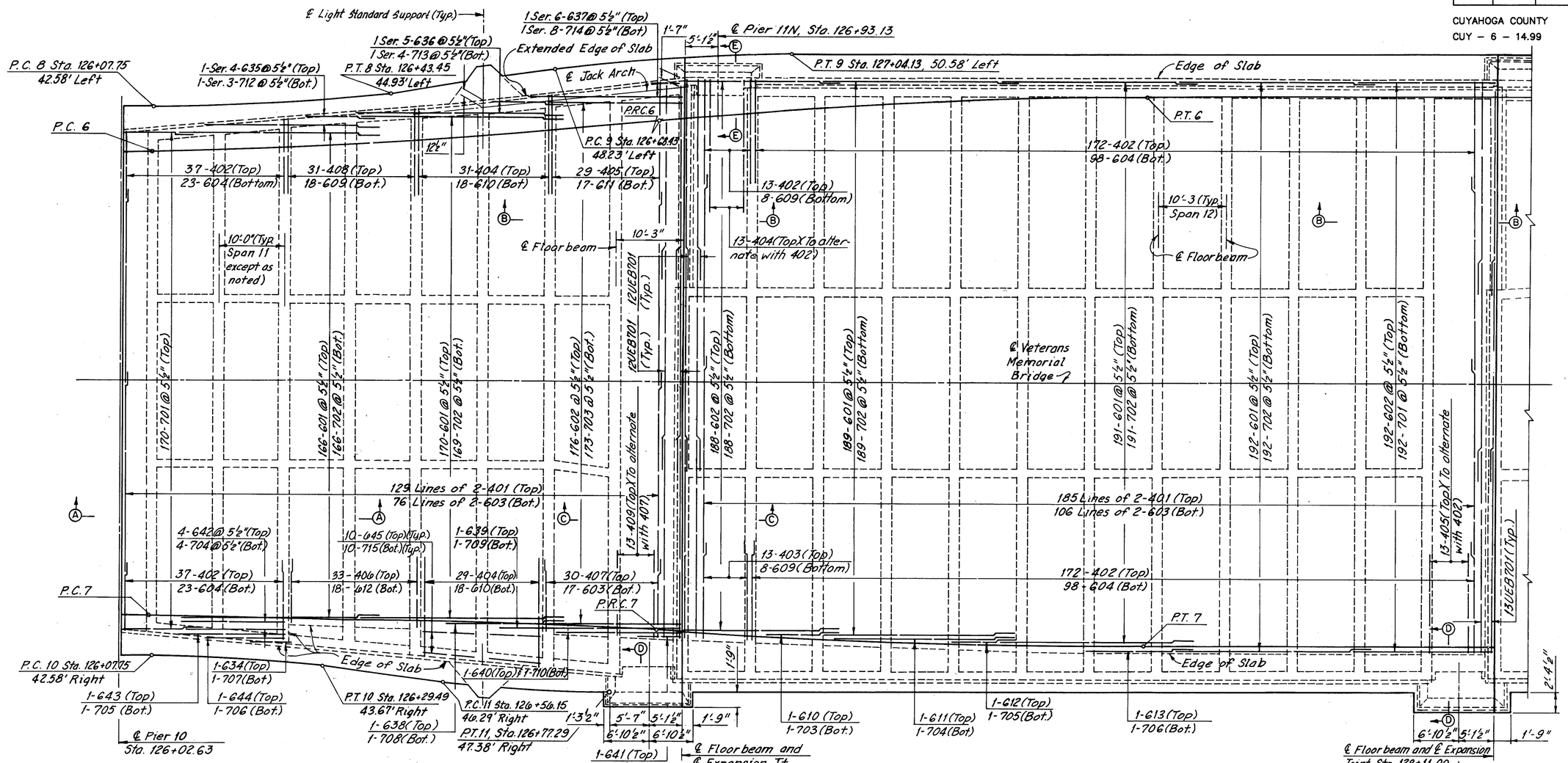

Note:
Remove South Exterior Jack Arch as required to place Deck Slab Extension for Light Standard Support.

PLAN – SPAN 11
(Railing not shown)

PLAN – SPAN 12
(Railing not shown)

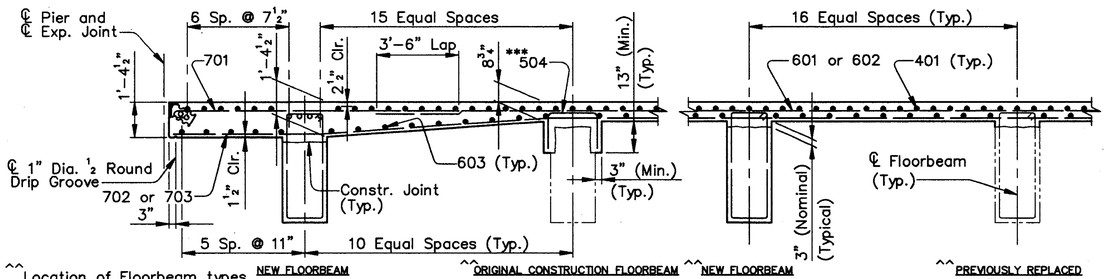

^^ Location of Floorbeam types are arbitrarily shown and may not represent actual locations.

SECTION A–A
(Transverse Reinforcement in Floorbeams not shown)

*** Install 1–504 bar to match every other longitudinal bar at the following Original Construction Floorbeams:

SPAN 11
North Bay – Floorbeam
11, 3 and 11, 7
South Bay – Floorbeam
11, 2 thru 11, 8

SPAN 12
North Bay – Floorbeam
12, 2 thru 12, 12
South Bay – Floorbeam
12, 2 thru 12, 12

ALL REINFORCING BAR MARKS SHALL BE PREFIXED AS FOLLOWS:		
SPAN 11	–	11UES
SPAN 12	–	12UES

MINIMUM SPLICE LENGTH	
BAR	LENGTH
# 4	1'–9"
# 5	2'–0"
# 6 (TRANSVERSE)	2'–5"
# 6 (LONGITUDINAL)	3'–0"
# 7	4'–8"

(Typical except as shown in Details)

Notes:

For Typical Cross Section, see Sheet 206/270.

For Suggested Construction Sequence, see Sheet 120/270.

For Sidewalk Details, see Sheet 206/270.

For Sections B–B thru E–E, see Sheet 205/270.

For Member Identification and Removal Plan, see Sheet 23/270.

For Floorbeam Removal Details, see Sheet 50/270.

For Floorbeam Details, see Sheets 117/270 and 120/270.

For Light Standard Support Details, see Sheet 222/270.

COUNTY BRIDGE NO. 84

HOWARD NEEDLES TAMMEN & BERGENDOFF
ARCHITECTS ENGINEERS PLANNERS
HNTB

UPPER DECK PLAN
SPANS 11 AND 12
BR. NO. CUY – 6 – 1499
REHABILITATION OF
VETERANS MEMORIAL BRIDGE
(U.S. 6, 20, 42 & S.R. 3 OVER CUYAHOGA RIVER)
CLEVELAND CUYAHOGA COUNTY OHIO

DRAWN R.S.Y./J.L.V.	TRACED W.E.B./J.L.V.	CHECKED J.L.V./R.S.Y.	REVIEWED C.A.B.	REVISED
DATE 3/16/94	DATE 3/16/94	DATE 3/17/94	DATE 4/07/94	SHEET 204/270

\11646\CONCRETE\SPAN1112.DWG

FHWA REGION	STATE	PROJECT	
5	OHIO		

338/412

CUYAHOGA COUNTY
CUY – 6 – 14.99

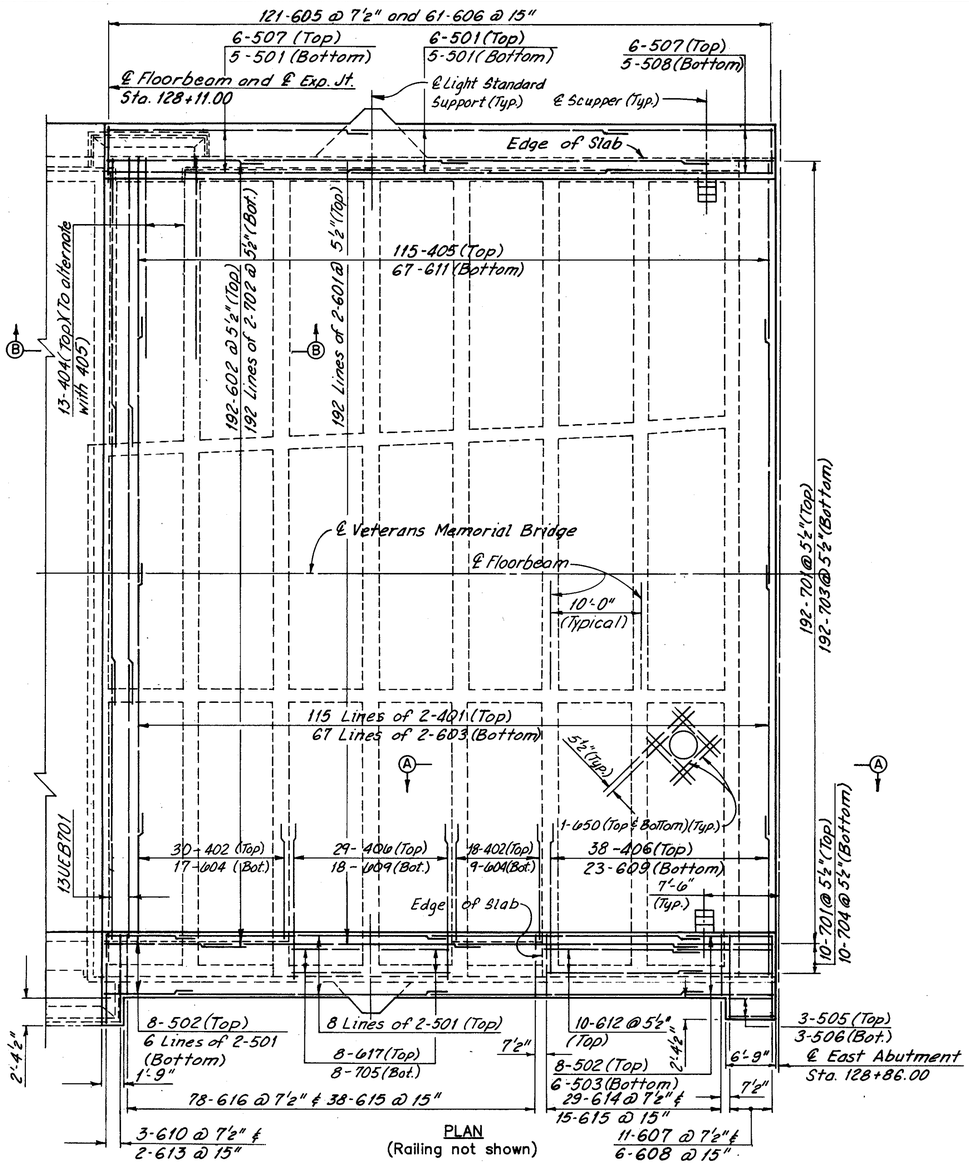

PLAN
(Railing not shown)

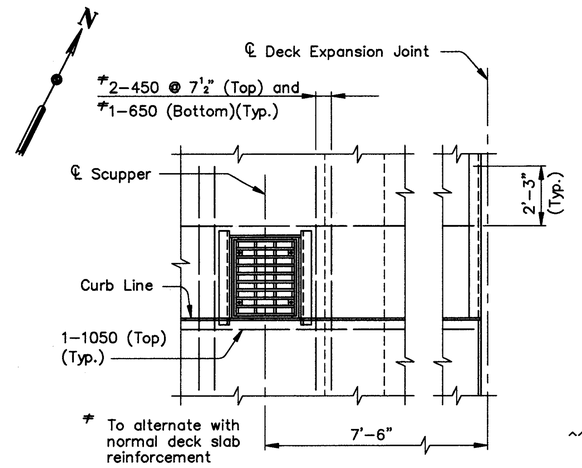

SCUPPER DETAIL

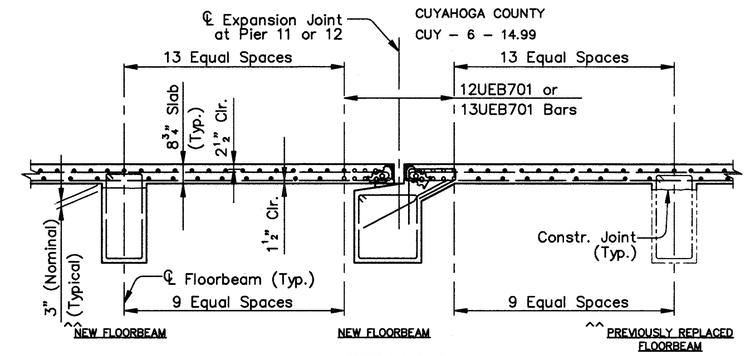

SECTION C–C
(Transverse Reinforcement in Floorbeams not shown)

Notes:
^^Location of Floorbeam types are arbitrarily shown and may not represent actual locations.
For additional details, see Section A–A, Sheet 204/270.

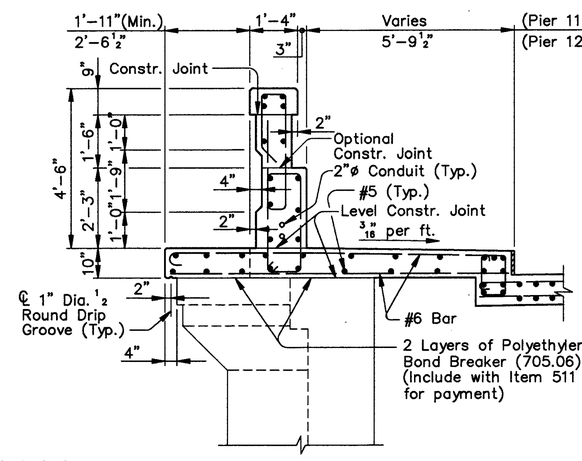

SECTION D–D
(Pier 12S shown, Pier 11S similar)
(Fence Post not shown)

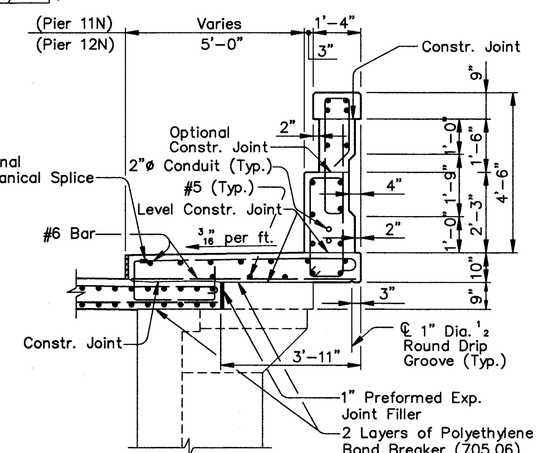

SECTION E–E
(Pier 12N shown, Pier 11N similar)
(Fence Post not shown)

Notes:
Remove South Exterior Jack Arch as required to place Deck Slab Extension at the Light Standard Support and at the East Abutment.
Field cut 405, 406, 609, 611, 701 and 703 bars as required to clear the scuppers.
Field cut 401, 603, 701, and 703 bars as required to clear the O.B.T. Manhole.

Note:
For O.B.T. Support Details, see, Sheet 233/270.
For Light Standard Support Details, see Sheet 222/270.

Notes:
For Suggested Construction Sequence, see Sheet 120/270.
For Member Identification and Removal Plan, see Sheet 23/270.
For Floorbeam Details, see Sheets 117/270 and 120/270.

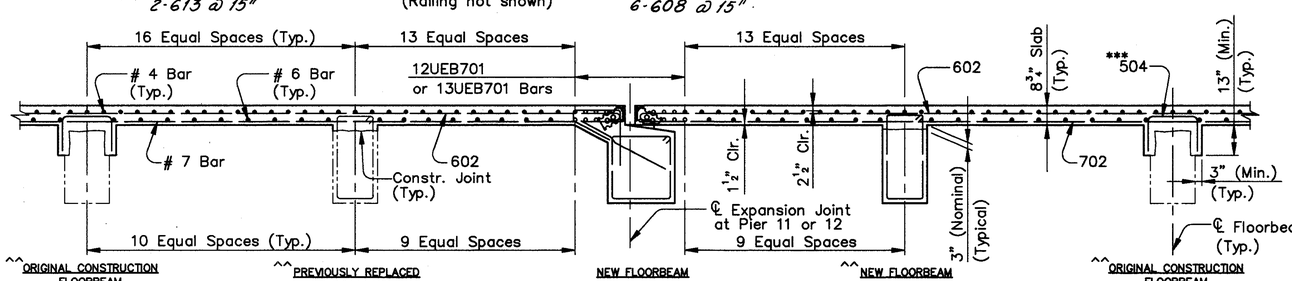

SECTION B–B
(Transverse Reinforcement in Floorbeams not shown)

*** Install 21–504 bars (to match every other longitudinal bar) at the following Original Construction Floorbeams:

SPAN 13
North Bay – Floorbeam
13, 4 thru 13, 7
South Bay – Floorbeam
13, 5 thru 13, 7

^^ Location of Floorbeam types are arbitrarily shown and may not represent actual locations.

MINIMUM SPLICE LENGTH	
BAR	LENGTH
# 4	1'–9"
# 5	2'–0"
# 6 (TRANSVERSE)	2'–5"
# 6 (LONGITUDINAL)	3'–0"
# 7	4'–8"

(Typical except as shown in Details)

ALL REINFORCING BAR MARKS SHALL BE PREFIXED AS FOLLOWS:		
SPAN 11	–	11UES
SPAN 12	–	12UES
SPAN 13	–	13UES

COUNTY BRIDGE NO. 84

HOWARD NEEDLES TAMMEN & BERGENDOFF
ARCHITECTS ENGINEERS PLANNERS
HNTB

UPPER DECK PLAN
SPAN 13
BR. NO. CUY – 6 – 1499
REHABILITATION OF
VETERANS MEMORIAL BRIDGE
(U.S. 6, 20, 42 & S.R. 3 OVER CUYAHOGA RIVER)
CLEVELAND CUYAHOGA COUNTY OHIO

DRAWN	TRACED	CHECKED	REVIEWED	REVISED
R.S.Y./J.L.V.	W.E.B./J.L.V	J.L.V./R.S.Y.	C.A.B.	
DATE 3/02/94	DATE 3/02/94	DATE 3/03/94	DATE 4/07/94	SHEET 205/270

\11646\CONCRETE\SPAN13.DWG

FHWA REGION	STATE	PROJECT	
5	OHIO		

339
412

CUYAHOGA COUNTY
CUY – 6 – 14.99

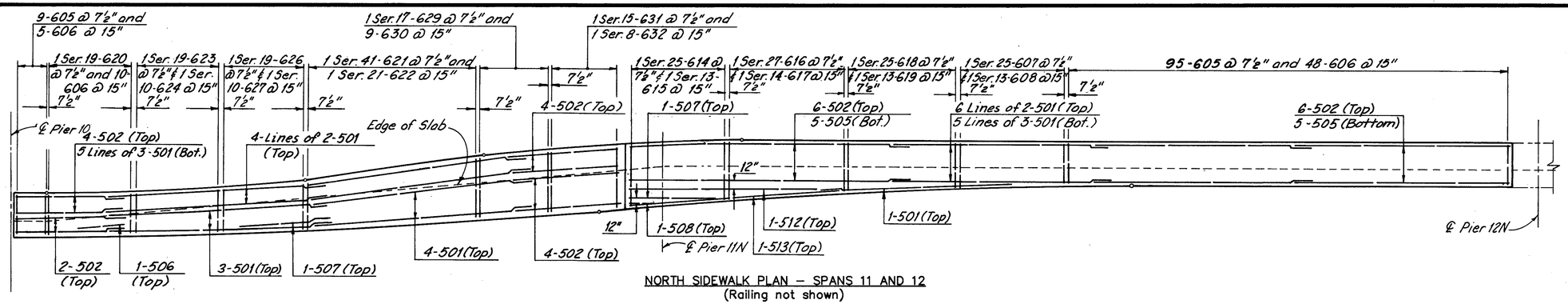

NORTH SIDEWALK PLAN – SPANS 11 AND 12
(Railing not shown)

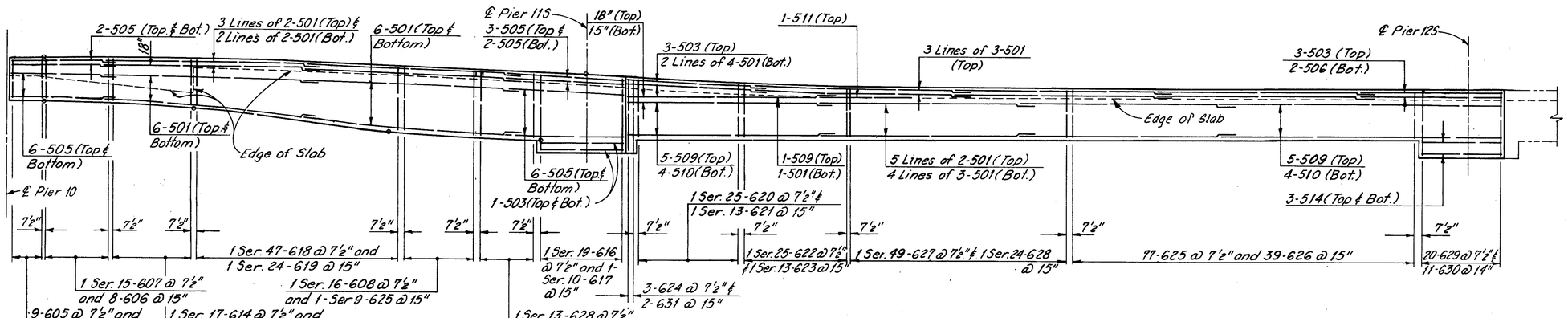

SOUTH SIDEWALK PLAN – SPANS 11 AND 12
(Railing not shown)

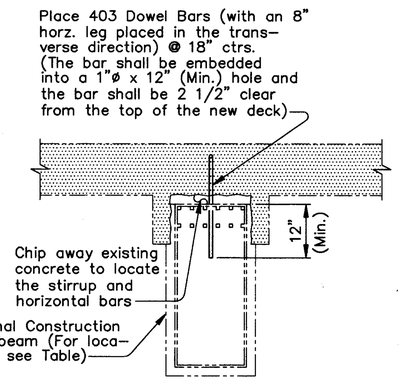

ORIGINAL CONSTRUCTION FLOORBEAM MODIFICATION DETAIL

SPAN 11
South Bay – Floorbeam
11, 2

SPAN 13
North Bay – Floorbeam
13, 7
South Bay – Floorbeam
13, 7

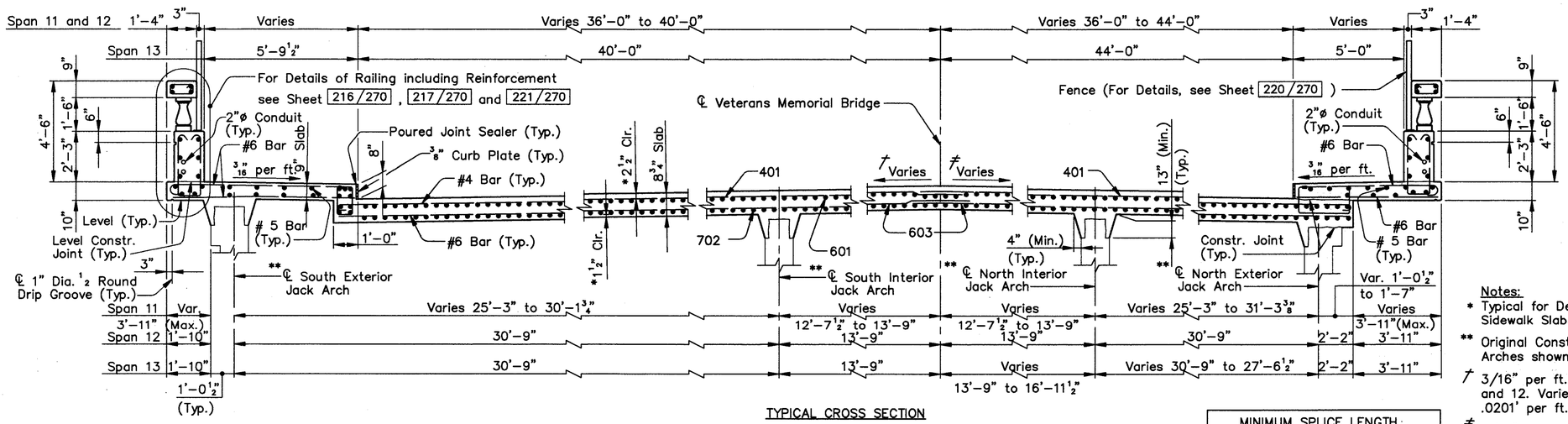

TYPICAL CROSS SECTION

ALL REINFORCING BAR MARKS SHALL BE PREFIXED AS FOLLOWS:		
SPAN 11	–	11UES
SPAN 12	–	12UES
SPAN 13	–	13UES

MINIMUM SPLICE LENGTH	
BAR	LENGTH
# 4	1'-9"
# 5	2'-0"
# 6 (TRANSVERSE)	2'-5"
# 6 (LONGITUDINAL)	3'-0"
# 7	4'-8"

(Typical except as shown in Details)

Notes:
* Typical for Deck and Sidewalk Slabs.
** Original Construction Jack Arches shown.
† 3/16" per ft. Spans 11 and 12. Varies 3/16" to .0201' per ft. Span 13.
‡ 3/16" per ft. Spans 11 and 12. Varies 3/16" to .0112' per ft. Span 13.
For additional notes, see Sheet 204/270.

Legend
Indicates Deck Removal

Notes:
For Suggested Construction Sequence, see Sheet 120/270.
For Member Identification and Removal Plan, see Sheet 23/270.
For Floorbeam Details, see Sheets 117/270 and 120/270.

COUNTY BRIDGE NO. 84

HOWARD NEEDLES TAMMEN & BERGENDOFF
ARCHITECTS ENGINEERS PLANNERS
HNTB

UPPER DECK DETAILS
SPANS 11, 12 and 13
BR. NO. CUY – 6 – 1499
REHABILITATION OF
VETERANS MEMORIAL BRIDGE
(U.S. 6, 20, 42 & S.R. 3 OVER CUYAHOGA RIVER)

CLEVELAND CUYAHOGA COUNTY OHIO

DRAWN	TRACED	CHECKED	REVIEWED	REVISED
R.S.Y./J.L.V.	W.E.B./J.L.V.	J.L.V./R.S.Y.	C.A.B.	
DATE 3/16/94	DATE 3/16/94	DATE 3/17/94	DATE 4/07/94	SHEET 206/270

\11646\CONCRETE\SPAN1112.DWG

FHWA REGION	STATE	PROJECT	
5	OHIO		

340
412

CUYAHOGA COUNTY
CUY – 6 – 14.99

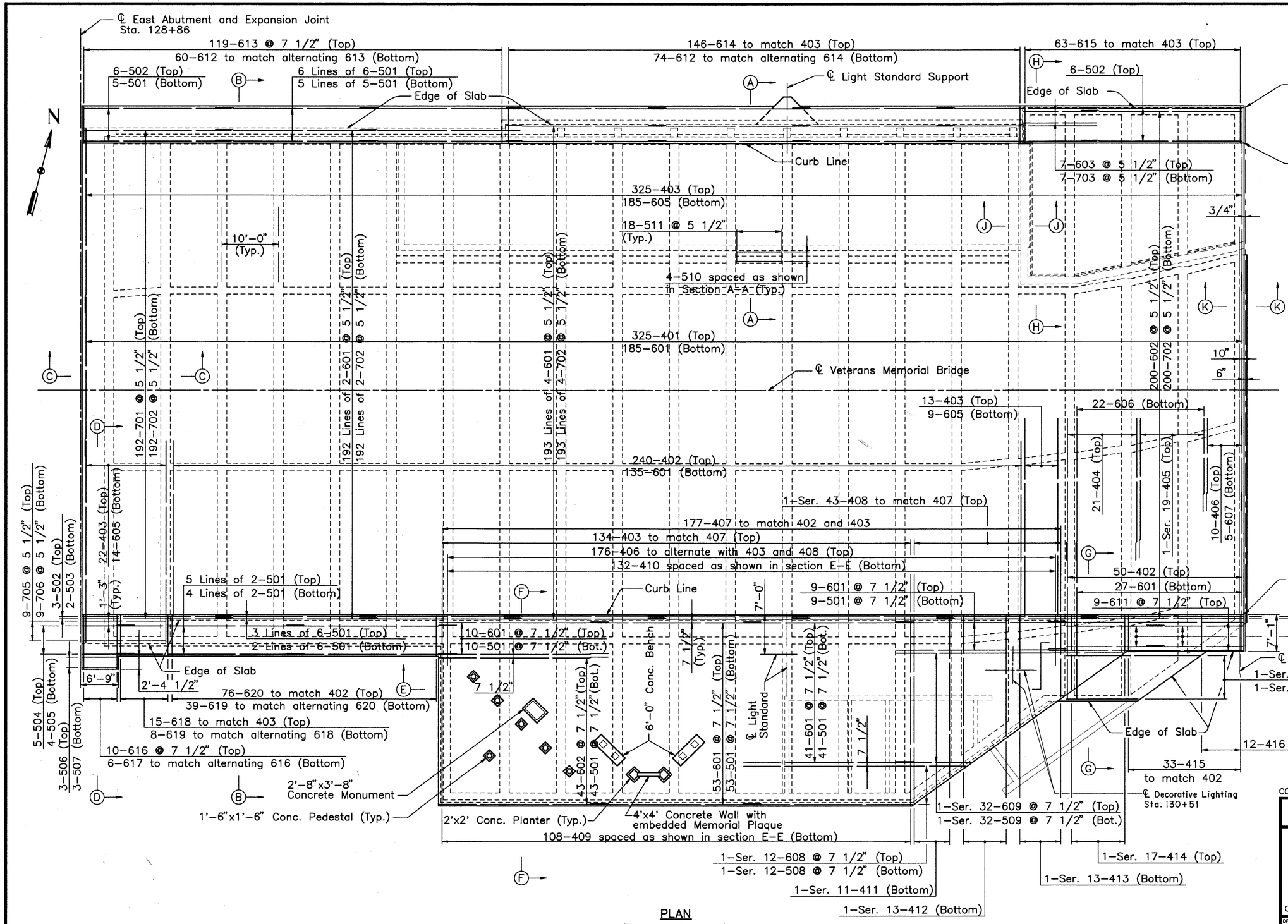

PLAN
(Railing not shown)

℄ Expansion Joint (For details, see Standard Construction Drawing BP–2.2, 2–21–92, and Section K–K on sheet 209/270) (Include with Item 305 of Roadway Plans for payment)

MINIMUM SPLICE LENGTH	
BAR	LENGTH
# 4	1'–9"
# 5	2'–0"
# 6 (TRANSVERSE)	2'–5"
# 6 (LONGITUDINAL)	3'–0"
# 7	4'–8"

NOTE:
ALL REINFORCING BAR MARKS SHALL BE PREFIXED ESUES.

NOTES:
Ser. – denotes Series
Bot. – denotes Bottom
For cross sections, see sheets 208/270 and 209/270 .
For Removal Details, see sheets 61/270 and 62/270 .
For Floorbeam Details, see sheets 121/270 and 122/270 .
For Concrete Pedestal, Bench, Monument, Planter, and Wall with embedded Plaque Details and Location Plan, see sheet 210/270 .
For Utility Support Details, see sheets 232/270 and 233/270 .
For Light Standard Support Details, see sheet 222/270 .

COUNTY BRIDGE NO. 84

HOWARD NEEDLES TAMMEN & BERGENDOFF
ARCHITECTS ENGINEERS PLANNERS
HNTB

UPPER DECK PLAN
EAST SIDE STATION
BR. NO. CUY – 6 – 1499
REHABILITATION OF
VETERANS MEMORIAL BRIDGE
(U.S. 6, 20, 42 & S.R. 3 OVER CUYAHOGA RIVER)
CLEVELAND CUYAHOGA COUNTY OHIO

DRAWN	TRACED	CHECKED	REVIEWED	REVISED
A.D.Y.	A.D.Y.	J.L.V.	C.A.B.	
DATE 12/15/93	DATE 12/15/93	DATE 2/18/94	DATE 3/31/94	SHEET 207/270

\11646\CONCRETE\ESTA.DWG

FHWA REGION	STATE	PROJECT	
5	OHIO		

341
412

CUYAHOGA COUNTY
CUY – 6 – 14.99

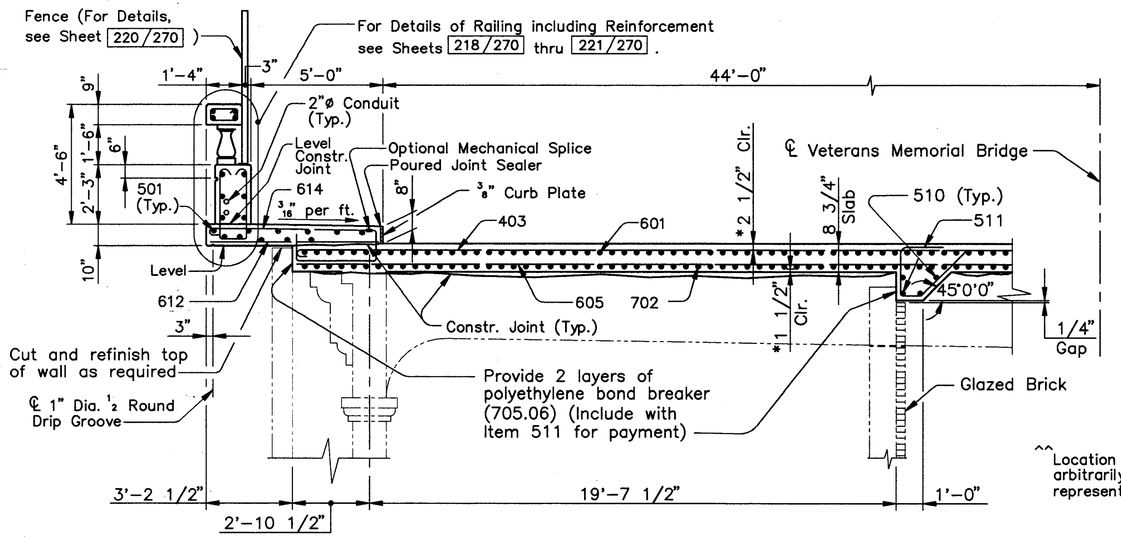

SECTION A–A

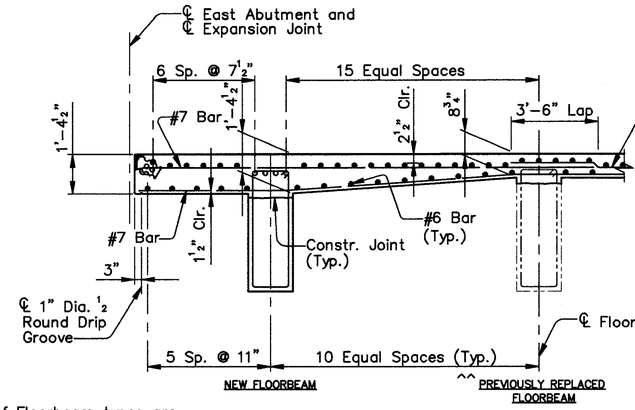

^^ Location of Floorbeam types are arbitrarily shown and may not represent actual locations.

SECTION C–C
(Transverse Reinf. in Floorbeams not shown)

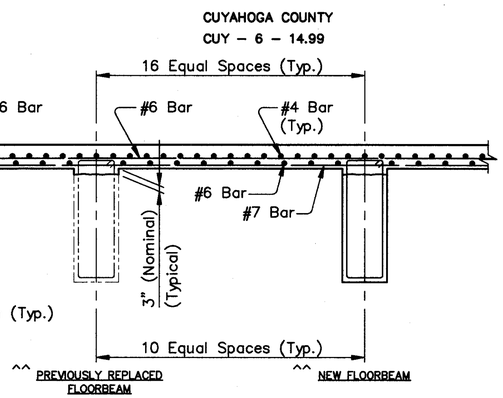

TYPICAL LONGITUDINAL SECTION
(Transverse Reinf. in Floorbeams not shown)

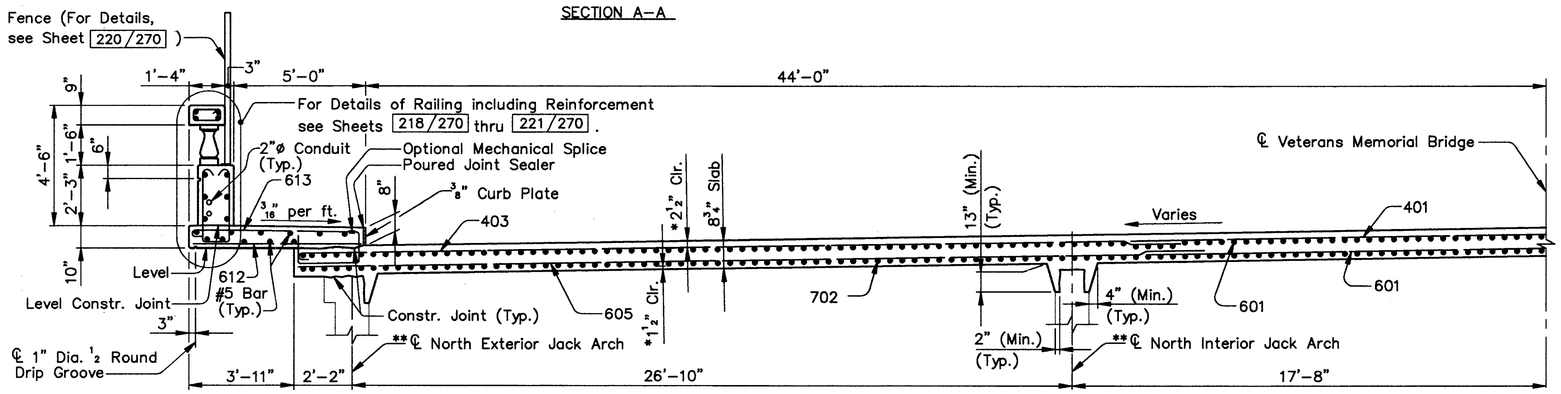

SECTION B–B
(North half shown)

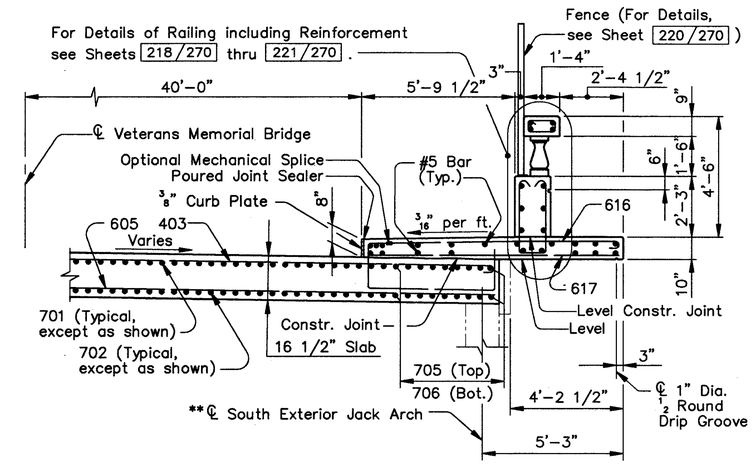

SECTION D–D

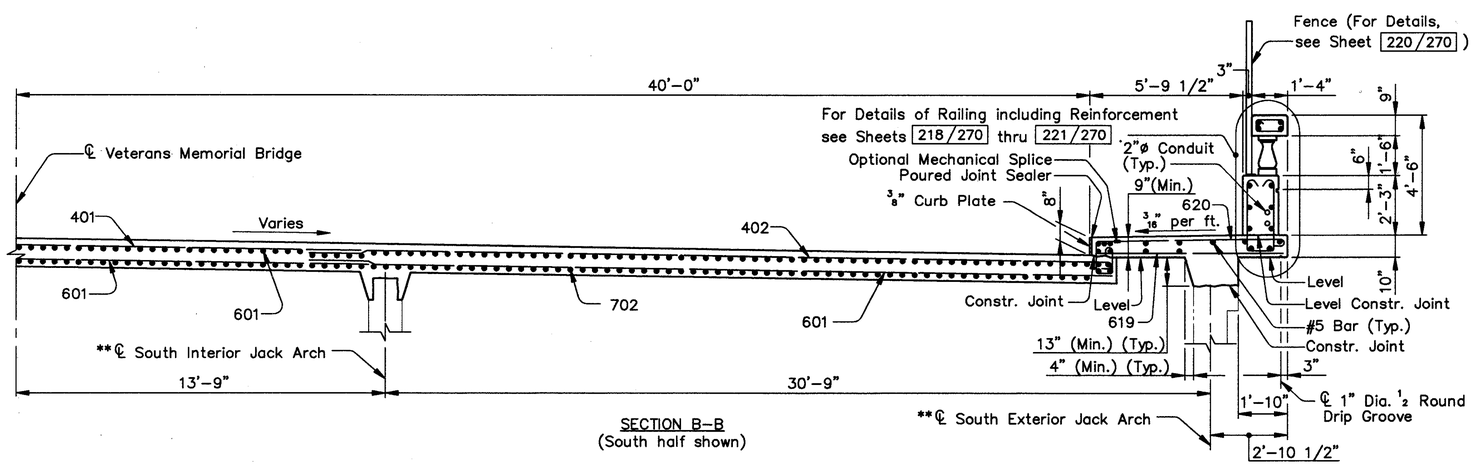

SECTION B–B
(South half shown)

NOTES:
* Typical for Deck and Sidewalk Slabs.
** Original Construction Jack Arches shown.
For details of Previously Replaced Jack Arches, see Sheet 48/270.
For Jack Arch Replacement Details, see Sheet 116/270.
For Floorbeam Replacement Details, see Sheets 121/270 and 122/270.
For location of Cross Sections, see Sheet 207/270.
For Removal Details, see Sheets 61/270 and 62/270.

MINIMUM SPLICE LENGTH	
BAR	LENGTH
# 4	1'-9"
# 5	2'-0"
# 6 (TRANSVERSE)	2'-5"
# 6 (LONGITUDINAL)	3'-0"
# 7	4'-8"

(Typical except as shown in Details)

COUNTY BRIDGE NO. 84

HOWARD NEEDLES TAMMEN & BERGENDOFF
ARCHITECTS ENGINEERS PLANNERS
HNTB

DECK SLAB DETAILS
EAST SIDE STATION
BR. NO. CUY – 6 – 1499
REHABILITATION OF
VETERANS MEMORIAL BRIDGE
(U.S. 6, 20, 42 & S.R. 3 OVER CUYAHOGA RIVER)

CLEVELAND CUYAHOGA COUNTY OHIO

DRAWN	TRACED	CHECKED	REVIEWED	REVISED
ADY	ADY	JLV	CAB	
DATE 01/13/94	DATE 01/13/94	DATE 2/18/94	DATE 3/31/94	SHEET 208/270

\11646\CONCRETE\ESTAX1

FHWA REGION	STATE	PROJECT	
5	OHIO		

342/412

CUYAHOGA COUNTY
CUY – 6 – 14.99

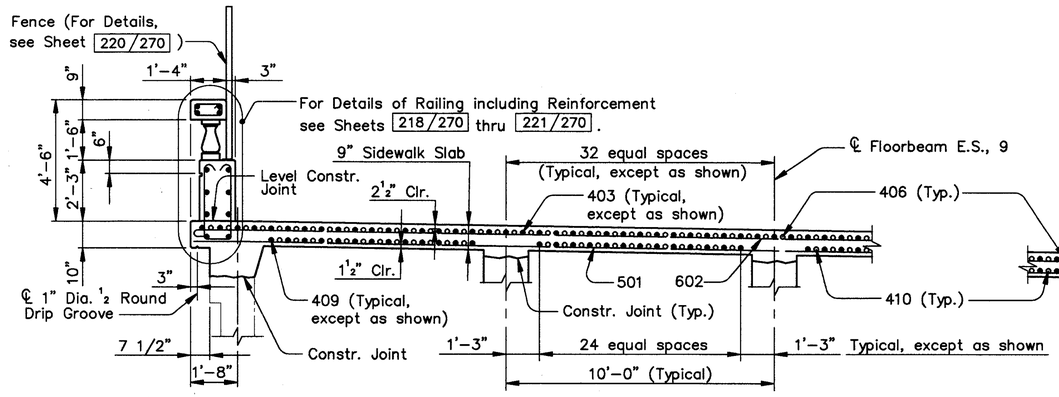

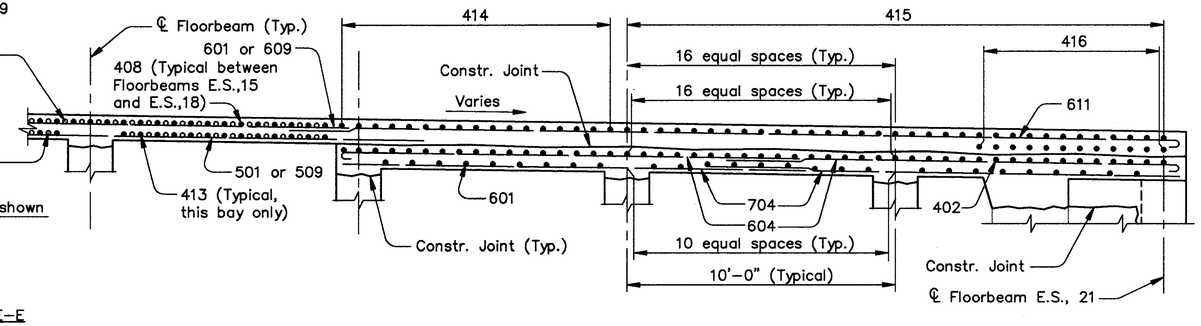

SECTION E–E

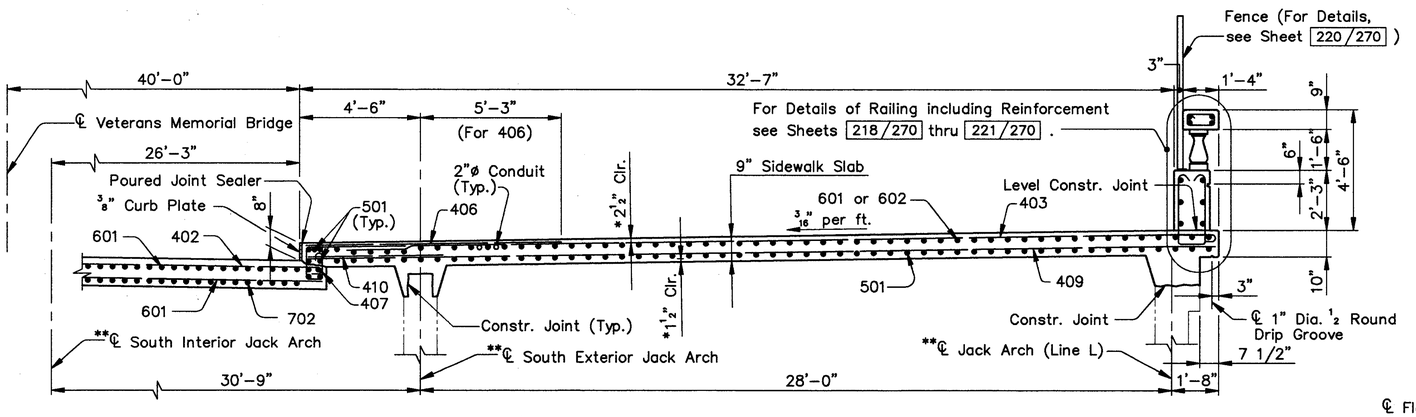

SECTION F–F

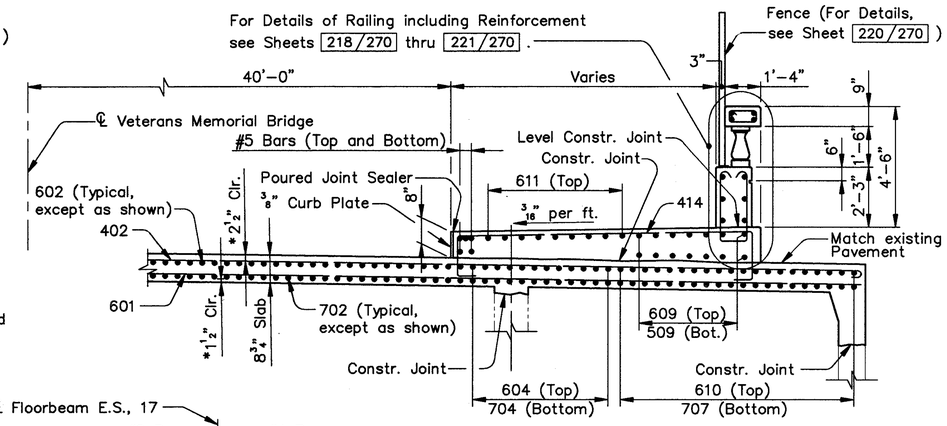

SECTION G–G

NOTE A:
Provide 2 layers of polyethylene bond breaker (705.06) (Include with Item 511 for payment)

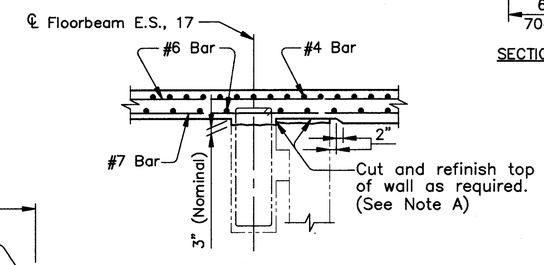

SECTION J–J

NOTES:
* Typical for Deck and Sidewalk Slabs.
** Original Construction Jack Arches shown.
For additional notes, see Sheet 208/270.
For haunch dimensions, see Sheet 208/270.

MINIMUM SPLICE LENGTH	
BAR	LENGTH
# 4	1'-9"
# 5	2'-0"
# 6 (TRANSVERSE)	2'-5"
# 6 (LONGITUDINAL)	3'-0"
# 7	4'-8"

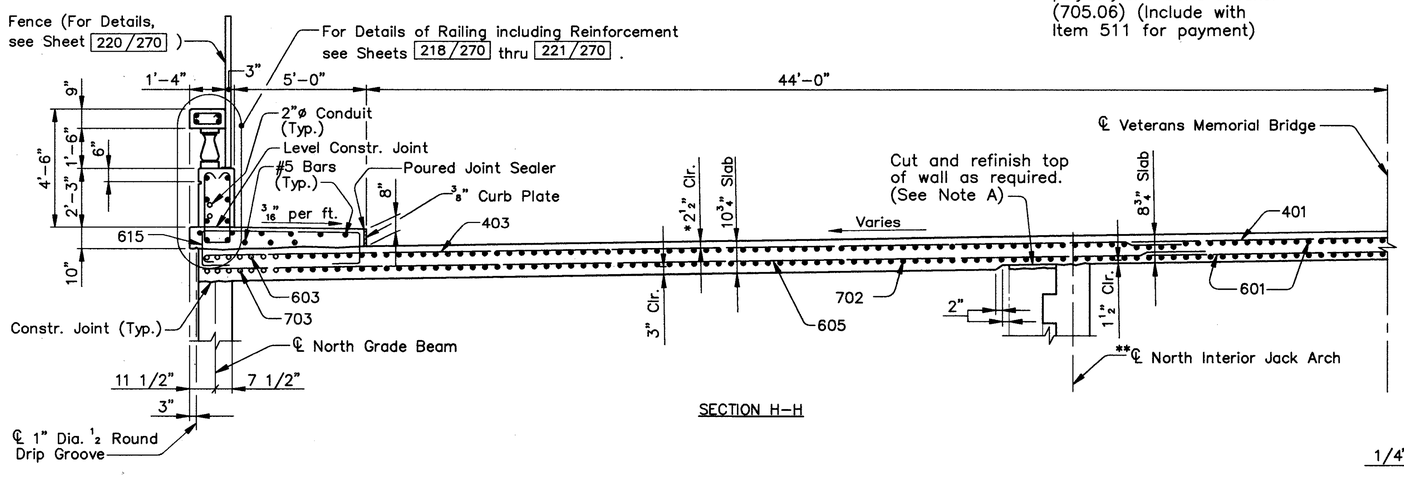

SECTION H–H

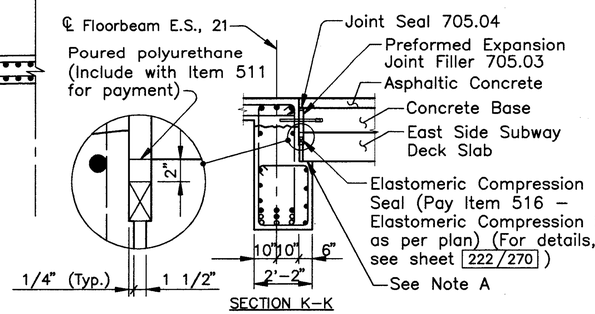

SECTION K–K

COUNTY BRIDGE NO. 84

HOWARD NEEDLES TAMMEN & BERGENDOFF
ARCHITECTS ENGINEERS PLANNERS
HNTB

DECK SLAB DETAILS
EAST SIDE STATION
BR. NO. CUY – 6 – 1499
REHABILITATION OF
VETERANS MEMORIAL BRIDGE
(U.S. 6, 20, 42 & S.R. 3 OVER CUYAHOGA RIVER)

CLEVELAND CUYAHOGA COUNTY OHIO

DRAWN	TRACED	CHECKED	REVIEWED	REVISED
ADY	ADY	JLV	CAB	
DATE 01/13/94	DATE 01/13/94	DATE 2/18/94	DATE 3/31/94	SHEET 209/270

\11646\CONCRETE\ESTAX2

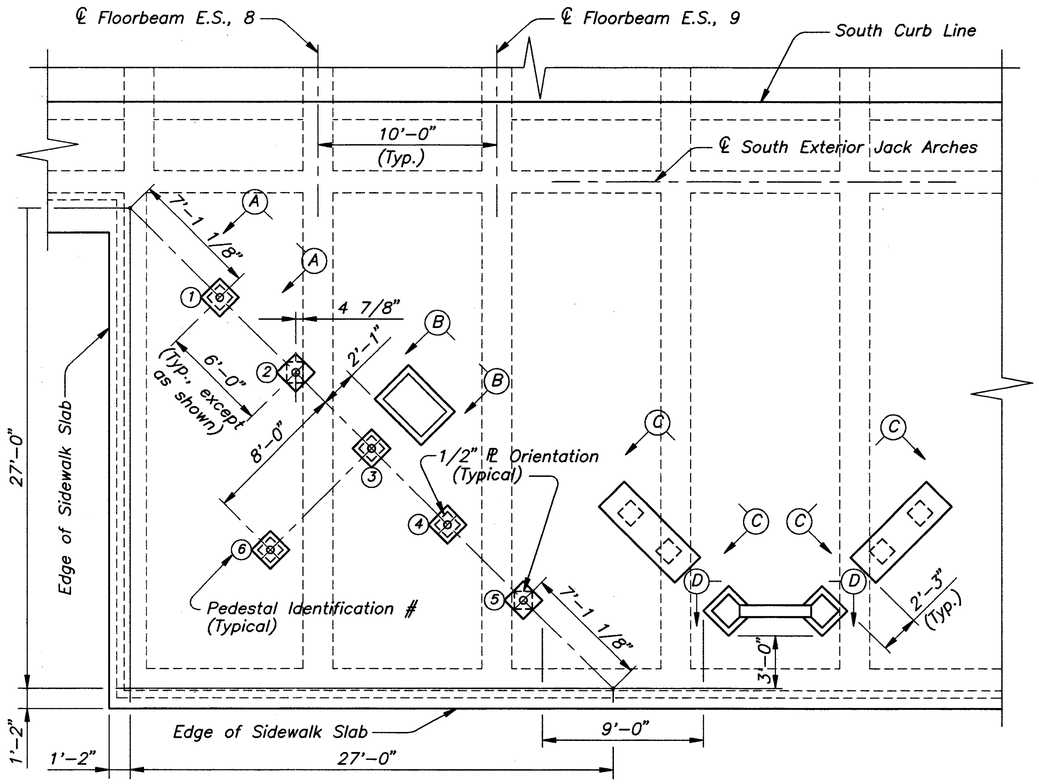

Plan

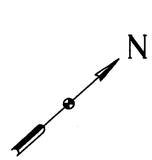

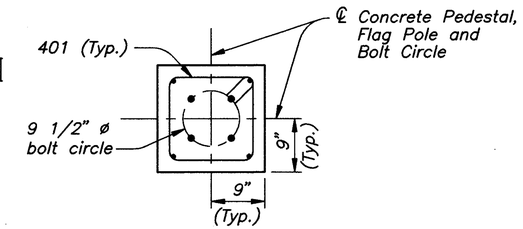

Section X–X

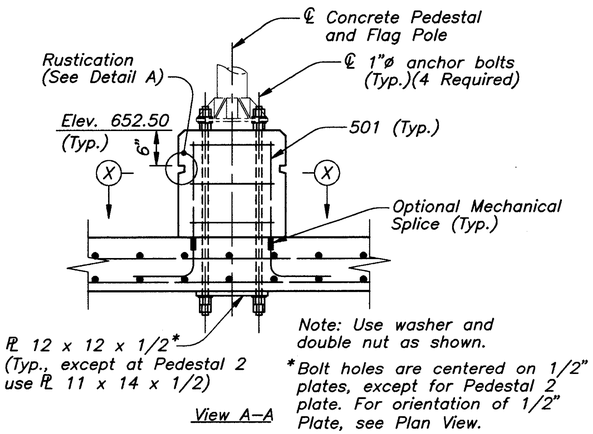

Note: Use washer and double nut as shown.

*Bolt holes are centered on 1/2" plates, except for Pedestal 2 plate. For orientation of 1/2" Plate, see Plan View.

View A–A

Concrete Pedestal Details

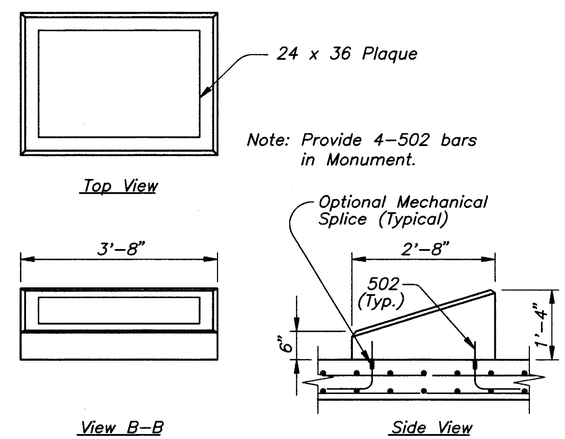

Top View

Note: Provide 4–502 bars in Monument.

View B–B

Side View

Concrete Monument Details

FHWA REGION	STATE	PROJECT	
5	OHIO		

343/412

CUYAHOGA COUNTY
CUY – 6 – 14.99

BAR BENDING DIAGRAMS

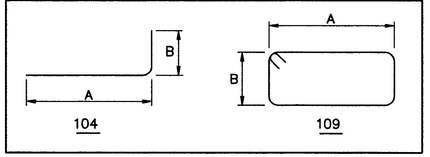

NOTE:
ALL REINFORCING BAR MARKS SHALL BE PREFIXED ESUME.

PAY ITEM NOTE:
All concrete, reinforcing steel, structural steel plates and anchor bolts, and other incidentals for the monument, benches, pedestals, wall and planters shall be included with Item Special – Flagpoles, monuments, planters, and benches for payment.

NOTES:
The Concrete Wall, Planter, Bench, and Monument shall be reinforced with 4x4–W1.4xW1.4 Epoxy–Coated Welded Wire Fabric in accordance with CMS 709.14. Provide 1 1/2" minimum cover on all faces.

For East Station Upper Deck Plan, see sheet 207/270 .

All structural steel shall be galvanized ASTM A36.

BAR SCHEDULE

MARK	NUMBER REQ'D	LENGTH FT.	LENGTH IN.	TYPE	A FT.	A IN.	B FT.	B IN.	C FT.	C IN.	D FT.	D IN.	E FT.	E IN.	SER. INCR. FT.	SER. INCR. IN.	WEIGHT (LBS.)
DECK SLAB – EPOXY COATED BARS																	
ESUME401	18	5	2	109	1	0	1	0									–
ESUME501	56	2	8	104	2	0	0	10									–
ESUME502	4	1	6	104	0	10	0	10									–

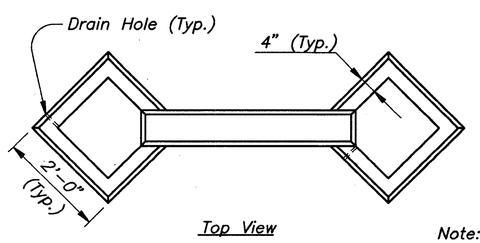

Top View

Note: Provide 2–501 bars in each wall of Planter.

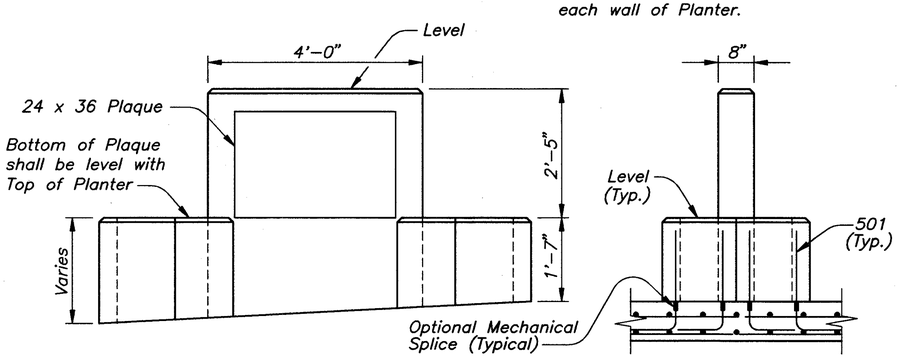

View D–D

Side View

Concrete Wall and Planter Details

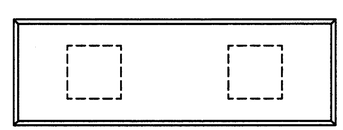

Top View

Note: Provide 4–501 bars in each Bench support.

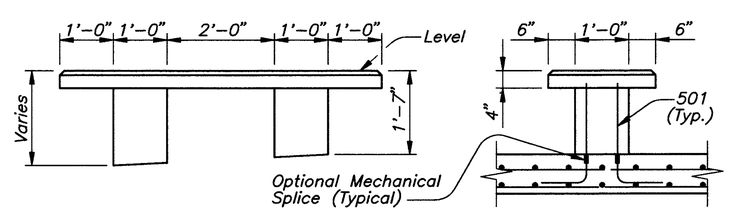

View C–C

Side View

Concrete Bench Details

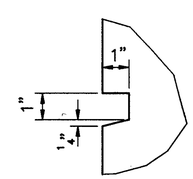

DETAIL A

COUNTY BRIDGE NO. 84

HOWARD NEEDLES TAMMEN & BERGENDOFF
ARCHITECTS ENGINEERS PLANNERS
HNTB

MISCELLANEOUS DETAILS
EAST SIDE STATION
BR. NO. CUY – 6 – 1499
REHABILITATION OF
VETERANS MEMORIAL BRIDGE
(U.S. 6, 20, 42 & S.R. 3 OVER CUYAHOGA RIVER)
CLEVELAND CUYAHOGA COUNTY OHIO

DRAWN ADY	TRACED ADY	CHECKED JLV	REVIEWED CAB	REVISED
DATE 01/15/94	DATE 01/15/94	DATE 02/20/94	DATE 03/31/94	SHEET 210/270

\11646\CONCRETE\ESTADTL

FHWA REGION	STATE	PROJECT	
5	OHIO		

344 / 412

CUYAHOGA COUNTY
CUY – 6 – 14.99

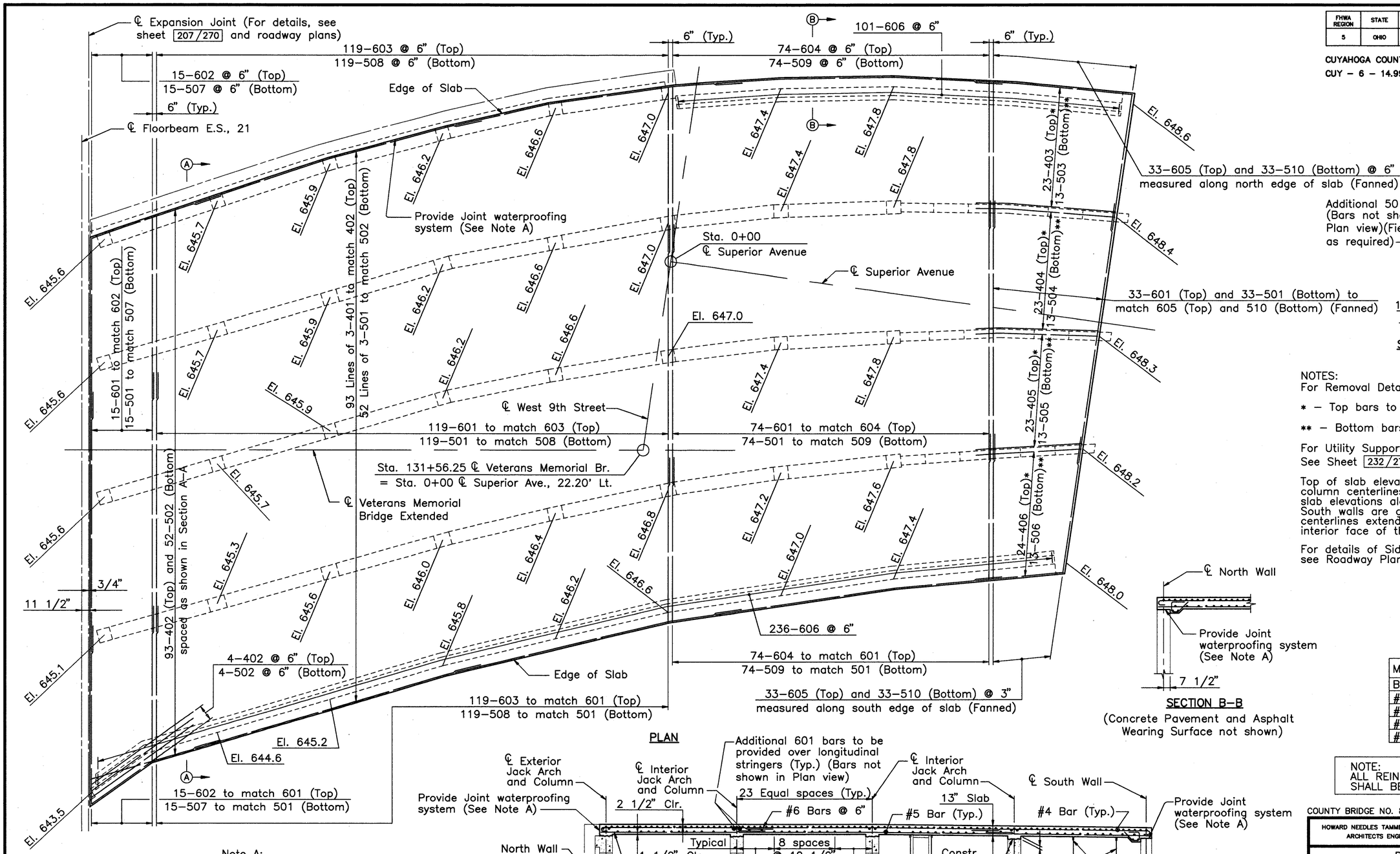

PLAN

Note A:
Provide Joint waterproofing system such as Injecto as manufactured by de neef Construction Chemicals Inc. or FUKO Injection Hose as manufactured by Absolute Waterproofing Systems, Inc. or an approved alternate. (Include with Item 511 for payment)

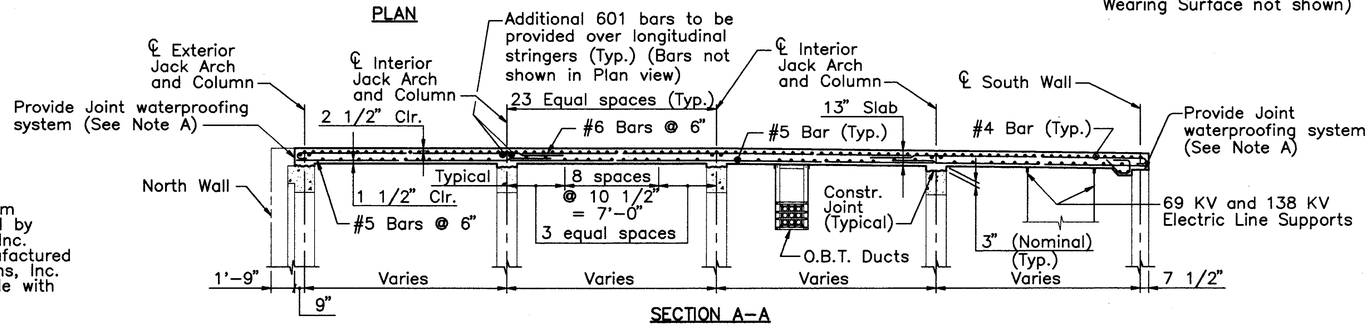

SECTION A–A
(Concrete Pavement and Asphalt Wearing Surface not shown)

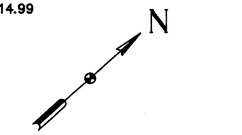

Additional 501 bars (Bars not shown in Plan view)(Field bend as required)

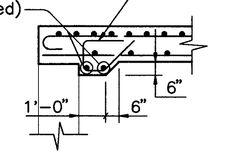

SLAB KEY DETAIL

NOTES:
For Removal Details, See Sheet 63/270.

* – Top bars to match 401

** – Bottom bars to match 501

For Utility Support Details, See Sheet 232/270 and 233/270.

Top of slab elevations are given at column centerlines, except Top of slab elevations along the North and South walls are given at the column centerlines extended and at the interior face of the wall.

For details of Sidewalk and Roadway, see Roadway Plans.

SECTION B–B
(Concrete Pavement and Asphalt Wearing Surface not shown)

MINIMUM SPLICE LENGTH	
BAR	LENGTH
# 4	1'–9"
# 5	2'–0"
# 6 (Trans.)	2'–5"
# 6 (Longit.)	3'–0"

NOTE:
ALL REINFORCING BAR MARKS SHALL BE PREFIXED ESBUES.

COUNTY BRIDGE NO. 84

HOWARD NEEDLES TAMMEN & BERGENDOFF
ARCHITECTS ENGINEERS PLANNERS
HNTB

DECK PLAN
EAST SIDE SUBWAY
BR. NO. CUY – 6 – 1499
REHABILITATION OF
VETERANS MEMORIAL BRIDGE
(U.S. 6, 20, 42 & S.R. 3 OVER CUYAHOGA RIVER)
CLEVELAND CUYAHOGA COUNTY OHIO

DRAWN	TRACED	CHECKED	REVIEWED	REVISED
ADY	ADY	JLV	CAB	
DATE 12/20/93	DATE 12/20/93	DATE 2/22/94	DATE 3/31/94	SHEET 211/270

\11646\CONCRETE\ESUB.DWG

FHWA REGION	STATE	PROJECT	
5	OHIO		

345/412

CUYAHOGA COUNTY
CUY – 6 – 14.99

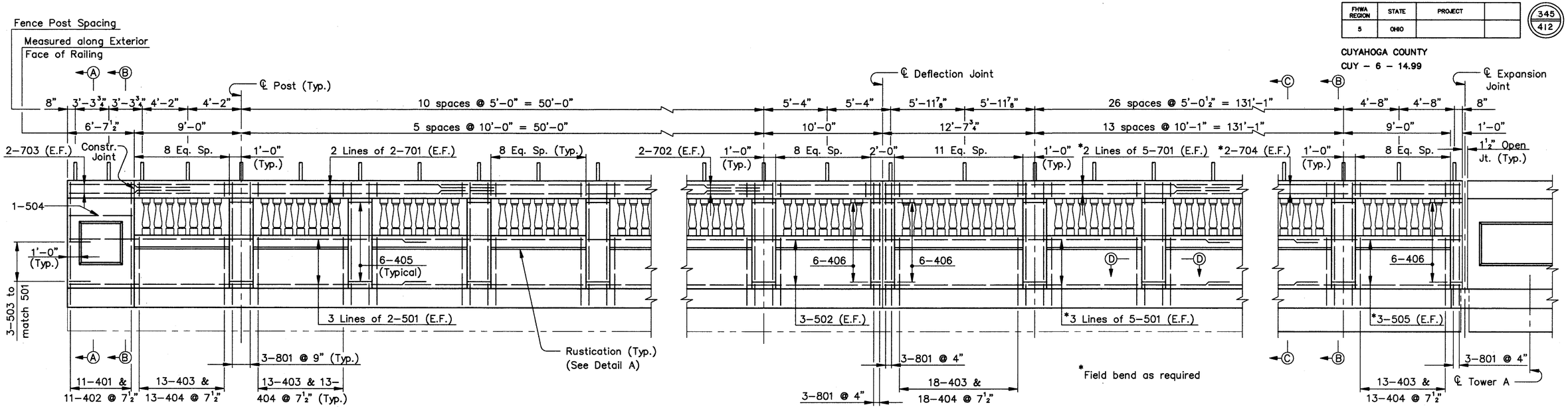

SOUTH RAILING – WEST SIDE STATION

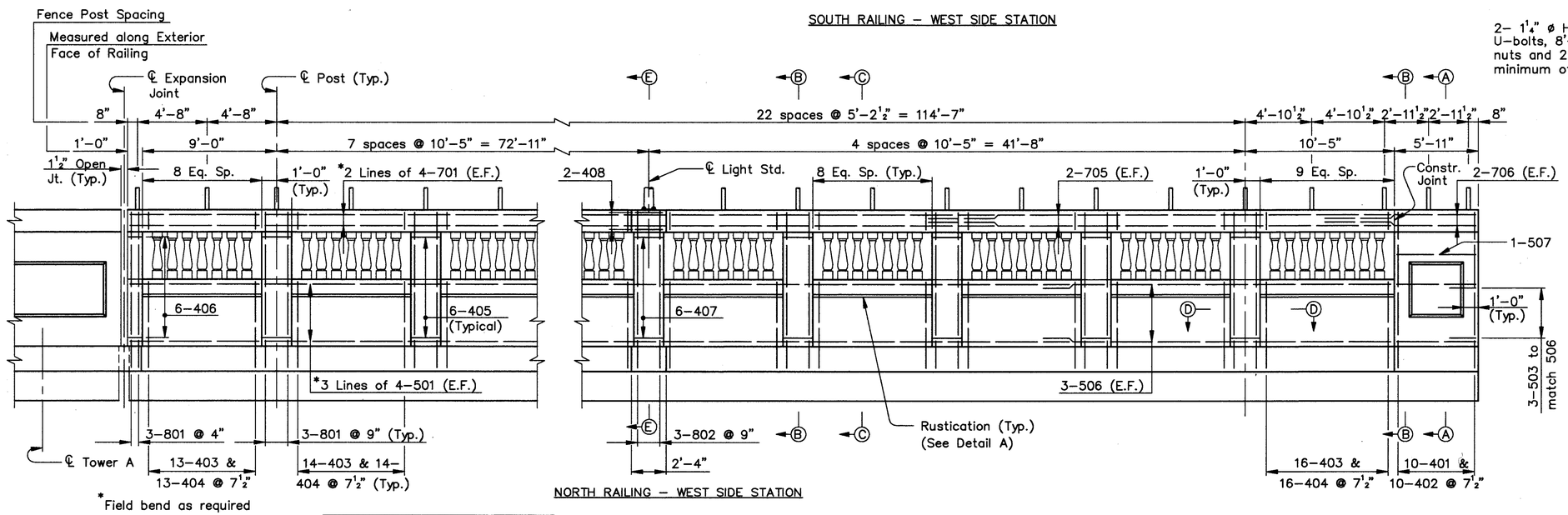

NORTH RAILING – WEST SIDE STATION

2– 1¼" ø Hot–dip galvanized U–bolts, 8'–0" long with 2 hex nuts and 2 washers. Extend bolts a minimum of 2⅝" above top of concrete.

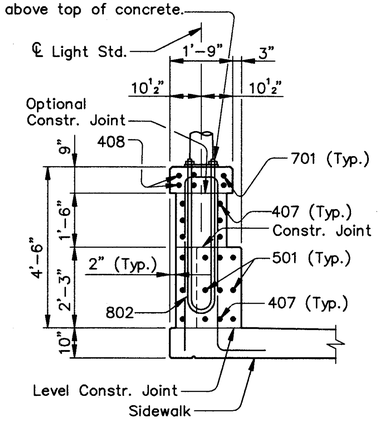

SECTION E–E
(Sidewalk Reinforcing and Fence Post not shown)

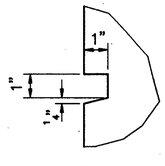

DETAIL A

MINIMUM SPLICE LENGTH	
BAR	LENGTH
# 4	1'–9"
# 5	2'–0"
# 6	3'–0"
# 7	4'–8"

ALL REINFORCING BAR MARKS SHALL BE PREFIXED AS FOLLOWS:
WEST SIDE STATION – WSER

Pay Item Notes:
All reinforcement for the Railing, except 401, 403, 801 and 802 Bars shall be included with the Railing, for payment.

All concrete above the sidewalk surface shall be included with the Railing for payment.

Note:
The light support details shown are based on an assumed bolt circle diameter of 11". The bolt circle diameter shall be adjusted as required to coordinate with the light pole design actually used.
If the bolt circle diameter differs from 11", the details on this sheet shall be adjusted accordingly, as approved by the Engineer.

Notes:
For Sections A–A thru D–D, and Misc. Railing Details, see Sheet 221/270.
For Fence Details, see Sheet 220/270.
For additional Light Standard Details, see Sheet 222/270.
E.F. denotes Each Face

COUNTY BRIDGE NO. 84

HOWARD NEEDLES TAMMEN & BERGENDOFF
ARCHITECTS ENGINEERS PLANNERS
HNTB

RAILING – WEST SIDE STATION
BR. NO. CUY – 6 – 1499
REHABILITATION OF
VETERANS MEMORIAL BRIDGE
(U.S. 6, 20, 42 & S.R. 3 OVER CUYAHOGA RIVER)
CLEVELAND CUYAHOGA COUNTY OHIO

DRAWN J.L.V.	TRACED J.L.V.	CHECKED W.D.D.	REVIEWED C.A.B.	REVISED
DATE 3/23/94	DATE 3/23/94	DATE 3/31/94	DATE 4/07/94	SHEET 212/270

\11646\CONCRETE\RAILS6.DWG

FHWA REGION	STATE	PROJECT	
5	OHIO		

346/412

CUYAHOGA COUNTY
CUY – 6 – 14.99

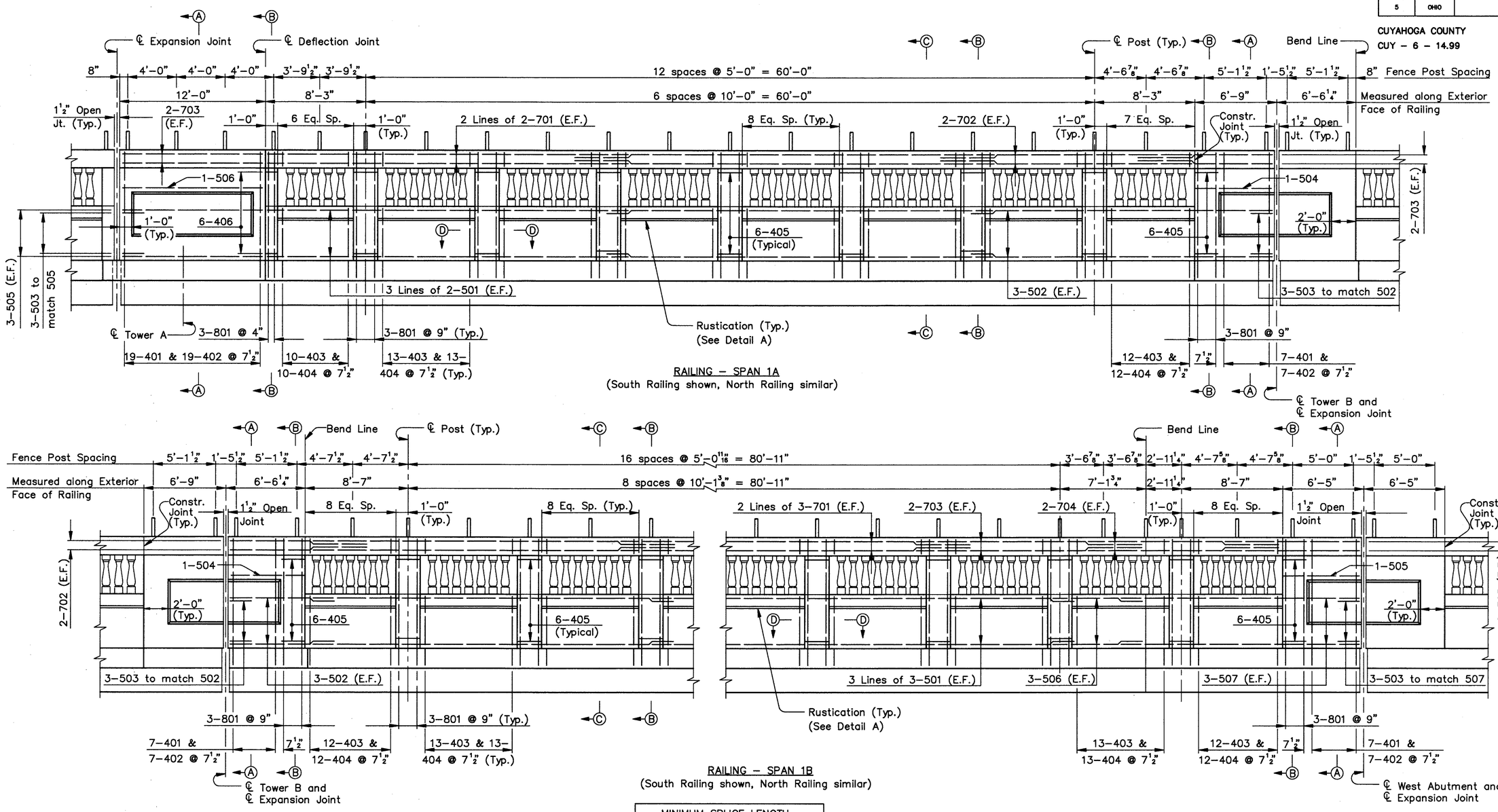

RAILING – SPAN 1A
(South Railing shown, North Railing similar)

RAILING – SPAN 1B
(South Railing shown, North Railing similar)

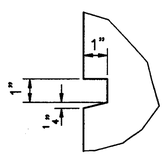

DETAIL A

MINIMUM SPLICE LENGTH	
BAR	LENGTH
# 4	1'–9"
# 5	2'–0"
# 6	3'–0"
# 7	4'–8"

ALL REINFORCING BAR MARKS SHALL BE PREFIXED AS FOLLOWS:		
SPAN 1A	–	1AER
SPAN 1B	–	1BER

Pay Item Notes:
All reinforcement for the Railing, except 401, 403 and 801 Bars shall be included with the Railing, for payment.

All concrete above the sidewalk surface shall be included with the Railing for payment.

Notes:
For Sections A–A thru D–D, and Misc. Railing Details, see Sheet 221/270.
For Fence Details, see Sheet 220/270.
E.F. denotes Each Face

COUNTY BRIDGE NO. 84

HOWARD NEEDLES TAMMEN & BERGENDOFF
ARCHITECTS ENGINEERS PLANNERS
HNTB

RAILING – SPANS 1A & 1B
BR. NO. CUY – 6 – 1499
REHABILITATION OF
VETERANS MEMORIAL BRIDGE
(U.S. 6, 20, 42 & S.R. 3 OVER CUYAHOGA RIVER)
CLEVELAND CUYAHOGA COUNTY OHIO

DRAWN J.L.V.	TRACED J.L.V.	CHECKED W.D.D.	REVIEWED C.A.B.	REVISED
DATE 3/03/94	DATE 3/03/94	DATE 3/28/94	DATE 4/07/94	SHEET 213/270

\11646\CONCRETE\RAILS1.DWG

FHWA REGION	STATE	PROJECT	
5	OHIO		

347/412

CUYAHOGA COUNTY
CUY – 6 – 14.99

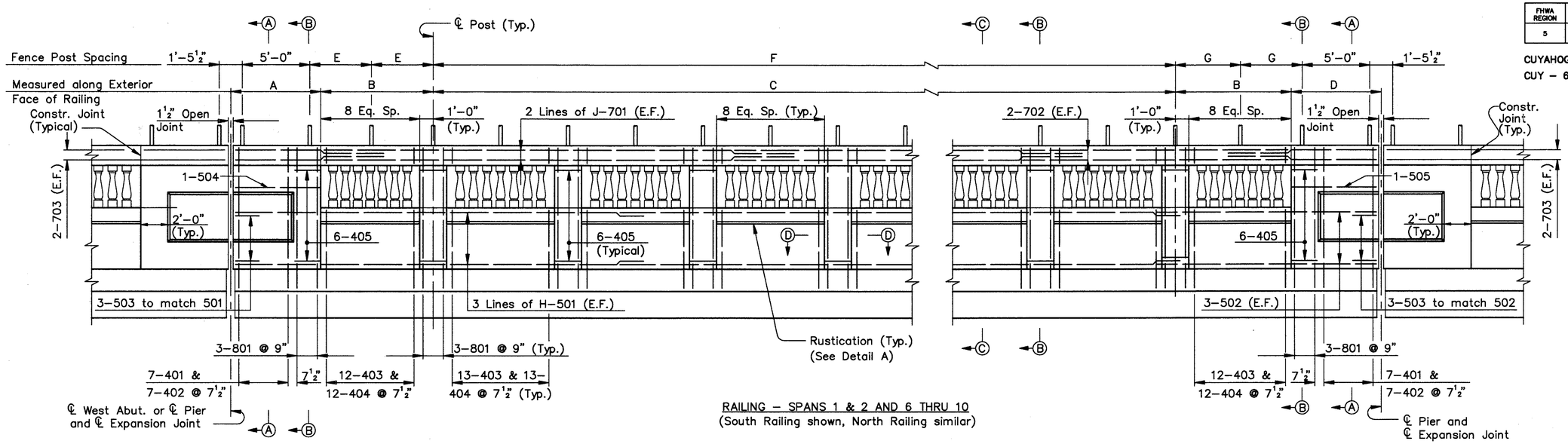

RAILING – SPANS 1 & 2 AND 6 THRU 10
(South Railing shown, North Railing similar)

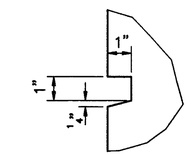

DETAIL A

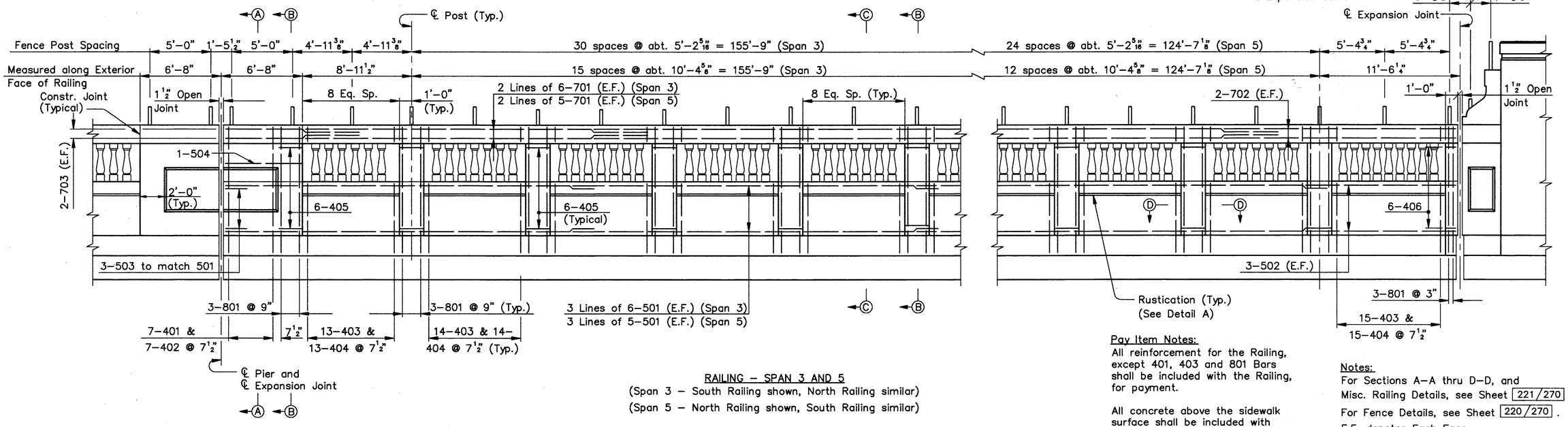

RAILING – SPAN 3 AND 5
(Span 3 – South Railing shown, North Railing similar)
(Span 5 – North Railing shown, South Railing similar)

Pay Item Notes:
All reinforcement for the Railing, except 401, 403 and 801 Bars shall be included with the Railing, for payment.

All concrete above the sidewalk surface shall be included with the Railing for payment.

Notes:
For Sections A–A thru D–D, and Misc. Railing Details, see Sheet 221/270.
For Fence Details, see Sheet 220/270.
E.F. denotes Each Face

COUNTY BRIDGE NO. 84

TABLE OF DIMENSIONS

	A	B	C	D	E	F	G	H	J
SPAN 1	6'–5"	8'–7"	10 SP. @ 10'–0" = 100'–0"	6'–8"	4'–7 5/8"	20 SP. @ 5'–0" = 100'–0"	4'–9 1/8"	4	3
SPAN 2	6'–8"	8'–11 1/2"	13 SP. @ 10'–4 1/2" = 134'–10 1/2"	6'–8"	4'–11 3/8"	26 SP. @ 5'–2 1/4" = 134'–10 1/2"	4'–11 3/8"	5	5
SPAN 6	6'–8"	8'–11 1/2"	12 SP. @ 10'–4 1/2" = 124'–6"	6'–8"	4'–11 3/8"	24 SP. @ 5'–2 1/4" = 124'–6"	4'–11 3/8"	5	4
SPAN 7	6'–8"	8'–11 1/2"	12 SP. @ 10'–4 1/2" = 124'–6"	6'–8"	4'–11 3/8"	24 SP. @ 5'–2 1/4" = 124'–6"	4'–11 3/8"	5	4
SPAN 8	6'–8"	8'–11 1/2"	12 SP. @ 10'–4 1/2" = 124'–6"	6'–8"	4'–11 3/8"	24 SP. @ 5'–2 1/4" = 124'–6"	4'–11 3/8"	5	4
SPAN 9	6'–8"	8'–7"	10 SP. @ 10'–0" = 100'–0"	6'–8"	4'–9 1/8"	20 SP. @ 5'–0" = 100'–0"	4'–9 1/8"	4	3
SPAN 10	6'–8"	8'–7"	9 SP. @ 10'–0" = 90'–0"	6'–6 1/2"	4'–9 1/8"	18 SP. @ 5'–0" = 90'–0"	4'–8 3/8"	4	3

MINIMUM SPLICE LENGTH

BAR	LENGTH
# 4	1'–9"
# 5	2'–0"
# 6	3'–0"
# 7	4'–8"

ALL REINFORCING BAR MARKS SHALL BE PREFIXED AS FOLLOWS:

SPAN 1	–	1ER
SPAN 2	–	2ER
SPAN 3	–	3ER
SPAN 5	–	5ER
SPAN 6	–	6ER
SPAN 7	–	7ER
SPAN 8	–	8ER
SPAN 9	–	9ER
SPAN 10	–	10ER

HOWARD NEEDLES TAMMEN & BERGENDOFF
ARCHITECTS ENGINEERS PLANNERS
HNTB

RAILING – SPANS 1 THRU 3 AND 5 THRU 10
BR. NO. CUY – 6 – 1499
REHABILITATION OF
VETERANS MEMORIAL BRIDGE
(U.S. 6, 20, 42 & S.R. 3 OVER CUYAHOGA RIVER)
CLEVELAND CUYAHOGA COUNTY OHIO

DRAWN J.L.V.	TRACED J.L.V.	CHECKED W.D.D.	REVIEWED C.A.B.	REVISED
DATE 3/14/94	DATE 3/14/94	DATE 3/28/94	DATE 4/07/94	SHEET 214/270

\11646\CONCRETE\RAILS2.DWG

FHWA REGION	STATE	PROJECT	
5	OHIO		

348/412

CUYAHOGA COUNTY
CUY - 6 - 14.99

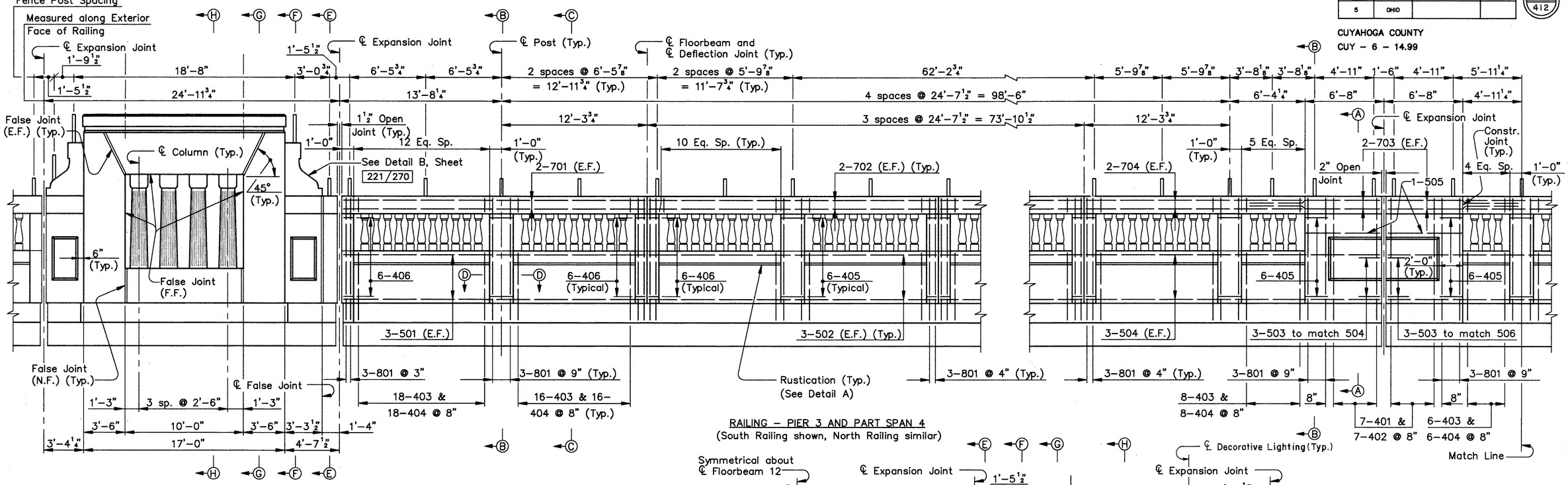

RAILING - PIER 3 AND PART SPAN 4
(South Railing shown, North Railing similar)

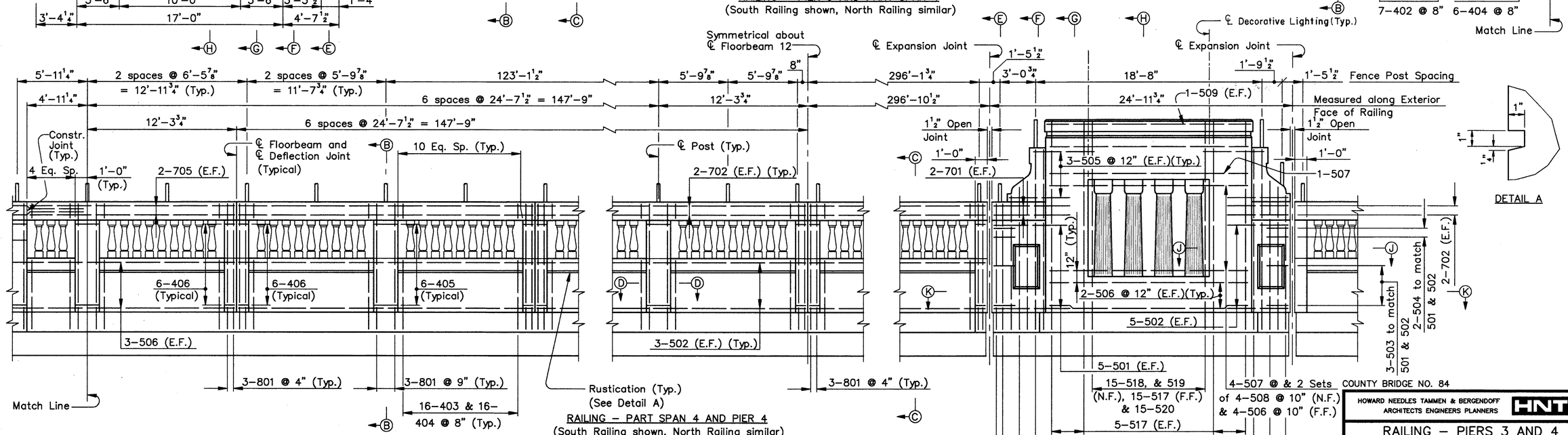

RAILING - PART SPAN 4 AND PIER 4
(South Railing shown, North Railing similar)

DETAIL A

MINIMUM SPLICE LENGTH	
BAR	LENGTH
# 4	1'-9"
# 5	2'-0"
# 6	3'-0"
# 7	4'-8"

ALL REINFORCING BAR MARKS SHALL BE PREFIXED AS FOLLOWS:		
PIER 3	-	P3ER
SPAN 4	-	4ER
PIER 4	-	P4ER

Pay Item Notes:
All reinforcement for the Railing, except 401, 403 and 801 Bars for Span 4 and 510, 517 and 518 Bars for Piers 3 and 4 shall be included with the Railing for payment.
All concrete above the sidewalk surface shall be included with the Railing for payment.

Notes:
For Sections A-A thru K-K, and Misc. Railing Details, see Sheet 221/270.
For Fence Details, see Sheet 220/270.
E.F. denotes Each Face
N.F. denotes Near Face
F.F. denotes Far Face

COUNTY BRIDGE NO. 84

HOWARD NEEDLES TAMMEN & BERGENDOFF
ARCHITECTS ENGINEERS PLANNERS
HNTB

RAILING - PIERS 3 AND 4 AND SPAN 4
BR. NO. CUY - 6 - 1499
REHABILITATION OF VETERANS MEMORIAL BRIDGE
(U.S. 6, 20, 42 & S.R. 3 OVER CUYAHOGA RIVER)
CLEVELAND CUYAHOGA COUNTY OHIO

DRAWN J.L.V.	TRACED J.L.V.	CHECKED W.D.D.	REVIEWED C.A.B.	REVISED
DATE 3/15/94	DATE 3/15/94	DATE 3/28/94	DATE 4/07/94	SHEET 215/270

\11646\CONCRETE\RAILS3.DWG

FHWA REGION	STATE	PROJECT	
5	OHIO		

349/412

CUYAHOGA COUNTY
CUY – 6 – 14.99

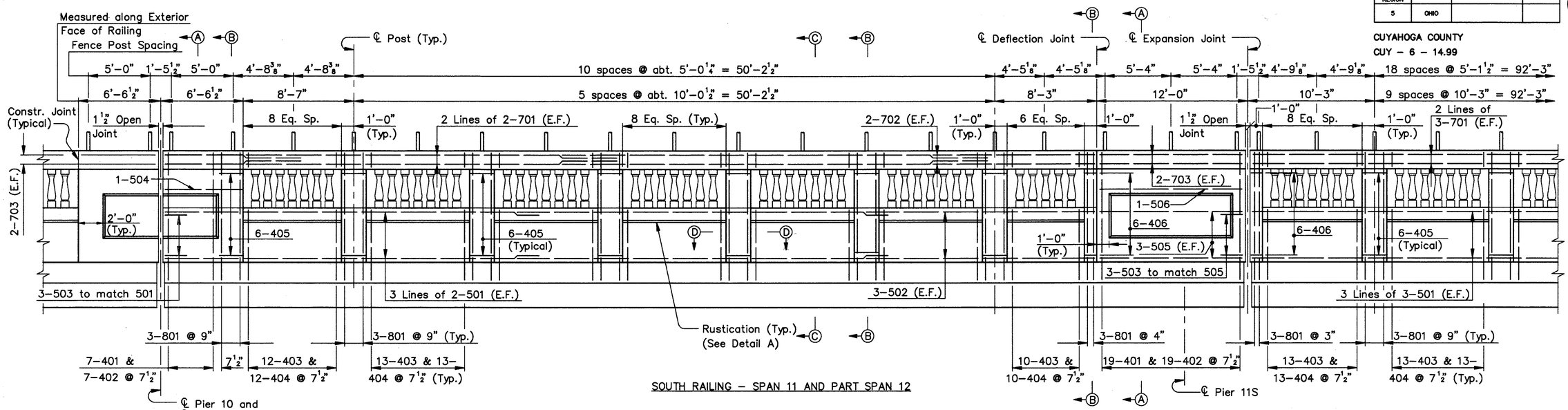

SOUTH RAILING – SPAN 11 AND PART SPAN 12

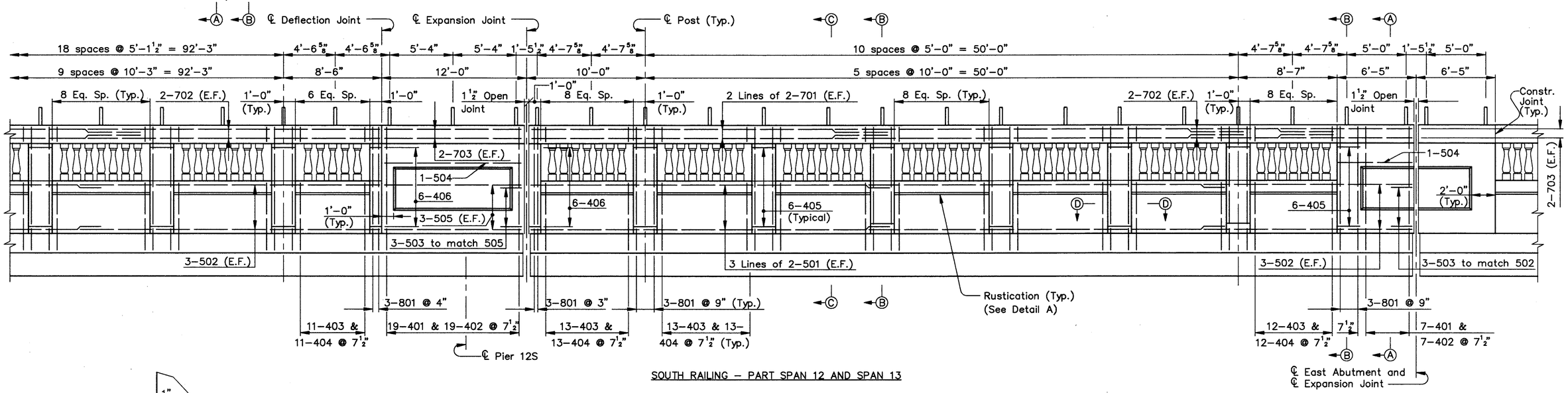

SOUTH RAILING – PART SPAN 12 AND SPAN 13

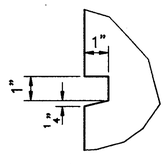

DETAIL A

MINIMUM SPLICE LENGTH	
BAR	LENGTH
# 4	1'–9"
# 5	2'–0"
# 6	3'–0"
# 7	4'–8"

ALL REINFORCING BAR MARKS SHALL BE PREFIXED AS FOLLOWS:		
SPAN 11	–	11ER
SPAN 12	–	12ER
SPAN 13	–	13ER

Pay Item Notes:
All reinforcement for the Railing, except 401, 403 and 801 Bars shall be included with the Railing, for payment.

All concrete above the sidewalk surface shall be included with the Railing for payment.

Notes:
For Sections A–A thru D–D, and Misc. Railing Details, see Sheet 221/270.
For Fence Details, see Sheet 220/270.
E.F. denotes Each Face

COUNTY BRIDGE NO. 84

HOWARD NEEDLES TAMMEN & BERGENDOFF
ARCHITECTS ENGINEERS PLANNERS
HNTB

SOUTH RAILING – SPANS 11, 12 AND 13
BR. NO. CUY – 6 – 1499
REHABILITATION OF
VETERANS MEMORIAL BRIDGE
(U.S. 6, 20, 42 & S.R. 3 OVER CUYAHOGA RIVER)
CLEVELAND CUYAHOGA COUNTY OHIO

DRAWN J.L.V.	TRACED J.L.V.	CHECKED W.D.D.	REVIEWED C.A.B.	REVISED
DATE 3/16/94	DATE 3/16/94	DATE 3/29/94	DATE 4/07/94	SHEET 216/270

\11646\CONCRETE\RAILS4.DWG

FHWA REGION	STATE	PROJECT	
5	OHIO		

350/412

CUYAHOGA COUNTY
CUY - 6 - 14.99

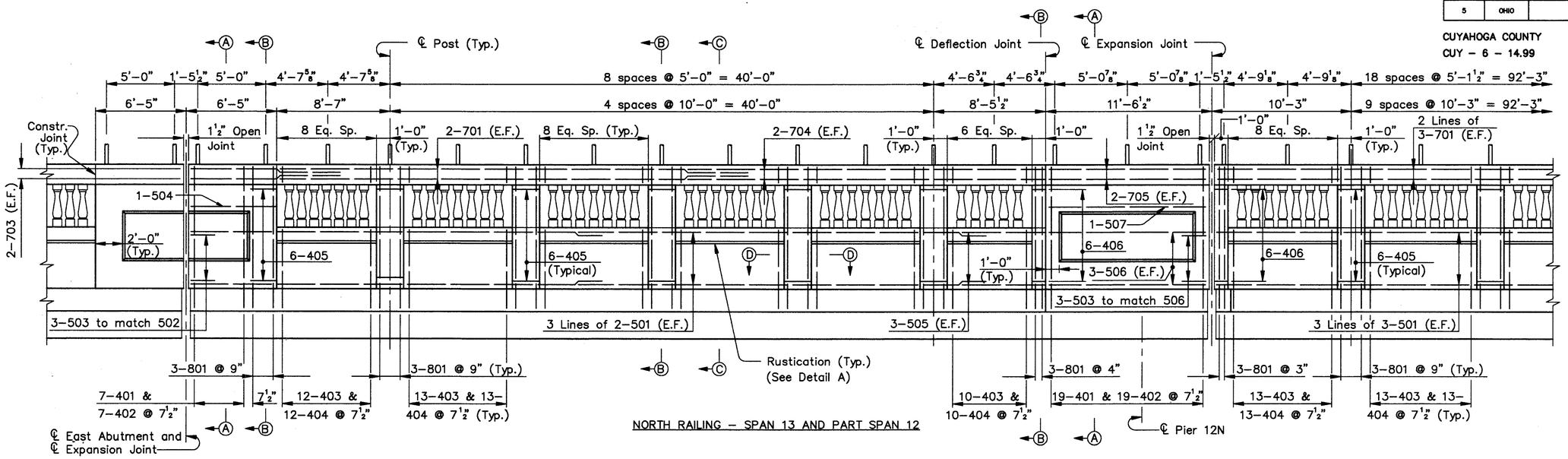

NORTH RAILING - SPAN 13 AND PART SPAN 12

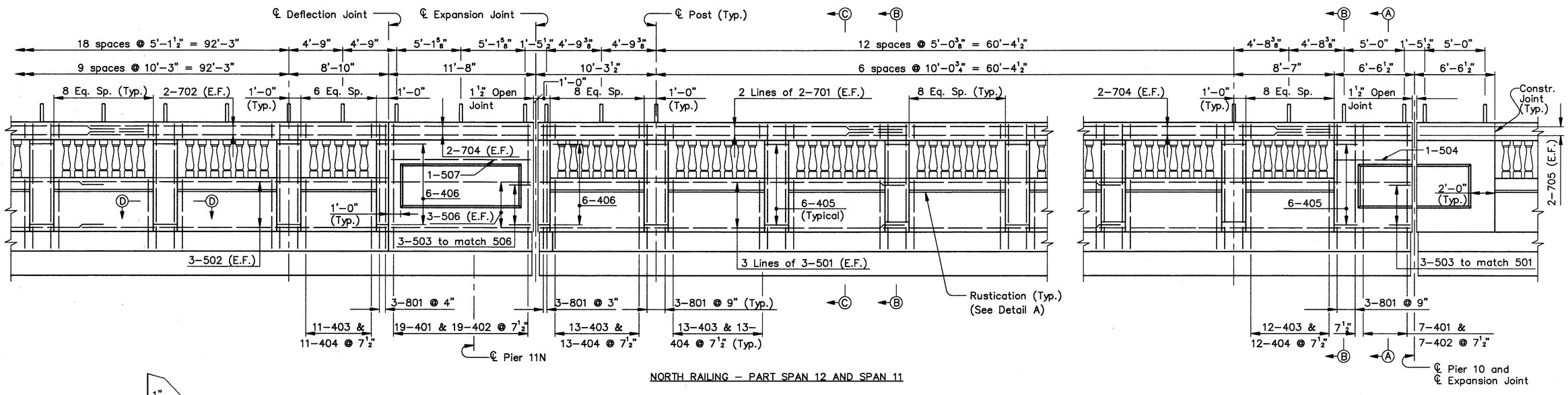

NORTH RAILING - PART SPAN 12 AND SPAN 11

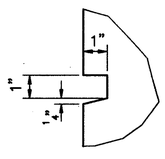

DETAIL A

MINIMUM SPLICE LENGTH	
BAR	LENGTH
# 4	1'-9"
# 5	2'-0"
# 6	3'-0"
# 7	4'-8"

ALL REINFORCING BAR MARKS SHALL BE PREFIXED AS FOLLOWS:		
SPAN 11	-	11ER
SPAN 12	-	12ER
SPAN 13	-	13ER

Pay Item Notes:
All reinforcement for the Railing, except 401, 403 and 801 Bars shall be included with the Railing, for payment.

All concrete above the sidewalk surface shall be included with the Railing for payment.

Notes:
For Sections A-A thru D-D, and Misc. Railing Details, see Sheet 221/270.
For Fence Details, see Sheet 220/270.
E.F. denotes Each Face

COUNTY BRIDGE NO. 84

HOWARD NEEDLES TAMMEN & BERGENDOFF
ARCHITECTS ENGINEERS PLANNERS
HNTB

NORTH RAILING - SPANS 11, 12 AND 13
BR. NO. CUY - 6 - 1499
REHABILITATION OF
VETERANS MEMORIAL BRIDGE
(U.S. 6, 20, 42 & S.R. 3 OVER CUYAHOGA RIVER)
CLEVELAND CUYAHOGA COUNTY OHIO

DRAWN J.L.V.	TRACED J.L.V.	CHECKED W.D.D.	REVIEWED C.A.B.	REVISED
DATE 3/17/94	DATE 3/17/94	DATE 3/29/94	DATE 4/07/94	SHEET 217/270

\11646\CONCRETE\RAILS4.DWG

FHWA REGION	STATE	PROJECT	
5	OHIO		

351/412

CUYAHOGA COUNTY
CUY – 6 – 14.99

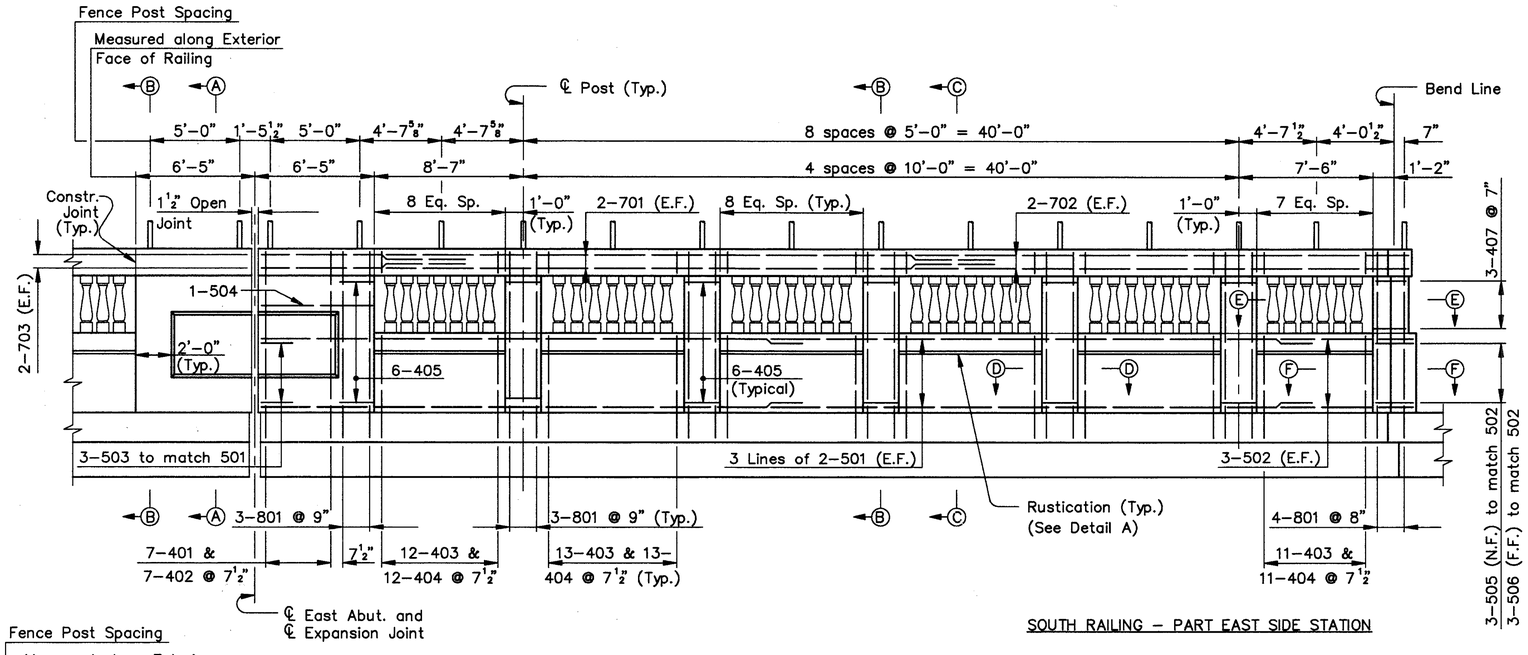

SOUTH RAILING – PART EAST SIDE STATION

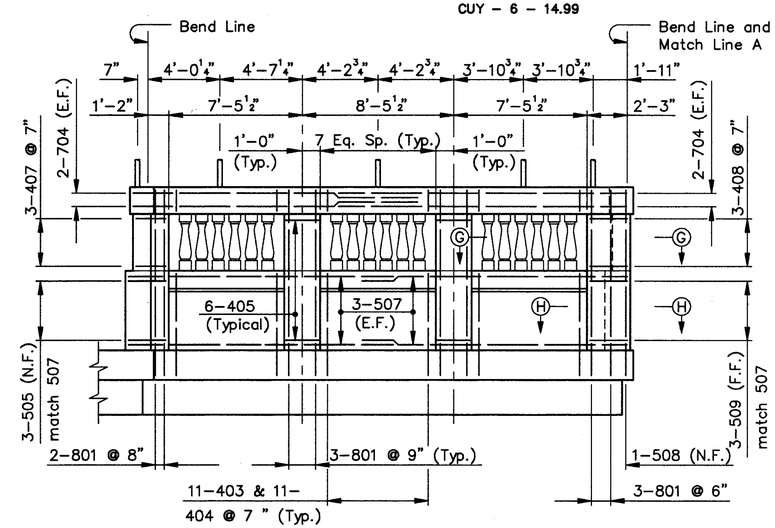

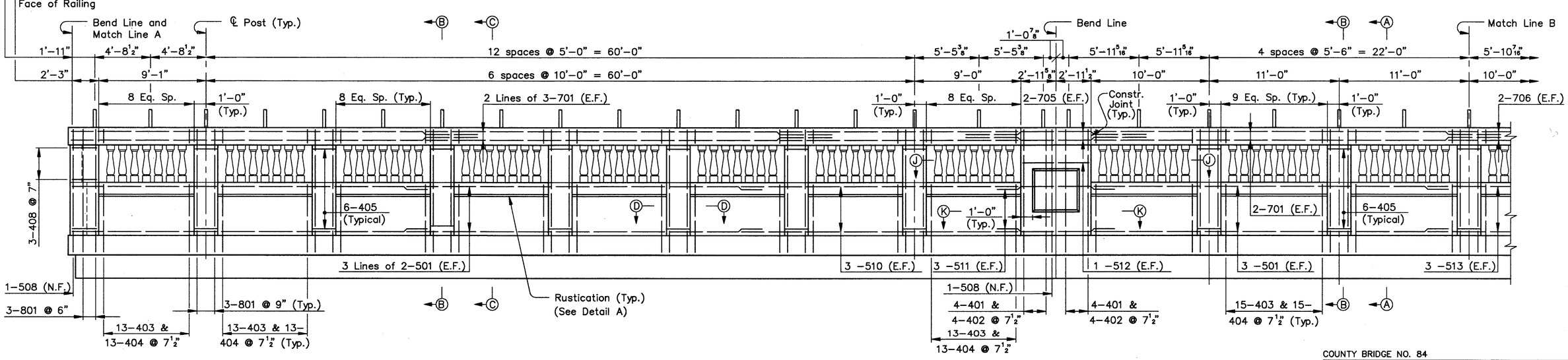

SOUTH RAILING – PART EAST SIDE STATION

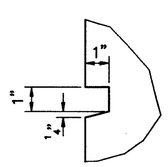

DETAIL A

MINIMUM SPLICE LENGTH	
BAR	LENGTH
# 4	1'–9"
# 5	2'–0"
# 6	3'–0"
# 7	4'–8"

ALL REINFORCING BAR MARKS SHALL BE PREFIXED AS FOLLOWS:
EAST SIDE STATION – ESER

Pay Item Notes:
All reinforcement for the Railing, except 401, 403, 508 and 801 Bars shall be included with the Railing, for payment.

All concrete above the sidewalk surface shall be included with the Railing for payment.

Notes:
For Sections A–A thru D–D, and Misc. Railing Details, see Sheet 221/270.
For Sections E–E thru K–K, see Sheet 219/270.
For Fence Details, see Sheet 220/270.
E.F. denotes Each Face
N.F. denotes Near Face
F.F. denotes Far Face

COUNTY BRIDGE NO. 84

HOWARD NEEDLES TAMMEN & BERGENDOFF
ARCHITECTS ENGINEERS PLANNERS
HNTB

SOUTH RAILING – EAST SIDE STATION
BR. NO. CUY – 6 – 1499
REHABILITATION OF
VETERANS MEMORIAL BRIDGE
(U.S. 6, 20, 42 & S.R. 3 OVER CUYAHOGA RIVER)
CLEVELAND CUYAHOGA COUNTY OHIO

DRAWN J.L.V.	TRACED J.L.V.	CHECKED W.D.D.	REVIEWED C.A.B.	REVISED
DATE 3/22/94	DATE 3/22/94	DATE 3/30/94	DATE 4/07/94	SHEET 218/270

\11646\CONCRETE\RAILS5.DWG

FHWA REGION	STATE	PROJECT	
5	OHIO		

352/412

CUYAHOGA COUNTY
CUY – 6 – 14.99

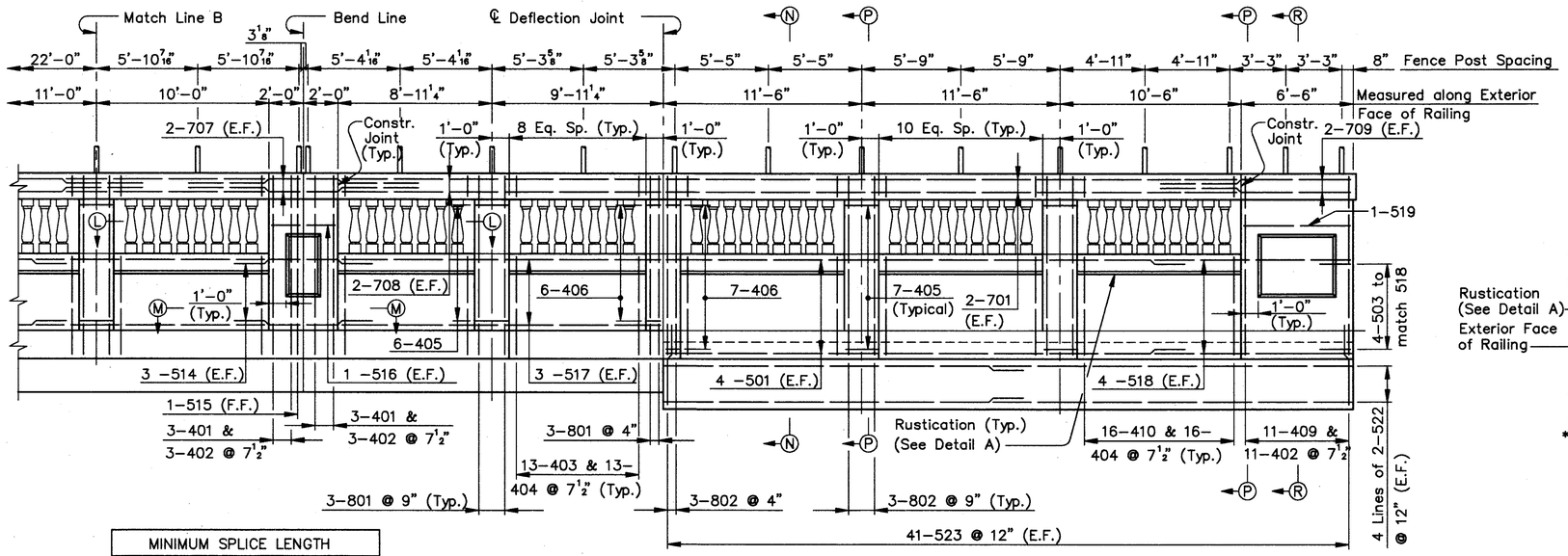

SOUTH RAILING – PART EAST SIDE STATION

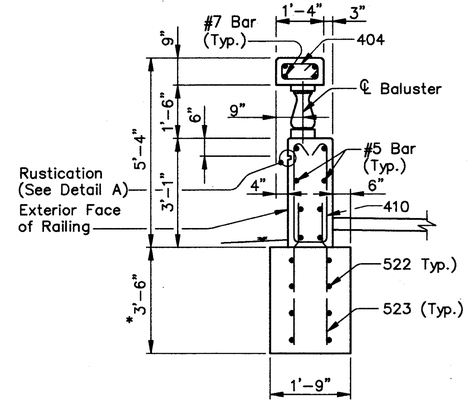

SECTION N–N
(Fence Post not shown)

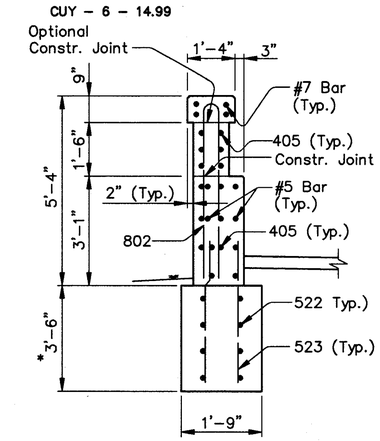

SECTION P–P
(Fence Post not shown)
(Section thru Post shown, Section thru Panel similar)

MINIMUM SPLICE LENGTH	
BAR	LENGTH
# 4	1'–9"
# 5	2'–0"
# 6	3'–0"
# 7	4'–8"

ALL REINFORCING BAR MARKS SHALL BE PREFIXED AS FOLLOWS:	
EAST SIDE STATION –	ESER

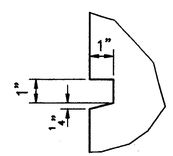

DETAIL A

Pay Item Notes:
All reinforcement for the Railing, except 401, 403, 515, 522, 523, and 801 Bars shall be included with the Railing, for payment.

All concrete above the sidewalk and footing surface shall be included with the Railing for payment.

* The bottom of the footing shall not be less than 3'–0" from the final ground line.

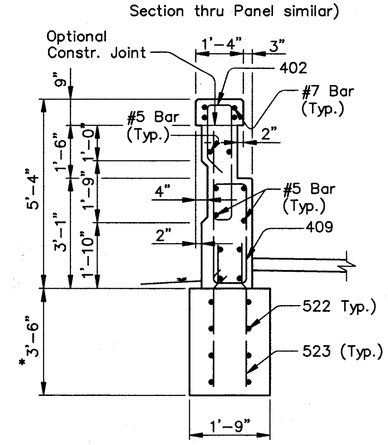

SECTION R–R
(Fence Post not shown)

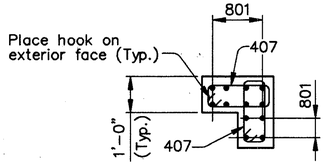

SECTION E–E

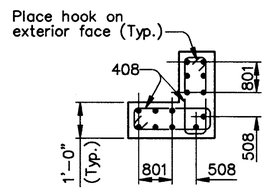

SECTION G–G

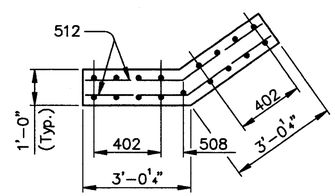

SECTION J–J

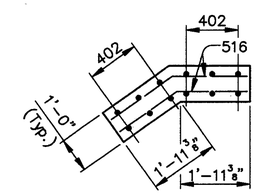

SECTION L–L

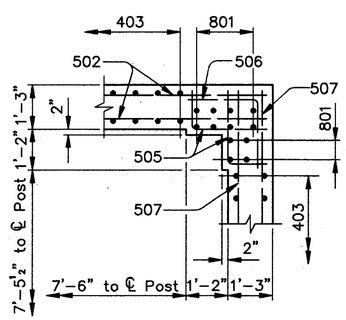

SECTION F–F

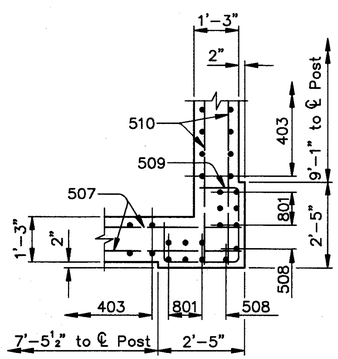

SECTION H–H

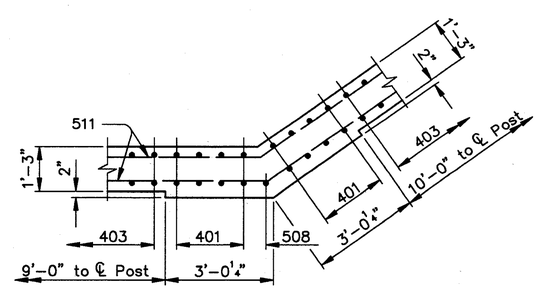

SECTION K–K

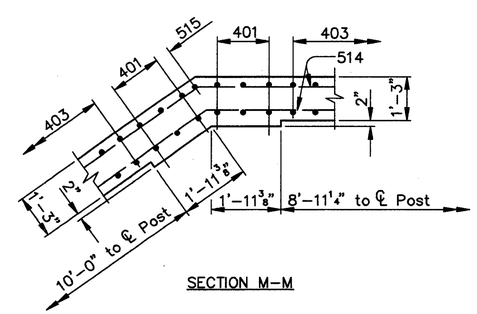

SECTION M–M

Notes:
For Sections A–A thru D–D, and Misc. Railing Details, see Sheet 221/270.
For Fence Details, see Sheet 220/270.
E.F. denotes Each Face N.F. denotes Near Face
F.F. denotes Far Face

COUNTY BRIDGE NO. 84

HOWARD NEEDLES TAMMEN & BERGENDOFF
ARCHITECTS ENGINEERS PLANNERS
HNTB

SOUTH RAILING – EAST SIDE STATION
BR. NO. CUY – 6 – 1499
REHABILITATION OF
VETERANS MEMORIAL BRIDGE
(U.S. 6, 20, 42 & S.R. 3 OVER CUYAHOGA RIVER)
CLEVELAND CUYAHOGA COUNTY OHIO

DRAWN J.L.V.	TRACED J.L.V.	CHECKED W.D.D.	REVIEWED C.A.B.	REVISED
DATE 3/22/94	DATE 3/22/94	DATE 3/30/94	DATE 4/07/94	SHEET 219/270

\11646\CONCRETE\RAILS5.DWG

FHWA REGION	STATE	PROJECT	
5	OHIO		

353/412

CUYAHOGA COUNTY
CUY - 6 - 14.99

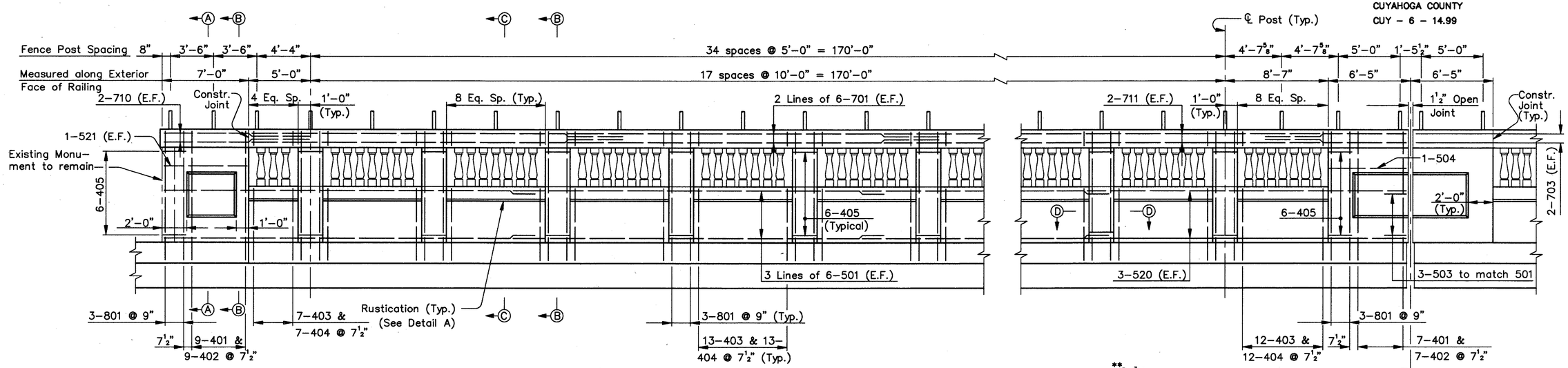

NORTH RAILING - EAST SIDE STATION

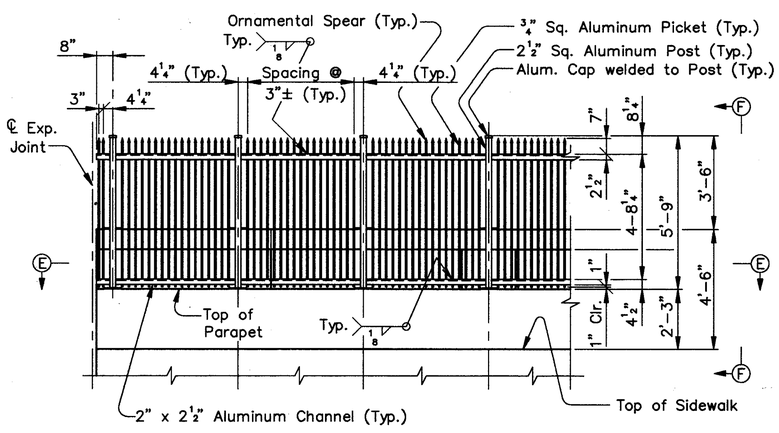

TYPICAL FENCE ELEVATION
(Balusters not shown)

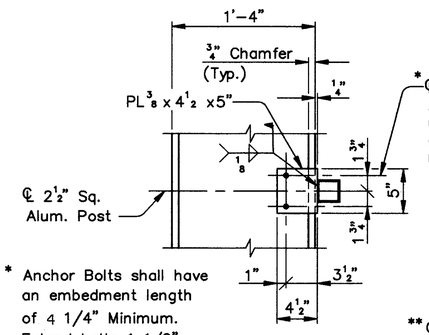

* Anchor Bolts shall have an embedment length of 4 1/4" Minimum. Extend bolts 1 1/2" above the concrete.

SECTION G-G

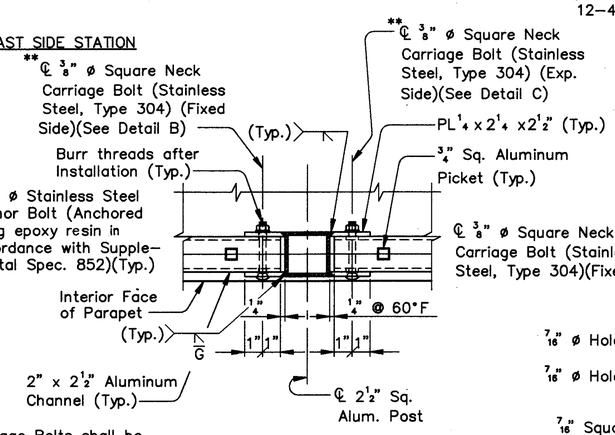

** Carriage Bolts shall be vertically centered on 1/4" x 2 1/4" x 2 1/2" Plates

POST CONNECTION DETAIL

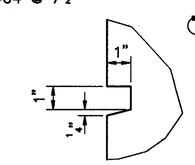

DETAIL A

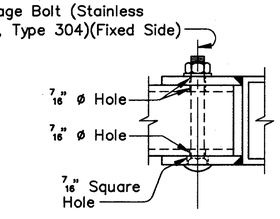

DETAIL B

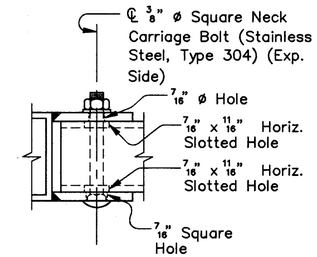

DETAIL C

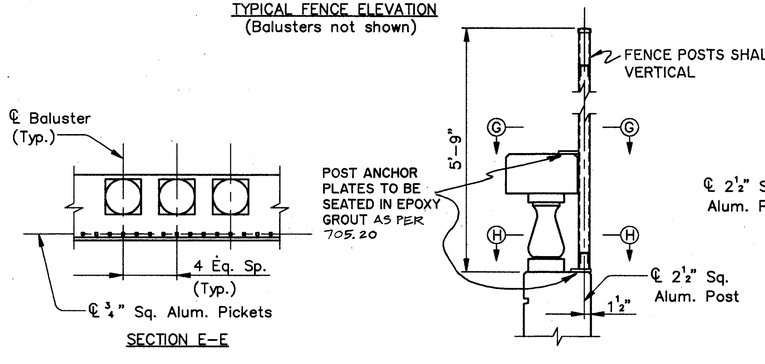

Note: Epoxy resin shall be as per 705.20.

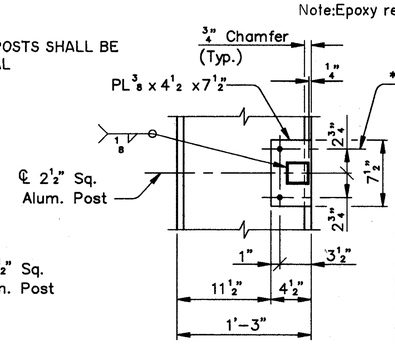

SECTION H-H

Note: Before any anchor holes are drilled, the location of the existing rebars shall be found and marked by use of a rebar locator. If an existing bar is found at the same location as the dowel hole, the dowel hole shall be moved to either side of the bar so as not to damage the rebar. No core drilling shall be allowed..

Pay Item Notes:
All reinforcement for the Railing, except 401, 403, and 801 Bars shall be included with the Railing, for payment.

All concrete above the sidewalk and footing surface shall be included with the Railing for payment.

MINIMUM SPLICE LENGTH	
BAR	LENGTH
# 4	1'-9"
# 5	2'-0"
# 6	3'-0"
# 7	4'-8"

ALL REINFORCING BAR MARKS SHALL BE PREFIXED AS FOLLOWS:
EAST SIDE STATION - ESER

Fencing Notes:
All Fencing material shall be Aluminum except as noted.

The 2-1/2" Sq. Aluminum Posts shall have a wall thickness of .120" and shall have a unit weight of 1.37 Lbs. per ft.

The 3/4" Sq. Aluminum Pickets shall have a wall thickness of .083" and shall have a unit weight of 0.27 Lbs. per ft.

The 2" x 2-1/2" Aluminum Channels shall have a unit weight of 1.49 Lbs. per ft.

The Ornamental Spears may be formed or may be an Aluminum cap welded to the Aluminum Tube.

ALL ANCHOR PLATE AND CHANNEL HOLES MAY BE ELONGATED AS NECESSARY FOR FIT UP.

Notes:
For Sections A-A thru D-D, and Misc. Railing Details, see Sheet 221/270.
E.F. denotes Each Face

COUNTY BRIDGE NO. 84 REVISED D-12 7/1/94

HOWARD NEEDLES TAMMEN & BERGENDOFF
ARCHITECTS ENGINEERS PLANNERS
HNTB

NORTH RAILING - EAST SIDE STATION AND FENCE DETAILS
BR. NO. CUY - 6 - 1499
REHABILITATION OF
VETERANS MEMORIAL BRIDGE
(U.S. 6, 20, 42 & S.R. 3 OVER CUYAHOGA RIVER)
CLEVELAND CUYAHOGA COUNTY OHIO

DRAWN J.L.V.	TRACED J.L.V.	CHECKED W.D.D.	REVIEWED C.A.B.	REVISED
DATE 3/22/94	DATE 3/22/94	DATE 3/30/94	DATE 4/07/94	SHEET 220/270

\\11646\CONCRETE\RAILS5.DWG

FHWA REGION	STATE	PROJECT	
5	OHIO		

354
412

CUYAHOGA COUNTY
CUY – 6 – 14.99

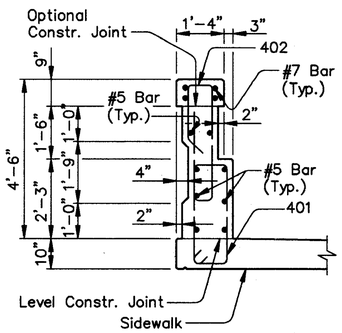

SECTION A–A
(Sidewalk Reinforcing and Fence Post not shown)

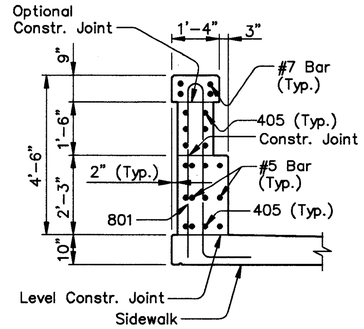

SECTION B–B
(Sidewalk Reinforcing and Fence Post not shown)
(Section thru Post shown, Section thru Panel similar)

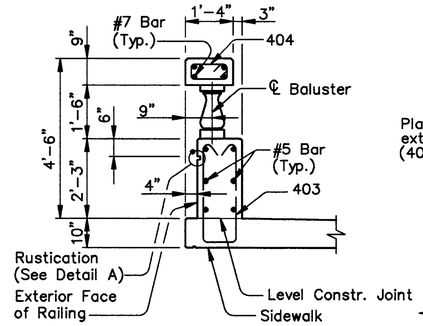

SECTION C–C
(Sidewalk Reinforcing and Fence Post not shown)

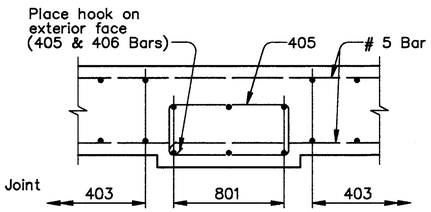

SECTION D–D

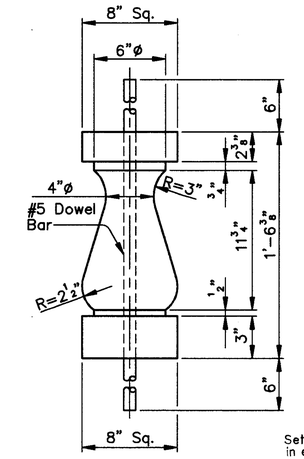

BALUSTER DETAIL

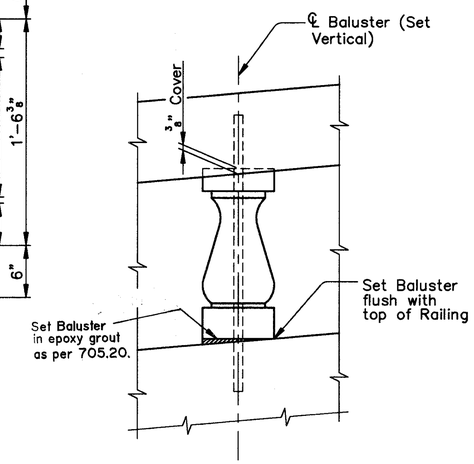

BALUSTER PLACEMENT DETAIL

Note:
Field bend 801 bars as required to clear Conduit Expansion Jt. Fittings.

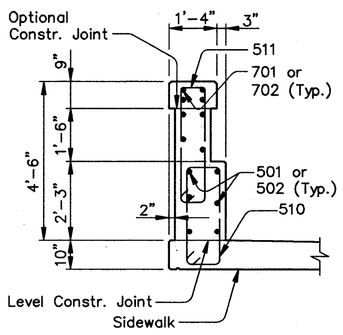

SECTION E–E
(Sidewalk Reinforcing and Fence Post not shown)

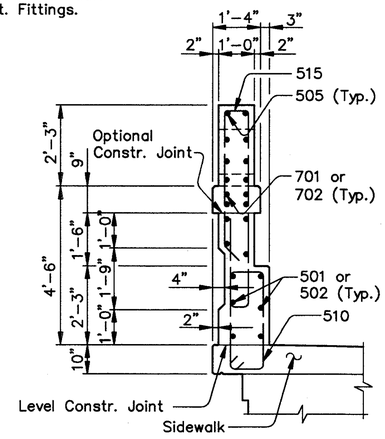

SECTION F–F
(Sidewalk Reinforcing and Fence Post not shown)

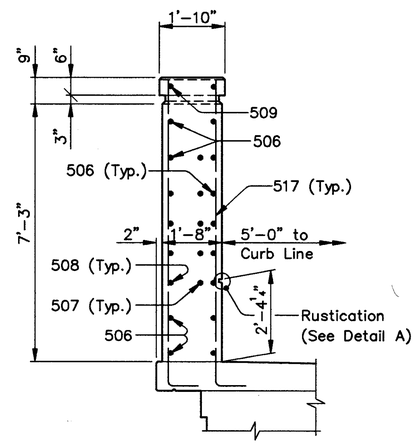

SECTION G–G
(Sidewalk Reinforcing not shown)

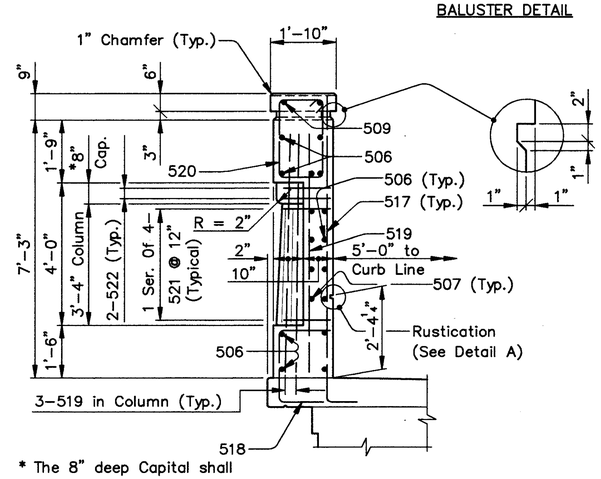

* The 8" deep Capital shall have a radius of 8".

SECTION H–H
(Sidewalk Reinforcing not shown)

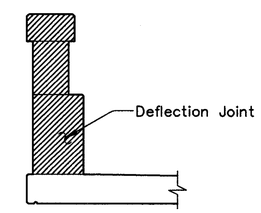

DEFLECTION JOINT DETAIL

Note:
Preformed Expansion Joint Material in the Railing Deflection Joints may be either 1/4" Gray Sponge Rubber or 1/4" Gray Cellular Polyvinyl Chloride (PVC) Sponge. Either material shall meet the requirements of AASHTO M–153, Type 1, except the density of PVC Sponge shall not be less than 20 Lbs. per Cu. Ft.

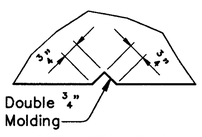

FALSE JOINT DETAIL

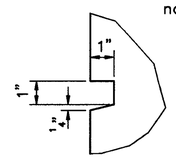

DETAIL A

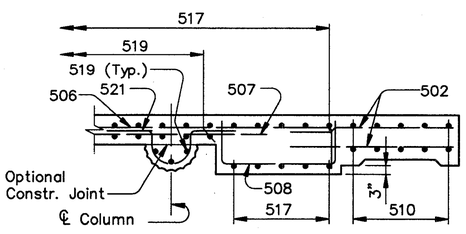

SECTION J–J

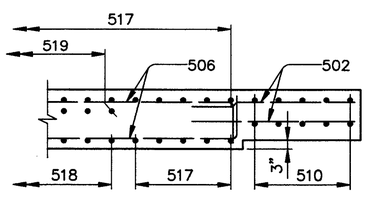

SECTION K–K

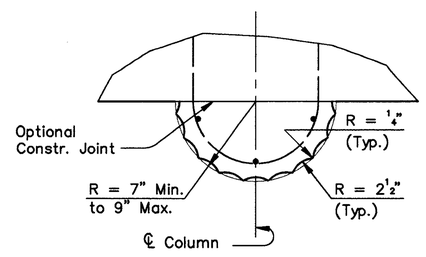

SECTION THRU COLUMN

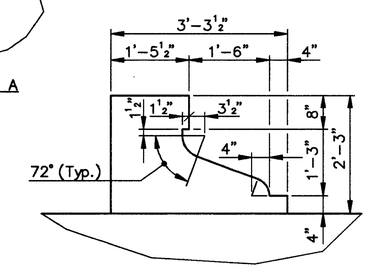

DETAIL B

Note:
For Fence Details, see Sheet 220/270.
2"ø conduit not shown in all Sections.

COUNTY BRIDGE NO. 84

HOWARD NEEDLES TAMMEN & BERGENDOFF
ARCHITECTS ENGINEERS PLANNERS
HNTB

RAILING DETAILS
BR. NO. CUY – 6 – 1499
REHABILITATION OF
VETERANS MEMORIAL BRIDGE
(U.S. 6, 20, 42 & S.R. 3 OVER CUYAHOGA RIVER)
CLEVELAND CUYAHOGA COUNTY OHIO

DRAWN J.L.V.	TRACED J.L.V.	CHECKED W.D.D.	REVIEWED C.A.B.	REVISED
DATE 3/15/94	DATE 3/15/94	DATE 3/31/94	DATE 4/07/94	SHEET 221/270

REVISED D-12 7/1/94

\11646\CONCRETE\RAILSD1.DWG

FHWA REGION	STATE	PROJECT	
5	OHIO		

355/412

CUYAHOGA COUNTY
CUY – 6 – 14.99

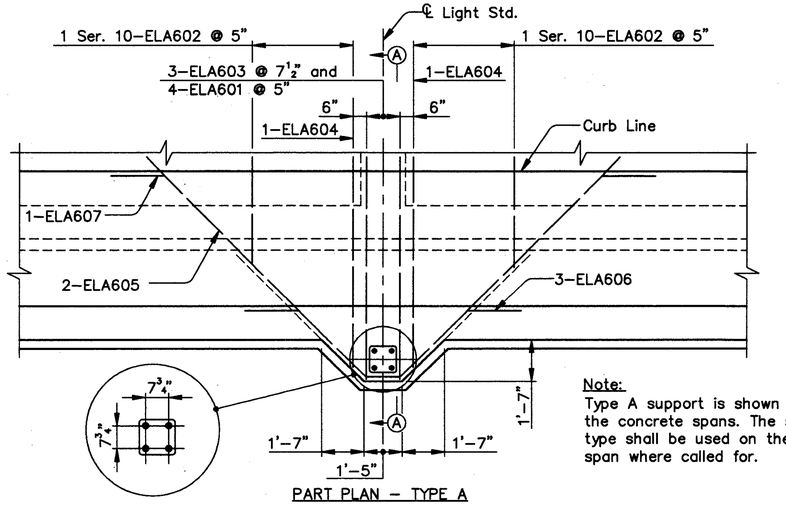

PART PLAN – TYPE A

Note:
Type A support is shown for the concrete spans. The same type shall be used on the steel span where called for.

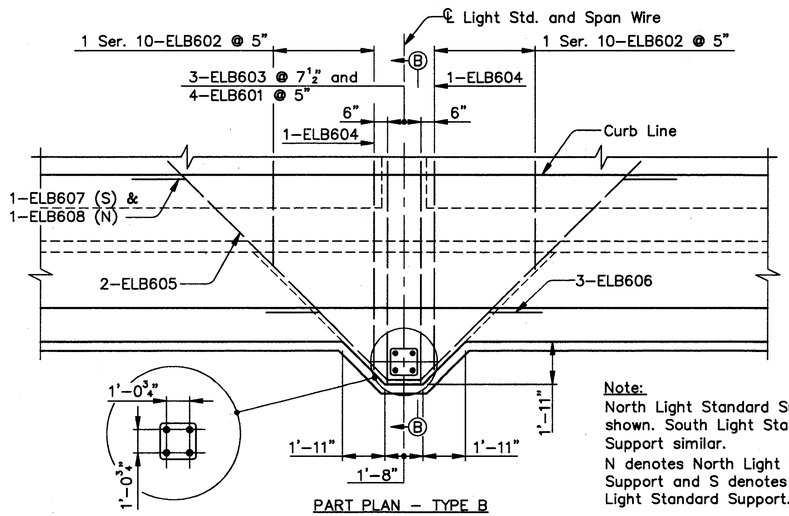

PART PLAN – TYPE B

Note:
North Light Standard Support shown. South Light Standard Support similar.
N denotes North Light Standard Support and S denotes South Light Standard Support.

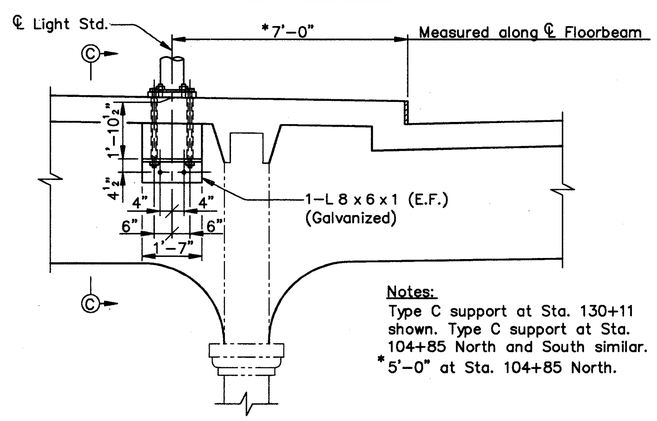

PART ELEVATION – TYPE C

Notes:
Type C support at Sta. 130+11 shown. Type C support at Sta. 104+85 North and South similar.
*5'–0" at Sta. 104+85 North.

Note A:
After the Strain Pole has been erected and prior to placing the span wires and signs fill the gap between the pole base plate and the parapet with the non–shrink grout.

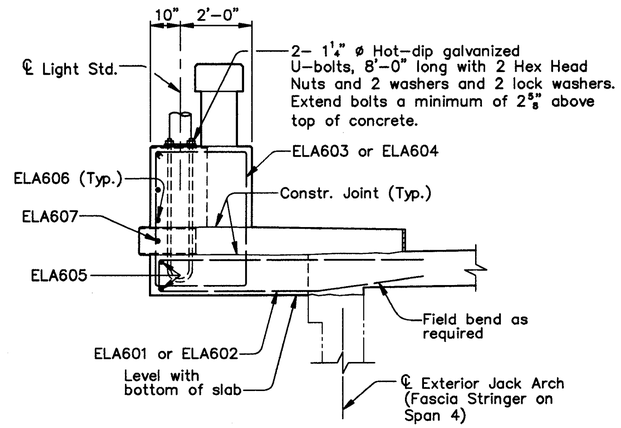

SECTION A–A

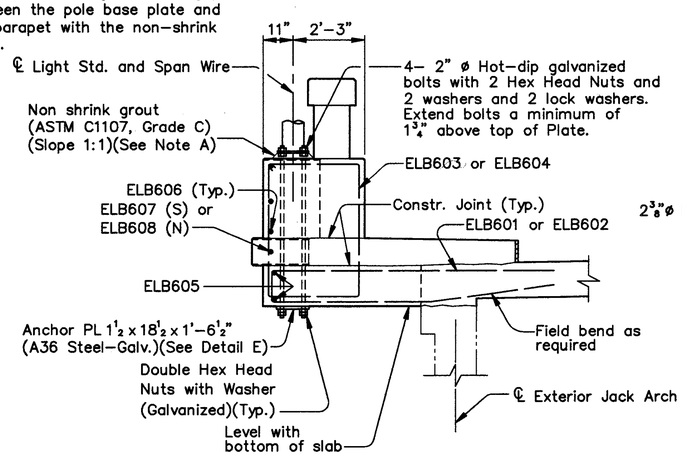

SECTION B–B

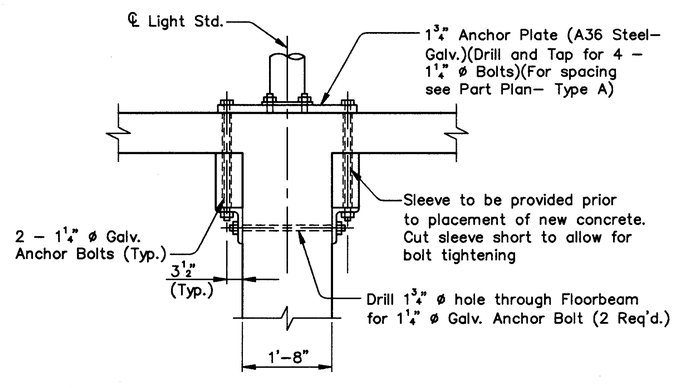

SECTION C–C

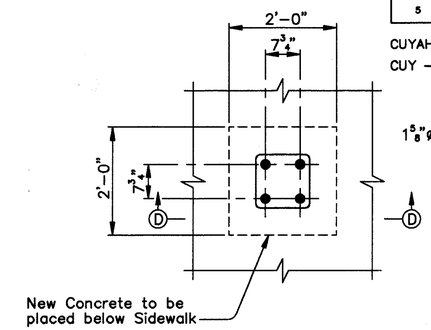

PART PLAN – TYPE D

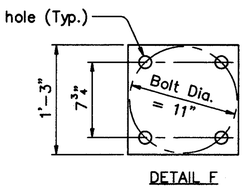

DETAIL F

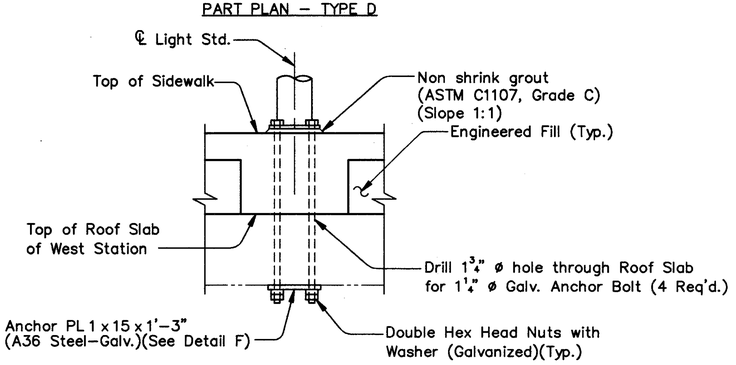

SECTION D–D

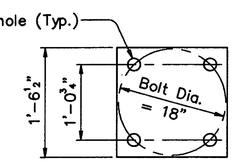

DETAIL E

Note:
The Type A, C and D light support details shown are based on an assumed bolt circle diameter of 11".
The bolt circle diameter shall be adjusted as required to coordinate with the light pole design actually used.
If the bolt circle diameter differs from 11", the details on this sheet shall be adjusted accordingly, as approved by the Engineer.

Pay Item Notes:
All angles, plates, sleeves and bolts shall be included with Item 513 for payment.

All reinforcement for the Light Standard Supports, Type A, B and E shall be included with the Railing for payment.

Notes:
For Light Standard Type E, see Sheet 212/270.

For additional Strain Pole details (Type B) see Standard Construction Dwg. No. TC–81.10.

For additional Pole Base Plate details (Types A, C, D, and E) see Standard Construction Dwg. No. HL–10.13.

ALL REINFORCING BAR MARKS FOR LIGHT STANDARD SUPPORT TYPE A SHALL BE PREFIXED ELA

ALL REINFORCING BAR MARKS FOR LIGHT STANDARD SUPPORT TYPE B SHALL BE PREFIXED ELB

LIGHT SUPPORT LOCATIONS

STA.	TYPE	
	North Side	South Side
103+00.00	E	D
104+85.00	C	C
106+45.00	A	A
108+18.13	A	A
109+94.63	A	A
111+52.34	A	A
113+24.81	A	A
114+97.19	A	A
116+69.56	A	A
118+37.75	A	A
120+03.88	A	A
121+70.00	A	A
123+36.13	A	A
124+97.50	A	A
126+67.75	A	A
128+41.00	B	B
130+11.00	A	C

COUNTY BRIDGE NO. 84

HOWARD NEEDLES TAMMEN & BERGENDOFF
ARCHITECTS ENGINEERS PLANNERS
HNTB

LIGHT STANDARD DETAILS
BR. NO. CUY – 6 – 1499
REHABILITATION OF
VETERANS MEMORIAL BRIDGE
(U.S. 6, 20, 42 & S.R. 3 OVER CUYAHOGA RIVER)
CLEVELAND CUYAHOGA COUNTY OHIO

DRAWN J.L.V.	TRACED J.L.V.	CHECKED N.C.	REVIEWED C.A.B.	REVISED
DATE 5/31/94	DATE 5/31/94	DATE 5/31/94	DATE 6/06/94	SHEET 222/270

\11646\CONCRETE\LSTDDETS.DWG

FHWA REGION	STATE	PROJECT	
5	OHIO		

356/412

CUYAHOGA COUNTY
CUY – 6 – 14.99

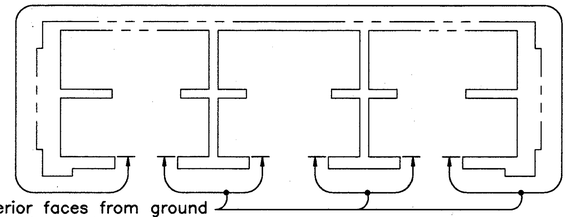

BELOW LOWER DECK

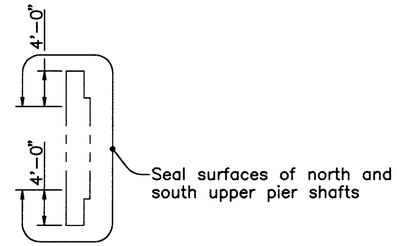

ABOVE LOWER DECK

SEALING OF CONCRETE SURFACES
PIERS 3 AND 4

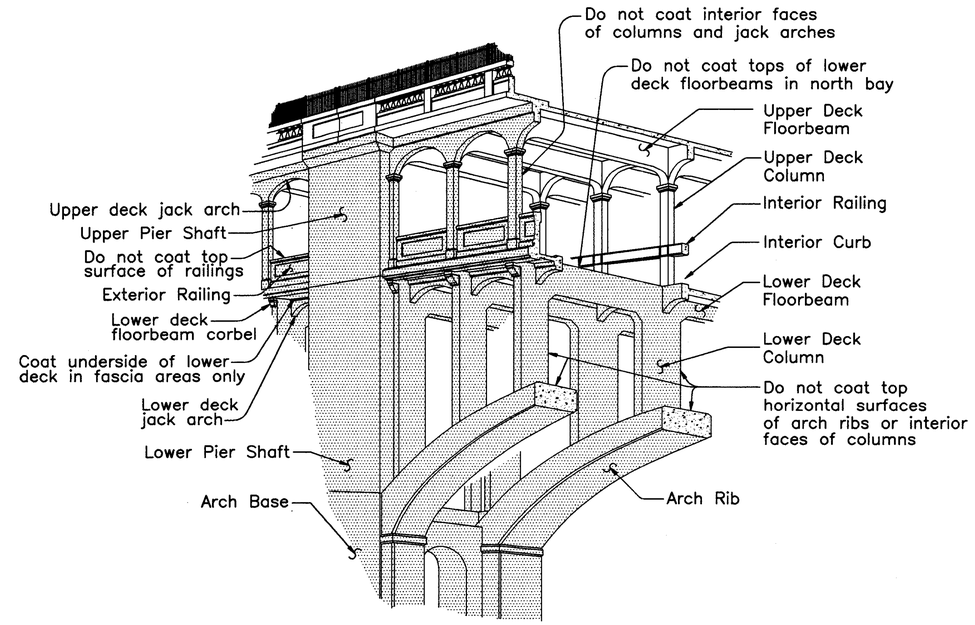

SEALING OF CONCRETE SURFACES
TYPICAL APPROACH SPAN

– Denotes areas to be sealed with an epoxy–urethane sealer, in addition to the areas listed in general note 42, sheet 13/270. The section shown applies for spans 1 thru 3 and 5 thru 13 and includes the walls atop the arch ribs below the lower deck in Span 12 and the entire north wall below the lower deck in span 13.

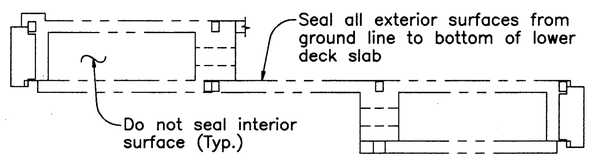

BELOW LOWER DECK

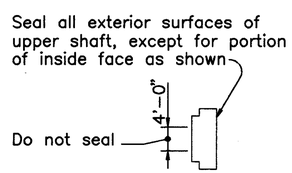

ABOVE LOWER DECK

SEALING OF CONCRETE SURFACES
PIERS 11 AND 12

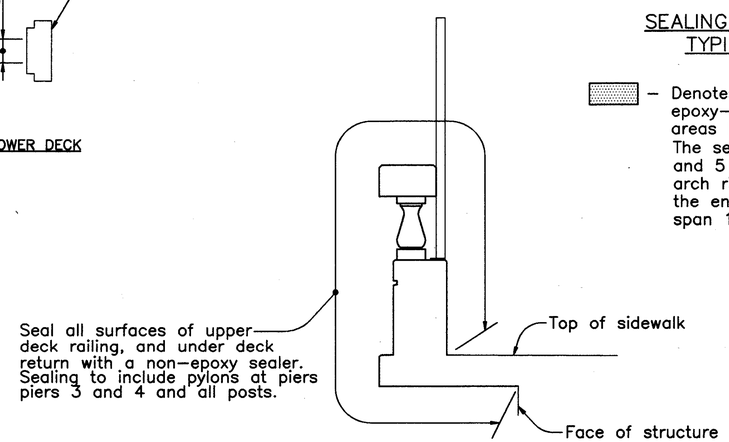

SEALING OF CONCRETE SURFACES
UPPER DECK RAILING

COUNTY BRIDGE NO. 84

HOWARD NEEDLES TAMMEN & BERGENDOFF
ARCHITECTS ENGINEERS PLANNERS
HNTB

SEALING OF CONCRETE SURFACES
BR. NO. CUY – 6 – 1499
REHABILITATION OF
VETERANS MEMORIAL BRIDGE
(U.S. 6, 20, 42 & S.R. 3 OVER CUYAHOGA RIVER)
CLEVELAND CUYAHOGA COUNTY OHIO

DRAWN B.E.B.	TRACED C.M.M.	CHECKED W.D.D.	REVIEWED C.A.B.	REVISED
DATE 5/4/94	DATE 6/1/94	DATE 6/1/94	DATE 6/6/94	SHEET 223/270

\11646\STNDSHT.DWG

FHWA REGION	STATE	PROJECT	
5	OHIO		

357
412

CUYAHOGA COUNTY
CUY – 6 – 14.99

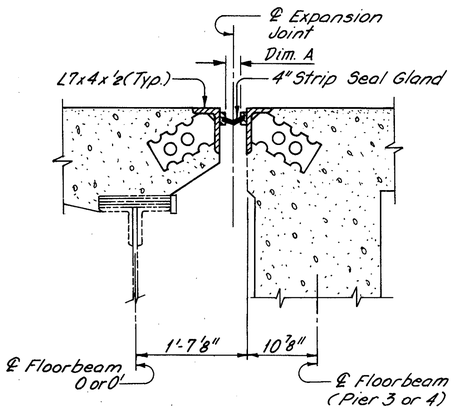

TYPICAL SECTION
AT PANEL POINTS 0 AND 0'

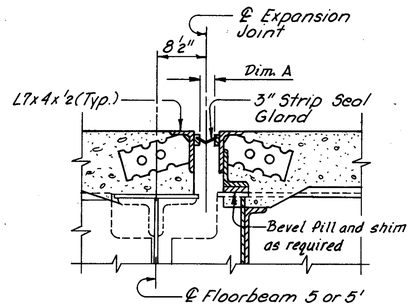

TYPICAL SECTION
AT PANEL POINTS 5 AND 5'

SPAN 4
(Reinforcement not shown)

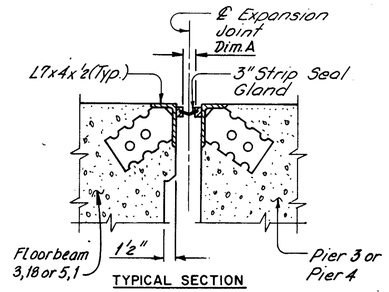

TYPICAL SECTION
AT PIERS 3 AND 4

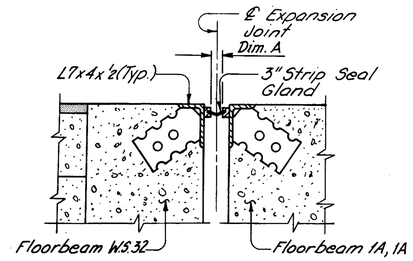

TYPICAL SECTION
AT TOWER A

APPROACH SPANS
(Reinforcement not shown)

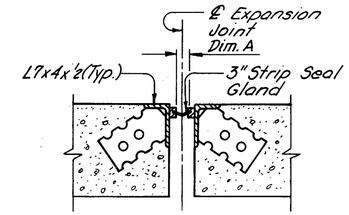

TYPICAL SECTION
TOWER B, ABUTMENTS AND PIERS 1, 2, 5, THRU 10
(Piers 11 and 12 similar, refer to sheet 205/270 for cross section thru joint at these locations)

UPPER DECK EXPANSION JOINTS

TABLE OF EXPANSION JOINT OPENINGS TOWERS, ABUTMENTS, PIERS 3*,4*, AND 10 THRU 12	
TEMPERATURE	DIMENSION A
30° F	2–3/16"
40° F	2–1/8"
50° F	2–1/16"
60° F	2"
70° F	1–15/16"
80° F	1–7/8"
90° F	1–13/16"

*Span 3 side of pier 3 and Span 5 side of pier 4

TABLE OF EXPANSION JOINT OPENINGS PIERS 1,2,3^,4^ AND 5 THRU 9	
TEMPERATURE	DIMENSION A
30° F	2–3/8"
40° F	2–1/4"
50° F	2–1/8"
60° F	2"
70° F	1–7/8"
80° F	1–3/4"
90° F	1–5/8"

^Span 4 side of pier 3 and pier 4

TABLE OF EXPANSION JOINT OPENINGS SPAN 4 FLOORBEAMS 5 AND 5'	
TEMPERATURE	DIMENSION A
30° F	2–9/16"
40° F	2–3/8"
50° F	2–3/16"
60° F	2"
70° F	1–13/16"
80° F	1–5/8"
90° F	1–7/16"

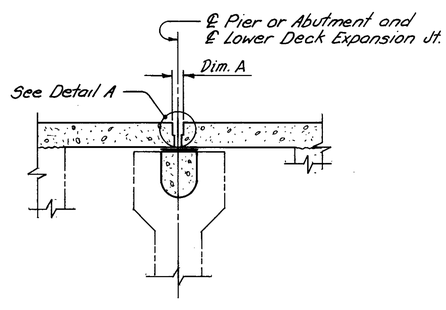

TYPICAL SECTION
LOWER DECK EXPANSION JOINT
(Compression seal not shown)
(Existing pier wall shown, new pier wall similiar)

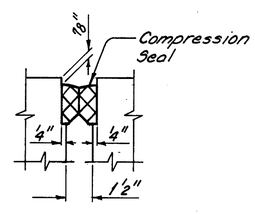

DETAIL A

LOWER DECK EXPANSION JOINTS

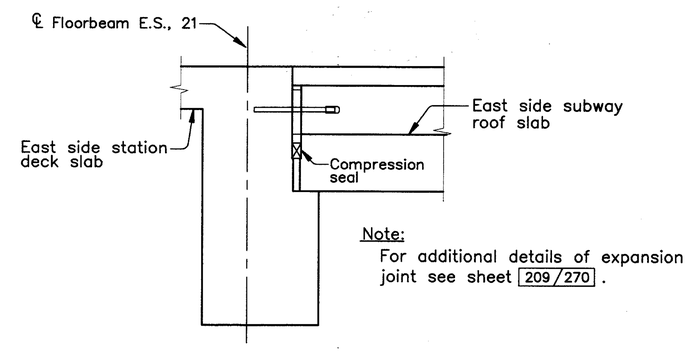

Note:
For additional details of expansion joint see sheet 209/270.

TYPICAL SECTION
EXPANSION JOINT AT EAST SIDE STATION
FLOORBEAM E.S.,21

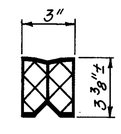

PREFORMED ELASTOMERIC
COMPRESSION JOINT SEAL

NOTE:
FOR ADDITIONAL STRIP SEAL EXPANSION JOINT DETAILS, REFER TO O.D.O.T. STANDARD DRAWING EXJ–4–87.

COUNTY BRIDGE NO. 84

HOWARD NEEDLES TAMMEN & BERGENDOFF
ARCHITECTS ENGINEERS PLANNERS
HNTB

DECK EXPANSION JOINT DETAILS
BR. NO. CUY – 6 – 1499
REHABILITATION OF
VETERANS MEMORIAL BRIDGE
(U.S. 6, 20, 42 & S.R. 3 OVER CUYAHOGA RIVER)
CLEVELAND CUYAHOGA COUNTY OHIO

DRAWN C.K.B.	TRACED J.L.V.	CHECKED W.J.V.	REVIEWED C.A.B.	REVISED
DATE 5/8/92	DATE 5/12/92	DATE 5/15/92	DATE 4/8/94	SHEET 224/270

FHWA REGION	STATE	PROJECT	
5	OHIO		

358/412

CUYAHOGA COUNTY
CUY – 6 – 14.99

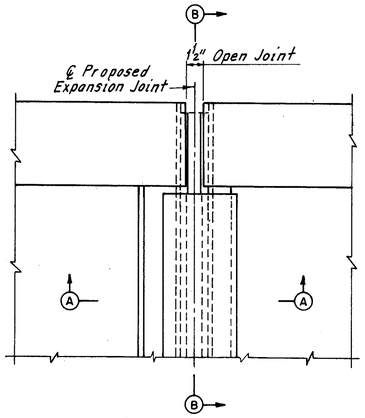

PLAN AT RAILING

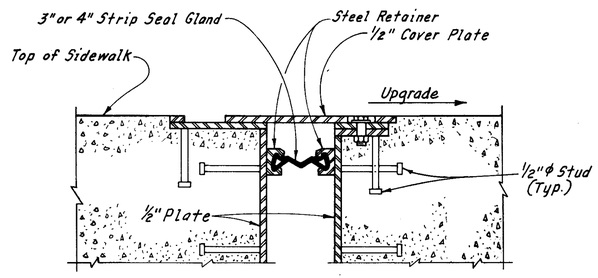

SECTION A–A

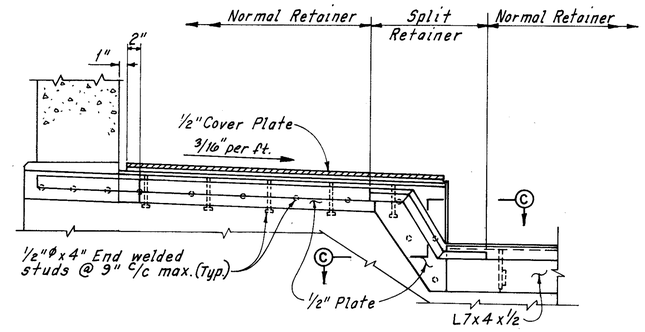

SECTION B–B

Note:
All sidewalk plates shall be included with the expansion joint for payment.

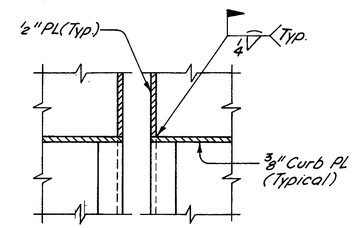

SECTION C–C
(Retainers and seal not shown)

SIDEWALK EXPANSION JOINT DETAILS

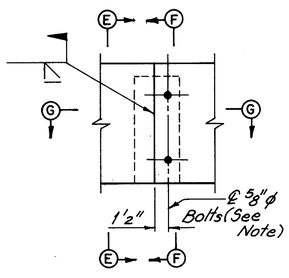

ELEVATION

Note:
Remove bolts after field welds have been completed. Plug weld holes flush with curb plate.

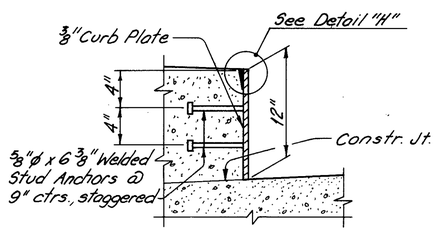

SECTION E–E

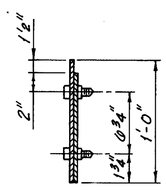

SECTION F–F

MEDIAN CURB PLATE – SPAN 4

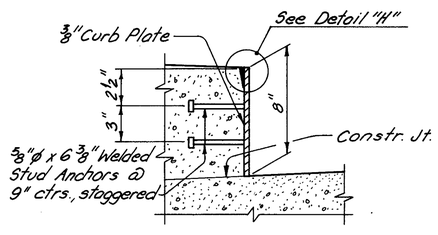

SECTION E–E

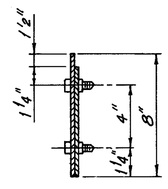

SECTION F–F

SIDEWALK CURB PLATE

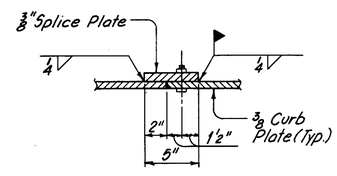

SECTION G–G

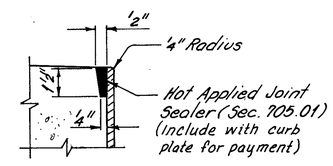

DETAIL H

Note:
All steel curb plates including stud anchors shall be included with item 513 structural steel (AISC certification not required) for payment. Temporary bolts shall not be considered as pay weight.

NOTE:
FOR ADDITIONAL STRIP SEAL EXPANSION JOINT DETAILS, REFER TO O.D.O.T. STANDARD DRAWING EXJ–4–87.

CURB PLATE DETAILS

COUNTY BRIDGE NO. 84

HOWARD NEEDLES TAMMEN & BERGENDOFF
ARCHITECTS ENGINEERS PLANNERS
HNTB

SIDEWALK EXPANSION JOINT AND CURB PLATE DETAILS
BR. NO. CUY – 6 – 1499
REHABILITATION OF
VETERANS MEMORIAL BRIDGE
(U.S. 6, 20, 42 & S.R. 3 OVER CUYAHOGA RIVER)
CLEVELAND CUYAHOGA COUNTY OHIO

DRAWN C.K.B.	TRACED J.L.V.	CHECKED W.J.V.	REVIEWED C.A.B.	REVISED
DATE 5/8/92	DATE 5/13/92	DATE 5/15/92	DATE 4/6/94	SHEET 225/270

FHWA REGION	STATE	PROJECT	
5	OHIO		

359/412

CUYAHOGA COUNTY
CUY – 6 – 14.99

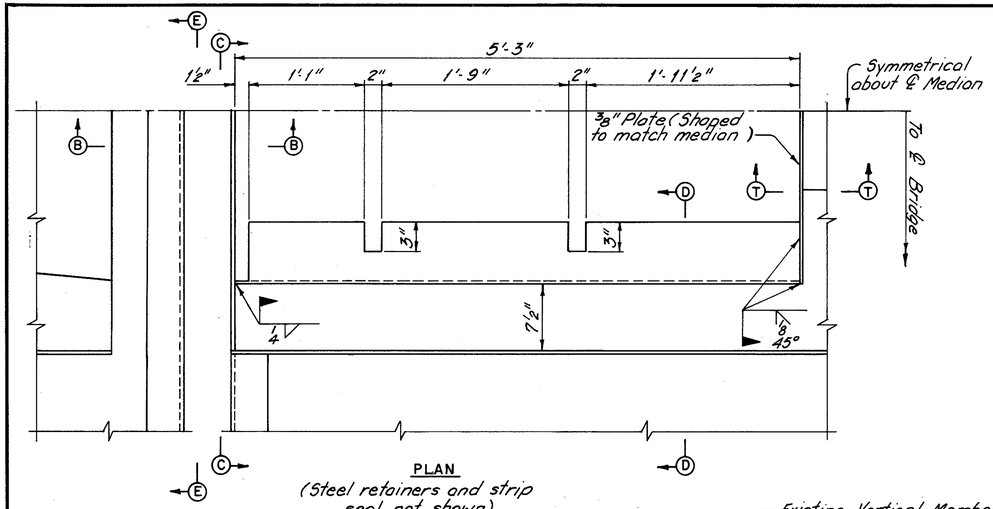

PLAN
(Steel retainers and strip seal not shown)

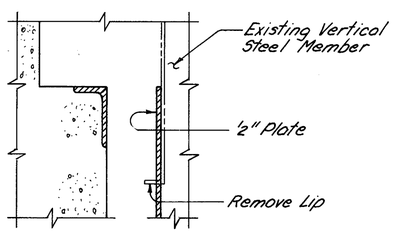

SECTION B-B
(Steel retainers, strip seal and reinforcement not shown)

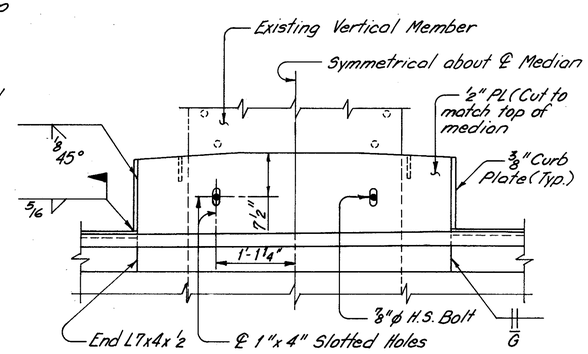

SECTION C-C

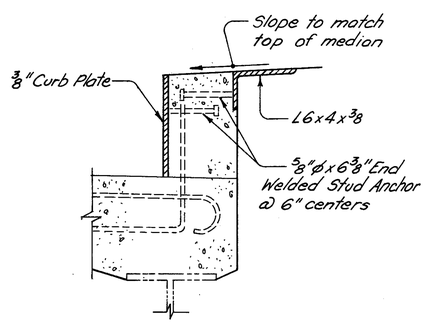

SECTION D-D

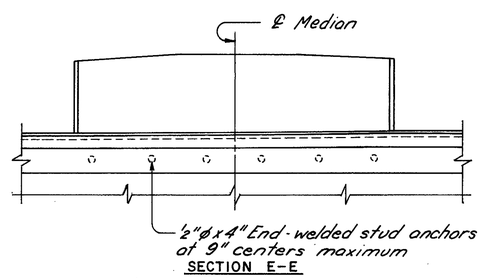

SECTION E-E
(For details not shown, see Section C-C)

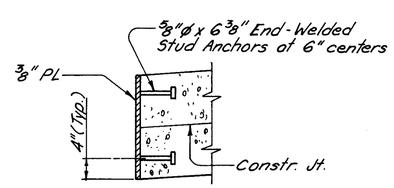

SECTION T-T

MEMBER $U_0 L_0$

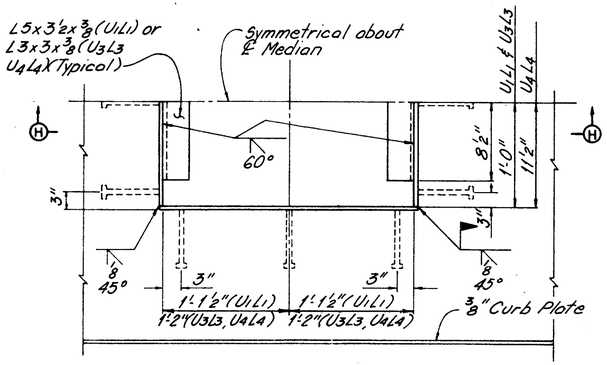

PLAN

MEMBERS $U_1 L_1$, $U_3 L_3$, $U_4 L_4$
(Section H-H, same as for member $U_2 L_2$)

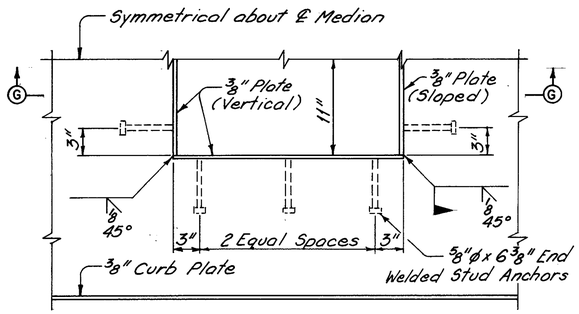

PLAN

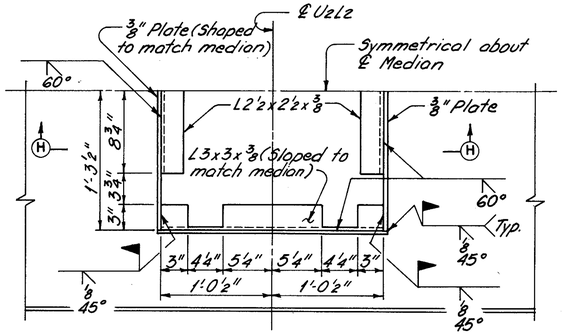

PLAN

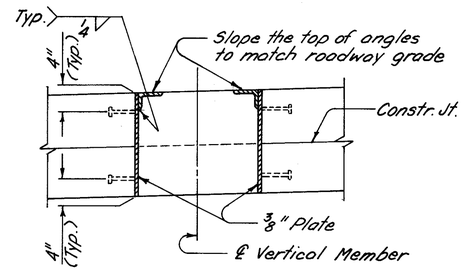

SECTION H-H

MEMBER $U_2 L_2$

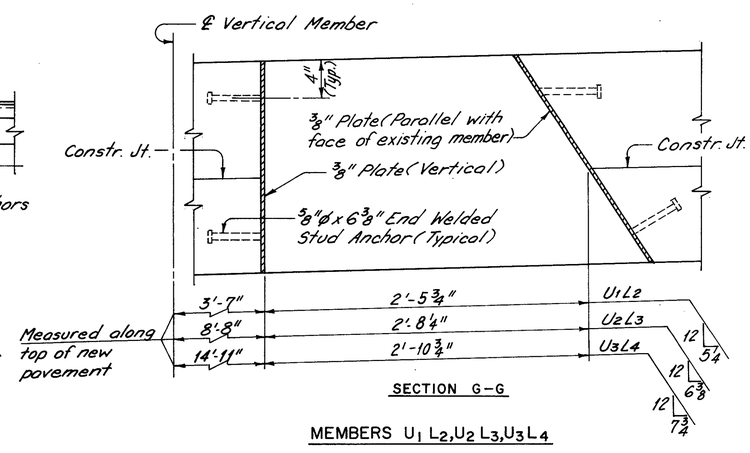

SECTION G-G

MEMBERS $U_1 L_2$, $U_2 L_3$, $U_3 L_4$

Note:
All steel plates including stud anchors shall be included with Item 513, Structural Steel (AISC Certification not required) for payment.

COUNTY BRIDGE NO. 84

HOWARD NEEDLES TAMMEN & BERGENDOFF
ARCHITECTS ENGINEERS PLANNERS
HNTB

DECK OPENING DETAILS
SPAN 4
BR. NO. CUY – 6 – 1499
REHABILITATION OF
VETERANS MEMORIAL BRIDGE
(U.S. 6, 20, 42 & S.R. 3 OVER CUYAHOGA RIVER)
CLEVELAND CUYAHOGA COUNTY OHIO

DRAWN C.K.B.	TRACED J.L.V.	CHECKED W.J.V.	REVIEWED C.A.B.	REVISED
DATE 5/8/92	DATE 5/8/92	DATE 5/15/92	DATE 4/8/94	SHEET 226/270

FHWA REGION	STATE	PROJECT	
5	OHIO		

360/412

CUYAHOGA COUNTY
CUY – 6 – 14.99

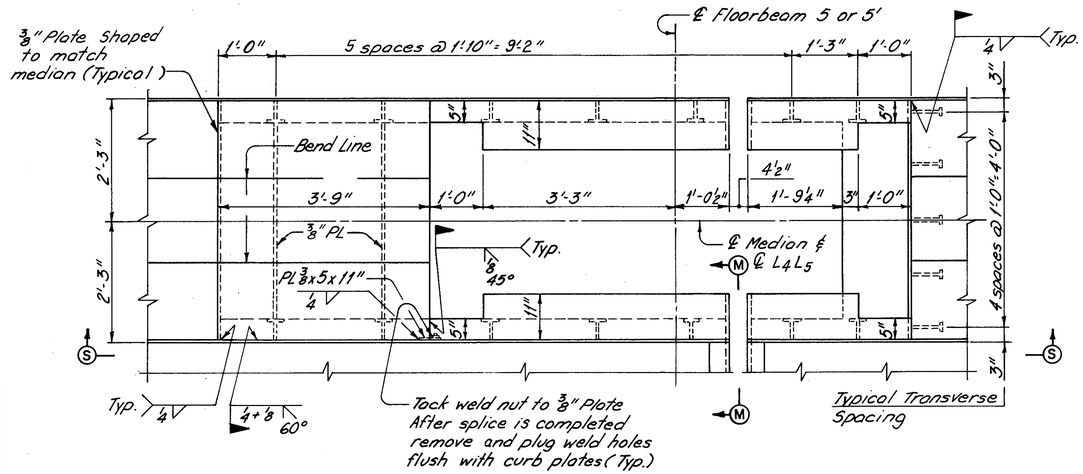

PLAN

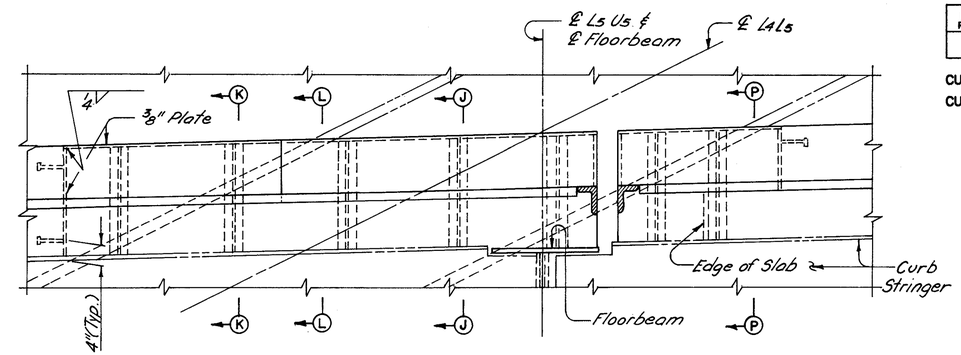

SECTION S–S
(Steel retainers and strip seal not shown)

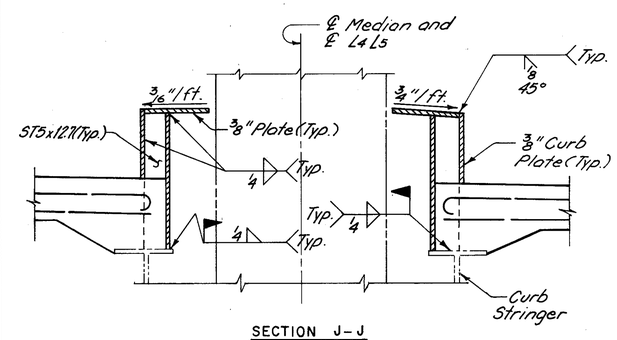

SECTION J–J

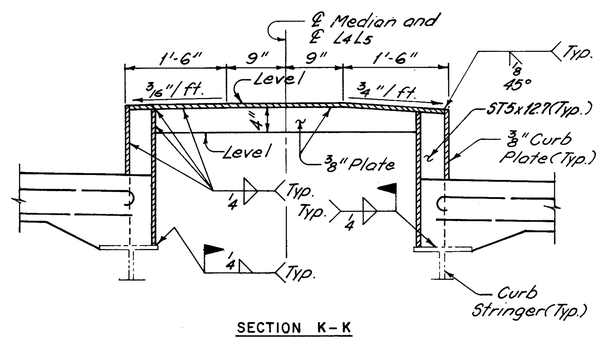

SECTION K–K

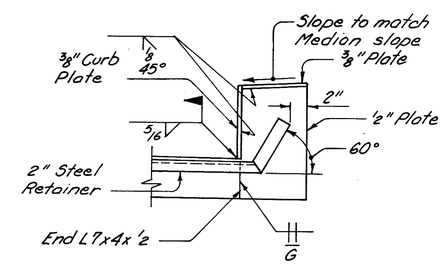

SECTION M–M

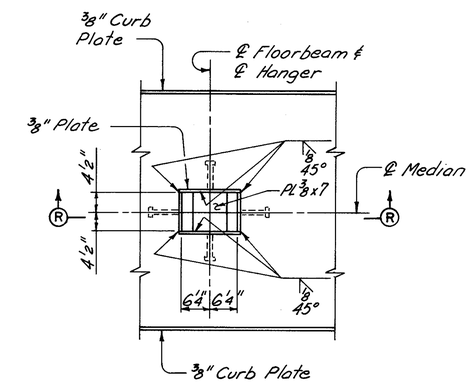

PART PLAN

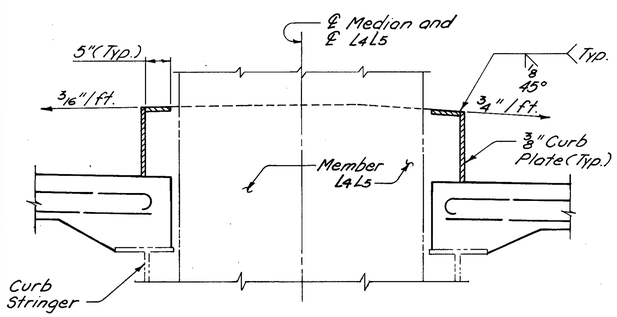

SECTION L–L

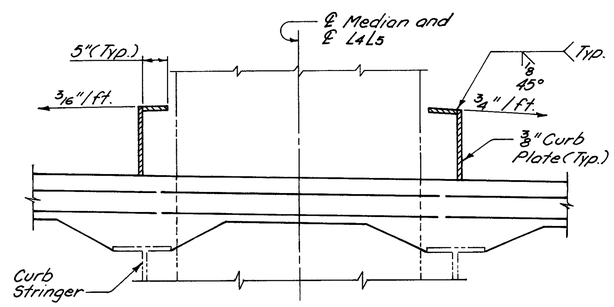

SECTION P–P

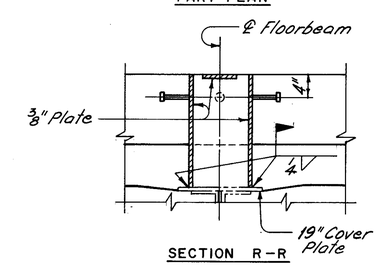

SECTION R–R

VERTICAL MEMBER AT FLOORBEAM 6 THRU 6'

MEMBER L4L5

Note:
All studs are 5/8" ø x 6 3/8" End-welded stud anchors.

Note:
All steel plates including stud anchors shall be included with Item 513, Structural Steel (AISC Certification not required) for payment.

COUNTY BRIDGE NO. 84

HOWARD NEEDLES TAMMEN & BERGENDOFF
ARCHITECTS ENGINEERS PLANNERS
HNTB

DECK OPENING DETAILS
SPAN 4
BR. NO. CUY – 6 – 1499
REHABILITATION OF
VETERANS MEMORIAL BRIDGE
(U.S. 6, 20, 42 & S.R. 3 OVER CUYAHOGA RIVER)
CLEVELAND CUYAHOGA COUNTY OHIO

DRAWN C.K.B.	TRACED J.L.V.	CHECKED W.J.V.	REVIEWED C.A.B.	REVISED
DATE 5/8/92	DATE 5/11/92	DATE 5/15/92	DATE 4/6/94	SHEET 227/270

FHWA REGION	STATE	PROJECT	
5	OHIO		

361/412

CUYAHOGA COUNTY
CUY – 6 – 14.99

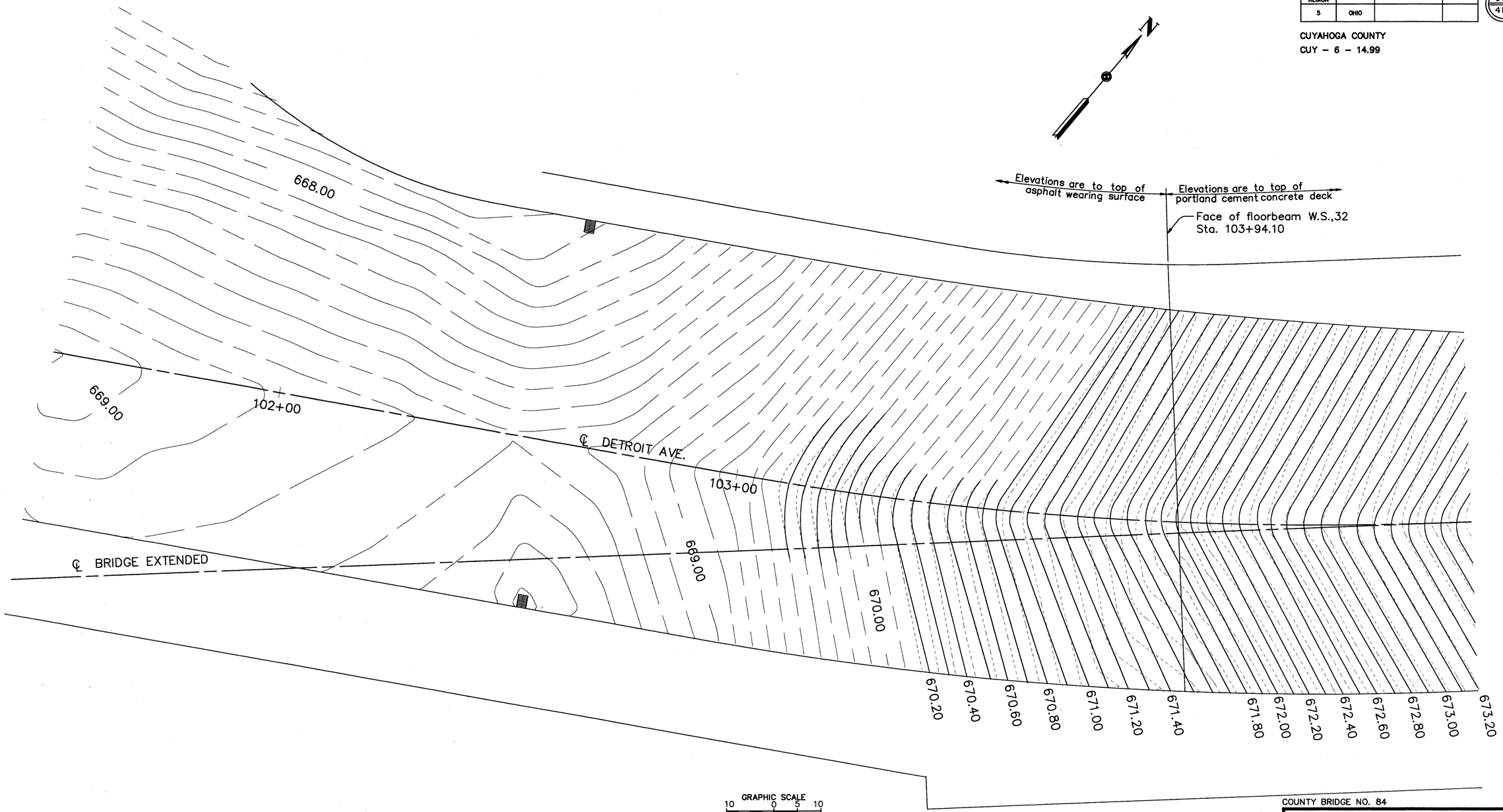

GRAPHIC SCALE
10 0 5 10
HORIZONTAL SCALE IN FEET

COUNTY BRIDGE NO. 84

HOWARD NEEDLES TAMMEN & BERGENDOFF
ARCHITECTS ENGINEERS PLANNERS
HNTB

WEST APPROACH PAVEMENT CONTOURS

BR. NO. CUY – 6 – 1499
REHABILITATION OF
VETERANS MEMORIAL BRIDGE
(U.S. 6, 20, 42 & S.R. 3 OVER CUYAHOGA RIVER)

CLEVELAND CUYAHOGA COUNTY OHIO

LEGEND

- EXISTING & PROPOSED CONTOURS
- PROPOSED CONTOURS
- EXISTING CONTOURS

DRAWN	TRACED	CHECKED	REVIEWED	REVISED
B.F.	B.F.	B.E.B.	C.A.B.	
DATE 3/31/94	DATE 3/31/94	DATE 4/4/94	DATE 4/8/94	SHEET 228/270

\11646\WACON.DWG

FHWA REGION	STATE	PROJECT	
5	OHIO		

362
412

CUYAHOGA COUNTY
CUY – 6 – 14.99

LINETYPE LEGEND

- EXISTING & PROPOSED CONTOURS
- PROPOSED CONTOURS
- EXISTING CONTOURS

HOWARD NEEDLES TAMMEN & BERGENDOFF
ARCHITECTS ENGINEERS PLANNERS
HNTB

EAST APPROACH PAVEMENT CONTOURS

BR. NO. CUY – 6 – 1499
REHABILITATION OF
VETERANS MEMORIAL BRIDGE
(U.S. 6, 20, 42 & S.R. 3 OVER CUYAHOGA RIVER)

CLEVELAND CUYAHOGA COUNTY OHIO

DRAWN P.F.	TRACED M.J.G.	CHECKED D.G.D.	REVIEWED C.A.B.	REVISED
DATE 2/2/94	DATE 2/2/94	DATE 2/14/94	DATE 4/6/94	SHEET 229/270

\11646\EACON.DWG

FHWA REGION	STATE	PROJECT	
5	OHIO		

363/412

CUYAHOGA COUNTY
CUY – 6 – 14.99

	Span 1–A											Span 1–B												
Floorbeam	1A	1	2	3	4	5	6	7	8	9	10	1	2	3	4	5	6	7	8	9	10	11	12	Floorbeam
North Curb	671.23	671.49	671.85	672.18	672.51	672.85	673.17	673.48	673.79	674.01	674.10	674.39	674.68	674.95	675.21	675.47	675.72	675.97	676.22	676.48	676.73	676.98	677.23	North Curb
℄	672.02	672.28	672.60	672.90	673.20	673.50	673.80	674.10	674.40	674.61	674.69	674.98	675.25	675.52	675.78	676.03	676.28	676.53	676.79	677.04	677.29	677.54	677.79	℄
South Curb	671.53	671.78	672.09	672.37	672.66	672.94	673.24	673.54	673.84	674.04	674.13	674.42	674.69	674.96	675.22	675.47	675.72	675.97	676.22	676.48	676.73	676.98	677.23	South Curb

	Span 1													Span 2																
Floorbeam	1	2	3	4	5	6	7	8	9	10	11	12	13	1	2	3	4	5	6	7	8	9	10	11	12	13	14	15	16	Floorbeam
North Curb	677.48	677.74	677.99	678.24	678.49	678.74	679.00	679.25	679.50	679.75	680.00	680.26	680.51	680.77	681.03	681.30	681.56	681.82	682.08	682.34	682.60	682.86	683.13	683.39	683.65	683.91	684.17	684.43	684.69	North Curb
℄	678.05	678.30	678.55	678.80	679.05	679.31	679.56	679.81	680.06	680.31	680.57	680.82	681.07	681.33	681.60	681.86	682.12	682.38	682.64	682.90	683.16	683.43	683.69	683.95	684.21	684.47	684.73	684.99	685.26	℄
South Curb	677.48	677.74	677.99	678.24	678.49	678.74	679.00	679.25	679.50	679.75	680.00	680.26	680.51	680.77	681.03	681.30	681.56	681.82	682.08	682.34	682.60	682.86	683.13	683.39	683.65	683.91	684.17	684.43	684.69	South Curb
Lower Deck	657.43	657.68	657.93	658.18	658.43	658.68	658.93	659.18	659.43	659.68	659.93	660.18	660.43	660.69	660.95	661.21	661.47	661.73	661.99	662.25	662.51	662.77	663.03	663.29	663.55	663.81	664.07	664.32	664.58	Lower Deck

	Span 3																		Span 5															
Floorbeam	1	2	3	4	5	6	7	8	9	10	11	12	13	14	15	16	17	18	1	2	3	4	5	6	7	8	9	10	11	12	13	14	15	Floorbeam
North Curb	684.95	685.20	685.46	685.71	685.97	686.22	686.47	686.72	686.97	687.23	687.48	687.74	687.99	688.25	688.51	688.77	689.03	689.29	689.15	688.82	688.49	688.17	687.84	687.52	687.19	686.87	686.55	686.23	685.91	685.59	685.27	684.95	684.62	North Curb
℄	685.52	685.78	686.04	686.30	686.56	686.83	687.09	687.35	687.61	687.88	688.13	688.39	688.65	688.91	689.17	689.43	689.70	689.96	689.82	689.49	689.16	688.83	688.51	688.18	687.85	687.52	687.19	686.86	686.53	686.20	685.87	685.55	685.22	℄
South Curb	684.95	685.20	685.46	685.71	685.97	686.22	686.47	686.72	686.97	687.23	687.48	687.74	687.99	688.25	688.51	688.77	689.03	689.29	689.15	688.82	688.49	688.17	687.84	687.52	687.19	686.87	686.55	686.23	685.91	685.59	685.27	684.95	684.62	South Curb
Lower Deck	664.85	665.04	665.23	665.43	665.62	665.82	666.01	666.20	666.40	666.59	666.78	666.98	667.17	667.36	667.56	667.75	667.94	668.13	668.13	667.88	667.64	667.39	667.14	666.89	666.64	666.39	666.15	665.90	665.65	665.40	665.15	664.90	664.65	Lower Deck

	Span 6															Span 7															
Floorbeam	1	2	3	4	5	6	7	8	9	10	11	12	13	14	15	1	2	3	4	5	6	7	8	9	10	11	12	13	14	15	Floorbeam
North Curb	684.30	683.98	683.67	683.33	683.00	682.68	682.35	682.02	681.69	681.36	681.03	680.70	680.38	680.05	679.72	679.38	679.05	678.72	678.40	678.07	677.74	677.41	677.08	676.75	676.42	676.09	675.77	675.44	675.11	674.78	North Curb
℄	684.89	684.56	684.23	683.90	683.57	683.24	682.91	682.58	682.25	681.92	681.60	681.27	680.94	680.61	680.28	679.95	679.62	679.29	678.96	678.63	678.30	677.97	677.64	677.31	676.99	676.66	676.33	676.00	675.67	675.34	℄
South Curb	684.30	683.98	683.67	683.33	683.00	682.68	682.35	682.02	681.69	681.36	681.03	680.70	680.38	680.05	679.72	679.38	679.05	678.72	678.40	678.07	677.74	677.41	677.08	676.75	676.42	676.09	675.77	675.44	675.11	674.78	South Curb
Lower Deck	664.32	663.99	663.67	663.33	663.00	662.68	662.35	662.02	661.69	661.36	661.03	660.70	660.38	660.05	659.72	659.38	659.05	658.72	658.40	658.07	657.74	657.41	657.08	656.75	656.42	656.09	655.77	655.44	655.11	654.78	Lower Deck

	Span 8															Span 9														
Floorbeam	1	2	3	4	5	6	7	8	9	10	11	12	13	14	15	1	2	3	4	5	6	7	8	9	10	11	12	13	Floorbeam
North Curb	674.45	674.12	673.79	673.46	673.13	672.80	672.47	672.14	671.82	671.49	671.16	670.83	670.50	670.17	669.84	669.51	669.19	668.88	668.56	668.24	667.93	667.61	667.29	666.97	666.66	666.34	666.02	665.71	North Curb
℄	675.01	674.68	674.35	674.02	673.69	673.36	673.03	672.71	672.38	672.05	671.72	671.39	671.06	670.73	670.40	670.07	669.76	669.44	669.12	668.80	668.49	668.17	667.85	667.54	667.22	666.90	666.59	666.27	℄
South Curb	674.45	674.12	673.79	673.46	673.13	672.80	672.47	672.14	671.82	671.49	671.16	670.83	670.50	670.17	669.84	669.51	669.19	668.88	668.56	668.24	667.93	667.61	667.29	666.97	666.66	666.34	666.02	665.71	South Curb
Lower Deck	654.45	654.12	653.79	653.46	653.13	652.80	652.47	652.14	651.82	651.49	651.16	650.83	650.50	650.17	649.84	649.51	649.19	648.88	648.56	648.24	647.93	647.61	647.29	646.97	646.66	646.34	646.02	645.71	Lower Deck

	Span 10												Span 11								Span 12												
Floorbeam	1	2	3	4	5	6	7	8	9	10	11	12	1	2	3	4	5	6	7	8	1	2	3	4	5	6	7	8	9	10	11	12	Floorbeam
North Curb	665.38	665.06	664.74	664.42	664.10	663.79	663.47	663.15	662.84	662.52	662.20	661.89	661.56	661.24	660.92	660.60	660.28	659.95	659.62	659.29	658.95	658.61	658.27	657.93	657.60	657.27	656.94	656.62	656.29	655.97	655.64	655.32	North Curb
℄	665.94	665.62	665.30	664.98	664.67	664.35	664.03	663.72	663.40	663.08	662.77	662.45	662.12	661.81	661.49	661.17	660.86	660.54	660.22	659.91	659.58	659.26	658.93	658.61	658.28	657.96	657.63	657.31	656.98	656.66	656.33	656.00	℄
South Curb	665.38	665.06	664.74	664.42	664.10	663.79	663.47	663.15	662.84	662.52	662.20	661.89	661.56	661.24	660.93	660.61	660.29	659.96	659.64	659.32	658.98	658.65	658.32	657.99	657.66	657.33	657.01	656.68	656.36	656.03	655.71	655.38	South Curb
Lower Deck	645.38	645.06	644.74	644.42	644.10	643.79	643.47	643.15	642.84	642.52	642.20	641.89	641.56	641.24	640.93	640.61	640.29	639.98	639.66	639.34	639.02	638.69	638.37	638.04	637.72	637.39	637.07	636.74	636.42	636.09	635.77	635.44*	Lower Deck

	Span 13								East Side Station																					
Floorbeam	1	2	3	4	5	6	7	8	1	2	3	4	5	6	7	8	9	10	11	12	13	14	15	16	17	18	19	20	21	Floorbeam
North Curb	654.98	654.68	654.38	654.07	653.76	653.45	653.14	652.84	652.53	652.22	651.91	651.60	651.30	650.99	650.68	650.37	650.06	649.76	649.45	649.14	648.83	648.52	648.21	647.91	647.60	647.27	646.93	646.63	646.47	North Curb
℄	655.67	655.34	655.01	654.67	654.34	654.00	653.67	653.33	652.99	652.66	652.32	651.99	651.65	651.31	650.98	650.64	650.31	649.97	649.63	649.30	648.96	648.63	648.29	647.95	647.62	647.32	647.09	646.93	646.85	℄
South Curb	655.05	654.69	654.33	653.97	653.61	653.25	652.89	652.53	652.17	651.80	651.44	651.08	650.72	650.36	650.00	649.64	649.27	648.91	648.55	648.19	647.83	647.47	647.11	646.89	646.68	646.51	646.39	646.28	646.27	South Curb
Lower Deck	635.27	635.10	634.94	634.77	634.61	634.43	634.27	634.10	—	—	—	—	—	—	—	—	—	—	—	—	—	—	—	—	—	—	—	—	—	Lower Deck

*For South Bay

	Span 4																										
Floorbeam	**	0	1	2	3	4	5	6	7	8	9	10	11	12	11'	10'	9'	8'	7'	6'	5'	4'	3'	2'	1'	0'	**	Floorbeam
North Curb	689.66	690.05	690.80	691.58	692.37	693.14	693.84	694.46	694.97	695.39	695.72	695.95	696.10	696.14	696.10	695.95	695.72	695.39	694.97	694.45	693.84	693.14	692.37	691.58	690.80	690.02	689.58	North Curb
℄	690.33	690.72	691.47	692.26	693.04	693.81	694.51	695.12	695.64	696.06	696.39	696.62	696.76	696.81	696.76	696.62	696.39	696.06	695.64	695.12	694.51	693.81	693.04	692.26	691.47	690.69	690.25	℄
South Curb	689.66	690.05	690.80	691.58	692.37	693.14	693.84	694.46	694.97	695.39	695.72	695.95	696.10	696.14	696.10	695.95	695.72	695.39	694.97	694.45	693.84	693.14	692.37	691.58	690.80	690.02	689.58	South Curb

** – Center Floorbeam at Piers 3 or 4

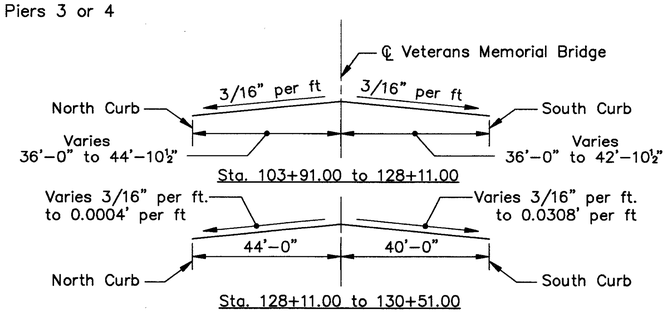

SUPERELEVATION TRANSITION DIAGRAM

Note: Rate of Superelevation Transition is uniform.

NOTES:

Curb elevations for Span 4 are given at the extreme outer curb and not at the median curb. Cross–slope is continuous through the median.

Top of new lower deck is 1/2" higher than the top of existing lower deck, except for span 13 which is sloped to match the existing top of brick at the east abutment.

For contour elevations at west approach see sheet 228/270.

For contour elevations at east approach see sheet 229/270.

COUNTY BRIDGE NO. 84

HOWARD NEEDLES TAMMEN & BERGENDOFF
ARCHITECTS ENGINEERS PLANNERS
HNTB

TOP OF PAVEMENT ELEVATIONS
BR. NO. CUY – 6 – 1499
REHABILITATION OF
VETERANS MEMORIAL BRIDGE
(U.S. 6, 20, 42 & S.R. 3 OVER CUYAHOGA RIVER)

CLEVELAND CUYAHOGA COUNTY OHIO

DRAWN B.E.B.	TRACED B.E.B.	CHECKED W.D.D.	REVIEWED C.A.B.	REVISED
DATE 5/24/93	DATE 5/24/93	DATE 3/15/94	DATE 4/7/94	SHEET 230/270

\11646\ELEV.DWG

FHWA REGION	STATE	PROJECT	
5	OHIO		

364/412

CUYAHOGA COUNTY
CUY – 6 – 14.99

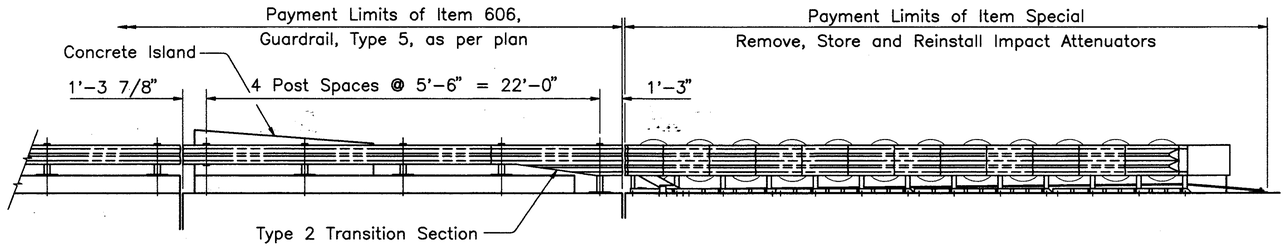

PARTIAL GUARDRAIL ELEVATION

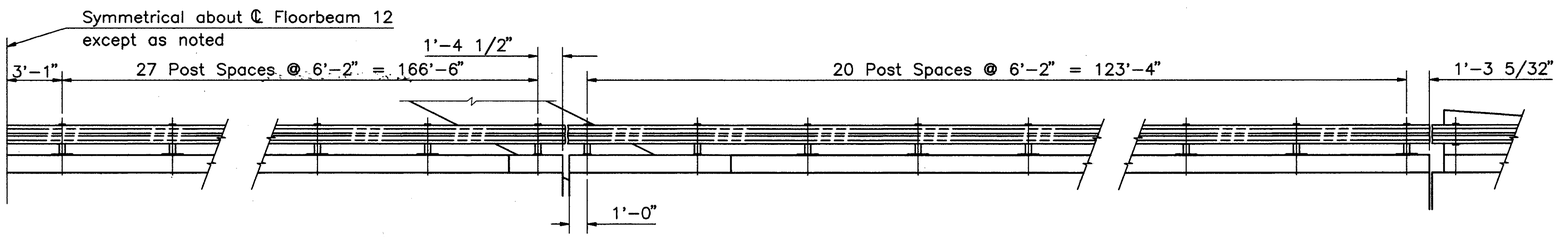

PARTIAL GUARDRAIL ELEVATION

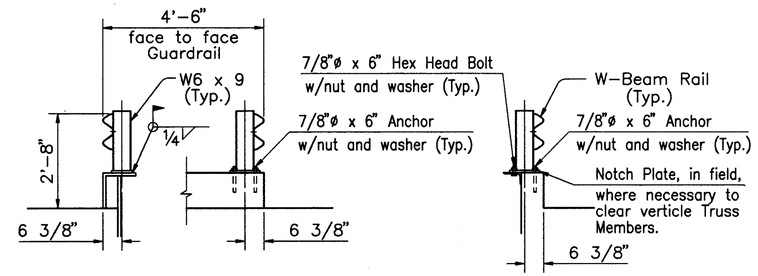

TYPICAL MEDIAN SECTIONS

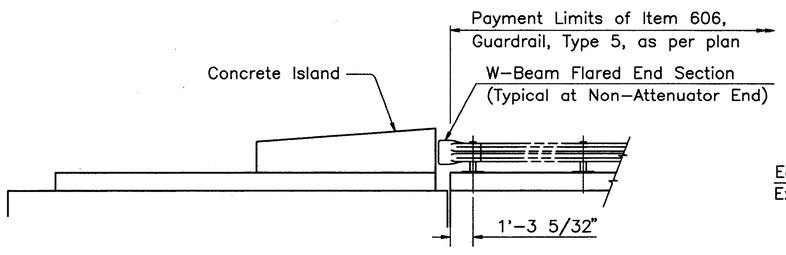

PARTIAL GUARDRAIL ELEVATION

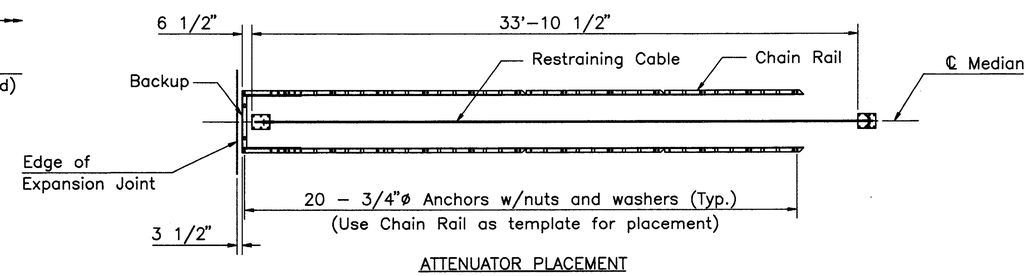

ATTENUATOR PLACEMENT

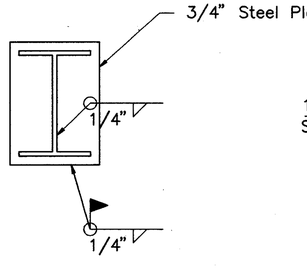

WELDED CONNECTION

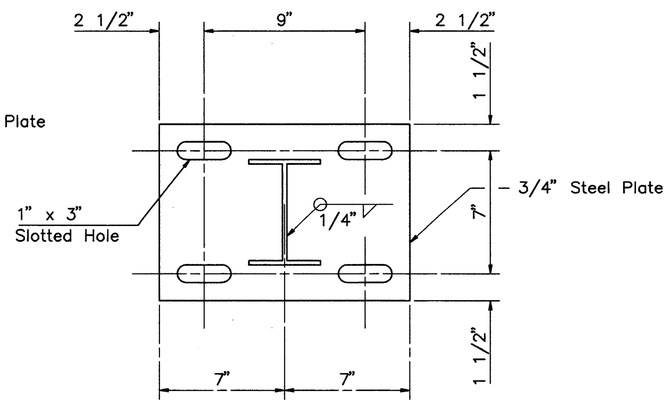

BOLTED CONNECTION

POST CONNECTION DETAILS

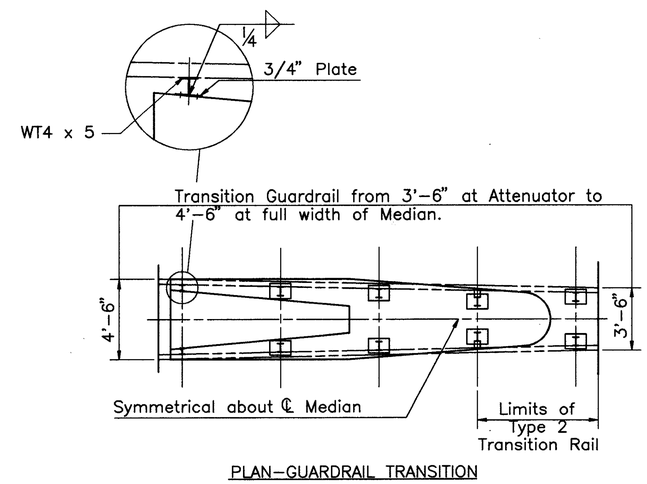

PLAN–GUARDRAIL TRANSITION

Notes:

For additional Guardrail details, see Standard Construction Drawings GR–1.1, dated 5/06/91, and GR–1.2, dated 10/30/92.

Anchors shall be included with the appropriate item for payment and shall conform to the requirements shown on Standard Construction Drawing GR–1.2, dated 10/30/92, except the Attenuator Anchors shall have a minimum Embedment length of 5".

The Guardrail opening at the Upper Deck Expansion Joints shall be 3" (Nominal).

For Concrete Island details, see Upper Deck Plan Piers 3 and 4, Sheet 198/270 .

COUNTY BRIDGE NO. 84

HOWARD NEEDLES TAMMEN & BERGENDOFF
ARCHITECTS ENGINEERS PLANNERS
HNTB

IMPACT ATTENUATOR AND
GUARDRAIL DETAILS
BR. NO. CUY – 6 – 1499
REHABILITATION OF
VETERANS MEMORIAL BRIDGE
(U.S. 6, 20, 42 & S.R. 3 OVER CUYAHOGA RIVER)

CLEVELAND CUYAHOGA COUNTY OHIO

DRAWN J.T.	TRACED J.T.	CHECKED B.E.B.	REVIEWED C.A.B.	REVISED
DATE 3/28/94	DATE 3/28/94	DATE 3/31/94	DATE 4/07/94	SHEET 231/270

\11646\CONCRETE\IMPCT_AT.DWG

FHWA REGION	STATE	PROJECT	
5	OHIO		

364A / 412

CUYAHOGA COUNTY
CUY – 6 – 14.99

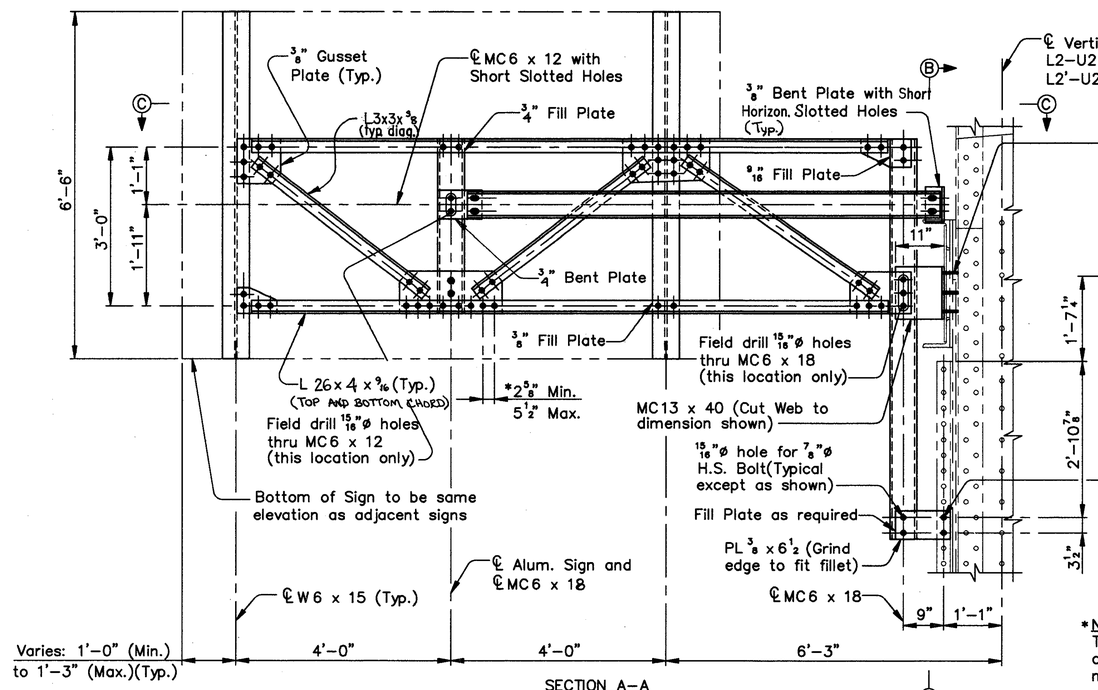

SECTION A–A
(ITEM 630 – TRUSS MOUNTED SIGN SUPPORT, AS PER PLAN)

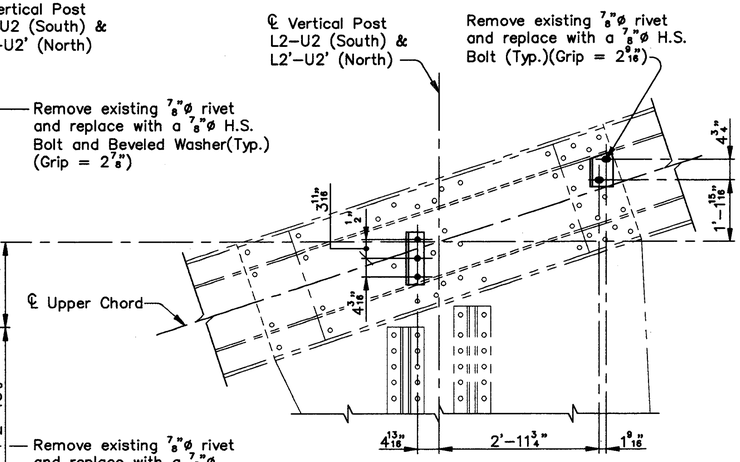

VIEW B–B

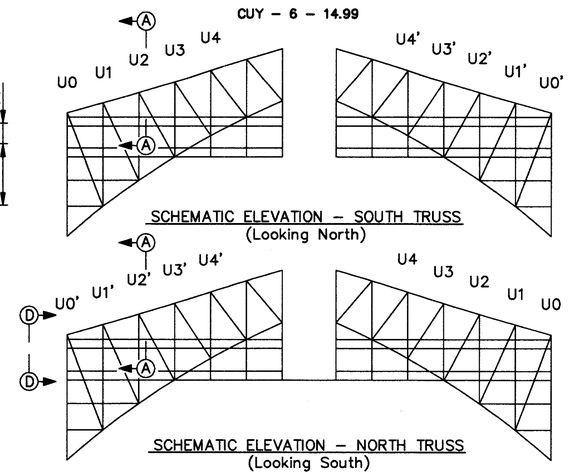

*Note:
The minimum number of bolts required are shown in all views. The bolt spacing may vary between the min. and max. values shown, provided the minimum number of bolts required is met.

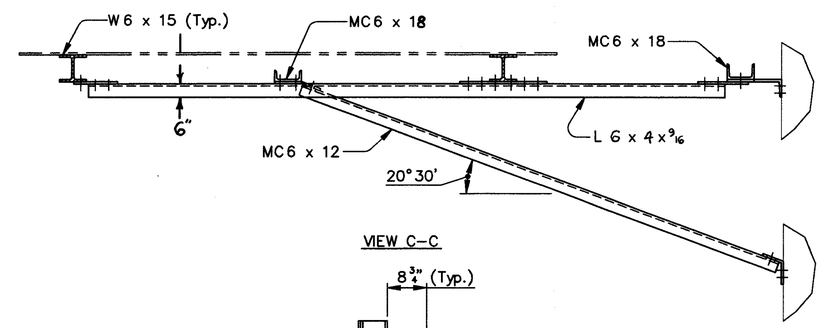

VIEW C–C

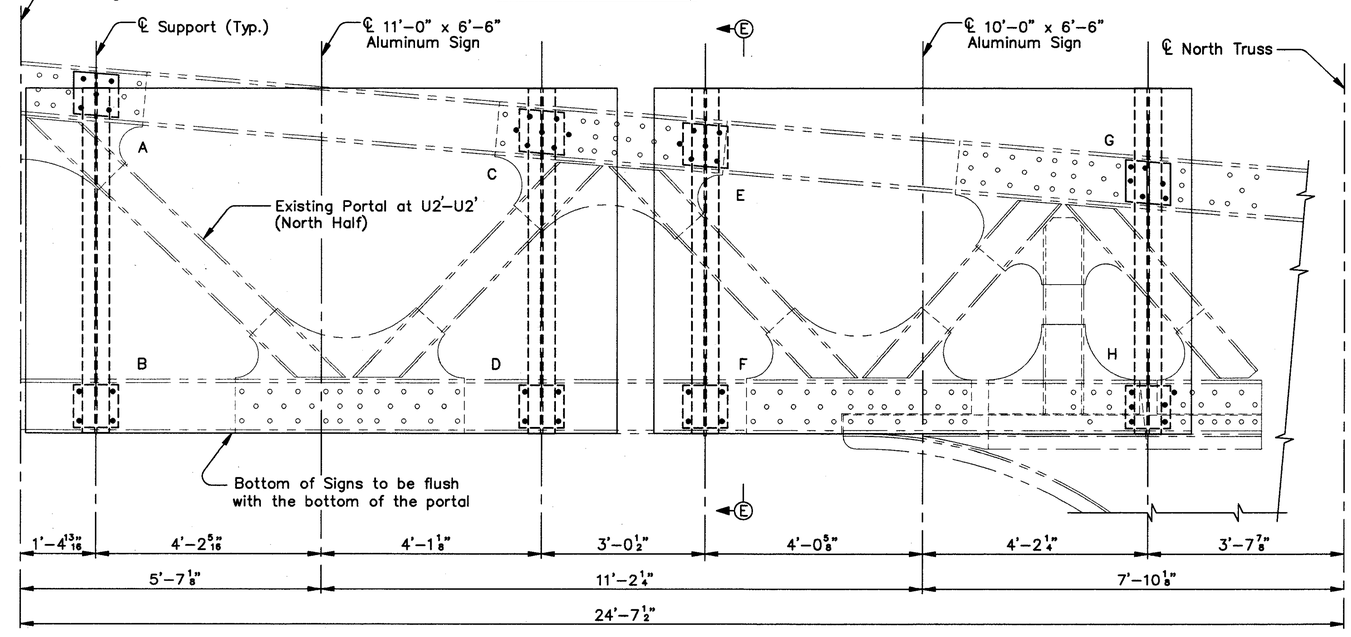

VIEW D–D
(Looking West)
(ITEM 630 – SIGN ATTACHMENT ASSEMBLY AS PER PLAN)

Notes:
A minimum of 4 – 7/8"ø H.S. Bolts are required at each existing steel connection. The grip varies from 1 3/8" to 1 15/16".

All 15/16"ø holes thru new steel shall be field drilled.

At Location A remove 4 existing 7/8"ø rivets and replace with 7/8"ø H.S. Bolts. Remove 1 existing 7/8"ø Rivet and replace with a 7/8" CSK. H.S. Bolt.

At Locations B, D and F field drill 4 – 15/16"ø holes thru new and existing steel for 7/8"ø H.S. Bolts.

At Locations C and E remove 4 existing 7/8"ø rivets and replace with 7/8"ø H.S. Bolts. Remove 3 existing 7/8"ø Rivets and replace with 7/8" CSK. H.S. Bolts.

At Location G remove 2 existing 7/8"ø rivets and replace with 7/8"ø H.S. Bolts. Remove 2 existing 7/8"ø Rivets and replace with 7/8" CSK. H.S. Bolts. Field drill 2 – 15/16"ø holes thru the new and existing steel for 7/8"ø H.S. Bolts.

At Location H remove 5 existing 7/8"ø rivets and replace with 7/8"ø H.S. Bolts. Remove 1 existing 7/8"ø Rivet and replace with a 7/8" CSK. H.S. Bolt.

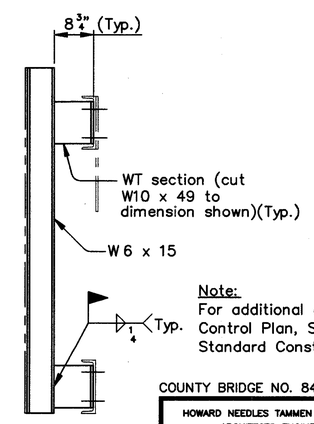

SECTION E–E

Note:
For additional details, see Traffic Control Plan, Sheet 57 of 412 and Standard Construction Drawing TC–51.10.

COUNTY BRIDGE NO. 84

HOWARD NEEDLES TAMMEN & BERGENDOFF
ARCHITECTS ENGINEERS PLANNERS
HNTB

SIGN SUPPORTS
BR. NO. CUY – 6 – 1499
REHABILITATION OF
VETERANS MEMORIAL BRIDGE
(U.S. 6, 20, 42 & S.R. 3 OVER CUYAHOGA RIVER)
CLEVELAND CUYAHOGA COUNTY OHIO

DRAWN	TRACED	CHECKED	REVIEWED	REVISED
J.L.V.	J.L.V.	K.S.R.	C.A.B.	
DATE 06/14/94	DATE 06/14/94	DATE 06/15/94	DATE 06/15/94	SHEET 231A/270

\11646\STEEL\SIGNS.DWG

FHWA REGION	STATE	PROJECT	
5	OHIO		

365 / 412

CUYAHOGA COUNTY
CUY – 6 – 14.99

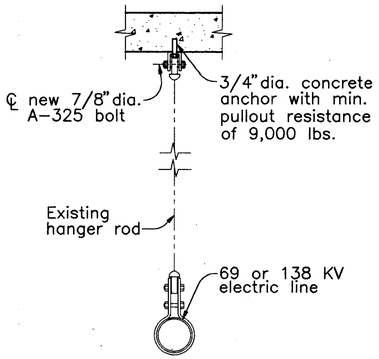

TYPICAL SECTION
LINES SUPPORTED FROM ROOF SLAB
(West Side Station and Detroit Ave. Tunnel)

Note:
This detail is to be used at 16 support locations as directed by the Engineer where roof slab is to be patched or replaced.

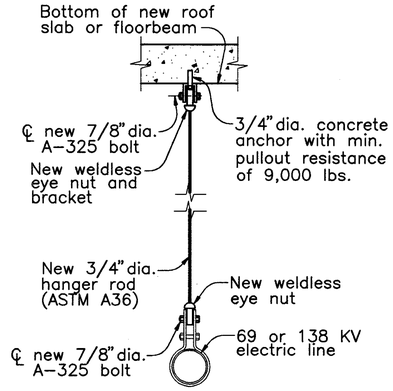

TYPICAL SECTION
LINES SUPPORTED FROM ROOF SLAB
(East Side Station and East Subway)

Note:
This detail applies at all 16 support locations in East Side Station and East Subway. New hanger lengths to be field determined by Contractor.

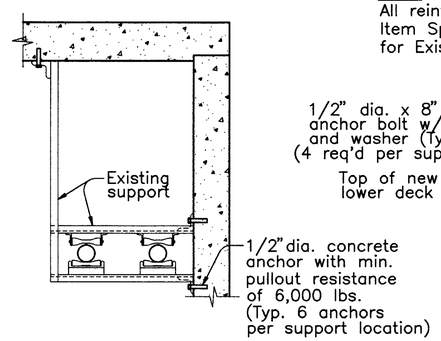

TYPICAL SECTION
LINES SUPPORTED FROM ROOF SLAB AND WALL
(Detroit Ave. tunnel)

Note:
This detail is to be used at 12 support locations as directed by the Engineer where roof slab or wall are to be patched or replaced.

Note:
All reinforcing steel shall be included with Item Special, Protection and Support Modifications for Existing C.P.P. Electric Lines for payment.

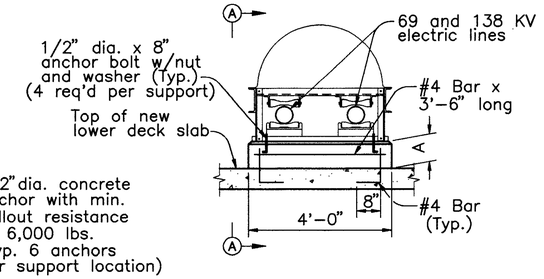

TYPICAL SECTION
LINES SUPPORTED FROM LOWER DECK SLAB
(West Side Station, Spans 1 thru 3 and 5 thru 13)

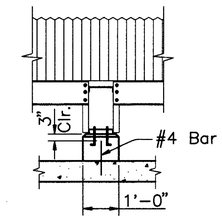

VIEW A–A

LOCATION	NUMBER OF SUPPORTS	DIM "A" *
WEST STATION	2	1'–4"
SPAN 1	7	1'–0"
SPAN 2	8	11"
SPAN 3	9	Varies 11" to 1'–6"
PIER 3	1	1'–6"
PIER 4	1	1'–6"
SPAN 5	6	Varies 10" to 1'–5"
SPAN 6	8	10"
SPAN 7	8	11"
SPAN 8	8	Varies 11" to 1'–4"
SPAN 9	6	1'–5"
SPAN 10	6	1'–5"
SPAN 11	5	1'–5"
SPAN 12	6	1'–5"
SPAN 13	4	Varies 8" to 1'–5"

* Note:
Dimensions shown are approximate. After new lower deck is placed the actual dimensions shall be based upon maintaining the existing power lines within ± 1/4" of their original elevations surveyed prior to commencing construction. No change in payment will be made for differences in these dimensions.

69 AND 138 KV C.P.P. ELECTRIC LINE SUPPORT DETAILS

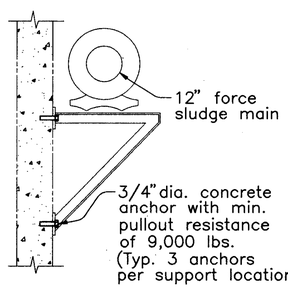

TYPICAL SECTION
MAIN SUPPORTED FROM WALL
(West 25th Street Tunnel)

Note:
This detail is to be used at 4 support locations as directed by the Engineer where wall is to be patched.

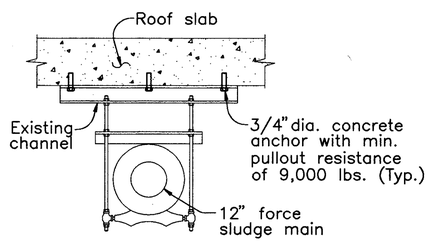

TYPICAL SECTION
MAIN SUPPORTED FROM ROOF SLAB
(West Side Station and West 25th Street Tunnel)

Note:
This detail is to be used at 6 support locations as directed by the Engineer where roof slab is to be patched.

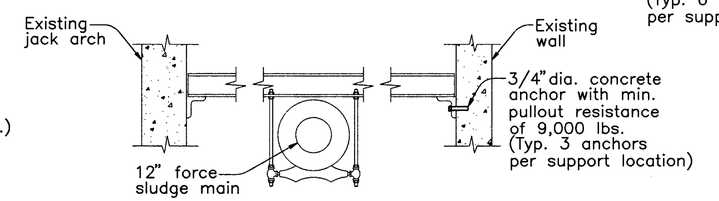

TYPICAL SECTION
MAIN SUPPORTED FROM JACK ARCH AND WALL
(West 25th Street Tunnel)

Note:
This detail is to be used at 4 support locations as directed by the Engineer where wall is to be patched.

12" FORCE SLUDGE MAIN SUPPORT DETAILS

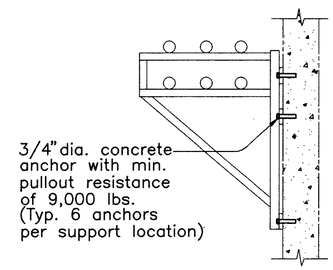

C.P.P. DUCT SUPPORT DETAIL
(West 25th street tunnel)

Note:
This detail is to be used at 2 support locations in the W. 25th street tunnel. Include with Item Special, Patching Concrete Structures, for payment.

NOTES:

FOR O.B.T. SUPPORT DETAILS SEE SHEET 233/270.

TEMPORARY SUPPORTS, PROTECTION AND PERMANENT SUPPORTS FOR THE SLUDGE MAIN SHALL BE INCLUDED WITH ITEM SPECIAL, PATCHING CONCRETE STRUCTURES FOR PAYMENT.

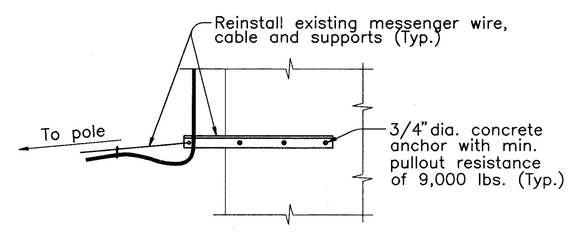

ATTACHMENT TO NORTH EXTERIOR SHAFT OF PIER 2

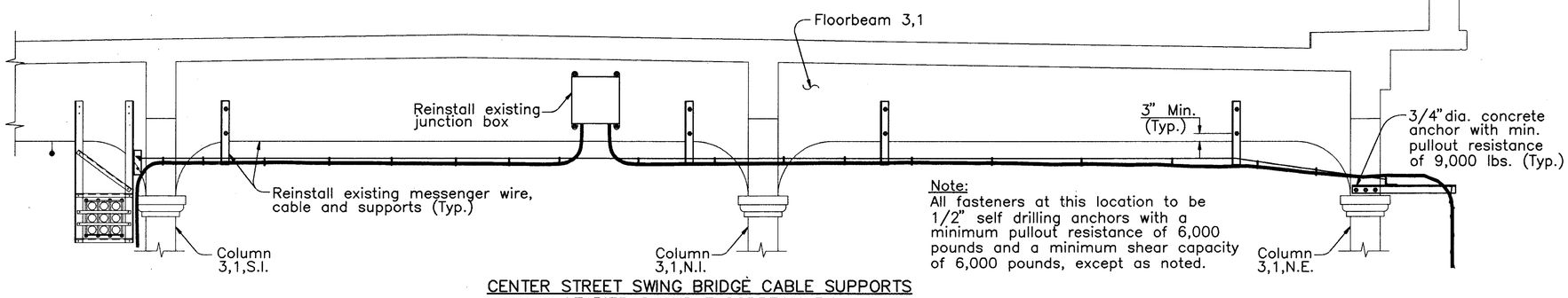

Note:
All fasteners at this location to be 1/2" self drilling anchors with a minimum pullout resistance of 6,000 pounds and a minimum shear capacity of 6,000 pounds, except as noted.

CENTER STREET SWING BRIDGE CABLE SUPPORTS AT PIER 2 AND FLOORBEAM 3,1

COUNTY BRIDGE NO. 84

HOWARD NEEDLES TAMMEN & BERGENDOFF
ARCHITECTS ENGINEERS PLANNERS
HNTB

UTILITY SUPPORT DETAILS
BR. NO. CUY – 6 – 1499
REHABILITATION OF
VETERANS MEMORIAL BRIDGE
(U.S. 6, 20, 42 & S.R. 3 OVER CUYAHOGA RIVER)
CLEVELAND CUYAHOGA COUNTY OHIO

DRAWN	TRACED	CHECKED	REVIEWED	REVISED
B.E.B.	B.E.B.	R.A.S.	C.A.B.	
DATE 2/12/93	DATE 2/12/93	DATE 5/3/94	DATE 5/6/94	SHEET 232/270

\11646\UTILITY.DWG

FHWA REGION	STATE	PROJECT	
5	OHIO		

366/412

CUYAHOGA COUNTY
CUY – 6 – 14.99

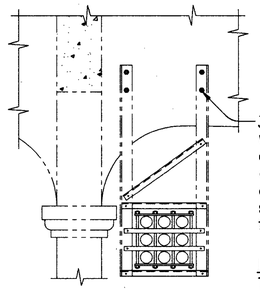

Note:
There are 8 floorbeam locations with fixed duct supports.

TYPICAL SECTION
DUCTS SUPPORTED FROM UPPER DECK FLOORBEAM
(Spans 1A thru 3 and 5 thru East Side Station)
(Hangers shown are on west face of floorbeam, actual hangers are on either or both faces of floorbeam)

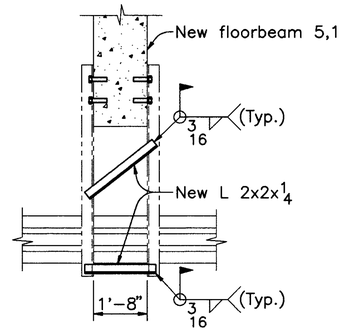

FIXED SUPPORT DETAIL AT FLOORBEAM 5,1

Note:
At floorbeam 5,1 remove and disassemble existing duct support. Replace side angles with new angles, to accommodate new floorbeam width. Reinstall duct support as shown in typical section.

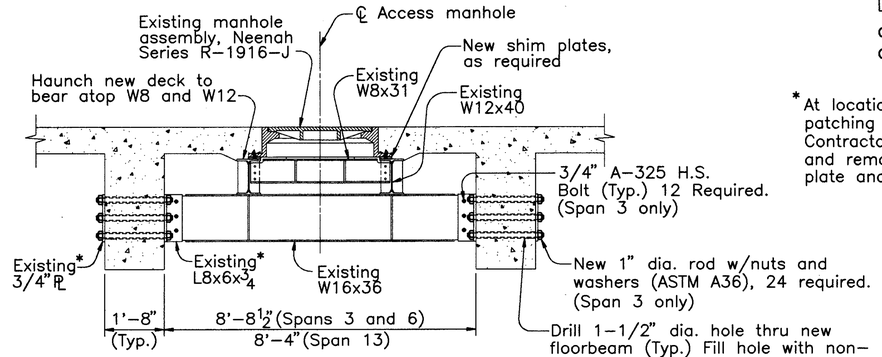

SECTION A–A

Note:
At Contractor's option, steel framing may be disassembled to facilitate construction. No separate payment will be made for new bolts. All bolts shall be ASTM A–325, of the same size as the original bolts.

*At locations in spans 6 and 13 where patching of the floorbeams is required, the Contractor shall provide temporary shoring and remove and reinstall the connection plate and support angles.

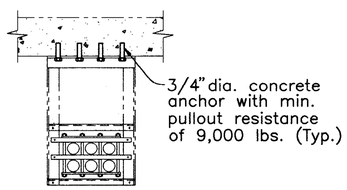

TYPICAL SECTION
DUCTS SUPPORTED FROM ROOF SLAB
(Detroit Ave. Tunnel and West Side Station)

Note:
This detail is to be used at 2 support locations as directed by the Engineer where roof slab is to be patched or replaced.

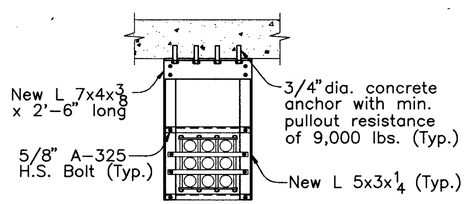

TYPICAL SECTION
DUCTS SUPPORTED FROM ROOF SLAB
(East Subway)

Note:
This detail is to be used at all 5 support locations in the East Subway. The lengths of the new hanger angles shall be field determined by the Contractor, based on the location of the existing ducts and the bottom of the new roof slab.

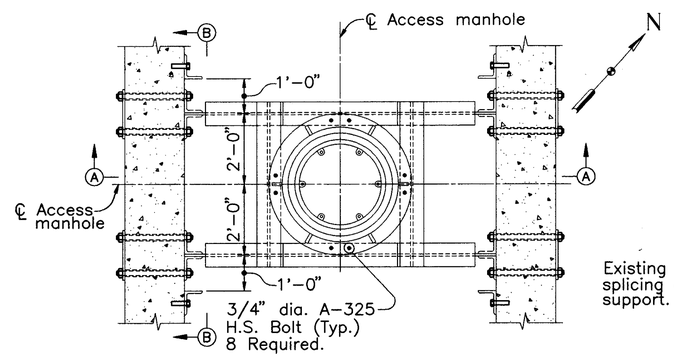

PLAN
ACCESS MANHOLE SUPPORT LOCATIONS
(South bay, Spans 3, 6 and 13)

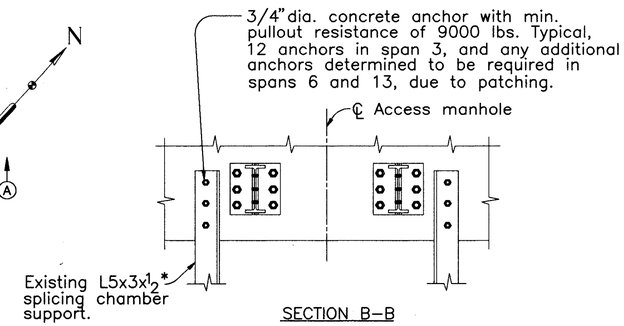

SECTION B–B

NOTES:
FOR ACCESS MANHOLE DETAILS AT WEST SIDE STATION SEE SHEET 233A/270 .

TOTAL WEIGHT OF EXISTING SPLICING CHAMBER IS APPROXIMATELY 6,000 POUNDS.

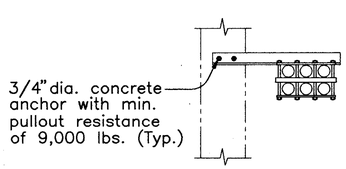

TYPICAL SECTION
DUCTS SUPPORTED FROM COLUMN
(Detroit Ave. Tunnel and West Side Station)

Note:
This detail is to be used at 8 support locations as directed by the Engineer where column is to be patched or replaced.

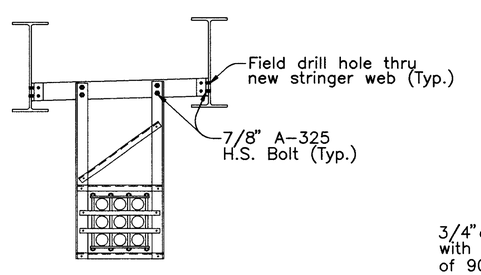

TYPICAL SECTION
DUCTS SUPPORTED FROM UPPER DECK STRINGERS
(Span 4)

Note:
This detail applies adjacent to floorbeams 5 and 5', at 8 locations.

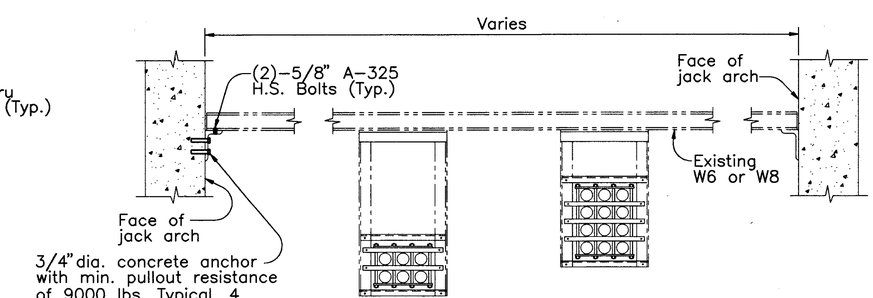

TYPICAL SECTION
DUCTS SUPPORTED FROM JACK ARCHES
(West Side Station)

Note:
This detail is to be used at 4 support locations as directed by the Engineer where jack arch is to be patched or replaced. The actual number of ducts and duct banks may vary from that shown.

COUNTY BRIDGE NO. 84

HOWARD NEEDLES TAMMEN & BERGENDOFF
ARCHITECTS ENGINEERS PLANNERS
HNTB

O.B.T. SUPPORT DETAILS
BR. NO. CUY – 6 – 1499
REHABILITATION OF
VETERANS MEMORIAL BRIDGE
(U.S. 6, 20, 42 & S.R. 3 OVER CUYAHOGA RIVER)
CLEVELAND CUYAHOGA COUNTY OHIO

DRAWN B.E.B.	TRACED B.E.B.	CHECKED R.A.S.	REVIEWED C.A.B.	REVISED
DATE 2/12/93	DATE 2/12/93	DATE 5/3/94	DATE 5/6/94	SHEET 233/270

\11646\UTILITY.DWG

FHWA REGION	STATE	PROJECT	
5	OHIO		

366A / 412

CUYAHOGA COUNTY
CUY – 6 – 14.99

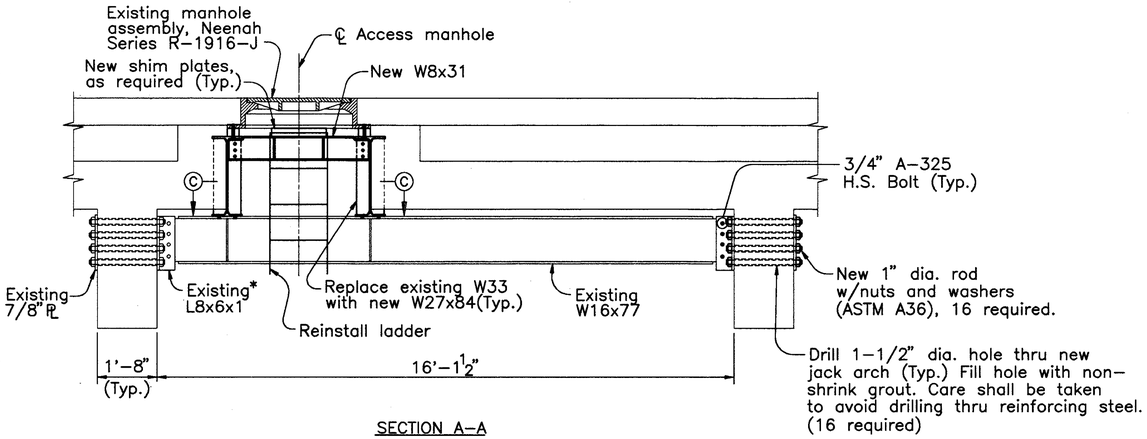

SECTION A–A

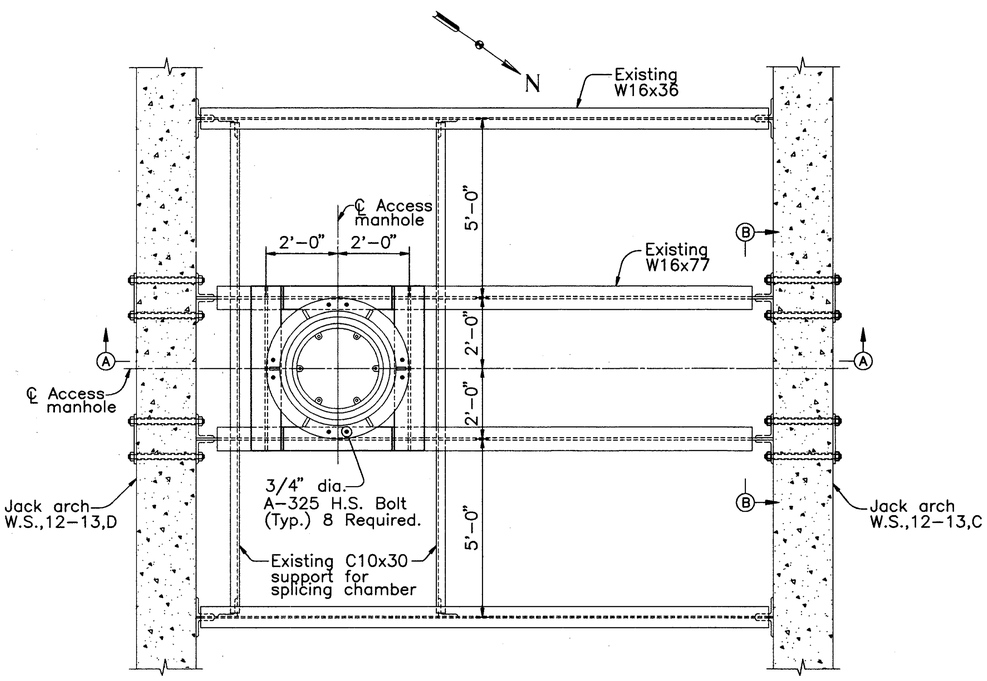

PLAN
ACCESS MANHOLE SUPPORT LOCATION–WEST STATION
(South sidewalk and roof slab not shown)

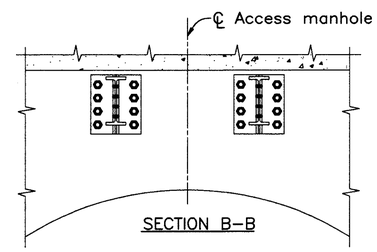

SECTION B–B

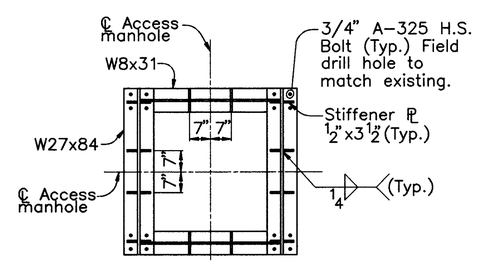

SECTION C–C

NOTES:
FOR ACCESS MANHOLE DETAILS AT SPANS 3, 6 AND 13 SEE SHEET 233 / 270 .

TOTAL WEIGHT OF EXISTING SPLICING CHAMBER IS APPROXIMATELY 6,000 POUNDS.

ALL STRUCTURAL STEEL SHALL BE ASTM A–36.

COUNTY BRIDGE NO. 84

HOWARD NEEDLES TAMMEN & BERGENDOFF
ARCHITECTS ENGINEERS PLANNERS
HNTB

O.B.T. SUPPORT DETAILS
BR. NO. CUY – 6 – 1499
REHABILITATION OF
VETERANS MEMORIAL BRIDGE
(U.S. 6, 20, 42 & S.R. 3 OVER CUYAHOGA RIVER)
CLEVELAND CUYAHOGA COUNTY OHIO

DRAWN B.E.B.	TRACED B.E.B.	CHECKED R.A.S.	REVIEWED C.A.B.	REVISED
DATE 2/12/93	DATE 2/12/93	DATE 5/3/94	DATE 5/6/94	SHEET 233A / 270

\11646\UTILITY.DWG

FHWA REGION	STATE	PROJECT	
5	OHIO		

367/412

CUYAHOGA COUNTY
CUY – 6 – 14.99

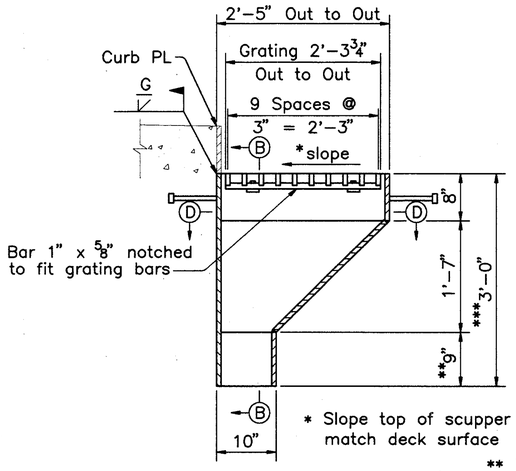

SECTION A–A
(MC 7 x 19.1 not shown)

** 1'-3" @ Sta. 102+58.37
*** 3'-6" @ Sta. 102+58.37

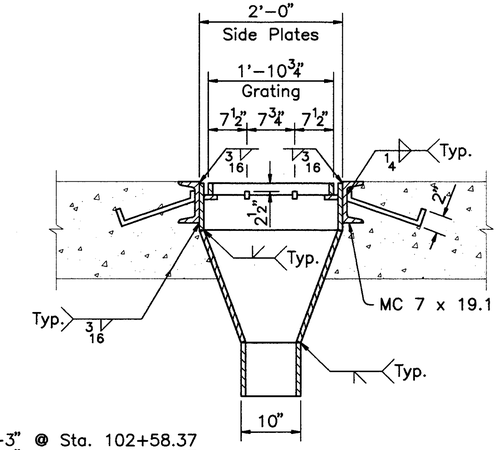

SECTION B–B

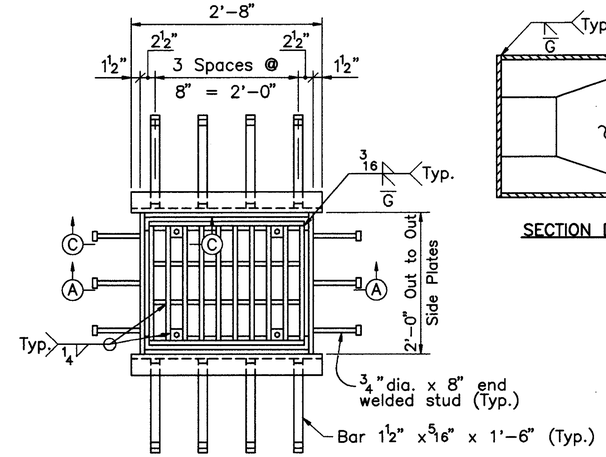

PLAN

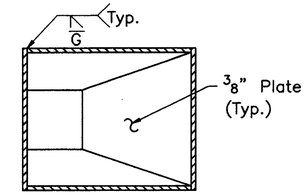

SECTION D–D

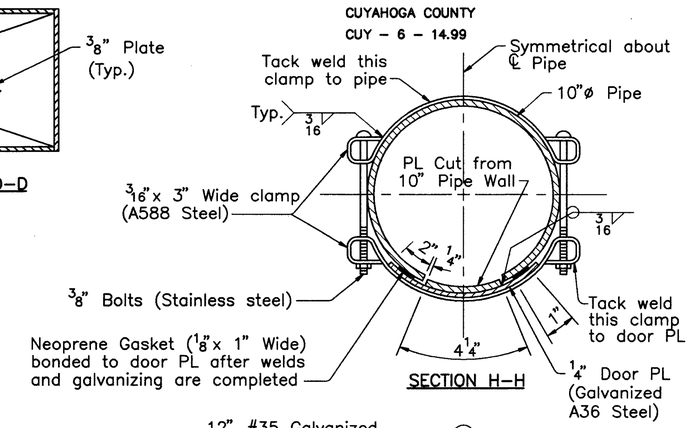

SECTION H–H

SCUPPER DETAIL

NOTE:
This detail applies at all locations except Tower A and the north shaft of the East Abutment.

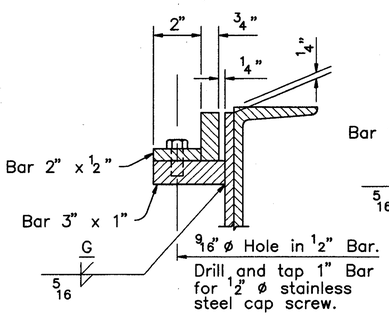

SECTION THRU GRATING FASTENING

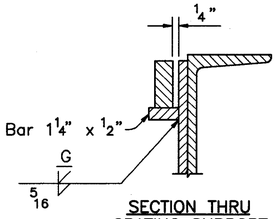

SECTION THRU GRATING SUPPORT

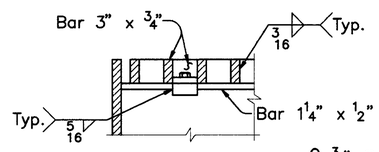

SECTION C–C

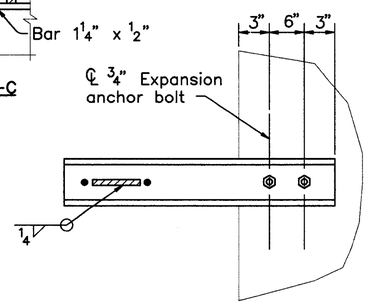

SECTION G–G

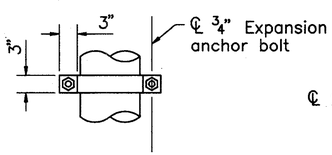

SECTION E–E

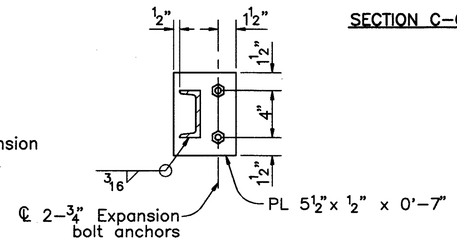

SECTION F–F

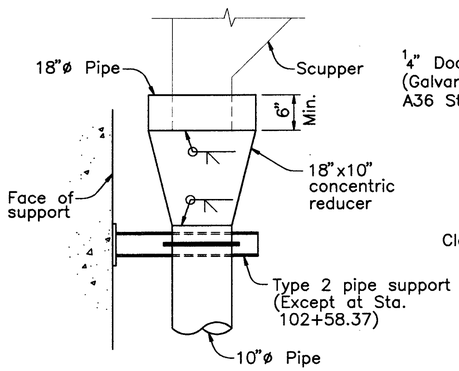

REDUCER DETAIL

NOTE:
This detail applies at all scupper locations.

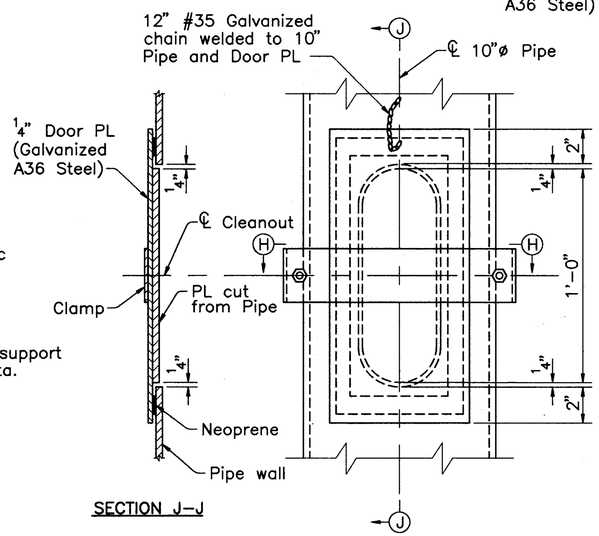

SECTION J–J

ELEVATION

CLEANOUT DETAILS

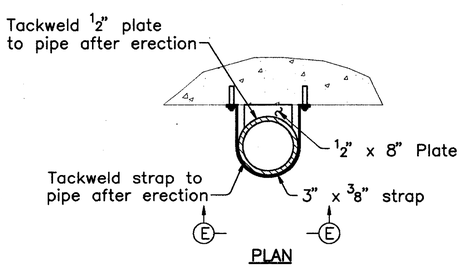

TYPE 1 PIPE SUPPORT

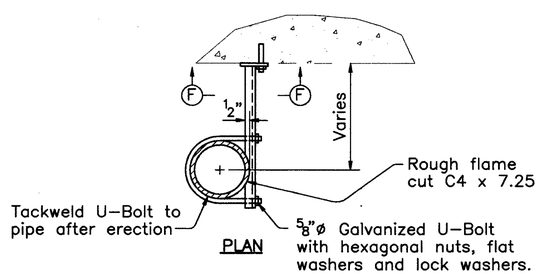

TYPE 2 PIPE SUPPORT

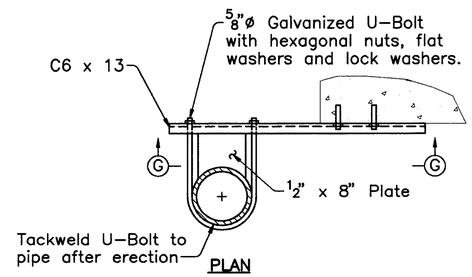

TYPE 3 PIPE SUPPORT

PIPE SUPPORT DETAIL

DRAINAGE NOTES:

THE SCUPPERS AND SCUPPER SUPPORTS SHALL BE HOT–DIPPED GALVANIZED ASTM A36 STEEL.

ALL PIPES SHALL BE 10"ø STANDARD HOT–DIPPED GALVANIZED STEEL PIPE. MINIMUM PIPE BEND RADIUS SHALL BE 18" TO ℄.

FOR SCUPPER LOCATIONS SEE SHEET 1A/270, AND UPPER DECK SLAB PLANS.

PIPE SUPPORTS SHALL BE SPACED AT 5'-0" CENTERS MAXIMUM. ALL PIPE SEGMENTS SHALL BE SUPPORTED BY AT LEAST TWO SUPPORTS.

EXPANSION BOLT ANCHORS SHALL HAVE A MINIMUM PULLOUT RESISTANCE OF 12,000 POUNDS.

JOINTS SHALL BE MADE BY WELDING OR BY USE OF GALVANIZED STEEL MECHANICAL CLAMP TYPE COUPLINGS WITH RING GASKETS.

THE CONTRACTOR SHALL FIELD VERIFY ALL DIMENSIONS AND ELEVATIONS PERTAINING TO FITUP WITH THE EXISTING STRUCTURE, PRIOR TO PREPARATION OF DRAINAGE SHOP DRAWINGS.

COUNTY BRIDGE NO. 84

HOWARD NEEDLES TAMMEN & BERGENDOFF
ARCHITECTS ENGINEERS PLANNERS
HNTB

DRAINAGE DETAILS

BR. NO. CUY – 6 – 1499
REHABILITATION OF
VETERANS MEMORIAL BRIDGE
(U.S. 6, 20, 42 & S.R. 3 OVER CUYAHOGA RIVER)

CLEVELAND CUYAHOGA COUNTY OHIO

DRAWN R.S.Y.	TRACED R.S.Y.	CHECKED B.E.B.	REVIEWED C.A.B.	REVISED
DATE 3/25/94	DATE 3/25/94	DATE 3/26/94	DATE 3/31/94	SHEET 234/270

\11646\DRAIN4.DWG

FHWA REGION	STATE	PROJECT	
5	OHIO		

368
412

CUYAHOGA COUNTY
CUY – 6 – 14.99

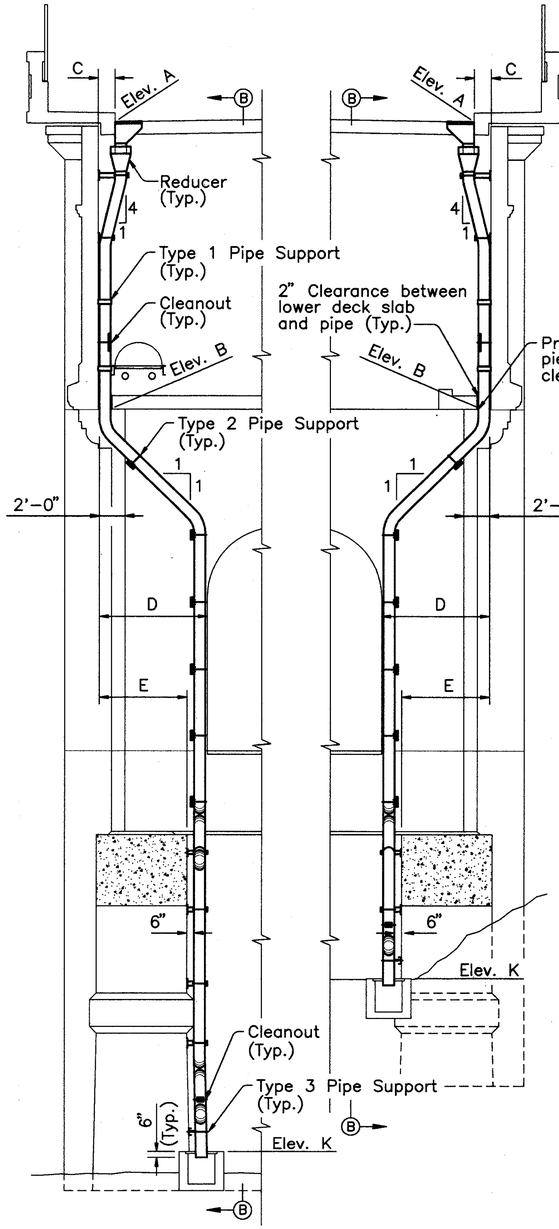

ELEVATION–PIER 1
(Looking west)

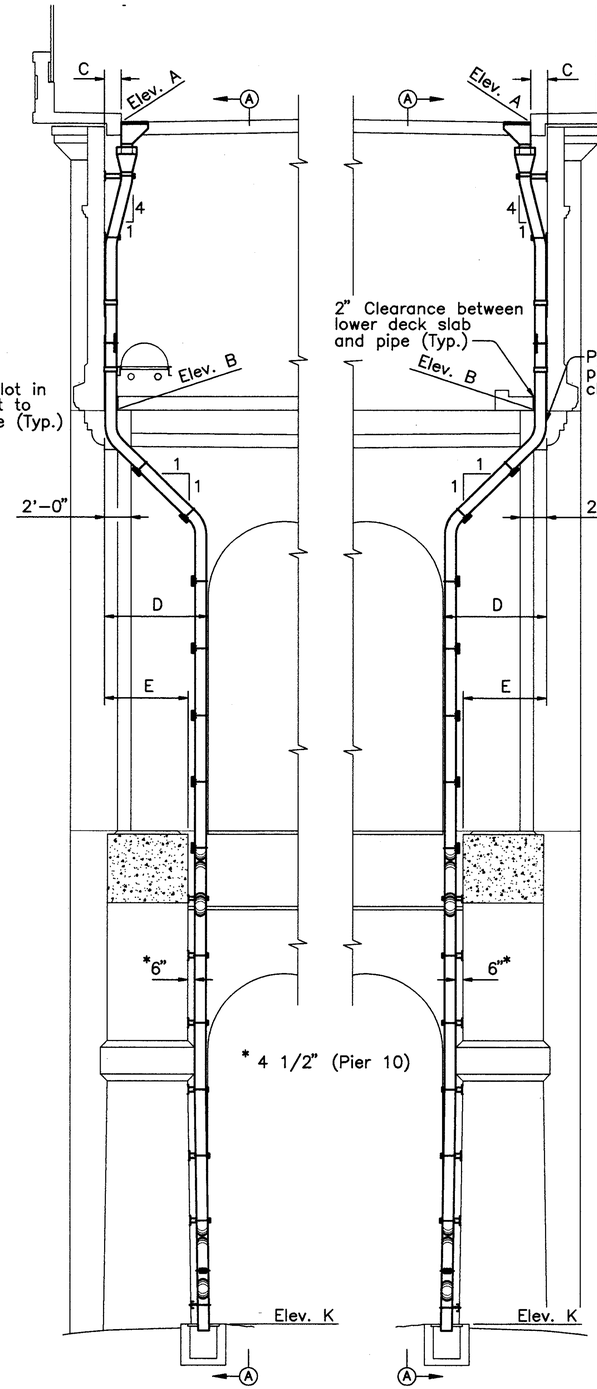

ELEVATION–PIERS 2,5,6 AND 10
(Looking west)

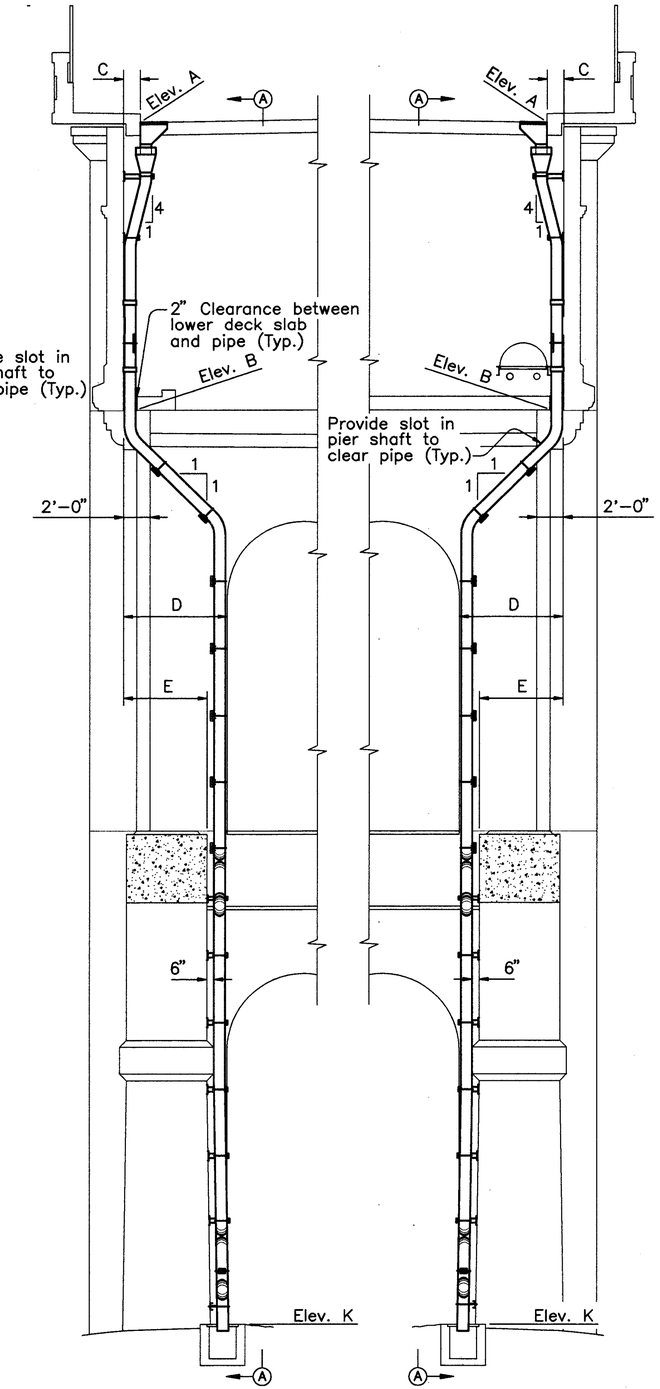

ELEVATION–PIERS 7,8 AND 9
(Looking east)

LOCATION	Elev. A	Elev. B	C	D	E
PIER 1 S	680.70	659.58	1'–3"	8'–1½"	6'–7½"
PIER 1 N	680.70	659.58	1'–3"	8'–1½"	6'–7½"
PIER 2 S	684.88	663.73	0'–7⅛"	8'–1½"	6'–7½"
PIER 2 N	684.88	663.73	0'–7⅛"	8'–1½"	6'–7½"
PIER 5 S	684.54	663.53	0'–5¾"	7'–9"	6'–3"
PIER 5 N	684.54	663.53	0'–5¾"	7'–9"	6'–3"
PIER 6 S	679.63	658.59	1'–3"	7'–9"	6'–3"
PIER 6 N	679.63	658.59	1'–3"	7'–9"	6'–3"
PIER 7 S	674.69	653.65	1'–3"	7'–9"	6'–3"
PIER 7 N	674.69	653.65	1'–3"	7'–9"	6'–3"
PIER 8 S	669.76	648.72	1'–3"	7'–9"	6'–3"
PIER 8 N	669.76	648.72	1'–3"	7'–9"	6'–3"
PIER 9 S	665.63	644.58	1'–3"	7'–9"	6'–3"
PIER 9 N	665.63	644.58	1'–3"	7'–9"	6'–3"
PIER 10 S	661.81	640.76	1'–3"	7'–1½"	3'–10¾"
PIER 10 N	661.81	640.76	1'–3"	7'–1½"	4'–3¼"

LOCATION	Elev. F	G	Elev. H	J	Elev. K
PIER 1 S	627.86	1'–0"	615.80	5'–9"	601.32
PIER 1 N	627.86	1'–0"	615.80	5'–9"	615.75
PIER 2 S	623.95	3'–3"	610.80	3'–6"	601.13
PIER 2 N	623.95	3'–3"	610.80	3'–6"	608.63
PIER 5 S	621.80	3'–3"	611.80	3'–3"	580.80
PIER 5 N	621.80	3'–3"	611.80	3'–3"	581.40
PIER 6 S	619.30	3'–3"	609.30	3'–3"	581.90
PIER 6 N	619.30	3'–3"	609.30	3'–3"	582.20
PIER 7 S	615.80	3'–3"	605.80	3'–3"	583.30
PIER 7 N	615.80	3'–3"	605.80	3'–3"	583.60
PIER 8 S	615.30	3'–3"	605.80	3'–9"	589.00
PIER 8 N	615.30	3'–3"	605.80	3'–9"	588.40
PIER 9 S	615.55	3'–3"	607.30	3'–0"	591.40
PIER 9 N	615.55	3'–3"	607.30	3'–0"	591.40
PIER 10 S	616.80	3'–1½"	607.55	3'–0"	597.13
PIER 10 N	616.80	3'–1½"	607.55	3'–0"	597.60

NOTES:

FOR DETAILS OF SECTIONS A–A AND B–B, AND LOCATIONS OF ELEVATIONS F, H, K AND DIMENSIONS G AND J SEE SHEET 236/270 .

FOR DRAINAGE NOTES, SCUPPER DETAILS, REDUCER DETAILS, PIPE SUPPORT DETAILS AND CLEANOUT DETAILS SEE SHEET 234/270.

MINIMUM CLEARANCE BETWEEN THE SOUTH EXTERIOR PIER SHAFTS AND THE C.P.P. ELECTRIC LINES IS 0'–11 1/2".

COUNTY BRIDGE NO. 84

HOWARD NEEDLES TAMMEN & BERGENDOFF
ARCHITECTS ENGINEERS PLANNERS
HNTB

DRAINAGE DETAILS
PIERS 1,2 AND 5 THRU 10
BR. NO. CUY – 6 – 1499
REHABILITATION OF
VETERANS MEMORIAL BRIDGE
(U.S. 6, 20, 42 & S.R. 3 OVER CUYAHOGA RIVER)
CLEVELAND CUYAHOGA COUNTY OHIO

DRAWN R.S.Y.	TRACED R.S.Y.	CHECKED B.E.B.	REVIEWED C.A.B.	REVISED
DATE 10/18/93	DATE 10/18/93	DATE 3/27/94	DATE 3/31/94	SHEET 235/270

\11646\DRAIN1.DWG

FHWA REGION	STATE	PROJECT	
5	OHIO		

369
412

CUYAHOGA COUNTY
CUY – 6 – 14.99

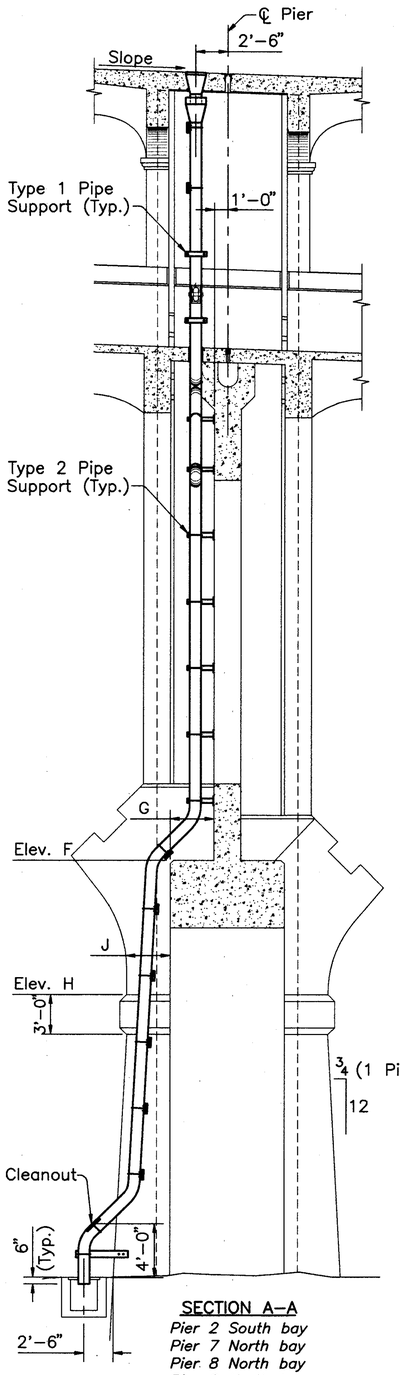

SECTION A–A
Pier 2 South bay
Pier 7 North bay
Pier 8 North bay
Pier 9 North bay

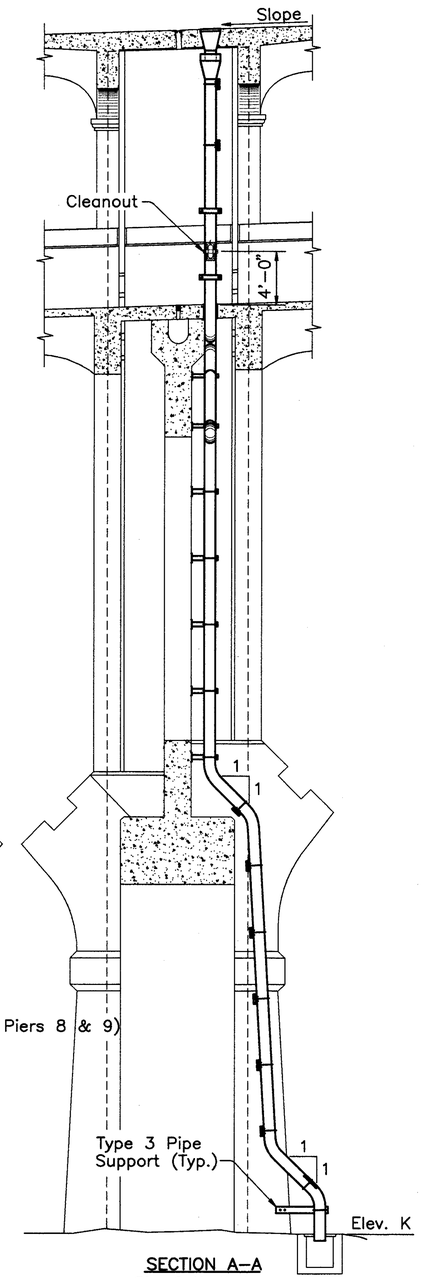

SECTION A–A
Pier 2 North bay
Pier 7 South bay
Pier 8 South bay
Pier 9 South bay

Note: Dimension and elevation nomenclature is typical for all pier shafts unless otherwise noted

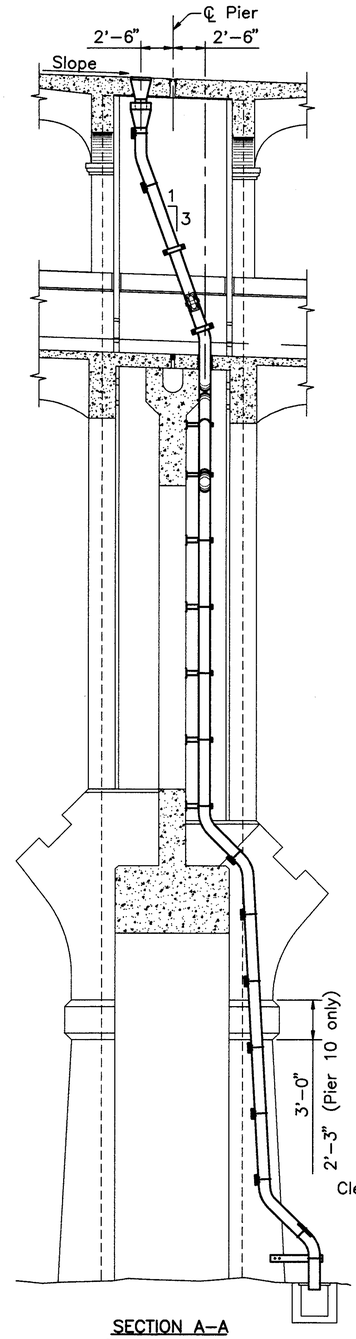

SECTION A–A
Pier 5 North bay
Pier 6 North bay
Pier 10 North bay

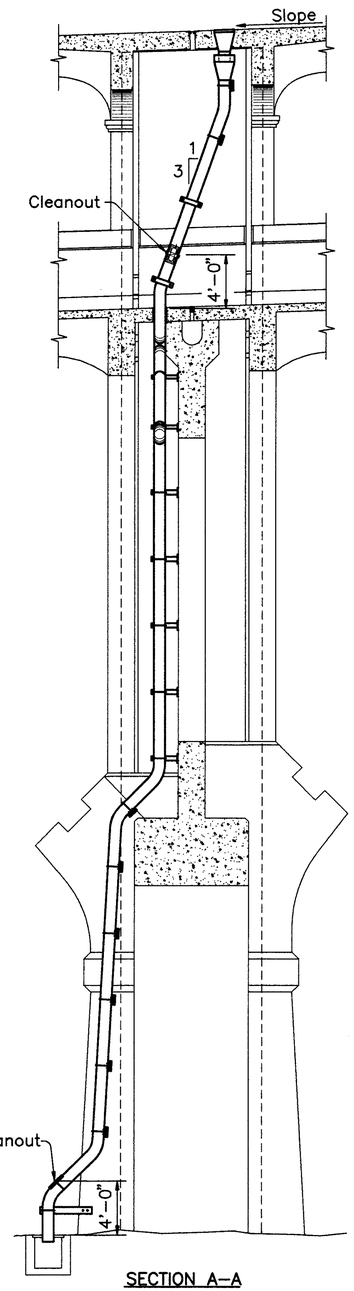

SECTION A–A
Pier 5 South bay
Pier 6 South bay
Pier 10 South bay

Note: In section A–A, existing lower pier walls with lower deck trough are shown. For replacement details of lower walls refer to appropriate pier replacement detail sheet.

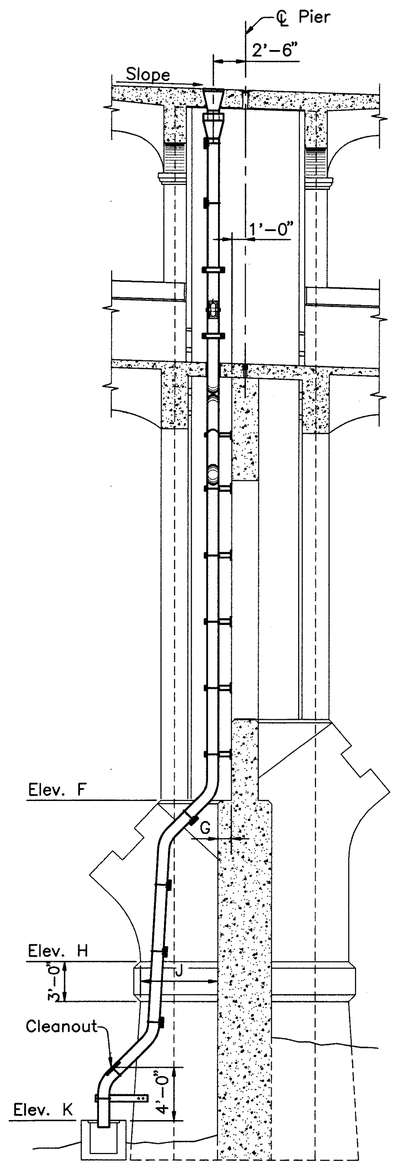

SECTION B–B
Pier 1 South bay

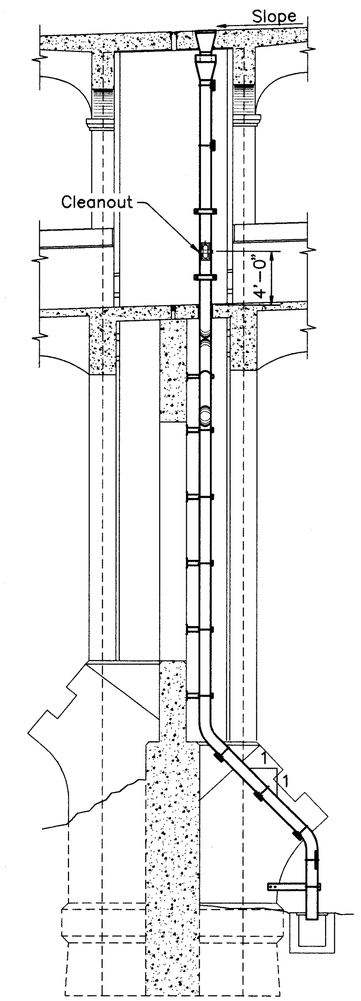

SECTION B–B
Pier 1 North bay

NOTES:

FOR TABLE OF DIMENSIONS AND ELEVATIONS SEE SHEET 235/270 .

FOR DRAINAGE NOTES, SCUPPER DETAILS, REDUCER DETAILS, PIPE SUPPORT DETAILS AND CLEANOUT DETAILS SEE SHEET 234/270 .

COUNTY BRIDGE NO. 84

HOWARD NEEDLES TAMMEN & BERGENDOFF
ARCHITECTS ENGINEERS PLANNERS
HNTB

DRAINAGE DETAILS
PIERS 1,2 AND 5 THRU 10
BR. NO. CUY – 6 – 1499
REHABILITATION OF
VETERANS MEMORIAL BRIDGE
(U.S. 6, 20, 42 & S.R. 3 OVER CUYAHOGA RIVER)

CLEVELAND CUYAHOGA COUNTY OHIO

DRAWN	TRACED	CHECKED	REVIEWED	REVISED
R.S.Y.	R.S.Y.	B.E.B.	C.A.B.	
DATE 10/18/93	DATE 10/18/93	DATE 3/27/94	DATE 3/31/94	SHEET 236/270

\11646\DRAIN2.DWG

FHWA REGION	STATE	PROJECT	
5	OHIO		

370/412

CUYAHOGA COUNTY
CUY – 6 – 14.99

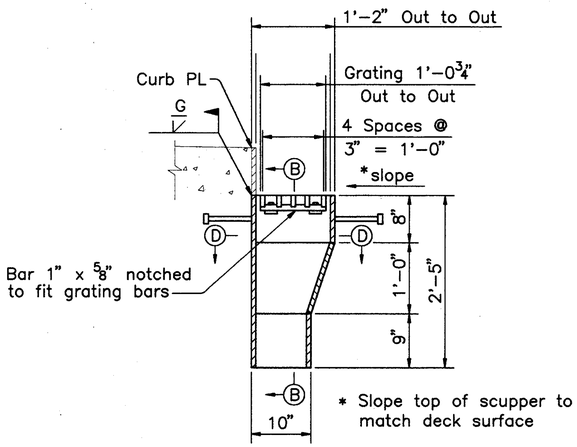

SECTION A–A
(MC 7 x 19.1 not shown)

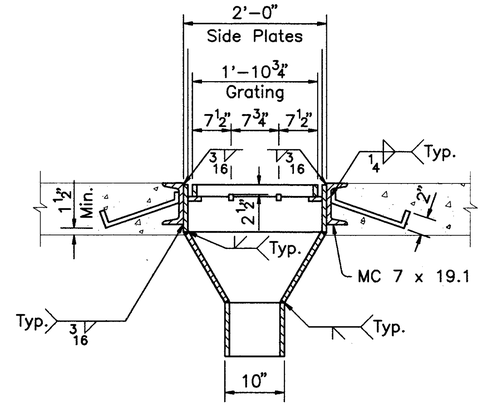

SECTION B–B

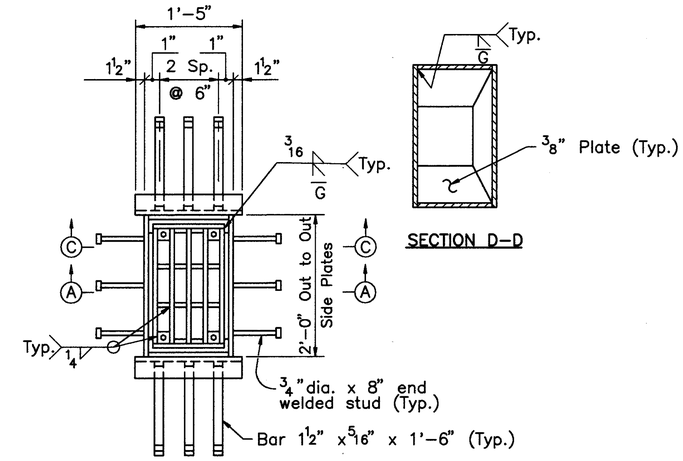

PLAN

SECTION D–D

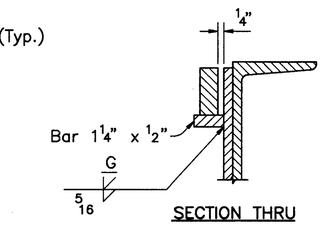

SECTION THRU GRATING SUPPORT

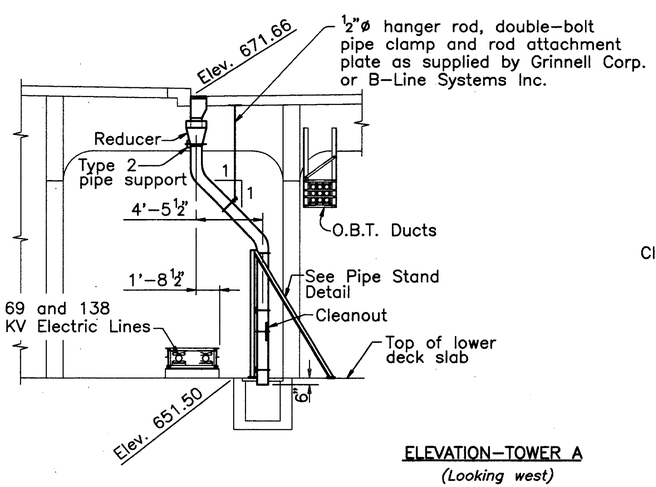

ELEVATION–TOWER A
(Looking west)

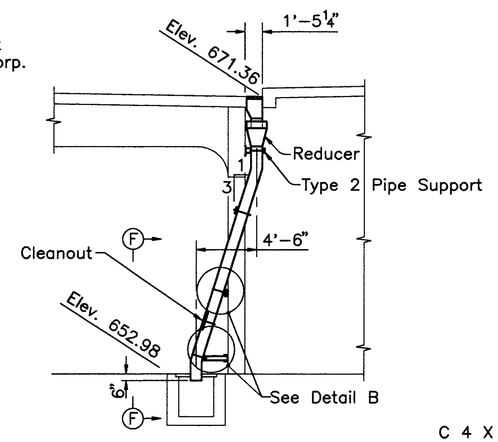

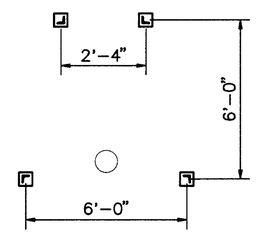

PLAN

SCUPPER DETAIL

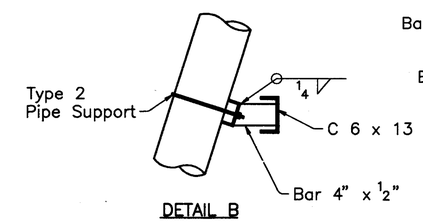

DETAIL B

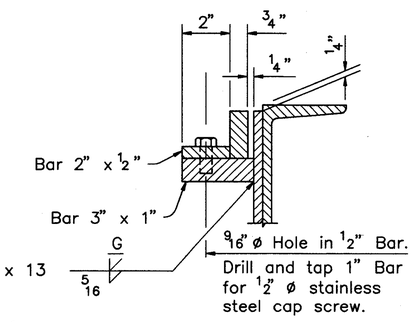

SECTION THRU GRATING FASTENING

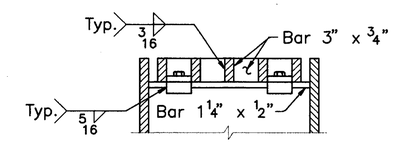

SECTION C–C

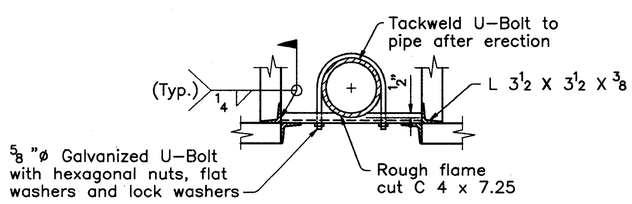

SECTION E–E

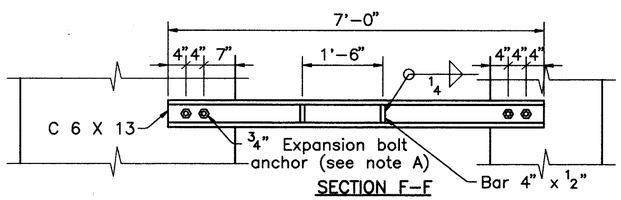

SECTION F–F

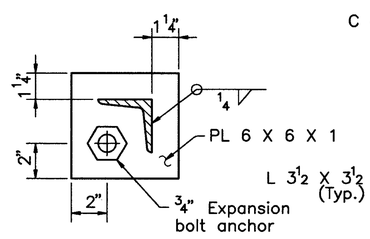

DETAIL A

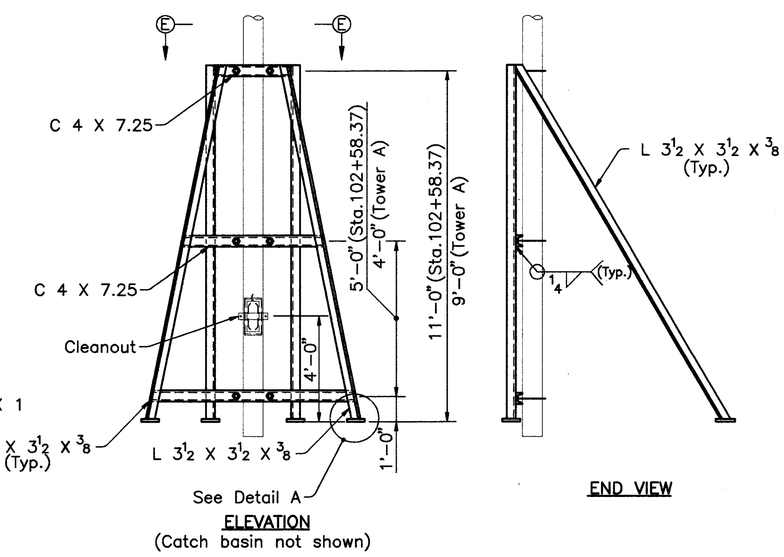

ELEVATION
(Catch basin not shown)

END VIEW

PIPE STAND DETAIL

NOTE:
FOR DRAINAGE NOTES, REDUCER DETAILS, PIPE SUPPORT DETAILS AND CLEANOUT DETAILS SEE SHEET 234/270.

COUNTY BRIDGE NO. 84

HOWARD NEEDLES TAMMEN & BERGENDOFF
ARCHITECTS ENGINEERS PLANNERS
HNTB

DRAINAGE DETAILS
TOWER A
BR. NO. CUY – 6 – 1499
REHABILITATION OF
VETERANS MEMORIAL BRIDGE
(U.S. 6, 20, 42 & S.R. 3 OVER CUYAHOGA RIVER)
CLEVELAND CUYAHOGA COUNTY OHIO

DRAWN R.S.Y.	TRACED R.S.Y.	CHECKED B.E.B.	REVIEWED C.A.B.	REVISED
DATE 3/30/94	DATE 3/30/94	DATE 3/28/94	DATE 3/31/94	SHEET 237/270

\11646\DRAINTA.DWG

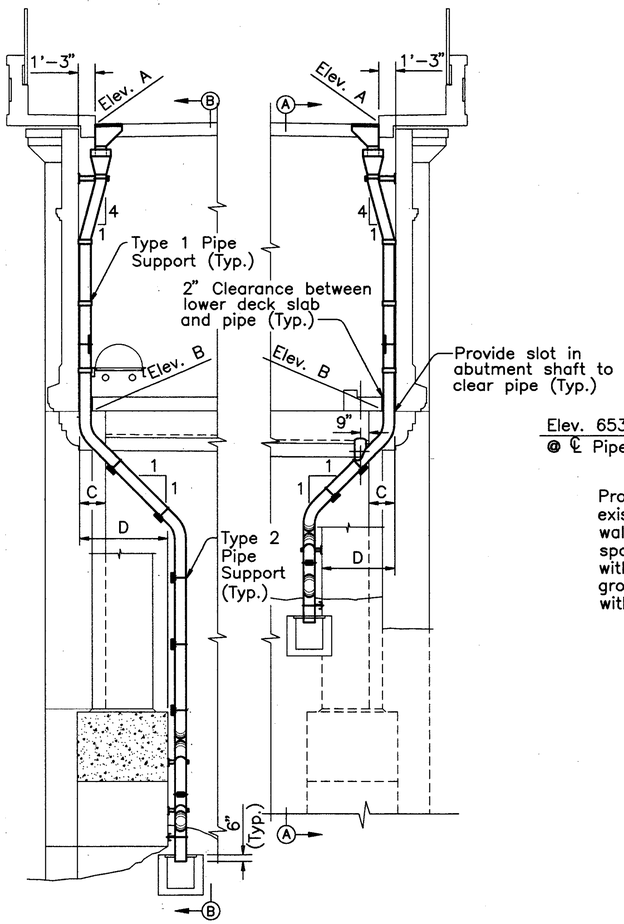

ELEVATION–WEST ABUTMENT
(Looking west)

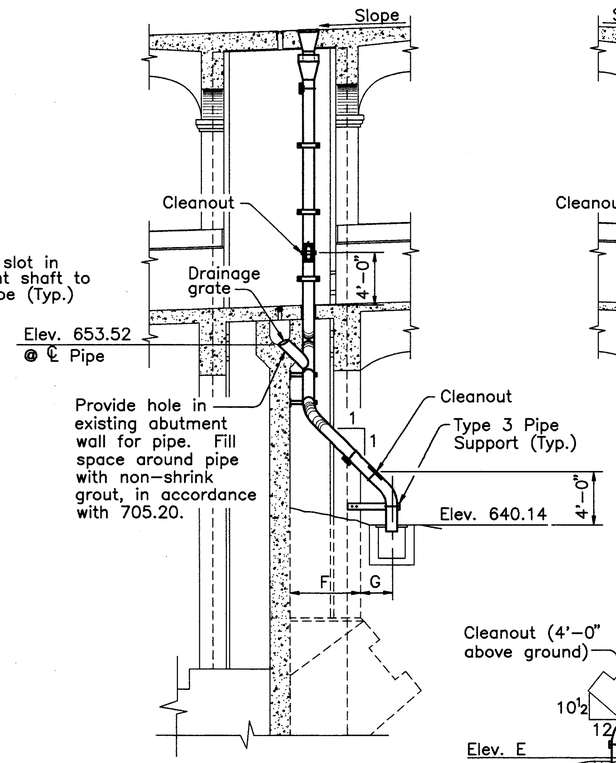

SECTION A–A

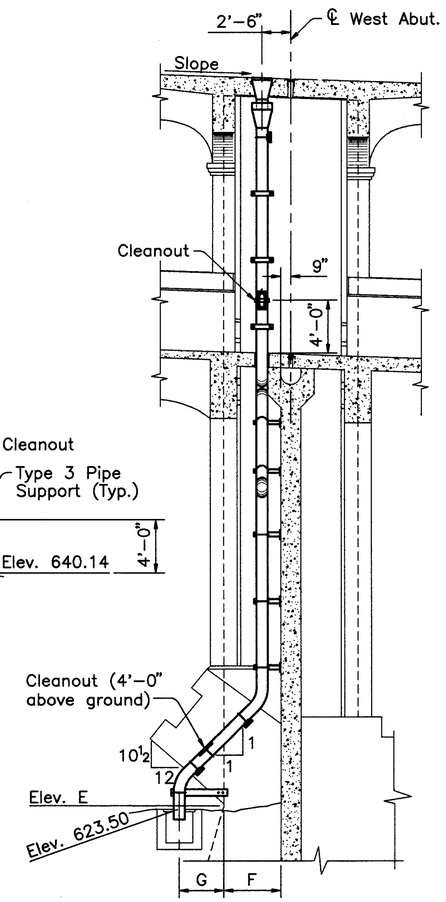

SECTION B–B

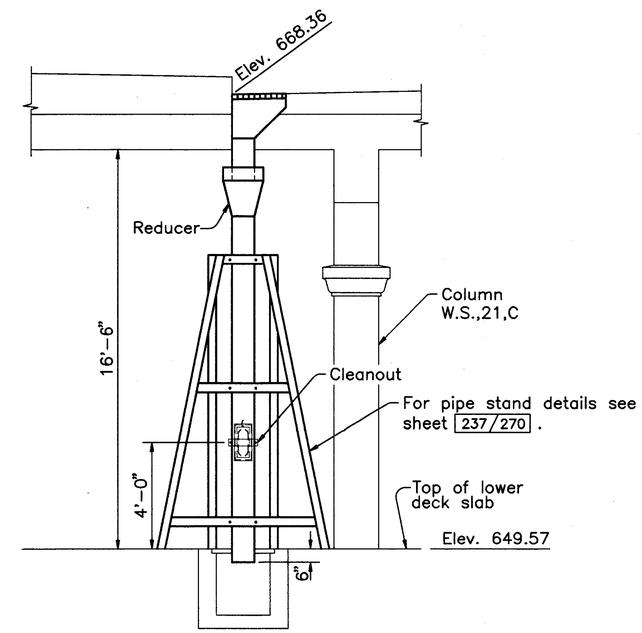

ELEVATION–WEST STATION AT STA. 102+58.37
(Looking west)

LOCATION	Elev. A	Elev. B	C	D	Elev. E	F	G
WEST ABUT. S	677.41	656.32	2'–0"	6'–7½"	623.55	4'–3"	3'–0"
WEST ABUT. N	677.41	656.32	2'–0"	6'–1"	———	5'–3"	2'–6"

NOTES:

FOR DRAINAGE NOTES, SCUPPER DETAILS, REDUCER DETAILS, PIPE SUPPORT DETAILS AND CLEANOUT DETAILS SEE SHEET 234/270 .

CLEARANCE BETWEEN THE SOUTH SHAFT OF THE WEST ABUTMENT AND THE C.P.P. ELECTRIC LINES IS 1'–1".

COUNTY BRIDGE NO. 84

HOWARD NEEDLES TAMMEN & BERGENDOFF
ARCHITECTS ENGINEERS PLANNERS
HNTB

DRAINAGE DETAILS
WEST STATION AND WEST ABUTMENT
BR. NO. CUY – 6 – 1499
REHABILITATION OF
VETERANS MEMORIAL BRIDGE
(U.S. 6, 20, 42 & S.R. 3 OVER CUYAHOGA RIVER)

CLEVELAND CUYAHOGA COUNTY OHIO

DRAWN R.S.Y.	TRACED R.S.Y.	CHECKED B.E.B.	REVIEWED C.A.B.	REVISED
DATE 10/18/93	DATE 10/18/93	DATE 3/28/94	DATE 3/31/94	SHEET 238/270

\11646\DRAIN.DWG

FHWA REGION	STATE	PROJECT	
5	OHIO		

372/412

CUYAHOGA COUNTY
CUY – 6 – 14.99

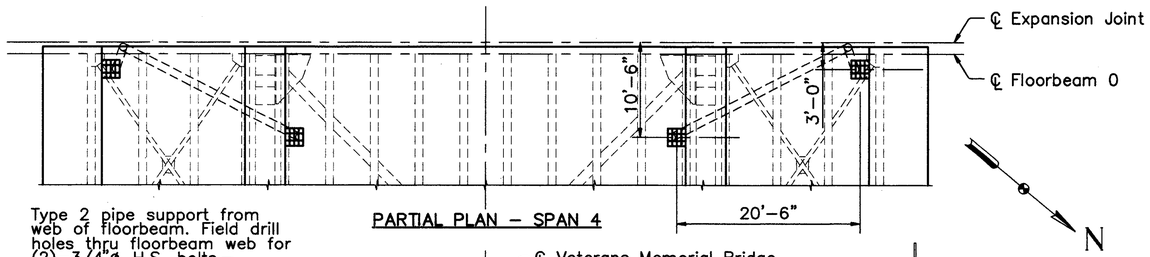

PARTIAL PLAN – SPAN 4

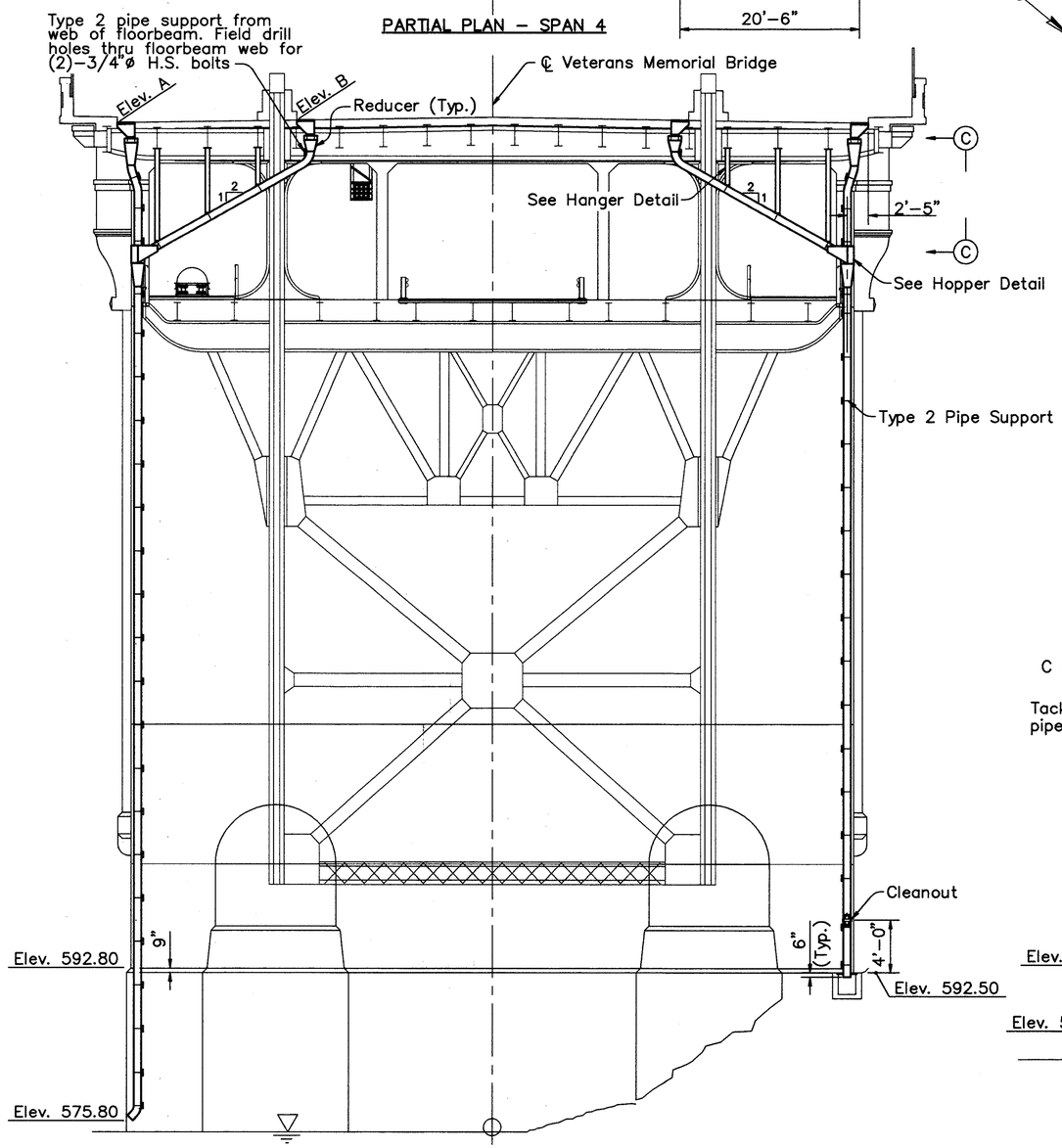

ELEVATION – PIER 3
(Looking west)
(Pier 4 similar, except as noted)

LOCATION	Elev. A	Elev. B
PIER 3 S	690.09	690.65
PIER 3 N	690.09	690.65
PIER 4 S	690.07	690.63
PIER 4 N	690.07	690.63

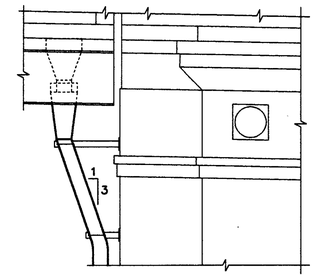

VIEW C–C

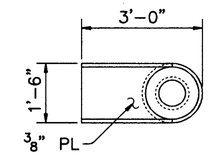

PLAN

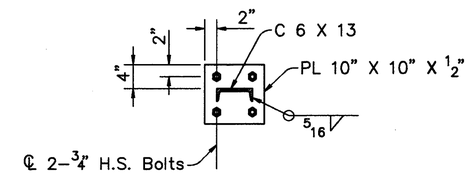

SECTION A–A

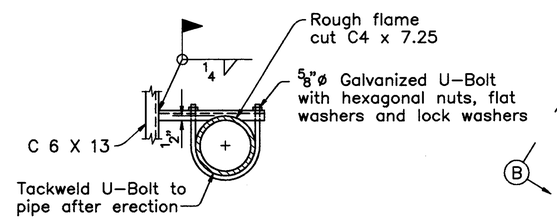

SECTION B–B

ELEVATION

HANGER DETAIL

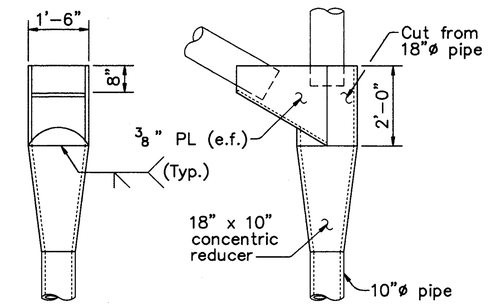

END VIEW

ELEVATION

HOPPER DETAIL

NOTES:

FOR DRAINAGE NOTES, SCUPPER DETAILS, REDUCER DETAILS, PIPE SUPPORT DETAILS AND CLEANOUT DETAILS SEE SHEET 234/270.

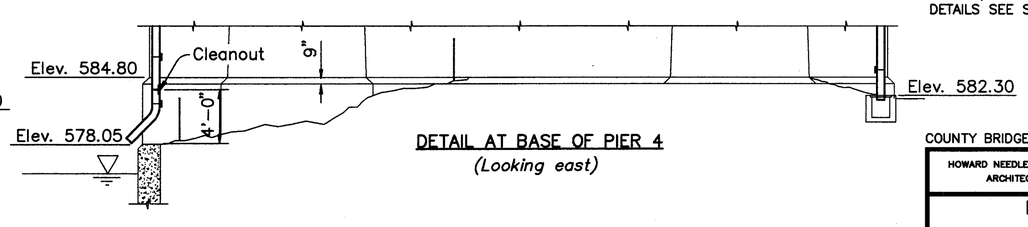

DETAIL AT BASE OF PIER 4
(Looking east)

COUNTY BRIDGE NO. 84

HOWARD NEEDLES TAMMEN & BERGENDOFF
ARCHITECTS ENGINEERS PLANNERS
HNTB

DRAINAGE DETAILS
PIERS 3 AND 4
BR. NO. CUY – 6 – 1499
REHABILITATION OF
VETERANS MEMORIAL BRIDGE
(U.S. 6, 20, 42 & S.R. 3 OVER CUYAHOGA RIVER)
CLEVELAND CUYAHOGA COUNTY OHIO

DRAWN R.S.Y.	TRACED R.S.Y.	CHECKED B.E.B.	REVIEWED C.A.B.	REVISED
DATE 10/20/93	DATE 10/20/93	DATE 3/28/94	DATE 3/31/94	SHEET 239/270

\11646\DRAIN3.DWG

FHWA REGION	STATE	PROJECT	
	OHIO		

373 / 412

CUYAHOGA COUNTY
CUY – 6 – 14.99

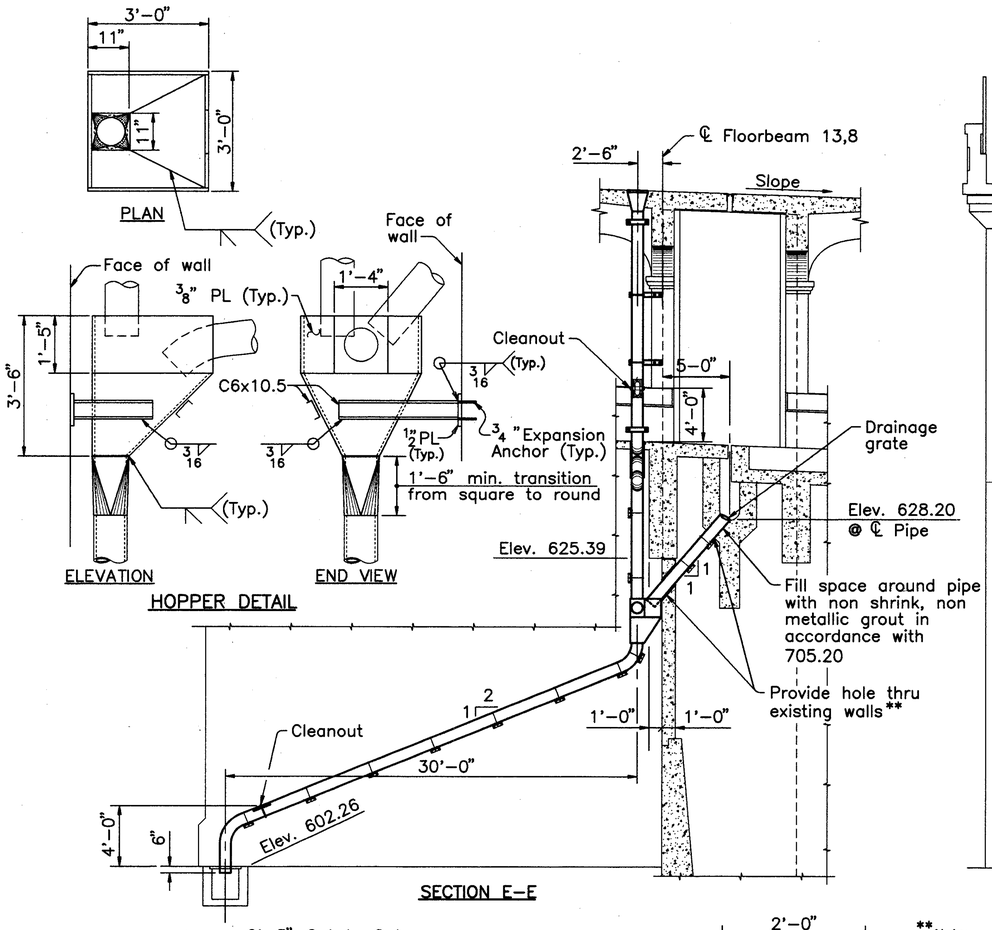

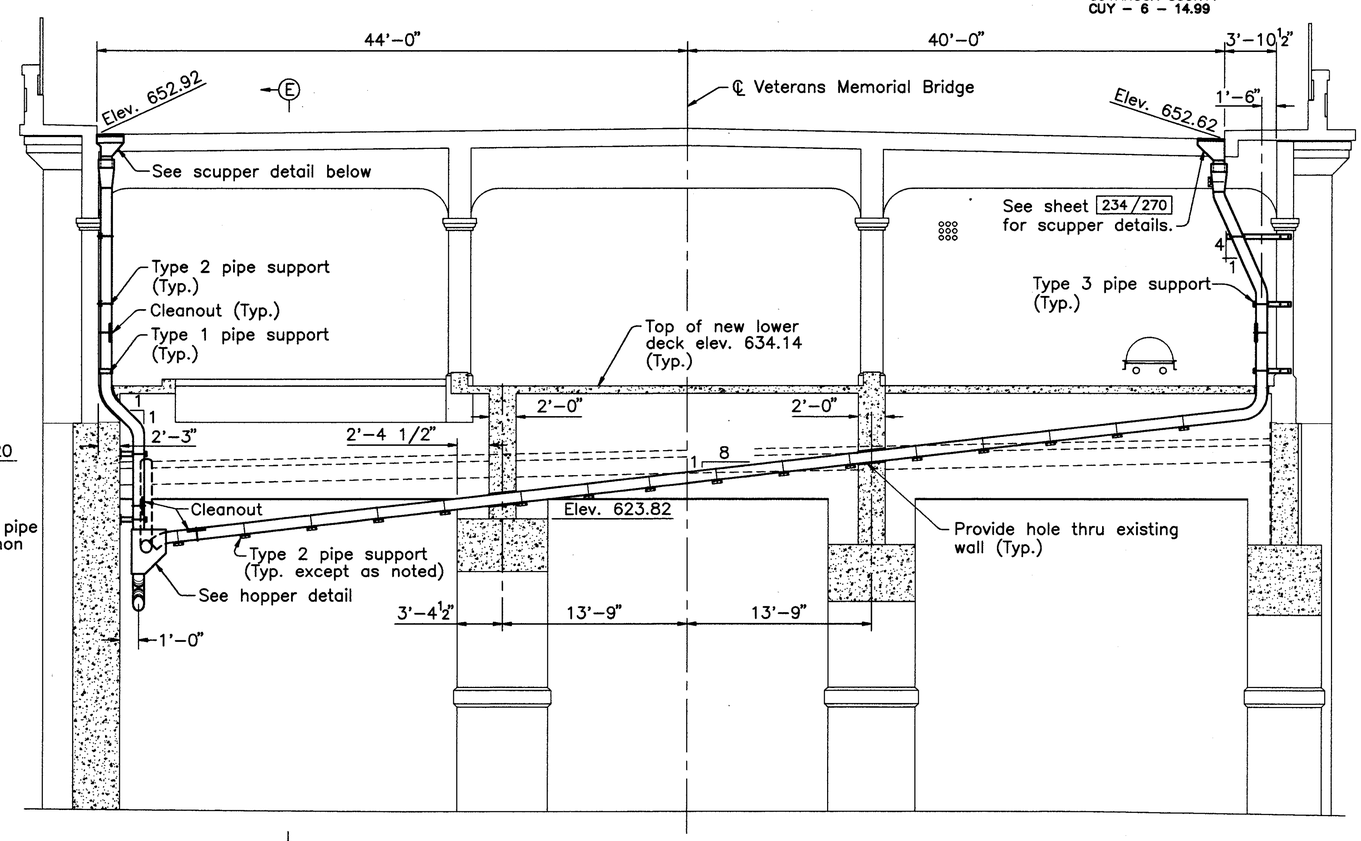

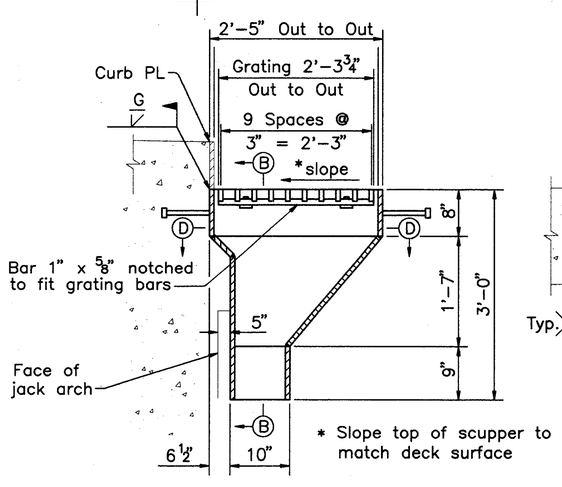

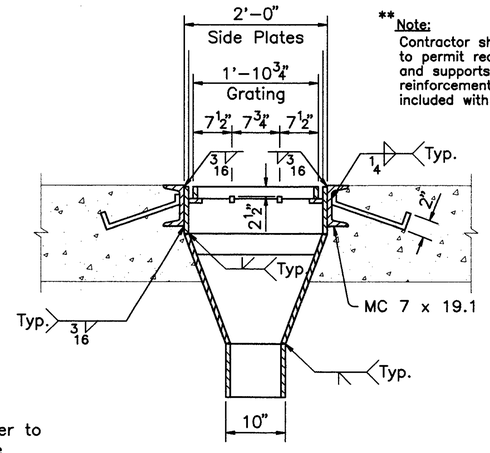

**Note:
Contractor shall remove sufficient exterior wall to permit required access for installation of pipe and supports. Wall shall be repaired using same reinforcement as existing wall. All work to be included with 518 for payment.

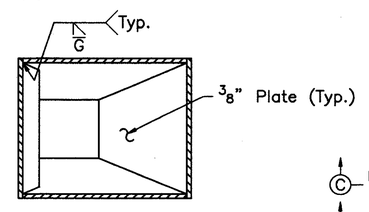

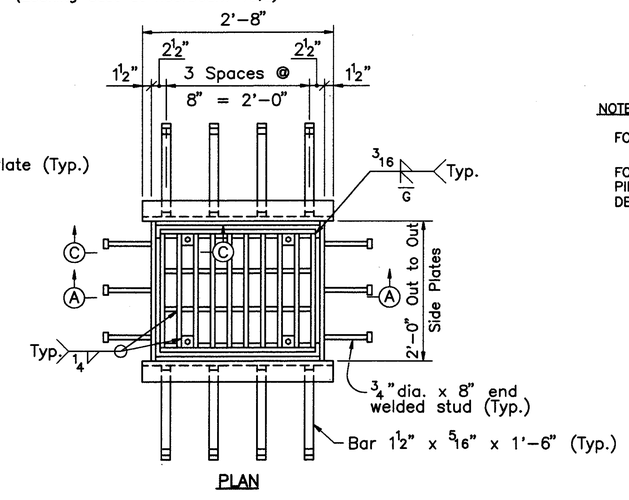

SCUPPER DETAIL

NOTES:

FOR SECTION C–C SEE SHEET 234/270.

FOR DRAINAGE NOTES, REDUCER DETAILS, PIPE SUPPORT DETAILS AND CLEANOUT DETAILS SEE SHEET 234/270.

COUNTY BRIDGE NO. 84

HOWARD NEEDLES TAMMEN & BERGENDOFF
ARCHITECTS ENGINEERS PLANNERS
HNTB

DRAINAGE DETAILS
EAST ABUTMENT
BR. NO. CUY – 6 – 1499
REHABILITATION OF
VETERANS MEMORIAL BRIDGE
(U.S. 6, 20, 42 & S.R. 3 OVER CUYAHOGA RIVER)

CLEVELAND CUYAHOGA COUNTY OHIO

DRAWN R.S.Y.	TRACED R.S.Y.	CHECKED B.E.B.	REVIEWED C.A.B.	REVISED
DATE 10/18/93	DATE 10/18/93	DATE 3/29/94	DATE 3/31/94	SHEET 240/270

\11646\DRAINEA.DWG

FHWA REGION	STATE	PROJECT	
5	OHIO		

374 / 412

CUYAHOGA COUNTY
CUY – 6 – 14.99

BAR SCHEDULE

MARK	NUMBER REQ'D	LENGTH FT.	LENGTH IN.	TYPE	A FT.	A IN.	B FT.	B IN.	C FT.	C IN.	D FT.	D IN.	E FT.	E IN.	SER. INCR. FT.	SER. INCR. IN.	WEIGHT (LBS.)
WEST 25TH STREET TUNNEL – COLUMNS – EPOXY COATED BARS																	
WTC 301	102	3	7	110	1	1	0	11									137
WTC402	11	6	6	109	1	8	1	4									48
WTC 801	10	10	6	STR													280
																TOTAL WEIGHT =	465
WEST 25TH STREET TUNNEL – JACK ARCHES – EPOXY COATED BARS																	
WTJA 401	12	8	4	109	3	0	0	11									67
WTJA402	36	8	6	109	3	1	0	11									204
WTJA403	12	9	0	109	3	4	0	11									72
WTJA412	2	10	10	109	3	10	1	4									14
WTJA413	6	11	0	109	3	11	1	4									44
WTJA414	2	11	6	109	4	2	1	4									15
																TOTAL WEIGHT =	416
WEST 25TH STREET TUNNEL – ROOF SLAB – EPOXY COATED BARS																	
WTTS402	164	3	9	STR													411
WTTS403	193	4	9	STR													612
WTTS404	32	5	9	STR													123
WTTS406	35	7	9	STR													181
WTTS408	53	5	9	STR													204
WTTS409	49	7	9	STR													254
WTTS410	1	4	0	STR													3
WTTS 411	1	5	0	STR													3
WTTS502	164	3	9	STR													641
WTTS503	193	4	9	STR													956
WTTS504	32	5	9	STR													192
WTTS506	35	7	9	STR													283
WTTS508	53	5	9	STR													318
WTTS509	49	7	9	STR													396
WTTS510	1	4	0	STR													4
WTTS 511	1	5	0	STR													5
WTTS 601	154	26	2	STR													6053
WTTS602	32	26	8	STR													1282
WTTS603	42	28	1	STR													1772
WTTS608	44	24	9	STR													1636
WTTS609	56	23	6	STR													1977
																TOTAL WEIGHT =	17,306
DETROIT AVENUE TUNNEL – COLUMNS – EPOXY COATED BARS																	
DTC 301	88	3	7	110	1	1	0	11									119
DTC302	12	3	11	110	1	2	1	1									18
DTC 401	22	5	0	109	1	4	0	11									73
DTC 801	16	10	6	STR													449
																TOTAL WEIGHT =	659
DETROIT AVENUE TUNNEL – JACK ARCHES – EPOXY COATED BARS																	
DTJA404	18	8	4	109	3	0	0	11									100
DTJA405	40	8	6	109	3	1	0	11									227
DTJA406	14	8	8	109	3	2	0	11									81
DTJA407	18	9	0	109	3	4	0	11									108
DTJA408	2	8	8	109	3	0	1	1									12
DTJA409	4	8	10	109	3	1	1	1									24
DTJA410	2	9	0	109	3	2	1	1									12
DTJA 411	2	9	4	109	3	4	1	1									12
																TOTAL WEIGHT =	576
DETROIT AVENUE TUNNEL – ROOF SLAB – EPOXY COATED BARS																	
DTTS 401	142	2	9	STR													261
DTTS402	236	3	9	STR													591
DTTS403	64	4	9	STR													203
DTTS405	64	6	9	STR													289
DTTS406	37	7	9	STR													192
DTTS407	64	8	9	STR													374
DTTS412	32	5	9	STR													123
DTTS413	32	9	9	STR													208

BAR SCHEDULE

MARK	NUMBER REQ'D	LENGTH FT.	LENGTH IN.	TYPE	A FT.	A IN.	B FT.	B IN.	C FT.	C IN.	D FT.	D IN.	E FT.	E IN.	SER. INCR. FT.	SER. INCR. IN.	WEIGHT (LBS.)
DETROIT AVENUE TUNNEL – ROOF SLAB – EPOXY COATED BARS (CONTINUED)																	
DTTS 501	142	2	9	STR													407
DTTS502	236	3	9	STR													923
DTTS503	64	4	9	STR													317
DTTS505	64	6	9	STR													451
DTTS506	37	7	9	STR													299
DTTS507	64	8	9	STR													584
DTTS512	32	5	9	STR													192
DTTS513	32	9	9	STR													325
DTTS 601	248	26	2	STR													9747
DTTS602	24	26	8	STR													961
DTTS604	28	28	5	STR													1195
DTTS605	20	29	3	STR													879
DTTS606	38	30	4	STR													1731
DTTS607	14	29	9	STR													626
																TOTAL WEIGHT =	20,878
WEST SIDE STATION – COLUMNS – EPOXY COATED BARS																	
WSC 301	42	4	4	110	1	3	1	4									68
WSC 401	146	6	6	109	1	8	1	4									634
WSC402	13	6	10	109	2	4	0	10									59
WSC403	64	5	0	109	1	4	0	11									214
WSC 601	4	12	9	STR													77
WSC 701	24	6	6	104	5	8	1	0									319
WSC702	24	15	9	STR													773
WSC 801	25	9	9	STR													651
WSC802	15	14	0	STR													561
WSC803	20	12	3	STR													654
WSC804	5	9	2	STR													122
WSC805	5	13	6	STR													180
WSC806	32	7	11	104	6	11	1	2									676
WSC807	32	15	9	STR													1346
																TOTAL WEIGHT =	6334
WEST SIDE STATION – JACK ARCHES – EPOXY COATED BARS																	
WSJA 401	2	14	0	STR													19
WSJA402	6	10	6	STR													42
WSJA403	3	33	8	STR													67
WSJA404	3	13	8	STR													27
WSJA405	42	5	10	STR													164
WSJA406	24	6	2	109	1	10	1	0									99
WSJA407	4	9	6	STR													25
WSJA408	2	2	9	STR													4
WSJA 501	11	9	0	109	2	11	1	4									103
WSJA502	2	6	6	109	1	8	1	4									14
WSJA503	2	6	8	109	1	9	1	4									14
WSJA504	2	6	10	109	1	10	1	4									14
WSJA505	2	7	0	109	1	11	1	4									15
WSJA506	2	7	2	109	2	0	1	4									15
WSJA507	2	7	10	109	2	4	1	4									16
WSJA508	2	8	8	109	2	9	1	4									18
WSJA509	2	10	10	109	3	10	1	4									23
WSJA510	2	12	0	109	4	5	1	4									25
WSJA 511	2	12	2	109	4	6	1	4									25
WSJA512	2	12	4	109	4	7	1	4									26
WSJA513	2	12	8	109	4	9	1	4									26
WSJA514	2	13	0	109	4	11	1	4									27
WSJA515	2	13	6	109	5	2	1	4									28
WSJA516	2	14	2	109	5	6	1	4									30
WSJA517	2	14	10	109	5	10	1	4									31
WSJA518	2	16	4	109	6	7	1	4									34
WSJA519	8	6	6	109	1	8	1	4									54
WSJA520	8	6	6	109	1	8	1	4									54
WSJA 521	8	6	8	109	1	9	1	4									56
WSJA522	8	6	10	109	1	10	1	4									57
WSJA523	8	7	0	109	1	11	1	4									58
WSJA524	8	7	4	109	2	1	1	4									61

BAR BENDING DIAGRAMS

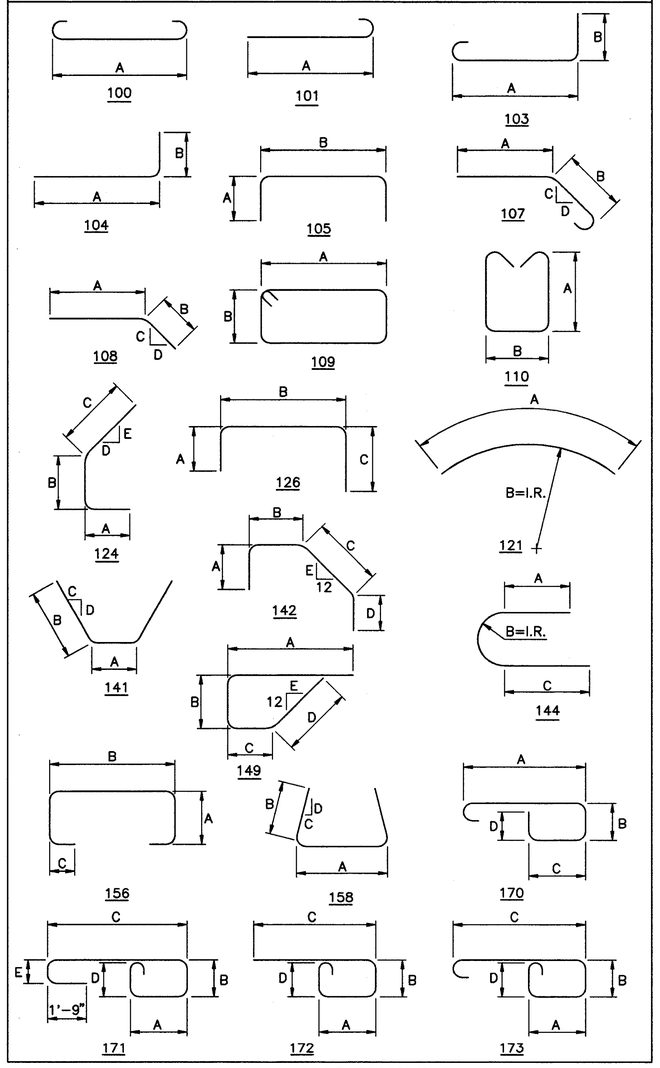

REINFORCING STEEL SAMPLES

REFER TO CMS SECTIONS 106.03, 700, 709.00, AND 709.01. SUFFICIENT ADDITIONAL REINFORCING STEEL SHALL BE PROVIDED FOR SAMPLING. RANDOM SAMPLES SHALL BE REPLACED IN THE STRUCTURES BY THE ADDITIONAL STEEL, SPLICED IN ACCORDANCE WITH 509.08

COUNTY BRIDGE NO. 84

HOWARD NEEDLES TAMMEN & BERGENDOFF
ARCHITECTS ENGINEERS PLANNERS
HNTB

REINFORCEMENT SCHEDULE
WEST APPROACH TUNNELS AND STATION
BR. NO. CUY – 6 – 1499
REHABILITATION OF
VETERANS MEMORIAL BRIDGE
(U.S. 6, 20, 42 & S.R. 3 OVER CUYAHOGA RIVER)
CLEVELAND CUYAHOGA COUNTY OHIO

DRAWN J.L.V.	TRACED J.L.V.	CHECKED B.E.B.	REVIEWED C.A.B.	REVISED
DATE 5/27/94	DATE 5/27/94	DATE 5/31/94	DATE 6/01/94	SHEET 241 / 270

\11646\CONCRETE\RSWEST1.DWG

FHWA REGION	STATE	PROJECT	
5	OHIO		

375 / 412

CUYAHOGA COUNTY
CUY – 6 – 14.99

BAR SCHEDULE

MARK	NUMBER REQ'D	LENGTH FT.	LENGTH IN.	TYPE	A FT.	A IN.	B FT.	B IN.	C FT.	C IN.	D FT.	D IN.	E FT.	E IN.	SER. INCR. FT.	SER. INCR. IN.	WEIGHT (LBS.)
WEST SIDE STATION – JACK ARCHES – EPOXY COATED BARS (CONTINUED)																	
WSJA525	6	8	2	109	2	6	1	4									51
WSJA526	6	9	4	109	3	1	1	4									58
WSJA527	6	11	4	109	4	1	1	4									71
WSJA528	21	8	2	109	2	6	1	4									179
WSJA529	4	7	3	110	1	4	3	11									30
WSJA530	4	7	3	110	1	4	3	11									30
WSJA 531	4	5	8	110	1	4	2	4									24
WSJA532	4	5	9	110	1	4	2	5									24
WSJA533	4	5	9	110	1	4	2	5									24
WSJA534	4	5	10	110	1	4	2	6									24
WSJA535	30	5	6	110	1	4	2	2									172
WSJA536	30	5	4	110	1	4	2	0									167
WSJA537	20	5	2	110	1	4	1	10									108
WSJA538	20	5	1	110	1	4	1	9									106
WSJA539	56	6	4	110	1	4	3	0									370
WSJA540	56	6	4	110	1	4	3	0									370
WSJA 541	26	6	10	110	1	4	3	6									185
WSJA542	26	6	8	110	1	4	3	4									181
WSJA543	36	6	6	110	1	4	3	2									244
WSJA544	36	6	5	110	1	4	3	1									241
WSJA545	16	26	6	STR													442
WSJA546	3	11	6	109	4	2	1	4									36
WSJA547	2 Ser.	11	4	109	4	1	1	4									
	of 4	9	4		3	1									0	8	86
WSJA548	3 Ser.	12	4	109	4	7	1	4									
	of 4	9	4		3	1									1	0	136
WSJA549	9	8	4	109	3	0	0	11									78
WSJA550	3	10	8	109	4	2	0	11									33
WSJA 551	2 Ser.	10	6	109	4	1	0	11									
	of 4	8	6		3	1									0	8	79
WSJA552	3 Ser.	11	6	109	4	7	0	11									
	of 4	8	6		3	1									1	0	125
WSJA553	2	5	11	110	1	4	2	7									12
WSJA554	2	6	0	110	1	4	2	8									13
WSJA555	2	6	2	110	1	4	2	10									13
WSJA556	2	6	4	110	1	4	3	0									13
WSJA557	2	6	6	110	1	4	3	2									14
WSJA558	2	6	8	110	1	4	3	4									14
WSJA559	2	6	10	110	1	4	3	6									14
WSJA 601	6	6	6	STR													59
WSJA602	16	7	6	STR													180
WSJA603	4	7	0	STR													42
WSJA604	6	6	0	STR													54
WSJA605	10	8	3	STR													124
WSJA606	10	8	6	STR													128
WSJA 701	8	15	8	100	14	0											256
WSJA702	4	12	0	100	10	4											98
WSJA703	2	16	2	100	14	6											66
WSJA704	9	35	4	100	33	8											650
WSJA705	9	15	4	100	13	8											282
WSJA706	4	27	9	104	25	5	2	6									227
WSJA707	4	30	0	STR													245
WSJA708	3	30	0	STR													184
WSJA709	3	24	0	STR													147
WSJA 801	4	30	0	STR													320
WSJA802	4	28	2	104	25	11	2	6									301
WSJA803	4	30	0	STR													320
WSJA804	4	24	6	STR													262
																TOTAL WEIGHT =	8983
WEST SIDE STATION – FLOORBEAM W.S.,32 – EPOXY COATED BARS																	
WSEB 401	24	25	7	STR													410
WSEB 501	5	10	9	109	3	11	1	2									56
WSEB502	7	10	7	109	3	10	1	2									77
WSEB503	5	10	5	109	3	9	1	2									54
WSEB504	5	9	1	109	3	1	1	2									47
WSEB505	5	9	3	109	3	2	1	2									48
WSEB506	8	9	5	109	3	3	1	2									79

BAR SCHEDULE

MARK	NUMBER REQ'D	LENGTH FT.	LENGTH IN.	TYPE	A FT.	A IN.	B FT.	B IN.	C FT.	C IN.	D FT.	D IN.	E FT.	E IN.	SER. INCR. FT.	SER. INCR. IN.	WEIGHT (LBS.)
WEST SIDE STATION – FLOORBEAM W.S.,32 – EPOXY COATED BARS (CONTINUED)																	
WSEB507	10	9	7	109	3	4	1	2									100
WSEB508	10	9	9	109	3	5	1	2									102
WSEB 601	66	3	7	101	2	11											355
WSEB 901	3	30	0	STR													306
WSEB902	6	22	6	101	21	1											459
WSEB 1001	3	30	0	STR													387
WSEB 1002	3	31	8	101	30	3											409
WSEB 1003	3	23	5	104	21	9	2	0									302
																TOTAL WEIGHT =	3191
WEST SIDE STATION – LOWER DECK SLAB – EPOXY COATED BARS																	
WSL 401	8	4	8	STR													25
WSL 402	24	10	2	STR													163
WSL 403	28	17	2	STR													321
WSL 404	14	13	8	STR													128
WSL 405	12	25	2	STR													202
WSL 406	10	29	2	STR													195
WSL 501	116	13	1	STR													1583
WSL 601	28	30	7	STR													1286
WSL 701	54	30	9	STR													3394
																TOTAL WEIGHT =	7297
WEST SIDE STATION – ROOF SLAB – EPOXY COATED BARS																	
WSS 401	86	6	6	STR													373
WSS402	32	21	8	STR													463
WSS403	7	14	8	STR													69
WSS404	12	12	0	STR													96
WSS405	18	27	0	STR													325
WSS406	18	29	5	104	27	0	2	6									354
WSS407	52	7	10	109	2	9	0	8									272
WSS408	4	30	0	STR													80
WSS409	6	5	5	172	1	6	0	8	2	4	0	8					22
WSS 501	86	6	6	STR													583
WSS502	32	21	8	STR													723
WSS503	7	14	8	STR													107
WSS504	12	12	0	STR													150
WSS505	36	27	0	STR													1014
WSS 601	8	21	9	STR													261
WSS602	4	19	2	STR													115
WSS603	112	25	9	STR													4332
WSS604	66	26	6	STR													2627
WSS605	72	29	0	STR													3136
WSS606	8	28	10	STR													346
WSS607	8	27	7	STR													331
WSS608	12	27	1	STR													488
WSS609	8	30	0	STR													360
WSS610	24	26	2	STR													943
WSS 611	52	31	0	STR													2421
WSS612	28	35	4	STR													1486
WSS613	90	4	4	STR													586
WSS 701	8	13	6	108	8	0	5	6	12		12						221
WSS702	8	10	0	STR													164
WSS703	100	18	2	STR													3713
																TOTAL WEIGHT =	26161
WEST SIDE STATION – WALLS AND BULKHEAD – EPOXY COATED BARS																	
WSWE 401	2	15	0	STR													20
WSWE 501	40	27	5	STR													1144
WSWE502	68	30	5	STR													2157
WSWE503	39	6	11	104	6	3	0	10									281
WSWE504	35	24	1	STR													879
WSWE505	10	9	9	105	2	10	4	4									102

BAR BENDING DIAGRAMS

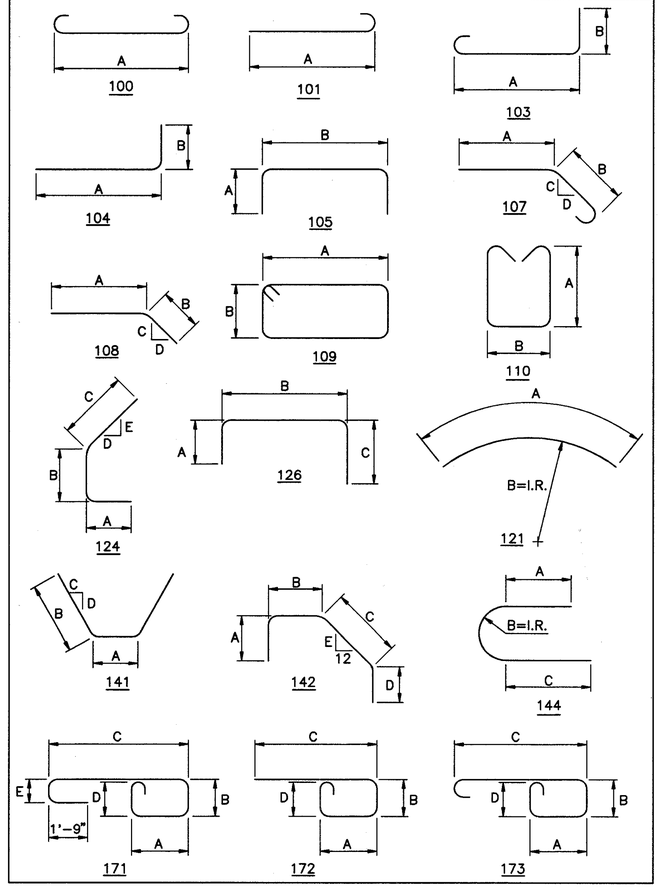

MECHANICAL SPLICE NOTE

AT LOCATIONS WHERE MECHANICAL SPLICES ARE REQUIRED, THE BAR DIMENSIONS ARE DETAILED TO THE CENTER OF THE SPLICE. IF ADDITIONAL BAR LENGTH IS REQUIRED FOR THE TYPE OF MECHANICAL SPLICE USED, THE CONTRACTOR SHALL ADJUST THE BAR DIMENSIONS ACCORDINGLY. PAYMENT SHALL BE BASED ON THE PLAN DIMENSIONS.

REINFORCING STEEL SAMPLES

REFER TO CMS SECTIONS 106.03, 700, 709.00, AND 709.01. SUFFICIENT ADDITIONAL REINFORCING STEEL SHALL BE PROVIDED FOR SAMPLING. RANDOM SAMPLES SHALL BE REPLACED IN THE STRUCTURES BY THE ADDITIONAL STEEL, SPLICED IN ACCORDANCE WITH 509.08

COUNTY BRIDGE NO. 84

HOWARD NEEDLES TAMMEN & BERGENDOFF
ARCHITECTS ENGINEERS PLANNERS
HNTB

REINFORCEMENT SCHEDULE
WEST SIDE STATION
BR. NO. CUY – 6 – 1499
REHABILITATION OF
VETERANS MEMORIAL BRIDGE
(U.S. 6, 20, 42 & S.R. 3 OVER CUYAHOGA RIVER)

CLEVELAND CUYAHOGA COUNTY OHIO

DRAWN J.L.V.	TRACED J.L.V.	CHECKED B.E.B.	REVIEWED C.A.B.	REVISED
DATE 5/27/94	DATE 5/27/94	DATE 5/31/94	DATE 6/01/94	SHEET 242 OF 270

\11646\CONCRETE\RSWEST1.DWG

FHWA REGION	STATE	PROJECT	
5	OHIO		

376 / 412

CUYAHOGA COUNTY
CUY – 6 – 14.99

BAR SCHEDULE

MARK	NUMBER REQ'D	LENGTH FT.	LENGTH IN.	TYPE	A FT.	A IN.	B FT.	B IN.	C FT.	C IN.	D FT.	D IN.	E FT.	E IN.	SER. INCR. FT.	SER. INCR. IN.	WEIGHT (LBS.)
WEST SIDE STATION – WALLS AND BULKHEAD – EPOXY COATED BARS (CONTINUED)																	
WSWE506	2	18	1	105	2	10	12	8									38
WSWE507	10	9	8	108	5	8	4	0	12	12							101
WSWE508	10	6	8	105	2	6	1	11									70
WSWE509	10	8	10	108	2	10	6	0	12	12							92
WSWE510	10	9	0	108	6	6	2	6	12	12							94
WSWE 511	21	3	3	STR													71
WSWE512	1 Ser.	24	1	STR													
	of 4	19	11												1	4-5/8	92
WSWE513	40	20	0	STR													834
WSWE514	14	9	8	104	6	11	2	10									141
WSWE515	14	10	7	104	7	10	2	10									155
WSWE516	7	6	9	109	2	2	0	11									49
WSWE517	5	20	3	STR													106
WSWE518	6	5	3	109	1	0	1	4									33
WSWE 601	3	15	0	STR													68
WSWE602	18	11	3	STR													304
WSWE 801	35	24	4	STR													2274
WSWE802	38	12	7	104	11	5	1	4									1277
WSWE803	39	9	5	104	8	3	1	4									981
WSWE804	122	12	8	STR													4126
WSWE805	41	14	6	100	12	8											1587
WSWE806	1 Ser.	24	4	STR													
	of 4	20	2												1	4-5/8	238
WSWE807	56	30	2	100	28	4											4511
WSWE 901	3	17	6	100	15	0											179
WSWE902	18	20	3	STR													1239
																TOTAL WEIGHT =	23,243
WEST SIDE STATION – SIDEWALK AND SLAB – EPOXY COATED BARS																	
WSES 401	68	6	2	109	1	4	1	6									280
WSES402	32	2	1	101	1	7											———
WSES 501	51	26	6	STR													1410
WSES502	102	27	6	STR													2926
WSES503	2 SER.	9	3	STR													
	OF 5	29	9												5	1-1/2	203
WSES504	73	4	9	109	1	3	0	10									362
WSES505	76	31	10	STR													2523
WSES506	9	12	9	100	11	7											120
WSES507	250	9	11	101	9	4											2586
WSES508	40	30	0	STR													1252
WSES509	2	35	0	STR													73
WSES510	16	29	7	STR													494
WSES 511	58	25	5	101	24	10											1538
WSES 601	8	7	9	STR													93
WSES602	10	13	6	STR													———
WSES603	173	10	8	101	10	0											2772
WSES604	366	3	10	110	1	3	0	7									2107
WSES605	193	20	11	101	20	3											6063
WSES606	173	17	0	STR													4417
WSES607	1 SER.	4	11	101	4	3											
	OF 45	10	0		9	4									0	1-3/8	504
WSES608	145	10	7	127	1	5	7	10	0	10	1	0					2305
WSES609	73	9	2	100	7	10											1005
WSES610	83	7	5	127	5	0	1	5	1	0	0	6					925
WSES 611	83	8	3	101	7	7											1028
WSES612	166	7	2	101	6	6											1787
WSES613	9	12	11	100	11	7											175
WSES614	250	10	6	101	9	10											3943
WSES615	58	25	11	101	25	3											2258
WSES 701	12	30	6	STR													748
																TOTAL WEIGHT =	43,897

BAR SCHEDULE

MARK	NUMBER REQ'D	LENGTH FT.	LENGTH IN.	TYPE	A FT.	A IN.	B FT.	B IN.	C FT.	C IN.	D FT.	D IN.	E FT.	E IN.	SER. INCR. FT.	SER. INCR. IN.	WEIGHT (LBS.)

BAR BENDING DIAGRAMS

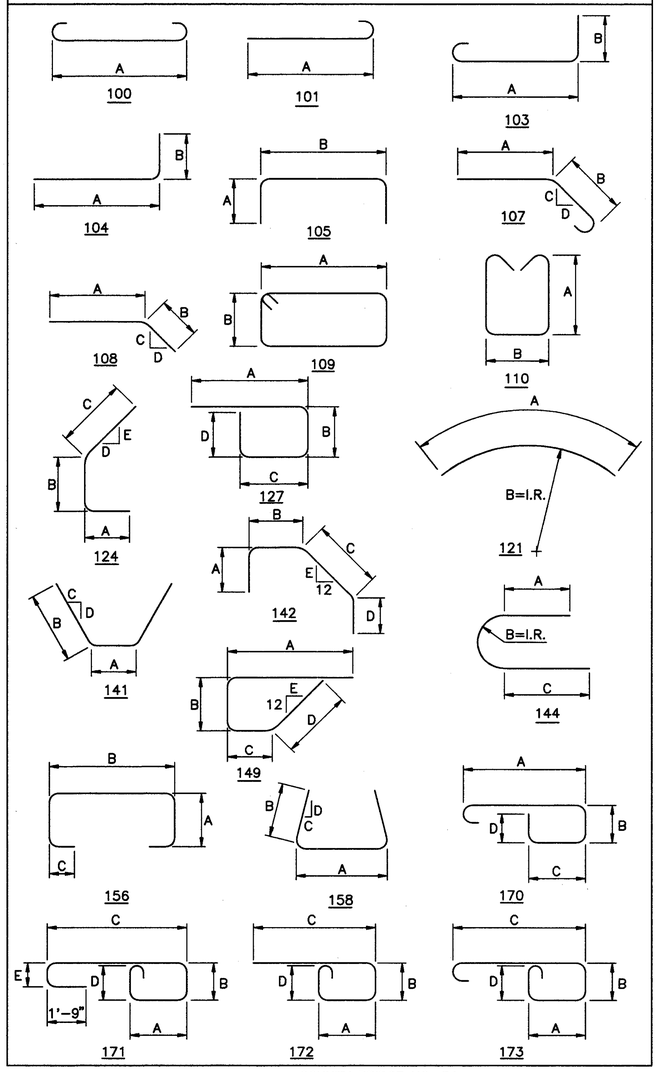

COUNTY BRIDGE NO. 84

REINFORCING STEEL SAMPLES

REFER TO CMS SECTIONS 106.03, 700, 709.00, AND 709.01. SUFFICIENT ADDITIONAL REINFORCING STEEL SHALL BE PROVIDED FOR SAMPLING. RANDOM SAMPLES SHALL BE REPLACED IN THE STRUCTURES BY THE ADDITIONAL STEEL, SPLICED IN ACCORDANCE WITH 509.08

HOWARD NEEDLES TAMMEN & BERGENDOFF
ARCHITECTS ENGINEERS PLANNERS
HNTB

REINFORCEMENT SCHEDULE
WEST SIDE STATION
BR. NO. CUY – 6 – 1499
REHABILITATION OF
VETERANS MEMORIAL BRIDGE
(U.S. 6, 20, 42 & S.R. 3 OVER CUYAHOGA RIVER)

CLEVELAND CUYAHOGA COUNTY OHIO

DRAWN J.L.V.	TRACED J.L.V.	CHECKED B.E.B.	REVIEWED C.A.B.	REVISED
DATE 5/27/94	DATE 5/27/94	DATE 5/31/94	DATE 6/01/94	SHEET 242A/270

\11646\CONCRETE\RSWEST1.DWG

FHWA REGION	STATE	PROJECT	
5	OHIO		

377/412

CUYAHOGA COUNTY
CUY – 6 – 14.99

BAR SCHEDULE

MARK	NUMBER REQ'D	LENGTH FT.	LENGTH IN.	TYPE	A FT.	A IN.	B FT.	B IN.	C FT.	C IN.	D FT.	D IN.	E FT.	E IN.	SER. INCR. FT.	SER. INCR. IN.	WEIGHT (LBS.)
TOWER A – EPOXY COATED BARS																	
TAE 401	23	12	3	105	2	3	7	11									188
TAE 402	106	12	9	STR													903
TAE 403	2	11	6	STR													15
TAE 404	10	31	5	STR													210
TAE 405	17	5	10	109	1	9	0	11									66
TAE 406	66	23	6	STR													1036
TAE 407	40	2	4	STR													62
TAE 408	23	14	0	105	2	3	9	8									215
TAE 409	26	8	9	STR													152
TAE 410	16	22	0	STR													235
TAE 411	48	7	8	149	2	6	2	2	1	0	2	2	12				246
TAE 412	8	12	2	STR													65
TAE 413	4	11	7	STR													31
TAE 414	4	10	0	STR													27
TAE 415	8	12	9	STR													68
TAE 416	4	12	5	STR													33
TAE 417	4	11	10	STR													32
TAE 418	16	6	11	STR													74
TAE 419	38	5	0	109	1	9	0	11									127
TAE 420	16	18	0	STR													192
TAE 421	20	30	0	STR													401
TAE 422	20	18	4	STR													245
TAE 423	4	7	0	STR													19
TAE 424	6	3	9	STR													15
TAE 501	28	5	0	STR													146
TAE 502	10	10	11	109	4	0	1	2									114
TAE 503	13	10	9	109	3	11	1	2									146
TAE 504	18	9	5	109	3	3	1	2									177
TAE 505	17	9	7	109	3	4	1	2									170
TAE 506	19	9	9	109	3	5	1	2									193
TAE 507	22	9	11	109	3	6	1	2									228
TAE 508	13	10	1	109	3	7	1	2									137
TAE 509	14	10	3	109	3	8	1	2									150
TAE 510	6	10	5	109	3	9	1	2									65
TAE 511	11	8	11	109	3	0	1	2									102
TAE 512	5	9	1	109	3	1	1	2									47
TAE 513	11	9	3	109	3	2	1	2									106
TAE 514	8	3	0	STR													25
TAE 515	49	9	9	109	3	8	0	11									498
TAE 516	49	8	3	109	2	11	0	11									422
TAE 517	14	13	3	109	5	5	0	11									193
TAE 601	6	6	11	STR													62
TAE 602	6	8	3	100	6	11											74
TAE 701	4	30	0	STR													245
TAE 702	4	22	0	STR													180
TAE 703	2	31	5	STR													128
TAE 704	12	18	0	STR													442
TAE 801	6	30	0	STR													481
TAE 802	6	23	8	101	22	9											379
TAE 803	3	28	5	STR													228
TAE 804	6	12	11	101	12	0											207
TAE 805	30	12	6	STR													1001
TAE 806	6	18	0	STR													288
TAE 807	3	31	5	STR													252
TAE 1101	14	22	0	STR													1636
TAE 1102	14	18	0	STR													1339
															TOTAL WEIGHT =		14,518

BAR SCHEDULE

MARK	NUMBER REQ'D	LENGTH FT.	LENGTH IN.	TYPE	A FT.	A IN.	B FT.	B IN.	C FT.	C IN.	D FT.	D IN.	E FT.	E IN.	SER. INCR. FT.	SER. INCR. IN.	WEIGHT (LBS.)
TOWER B – EPOXY COATED BARS																	
TBE 401	32	30	0	STR													641
TBE 402	16	34	5	STR													368
TBE 403	72	7	4	149	2	6	2	2	0	8	2	2	12				353
TBE 404	8	12	2	STR													65
TBE 405	4	10	0	STR													27
TBE 406	8	13	9	104	11	6	2	4									73
TBE 407	8	12	10	104	10	7	2	4									69
TBE 408	4	11	3	105	1	9	7	11									30
TBE 409	4	13	0	105	1	9	9	8									35
TBE 410	159	5	0	109	0	11	1	4									531
TBE 411	4	11	7	STR													31
TBE 412	16	12	9	STR													136
TBE 413	8	12	5	STR													66
TBE 414	8	11	10	STR													63
TBE 415	20	5	3	105	2	3	0	11									70
TBE 501	40	5	0	STR													209
TBE 502	12	10	1	109	3	10	0	11									126
TBE 503	20	8	9	109	3	2	0	11									183
TBE 504	24	8	11	109	3	3	0	11									223
TBE 505	36	9	1	109	3	4	0	11									341
TBE 506	16	9	3	109	3	5	0	11									154
TBE 507	44	9	5	109	3	6	0	11									432
TBE 508	22	9	7	109	3	7	0	11									220
TBE 601	12	3	9	STR													68
TBE 602	12	4	3	STR													77
TBE 701	54	18	0	STR													1987
TBE 1001	8	22	7	104	19	11	3	0									777
TBE 1002	8	24	11	STR													858
TBE 1003	4	18	10	101	17	5											324
TBE 1004	12	33	10	101	32	5											1747
TBE 1005	16	21	3	STR													1463
TBE 1006	6	24	0	STR													620
TBE 1007	8	40	0	STR													1377
TBE 1008	6	25	0	STR													645
															TOTAL WEIGHT =		14,389

BAR BENDING DIAGRAMS

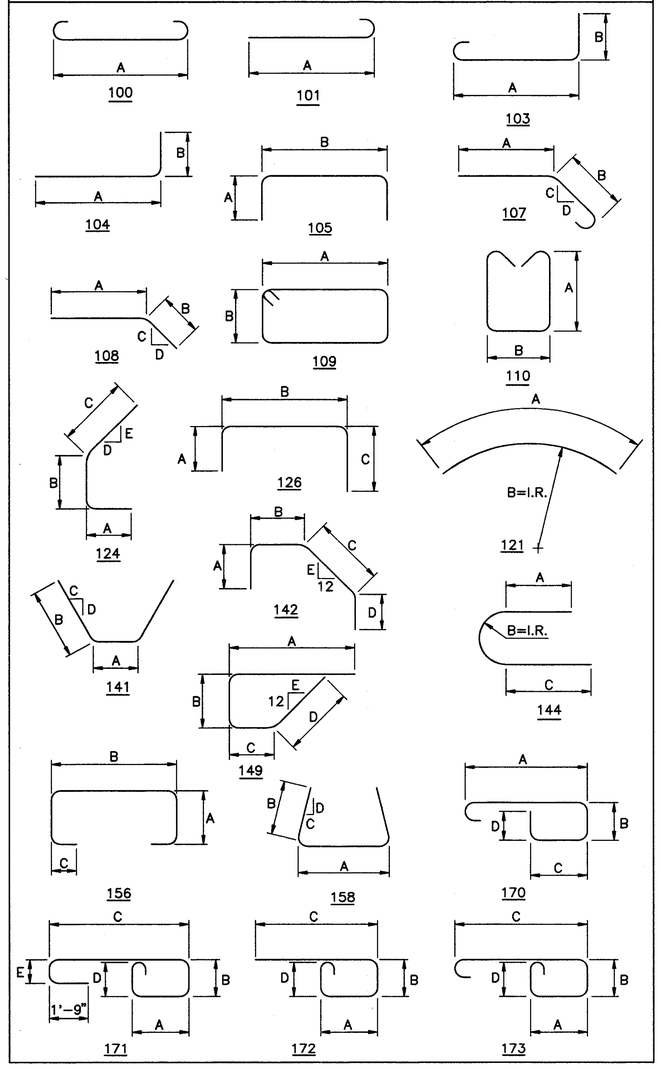

COUNTY BRIDGE NO. 84

REINFORCING STEEL SAMPLES

REFER TO CMS SECTIONS 106.03, 700, 709.00, AND 709.01. SUFFICIENT ADDITIONAL REINFORCING STEEL SHALL BE PROVIDED FOR SAMPLING. RANDOM SAMPLES SHALL BE REPLACED IN THE STRUCTURES BY THE ADDITIONAL STEEL, SPLICED IN ACCORDANCE WITH 509.08

HOWARD NEEDLES TAMMEN & BERGENDOFF
ARCHITECTS ENGINEERS PLANNERS
HNTB

REINFORCEMENT SCHEDULE
TOWERS A AND B
BR. NO. CUY – 6 – 1499
REHABILITATION OF
VETERANS MEMORIAL BRIDGE
(U.S. 6, 20, 42 & S.R. 3 OVER CUYAHOGA RIVER)
CLEVELAND CUYAHOGA COUNTY OHIO

DRAWN J.L.V.	TRACED J.L.V.	CHECKED B.E.B.	REVIEWED C.A.B.	REVISED
DATE 5/27/94	DATE 5/27/94	DATE 5/31/94	DATE 6/01/94	SHEET 243/270

\11646\CONCRETE\RSWEST1.DWG

FHWA REGION	STATE	PROJECT	
5	OHIO		

378 / 412

CUYAHOGA COUNTY
CUY – 6 – 14.99

BAR SCHEDULE

MARK	NUMBER REQ'D	LENGTH FT.	LENGTH IN.	TYPE	A FT.	A IN.	B FT.	B IN.	C FT.	C IN.	D FT.	D IN.	E FT.	E IN.	SER. INCR. FT.	SER. INCR. IN.	WEIGHT (LBS.)
WEST ABUTMENT – EPOXY COATED BARS																	
WEA 401	80	8	4	126	2	0	0	11	5	7							445
WEA 402	40	11	0	105	2	0	7	2									294
WEA 403	28	9	0	149	3	9	1	8	1	0	2	9	12				168
WEA 404	10	12	2	STR													81
WEA 405	4	7	8	104	6	3	1	6									20
WEA 406	23	8	1	126	2	0	0	8	5	7							124
WEA 407	23	10	7	126	2	0	3	2	5	7							163
WEA 408	23	12	10	126	1	10	7	2	4	0							197
WEA 409	23	6	3	105	2	9	0	11									96
WEA 410	6	22	0	STR													88
WEA 411	38	8	10	STR													224
WEA 412	16	14	0	STR													150
WEA 413	16	5	8	108	2	10	2	10									61
WEA 414	3	16	9	STR													34
WEA 415	17	2	4	101	1	10											26
WEA 416	17	4	8	104	4	0	0	9									53
WEA 417	1	4	6	STR													3
WEA 418	8	4	6	100	3	6											24
WEA 419	8	6	8	144	1	9	1	0	1	9							36
WEA 420	38	2	9	STR													70
WEA 430	4	4	6	105	1	6	1	8									12
WEA 431	28	6	0	107	3	0	2	6	12		12						112
WEA 501	56	19	6	STR													1139
WEA 502	53	3	6	STR													193
WEA 503	27	22	0	STR													620
																TOTAL WEIGHT =	4433
PIER 1 – EPOXY COATED BARS																	
1EP 401	80	8	7	126	2	0	0	11	5	10							459
1EP 402	40	11	6	105	2	0	7	8									307
1EP 403	28	9	0	149	3	9	1	8	1	0	2	9	12				168
1EP 404	10	12	8	STR													85
1EP 405	4	7	11	104	6	6	1	6									21
1EP 406	52	14	10	105	1	8	11	8									515
1EP 407	108	9	4	105	0	11	7	8									673
1EP 408	16	12	6	STR													134
1EP 409	14	17	6	105	8	0	1	8									164
1EP 410	6	8	6	STR													34
1EP 411	54	10	10	126	2	0	3	2	5	10							391
1EP 412	27	11	6	105	2	0	7	8									207
1EP 413	28	17	6	105	8	0	1	8									327
1EP 414	6	17	0	STR													68
1EP 415	46	37	6	STR													1152
1EP 416	16	4	0	STR													43
1EP 417	24	9	0	STR													144
1EP 418	12	10	0	STR													80
1EP 419	69	4	10	105	1	8	1	8									223
1EP 420	15	7	6	STR													75
1EP 421	14	13	0	105	4	9	3	8									122
1EP 422	14	9	0	105	2	9	3	8									84
1EP 423	10	7	0	STR													47
1EP 424	33	9	6	105	4	0	1	8									209
1EP 425	2	4	3	STR													6
1EP 426	96	25	4	STR													1625
1EP 427	66	8	4	STR													367
1EP 428	24	13	5	STR													215
1EP 429	12	13	4	105	5	11	1	8									107
1EP 430	4	4	6	105	1	6	1	8									12
1EP 431	28	6	0	107	3	0	2	6	12		12						112
1EP 501	56	19	6	STR													1139
1EP 502	26	4	0	STR													108
1EP 601	16	13	5	STR													322
1EP 801	21	25	4	STR													1420
1EP 802	6	22	4	STR													358
1EP 803	8	13	7	STR													290
																TOTAL WEIGHT =	11813

BAR SCHEDULE

MARK	NUMBER REQ'D	LENGTH FT.	LENGTH IN.	TYPE	A FT.	A IN.	B FT.	B IN.	C FT.	C IN.	D FT.	D IN.	E FT.	E IN.	SER. INCR. FT.	SER. INCR. IN.	WEIGHT (LBS.)
PIER 2 – EPOXY COATED BARS																	
2EP 401	40	9	1	126	2	0	1	5	5	10							243
2EP 402	40	13	6	105	3	0	7	8									361
2EP 403	18	11	2	149	3	9	2	10	1	0							134
2EP 404	10	12	8	STR													85
2EP 405	2	8	5	104	6	6	2	0									11
2EP 406	4	9	3	STR													25
2EP 407	100	14	10	105	1	8	11	8									991
2EP 408	50	17	6	105	8	0	1	8									585
2EP 409	72	11	6	105	2	0	7	8									553
2EP 410	144	12	4	126	2	0	4	8	5	10							1186
2EP 411	144	9	4	105	0	11	7	8									898
2EP 412	4	6	0	STR													16
2EP 413	24	9	0	STR													144
2EP 414	12	10	0	STR													80
2EP 415	96	35	7	STR													2282
2EP 416	66	8	4	STR													367
2EP 417	8	4	0	STR													21
2EP 418	14	10	10	105	4	8	1	8									101
2EP 419	14	13	5	STR													125
2EP 420	14	8	0	STR													75
2EP 421	69	4	10	105	1	8	1	8									223
2EP 422	6	27	0	STR													108
2EP 423	33	9	6	105	4	0	1	8									209
2EP 424	4	10	4	STR													28
2EP 425	21	30	0	STR													421
2EP 426	42	24	6	STR													687
2EP 427	4	16	6	STR													44
2EP 428	4	14	6	STR													39
2EP 429	10	10	6	149	3	9	2	2	1	0	3	9	12				70
2EP 430	2	5	9	105	1	6	2	11									8
2EP 431	2	5	0	105	1	6	2	2									7
2EP 432	40	10	1	126	2	0	2	5	5	10							269
2EP 433	30	6	6	107	3	0	3	0	12		12						130
2EP 434	2	9	5	104	6	6	3	0									13
2EP 501	60	19	5	STR													1215
2EP 502	56	4	0	STR													234
2EP 801	48	35	7	STR													4560
2EP 802	14	32	7	STR													1218
																TOTAL WEIGHT =	17766
PIER 3 – EPOXY COATED BARS																	
3EP 401	224	30	0	STR													4489
3EP 402	112	25	6	STR													1908
3EP 403	332	25	1	STR													5563
3EP 404	36	11	4	104	9	9	1	8									273
3EP 405	48	15	4	105	6	11	1	8									492
3EP 406	4	11	6	STR													31
3EP 407	124	14	10	105	1	8	11	8									1229
3EP 408	4	15	6	STR													41
3EP 409	2	8	9	STR													12
3EP 410	152	22	10	STR													2318
3EP 411	66	9	7	STR													423
3EP 412	12	22	0	STR													176
3EP 413	12	18	0	STR													144
3EP 414	32	15	8	109	4	8	2	11									335
3EP 415	16	3	8	STR													39
3EP 416	4	17	0	STR													45
3EP 417	8	13	0	STR													69
3EP 418	33	9	6	105	4	0	1	8									209
3EP 419	2	4	0	STR													5
3EP 420	30	7	2	109	1	8	1	8									144
3EP 421	32	8	8	109	2	8	1	5									185
3EP 422	4	15	0	STR													40

BAR BENDING DIAGRAMS

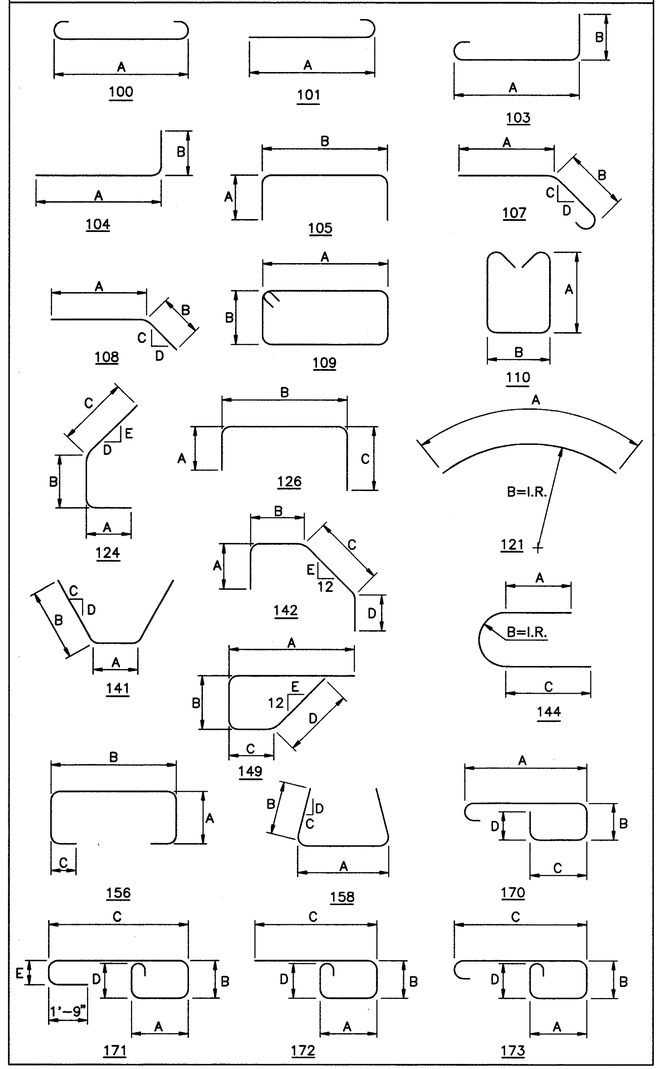

COUNTY BRIDGE NO. 84

REINFORCING STEEL SAMPLES

REFER TO CMS SECTIONS 106.03, 700, 709.00, AND 709.01. SUFFICIENT ADDITIONAL REINFORCING STEEL SHALL BE PROVIDED FOR SAMPLING. RANDOM SAMPLES SHALL BE REPLACED IN THE STRUCTURES BY THE ADDITIONAL STEEL, SPLICED IN ACCORDANCE WITH 509.08

HOWARD NEEDLES TAMMEN & BERGENDOFF
ARCHITECTS ENGINEERS PLANNERS
HNTB

REINFORCEMENT SCHEDULE
WEST ABUTMENT AND PIERS 1 THRU 3
BR. NO. CUY – 6 – 1499
REHABILITATION OF
VETERANS MEMORIAL BRIDGE
(U.S. 6, 20, 42 & S.R. 3 OVER CUYAHOGA RIVER)

CLEVELAND CUYAHOGA COUNTY OHIO

DRAWN B.E.B.	TRACED B.E.B.	CHECKED J.L.V.	REVIEWED C.A.B.	REVISED
DATE 5/21/94	DATE 5/21/94	DATE 5/25/94	DATE 6/01/94	SHEET 244/270

\11646\CONCRETE\RS-PIER.DWG

FHWA REGION	STATE	PROJECT	
5	OHIO		

379 / 412

CUYAHOGA COUNTY
CUY – 6 – 14.99

BAR SCHEDULE

MARK	NUMBER REQ'D	LENGTH FT.	LENGTH IN.	TYPE	A FT.	A IN.	B FT.	B IN.	C FT.	C IN.	D FT.	D IN.	E FT.	E IN.	SER. INCR. FT.	SER. INCR. IN.	WEIGHT (LBS.)
PIER 3 – EPOXY COATED BARS (CONTINUED)																	
3EP 701	48	6	0	STR													589
3EP 801	12	29	0	STR													929
3EP802	24	10	0	STR													641
3EP803	12	12	0	STR													384
3EP804	12	19	0	STR													609
3EP805	12	19	9	STR													633
																TOTAL WEIGHT =	21955
PIER 4 – EPOXY COATED BARS																	
4EP 401	256	30	0	STR													5130
4EP402	128	25	6	STR													2180
4EP403	446	22	7	STR													6728
4EP404	62	11	0	104	9	5	1	8									456
4EP405	27	14	6	105	6	6	1	8									262
4EP406	4	11	2	STR													30
4EP407	108	13	10	105	1	8	10	8									998
4EP408	2	15	6	STR													21
4EP409	2	8	9	STR													12
4EP410	152	20	9	STR													2107
4EP 411	70	9	7	STR													448
4EP412	12	13	0	STR													104
4EP413	24	20	9	STR													333
4EP414	45	15	8	109	4	8	2	11									471
4EP415	8	3	8	STR													20
4EP416	4	16	6	STR													44
4EP417	8	12	6	STR													67
4EP418	20	9	5	STR													126
4EP419	20	18	9	STR													251
4EP420	4	11	4	STR													30
4EP 421	4	12	9	STR													34
4EP422	4	20	4	STR													54
4EP423	4	21	10	STR													58
4EP424	52	15	8	STR													544
4EP425	32	15	9	STR													337
4EP426	12	21	9	121	21	9	6	11									174
4EP427	112	7	2	STR													536
4EP428	44	16	3	STR													478
4EP429	80	8	0	STR													428
4EP430	35	9	6	105	4	0	1	8									222
4EP 431	2	4	0	STR													5
4EP432	30	7	2	109	1	8	1	8									144
4EP433	32	8	8	109	2	8	1	5									185
4EP434	4	15	0	STR													40
4EP 501	124	3	6	STR													453
4EP 601	8	30	0	STR													360
4EP602	4	25	6	STR													153
4EP603	12	16	2	STR													291
4EP 701	48	6	0	STR													589
4EP 801	12	29	0	STR													929
4EP802	24	10	3	STR													657
4EP803	12	12	3	STR													392
4EP804	12	19	0	STR													609
4EP805	12	19	9	STR													633
																TOTAL WEIGHT =	28123
PIER 5 – EPOXY COATED BARS																	
5EP 401	40	9	1	126	2	0	1	5	5	10							243
5EP402	40	13	6	105	3	0	7	8									361
5EP403	8	9	2	149	3	9	1	7	1	0							49
5EP404	10	12	8	STR													85
5EP405	2	8	5	104	6	6	2	0									11
5EP406	12	14	3	STR													114
5EP407	50	8	4	STR													278
5EP408	36	15	8	STR													377
5EP409	12	35	2	STR													282
5EP410	49	4	10	105	1	8	1	8									158
5EP 411	12	10	0	STR													80

BAR SCHEDULE

MARK	NUMBER REQ'D	LENGTH FT.	LENGTH IN.	TYPE	A FT.	A IN.	B FT.	B IN.	C FT.	C IN.	D FT.	D IN.	E FT.	E IN.	SER. INCR. FT.	SER. INCR. IN.	WEIGHT (LBS.)
PIER 5 – EPOXY COATED BARS (CONTINUED)																	
5EP412	12	1	8	STR													13
5EP413	6	7	8	STR													31
5EP414	25	10	10	105	4	8	1	8									181
5EP415	2	6	0	STR													8
5EP416	26	6	6	105	1	0	4	8									113
5EP417	40	2	7	101	2	1											69
5EP418	25	9	6	105	4	0	1	8									159
5EP419	2	14	0	STR													19
5EP420	2	16	6	STR													22
5EP 421	32	9	4	105	0	11	7	8									200
5EP422	1	27	0	STR													18
5EP423	42	24	5	STR													685
5EP424	4	8	0	STR													21
5EP425	4	6	9	STR													18
5EP426	12	9	0	STR													72
5EP427	10	13	10	105	1	8	10	8									92
5EP428	4	12	6	105	5	6	1	8									33
5EP429	2 Ser.	9	6	149	3	9	1	11	1	0	3	0	12				
	of 10	9	1				1	6							0	1/2	124
5EP430	20	8	6	144	3	9	0	3–1/2	3	9							114
5EP 431	2	4	4	105	1	6	1	6									6
5EP432	40	10	1	126	2	0	2	5	5	10							269
5EP433	30	6	6	107	3	0	3	0	12		12						130
5EP434	2	9	5	104	6	6	3	0									13
5EP435	2	4	8	105	1	6	1	10									6
5EP 501	60	19	4	STR													1210
5EP502	6	4	0	STR													25
5EP 801	4	14	3	STR													152
5EP802	6	11	3	STR													180
																TOTAL WEIGHT =	6021
PIER 6 – EPOXY COATED BARS (CONTINUED)																	
6EP 401	20	8	7	126	2	0	0	11	5	10							115
6EP402	10	11	6	105	2	0	7	8									77
6EP403	28	9	0	149	3	9	1	8	1	0	2	9	12				168
6EP404	10	12	8	STR													85
6EP405	4	7	11	104	6	6	1	6									21
6EP406	48	12	6	105	5	6	1	8									401
6EP407	24	33	3	STR													533
6EP408	24	9	0	STR													144
6EP409	44	8	4	STR													245
6EP410	72	8	10	105	3	8	1	8									425
6EP 411	16	9	4	105	0	11	7	8									100
6EP412	4	14	3	STR													38
6EP413	6	7	8	STR													31
6EP414	12	1	8	STR													13
6EP415	4	7	3	STR													19
6EP416	6	5	6	STR													22
6EP417	22	9	6	105	4	0	1	8									140
6EP418	2	25	0	STR													33
6EP419	4	8	0	STR													21
6EP420	24	24	6	STR													393
6EP 421	26	18	0	STR													313
6EP422	4	3	0	STR													8
6EP430	4	4	6	105	1	6	1	8									12
6EP 431	28	6	0	107	3	0	2	6	12		12						112
6EP 501	56	4	2	STR													243
																TOTAL WEIGHT =	3712

BAR BENDING DIAGRAMS

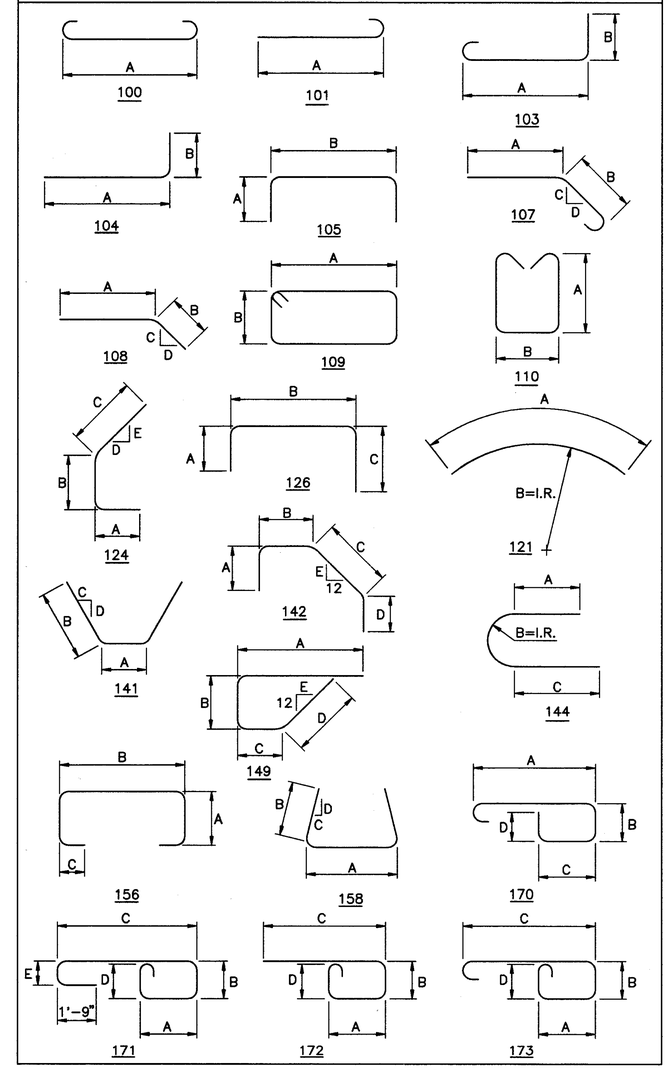

REINFORCING STEEL SAMPLES

REFER TO CMS SECTIONS 106.03, 700, 709.00, AND 709.01. SUFFICIENT ADDITIONAL REINFORCING STEEL SHALL BE PROVIDED FOR SAMPLING. RANDOM SAMPLES SHALL BE REPLACED IN THE STRUCTURES BY THE ADDITIONAL STEEL, SPLICED IN ACCORDANCE WITH 509.08

COUNTY BRIDGE NO. 84

HOWARD NEEDLES TAMMEN & BERGENDOFF
ARCHITECTS ENGINEERS PLANNERS
HNTB

REINFORCEMENT SCHEDULE
PIERS 3, 4, 5 AND 6
BR. NO. CUY – 6 – 1499
REHABILITATION OF
VETERANS MEMORIAL BRIDGE
(U.S. 6, 20, 42 & S.R. 3 OVER CUYAHOGA RIVER)

CLEVELAND CUYAHOGA COUNTY OHIO

DRAWN B.E.B.	TRACED B.E.B	CHECKED J.L.V.	REVIEWED C.A.B.	REVISED
DATE 5/21/94	DATE 5/21/94	DATE 5/25/94	DATE 6/01/94	SHEET 245/270

\11646\CONCRETE\RS-PIER.DWG

FHWA REGION	STATE	PROJECT	
5	OHIO		

380
412

CUYAHOGA COUNTY
CUY – 6 – 14.99

BAR SCHEDULE

MARK	NUMBER REQ'D	LENGTH FT.	LENGTH IN.	TYPE	A FT.	A IN.	B FT.	B IN.	C FT.	C IN.	D FT.	D IN.	E FT.	E IN.	SER. INCR. FT.	SER. INCR. IN.	WEIGHT (LBS.)
PIER 7 – EPOXY COATED BARS																	
7EP 401	20	8	7	126	2	0	0	11	5	10							115
7EP402	10	11	6	105	2	0	7	8									77
7EP403	28	9	0	149	3	9	1	8	1	0	2	9	12				168
7EP404	10	12	8	STR													85
7EP405	4	7	11	104	6	6	1	6									21
7EP406	21	12	6	105	5	6	1	8									175
7EP407	20	30	8	STR													410
7EP408	12	9	0	STR													72
7EP409	22	8	4	STR													122
7EP410	22	8	10	105	3	8	1	8									130
7EP 411	21	8	10	105	3	8	1	8									124
7EP412	12	1	8	STR													13
7EP413	11	9	6	105	4	0	1	8									70
7EP414	2	22	0	STR													29
7EP415	8	21	10	STR													117
7EP416	13	21	0	STR													182
7EP417	2	6	0	STR													8
7EP418	8	7	8	STR													41
7EP430	4	4	6	105	1	6	1	8									12
7EP 431	28	6	0	107	3	0	2	6	12		12						112
7EP 501	56	4	2	STR													243
																TOTAL WEIGHT =	2326
PIER 8 – EPOXY COATED BARS																	
8EP 401	20	8	7	126	2	0	0	11	5	10							115
8EP402	10	11	6	105	2	0	7	8									77
8EP403	28	9	0	149	3	9	1	8	1	0	2	9	12				168
8EP404	10	12	8	STR													85
8EP405	4	7	11	104	6	6	1	6									21
8EP406	25	12	6	105	5	6	1	8									209
8EP407	24	29	3	STR													469
8EP408	24	9	0	STR													144
8EP409	72	8	4	STR													401
8EP410	72	8	10	105	3	8	1	8									425
8EP 411	16	9	11	105	4	7	0	11									106
8EP412	16	14	3	STR													152
8EP413	6	7	8	STR													31
8EP414	12	1	8	STR													13
8EP415	39	18	0	STR													469
8EP416	12	10	0	STR													80
8EP417	4	3	6	STR													9
8EP418	4	4	8	STR													12
8EP419	8	15	9	STR													84
8EP420	10	5	2	105	1	10	1	8									35
8EP 421	76	6	5	105	2	10	0	11									326
8EP422	12	15	5	STR													124
8EP423	1	20	6	STR													14
8EP424	36	9	6	105	4	0	1	8									228
8EP425	4	8	0	STR													21
8EP426	24	24	6	STR													393
8EP427	2	3	0	STR													4
8EP430	4	4	6	105	1	6	1	8									12
8EP 431	28	6	0	107	3	0	2	6	12		12						112
8EP 501	56	4	2	STR													243
																TOTAL WEIGHT =	4582
PIER 9 – EPOXY COATED BARS																	
9EP 401	20	8	7	126	2	0	0	11	5	10							115
9EP402	10	11	6	105	2	0	7	8									77
9EP403	28	9	0	149	3	9	1	8	1	0	2	9	12				168
9EP404	10	12	8	STR													85
9EP405	4	7	11	104	6	6	1	6									21
9EP406	4	6	9	STR													18
9EP407	96	25	8	STR													1646
9EP408	30	12	6	105	5	6	1	8									251
9EP409	72	8	4	STR													401
9EP410	72	4	10	105	1	8	1	8									232
9EP 411	104	9	4	105	0	11	7	8									648
9EP412	24	9	0	STR													144
9EP413	10	7	8	STR													51

BAR SCHEDULE

MARK	NUMBER REQ'D	LENGTH FT.	LENGTH IN.	TYPE	A FT.	A IN.	B FT.	B IN.	C FT.	C IN.	D FT.	D IN.	E FT.	E IN.	SER. INCR. FT.	SER. INCR. IN.	WEIGHT (LBS.)
PIER 9 – EPOXY COATED BARS (CONTINUED)																	
9EP414	12	1	8	STR													13
9EP415	6	17	0	STR													68
9EP416	60	13	10	105	1	8	10	8									554
9EP417	63	24	6	STR													1031
9EP418	12	10	0	STR													80
9EP419	36	9	6	105	4	0	1	8									228
9EP420	4	16	6	STR													44
9EP 421	4	14	0	STR													37
9EP430	4	4	6	105	1	6	1	8									12
9EP 431	28	6	0	107	3	0	2	6	12		12						112
9EP 501	56	4	2	STR													243
																TOTAL WEIGHT =	6279
PIER 10 – EPOXY COATED BARS																	
10EP 401	20	8	6	126	2	0	0	11	5	9							114
10EP402	10	11	3	105	2	0	7	5									75
10EP403	28	9	0	149	3	9	1	8	1	0	2	9	12				168
10EP404	10	12	5	STR													83
10EP405	4	7	9	104	6	4	1	6									21
10EP406	4	6	6	STR													17
10EP407	88	20	2	STR													1185
10EP408	20	11	4	105	4	11	1	8									151
10EP409	78	8	4	STR													434
10EP410	71	4	10	105	1	8	1	8									229
10EP 411	84	9	1	105	0	11	7	5									510
10EP412	24	10	0	STR													160
10EP413	3	4	6	STR													9
10EP414	10	1	8	STR													11
10EP415	6	11	0	STR													44
10EP416	40	12	7	105	1	8	9	5									336
10EP417	63	24	6	STR													1031
10EP418	12	12	0	STR													96
10EP419	39	9	6	105	4	0	1	8									247
10EP420	3	7	5	STR													15
10EP 421	4	16	3	STR													43
10EP422	4	13	9	STR													37
10EP423	4	7	8	STR													20
10EP430	4	4	6	105	1	6	1	8									12
10EP 431	28	6	0	107	3	0	2	6	12		12						112
10EP 501	56	4	2	STR													243
																TOTAL WEIGHT =	5403

BAR BENDING DIAGRAMS

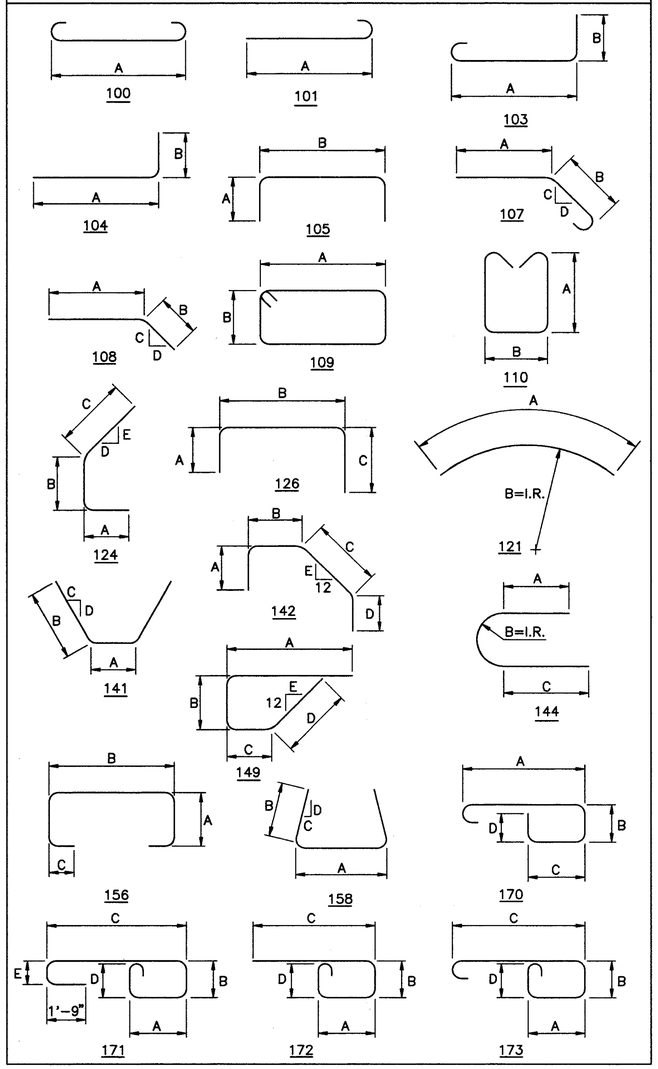

COUNTY BRIDGE NO. 84

REINFORCING STEEL SAMPLES

REFER TO CMS SECTIONS 106.03, 700, 709.00, AND 709.01. SUFFICIENT ADDITIONAL REINFORCING STEEL SHALL BE PROVIDED FOR SAMPLING. RANDOM SAMPLES SHALL BE REPLACED IN THE STRUCTURES BY THE ADDITIONAL STEEL, SPLICED IN ACCORDANCE WITH 509.08

HOWARD NEEDLES TAMMEN & BERGENDOFF
ARCHITECTS ENGINEERS PLANNERS
HNTB

REINFORCEMENT SCHEDULE
PIERS 7, 8, 9 AND 10
BR. NO. CUY – 6 – 1499
REHABILITATION OF
VETERANS MEMORIAL BRIDGE
(U.S. 6, 20, 42 & S.R. 3 OVER CUYAHOGA RIVER)

CLEVELAND CUYAHOGA COUNTY OHIO

DRAWN B.E.B.	TRACED B.E.B	CHECKED J.L.V.	REVIEWED C.A.B.	REVISED
DATE 5/21/94	DATE 5/21/94	DATE 5/25/94	DATE 6/01/94	SHEET 246/270

\11646\CONCRETE\RS-PIER.DWG

FHWA REGION	STATE	PROJECT	
5	OHIO		

381 / 412

CUYAHOGA COUNTY
CUY – 6 – 14.99

BAR SCHEDULE

MARK	NUMBER REQ'D	LENGTH FT.	LENGTH IN.	TYPE	A FT.	A IN.	B FT.	B IN.	C FT.	C IN.	D FT.	D IN.	E FT.	E IN.	SER. INCR. FT.	SER. INCR. IN.	WEIGHT (LBS.)
PIER 11 – EPOXY COATED BARS																	
11EP401	80	5	7	144	2	6	0	2	2	6							298
11EP402	40	28	5	STR													759
11EP403	1 Ser.	9	3	STR													
	of 4	6	3												1	0	21
11EP404	1 Ser.	5	6	STR													
	of 4	3	0												0	10	11
11EP405	2	26	7	STR													36
11EP406	4	21	10	STR													58
11EP407	4	13	2	STR													35
11EP408	1 Ser.	7	0	STR													
	of 6	2	0												1	0	18
11EP409	1 Ser.	8	0	STR													
	of 6	3	0												1	0	22
11EP410	11	4	1	103	1	8	2	0									30
11EP411	11	4	11	103	1	8	2	10									36
11EP412	32	2	10	101	2	4											61
11EP413	68	3	4	101	2	10											151
11EP414	5	23	0	STR													77
11EP415	6	10	1	126	2	0	2	6	5	9							40
11EP416	26	12	7	105	2	8	7	5									219
11EP417	14	10	5	149	3	9	2	9	1	1	3	0	12				97
11EP418	12	12	5	STR													100
11EP419	1	9	4	104	6	4	3	1									6
11EP420	26	9	6	126	2	0	1	11	5	9							165
11EP421	14	9	2	149	3	9	1	7	1	0	3	0	12				86
11EP422	20	9	2	126	2	0	1	7	5	9							122
11EP423	8	20	0	STR													107
11EP424	2	6	10	STR													9
11EP425	1	8	2	126	1	6	3	4	3	6							5
11EP426	1	7	7	126	1	6	2	9	3	6							5
11EP427	2	4	4	105	1	6	1	6									6
11EP428	2	8	9	104	6	4	2	6									12
11EP429	1	8	6	104	6	4	2	3									6
11EP430	32	6	6	107	3	0	3	0	12		12						139
11EP431	80	4	0	105	1	6	1	2									214
11EP432	2	8	0	126	1	6	2	6	4	2							11
11EP601	20	17	11	STR													538
11EP602	88	13	6	STR													1784
11EP603	8	11	5	STR													137
11EP604	17	9	4	105	4	3	1	2									238
11EP605	2 Ser.	11	10	105	5	6	1	2									
	of 7	5	10		2	6									1	0	186
11EP606	2 Ser.	19	2	105	9	2	1	2									
	of 10	6	10		3	0									14–1/2		391
11EP607	1	6	10	105	3	0	1	2									
11EP801	8	29	9	100	28	5											635
11EP802	16	26	7	STR													1136
11EP803	4	13	3	STR													142
11EP804	8	21	10	STR													466
11EP805	2	28	5	STR													152
11EP806	22	20	0	STR													1175
11EP807	8	13	3	STR													283
															TOTAL WEIGHT =		10225
PIER 12 – EPOXY COATED BARS																	
12EP401	84	5	8	144	2	4	0	3½	2	4							318
12EP402	84	5	0	105	1	9	1	8									281
12EP403	4	28	2	STR													75
12EP404	46	8	4	STR													256
12EP405	12	22	10	STR													183
12EP406	2 Ser.	6	3	STR													
	of 5	2	3												1	0	28
12EP407	2 Ser.	5	3	STR													
	of 5	1	3												1	0	22
12EP408	2 Ser.	17	6	105	8	0	1	8									
	of 10	5	6		2	0									1	4	154
12EP409	2	23	6	STR													31
12EP410	2	21	6	STR													29
12EP411	10	4	3	103	1	8	2	2									28
12EP412	11	3	8	103	1	8	1	7									27

BAR SCHEDULE

MARK	NUMBER REQ'D	LENGTH FT.	LENGTH IN.	TYPE	A FT.	A IN.	B FT.	B IN.	C FT.	C IN.	D FT.	D IN.	E FT.	E IN.	SER. INCR. FT.	SER. INCR. IN.	WEIGHT (LBS.)
PIER 12 – EPOXY COATED BARS (CONTINUED)																	
12EP413	2	28	6	STR													38
12EP414	52	10	1	126	2	0	2	6	5	9							350
12EP415	20	11	0	105	2	0	7	2									147
12EP416	14	9	8	149	3	9	2	2	0	11	3	0	12				90
12EP417	6	12	2	STR													49
12EP418	2	9	4	104	6	3	3	2									12
12EP419	2	9	6	104	6	5	3	2									13
12EP420	6	12	5	STR													50
12EP421	14	10	11	149	3	9	3	4	1	0	3	0	12				102
12EP422	6	11	3	105	2	0	7	5									45
12EP423	32	6	6	107	3	0	3	0	12		12						139
12EP424	2	6	3	105	1	6	3	5									8
12EP425	2	5	0	105	1	6	2	2									7
12EP426	2	6	7	STR													9
12EP427	2	6	2	105	1	6	3	4									8
12EP801	4	29	5	101	28	6											314
12EP802	8	30	0	STR													641
12EP803	8	22	10	STR													488
12EP804	8	14	0	STR													299
12EP805	4	30	3	100	28	5											323
12EP806	25	19	6	STR													1302
12EP807	25	5	6	STR													367
															TOTAL WEIGHT =		6233
EAST ABUTMENT – EPOXY COATED BARS																	
EEA401	50	9	11	126	2	0	2	6	5	7							331
EEA402	25	11	0	105	2	0	7	2									184
EEA403	14	9	9	149	3	9	2	3	0	11	3	0	12				91
EEA404	10	12	2	STR													81
EEA405	4	9	4	104	6	3	3	2									25
EEA406	14	10	9	149	3	9	3	3	0	11	3	0	12				101
EEA430	4	5	2	105	1	6	2	4									14
EEA431	28	6	6	107	3	0	3	0	12		12						122
EEA501	30	19	9	STR													618
EEA502	30	4	2	STR													130
															TOTAL WEIGHT =		1697

BAR BENDING DIAGRAMS

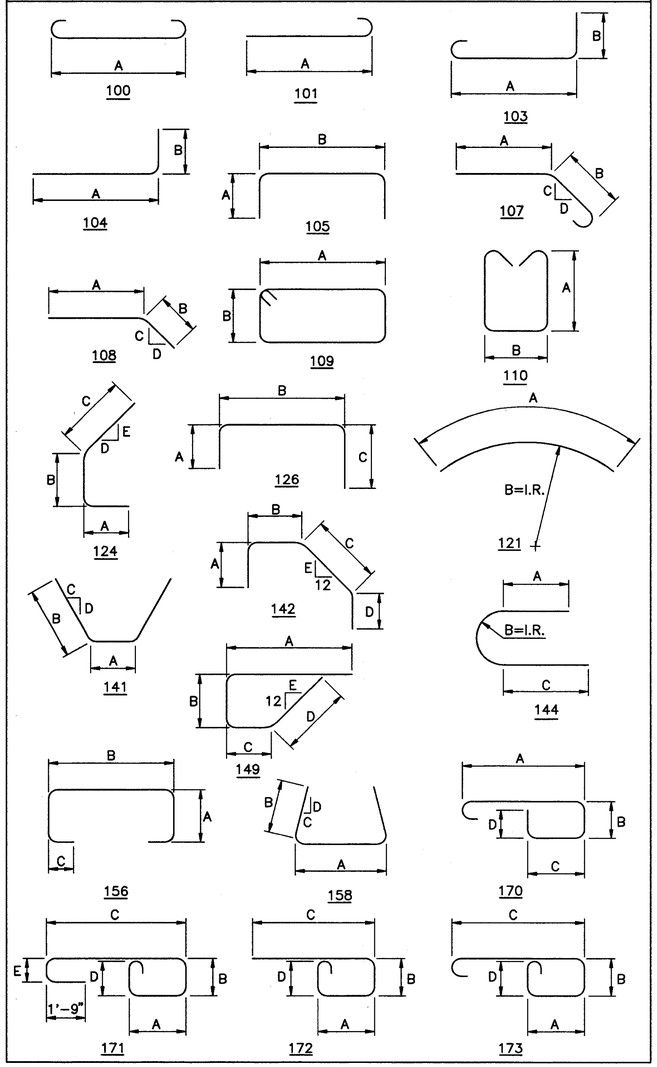

COUNTY BRIDGE NO. 84

REINFORCING STEEL SAMPLES

REFER TO CMS SECTIONS 106.03, 700, 709.00, AND 709.01. SUFFICIENT ADDITIONAL REINFORCING STEEL SHALL BE PROVIDED FOR SAMPLING. RANDOM SAMPLES SHALL BE REPLACED IN THE STRUCTURES BY THE ADDITIONAL STEEL, SPLICED IN ACCORDANCE WITH 509.08

HOWARD NEEDLES TAMMEN & BERGENDOFF
ARCHITECTS ENGINEERS PLANNERS
HNTB

REINFORCEMENT SCHEDULE
PIERS 11, 12 AND EAST ABUTMENT
BR. NO. CUY – 6 – 1499
REHABILITATION OF
VETERANS MEMORIAL BRIDGE
(U.S. 6, 20, 42 & S.R. 3 OVER CUYAHOGA RIVER)

CLEVELAND CUYAHOGA COUNTY OHIO

DRAWN B.E.B.	TRACED B.E.B.	CHECKED J.L.V.	REVIEWED C.A.B.	REVISED
DATE 5/21/94	DATE 5/21/94	DATE 5/25/94	DATE 6/01/94	SHEET 247/270

\11646\CONCRETE\RS-PIER.DWG

FHWA REGION	STATE	PROJECT	
5	OHIO		

382
412

CUYAHOGA COUNTY
CUY – 6 – 14.99

BAR SCHEDULE

MARK	NUMBER REQ'D	LENGTH FT.	LENGTH IN.	TYPE	A FT.	A IN.	B FT.	B IN.	C FT.	C IN.	D FT.	D IN.	E FT.	E IN.	SER. INCR. FT.	SER. INCR. IN.	WEIGHT (LBS.)
SPAN 1A – COLUMNS – EPOXY COATED BARS																	
1AEC 401	39	5	0	109	1	4	0	11									130
1AEC704	18	12	9	STR													469
																TOTAL WEIGHT =	599
SPAN 1B – COLUMNS – EPOXY COATED BARS																	
1BEC 401	39	5	0	109	1	4	0	11									130
1BEC402	28	5	10	109	1	4	1	4									109
1BEC 701	18	16	0	STR													589
1BEC702	16	17	0	STR													556
																TOTAL WEIGHT =	1384
SPAN 1 – COLUMNS – EPOXY COATED BARS																	
1EC 401	122	5	0	109	1	4	0	11									407
1EC402	56	5	10	109	1	4	1	4									218
1EC403	48	3	6	STR													112
1EC404	18	5	8	STR													68
1EC405	34	9	6	109	2	10	1	8									216
1EC 601	8	20	0	STR													240
1EC 701	24	16	0	STR													785
1EC702	47	17	0	STR													1633
1EC703	15	13	9	STR													422
																TOTAL WEIGHT =	4101
SPAN 2 – COLUMNS – EPOXY COATED BARS																	
2EC 401	177	5	0	109	1	4	0	11									591
2EC402	56	5	10	109	1	4	1	4									218
2EC403	40	3	6	STR													94
2EC404	36	5	8	STR													136
2EC405	114	9	6	109	2	10	1	8									723
2EC 601	16	29	3	STR													703
2EC602	16	30	0	STR													721
2EC 701	30	16	0	STR													981
2EC702	38	17	0	STR													1320
2EC703	42	13	9	STR													1180
																TOTAL WEIGHT =	6667
SPAN 3 – COLUMNS – EPOXY COATED BARS																	
3EC 401	350	5	0	109	1	4	0	11									1169
3EC402	28	5	10	109	1	4	1	4									109
3EC403	56	3	6	STR													131
3EC404	78	5	8	STR													295
3EC405	70	9	6	109	2	10	1	8									444
3EC 601	16	37	4	STR													897
3EC 701	30	16	0	STR													981
3EC702	40	17	6	STR													1431
3EC703	60	14	0	STR													1717
3EC704	12	13	6	STR													331
3EC705	12	18	0	STR													442
3EC706	12	8	6	STR													208
																TOTAL WEIGHT =	8155
PIER 3 – COLUMNS – EPOXY COATED BARS																	
3PEC 401	90	5	0	109	1	4	0	11									301
3PEC 701	36	17	9	STR													1306
																TOTAL WEIGHT =	1607
PIER 4 – COLUMNS – EPOXY COATED BARS																	
4PEC 401	90	5	0	109	1	4	0	11									301
4PEC 701	36	17	9	STR													1306
																TOTAL WEIGHT =	1607

BAR SCHEDULE

MARK	NUMBER REQ'D	LENGTH FT.	LENGTH IN.	TYPE	A FT.	A IN.	B FT.	B IN.	C FT.	C IN.	D FT.	D IN.	E FT.	E IN.	SER. INCR. FT.	SER. INCR. IN.	WEIGHT (LBS.)
SPAN 5 – COLUMNS – EPOXY COATED BARS																	
5EC 401	171	5	0	109	1	4	0	11									571
5EC402	28	5	10	109	1	4	1	4									109
5EC403	32	3	6	STR													75
5EC404	12	5	8	STR													45
5EC 701	18	16	0	STR													589
5EC702	34	17	0	STR													1181
5EC703	12	13	9	STR													337
5EC704	12	13	0	STR													319
5EC705	12	18	0	STR													442
																TOTAL WEIGHT =	3668
SPAN 6 – COLUMNS – EPOXY COATED BARS																	
6EC 401	136	5	0	109	1	4	0	11									454
6EC402	56	5	10	109	1	4	1	4									218
6EC403	24	3	6	STR													56
6EC404	18	5	8	STR													68
6EC 701	24	16	0	STR													785
6EC702	35	17	0	STR													1216
6EC703	33	13	9	STR													927
																TOTAL WEIGHT =	3724
SPAN 7 – COLUMNS – EPOXY COATED BARS																	
7EC 401	199	5	0	109	1	4	0	11									665
7EC402	56	5	10	109	1	4	1	4									218
7EC403	24	3	6	STR													56
7EC404	36	5	8	STR													136
7EC 701	24	16	0	STR													785
7EC702	35	17	0	STR													1216
7EC703	51	13	9	STR													1433
7EC704	6	12	9	STR													156
7EC706	6	8	0	STR													98
																TOTAL WEIGHT =	4763
SPAN 8 – COLUMNS – EPOXY COATED BARS																	
8EC 401	79	5	0	109	1	4	0	11									264
8EC402	56	5	10	109	1	4	1	4									218
8EC403	28	3	6	STR													65
8EC 701	24	16	0	STR													785
8EC702	32	17	0	STR													1112
8EC703	6	13	9	STR													169
8EC704	6	12	9	STR													156
																TOTAL WEIGHT =	2769
SPAN 9 – COLUMNS – EPOXY COATED BARS																	
9EC 401	108	5	0	109	1	4	0	11									361
9EC402	56	5	10	109	1	4	1	4									218
9EC403	24	3	6	STR													56
9EC404	8	5	8	STR													30
9EC 701	24	16	0	STR													785
9EC702	32	17	0	STR													1112
9EC703	6	13	9	STR													169
9EC704	12	12	9	STR													313
9EC706	12	8	0	STR													196
																TOTAL WEIGHT =	3240
SPAN 10 – COLUMNS – EPOXY COATED BARS																	
10EC 401	161	5	0	109	1	4	0	11									538
10EC402	56	5	10	109	1	4	1	4									218
10EC403	32	3	6	STR													75
10EC404	12	5	8	STR													45
10EC 701	24	16	0	STR													785
10EC702	32	17	0	STR													1112
10EC703	30	13	9	STR													843
10EC704	18	12	9	STR													469
																TOTAL WEIGHT =	4085

BAR BENDING DIAGRAMS

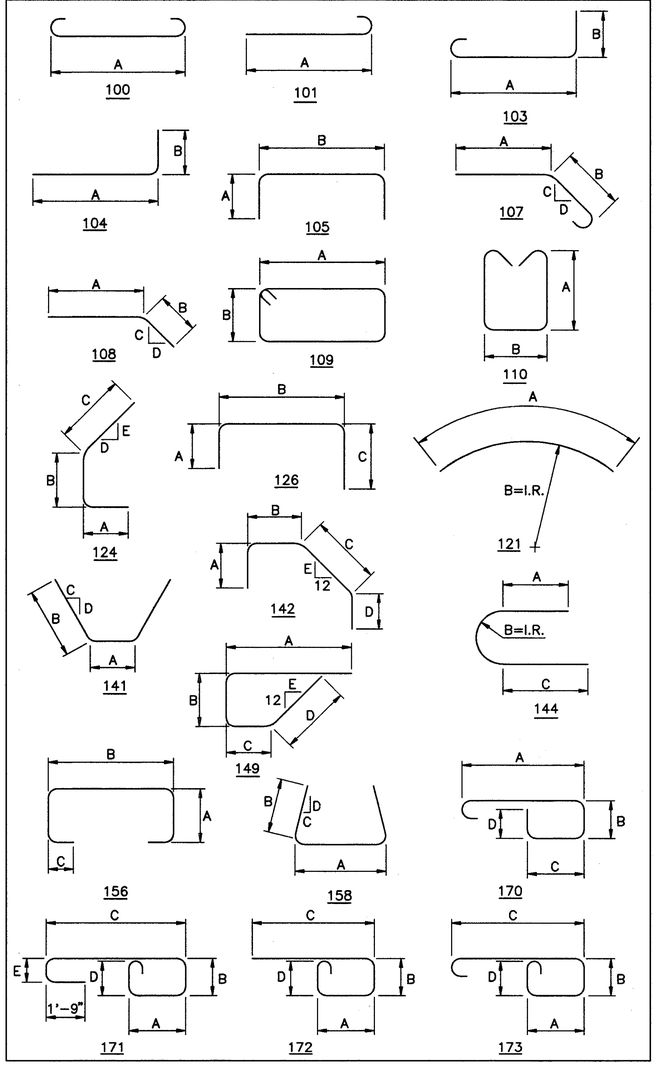

REINFORCING STEEL SAMPLES

REFER TO CMS SECTIONS 106.03, 700, 709.00, AND 709.01. SUFFICIENT ADDITIONAL REINFORCING STEEL SHALL BE PROVIDED FOR SAMPLING. RANDOM SAMPLES SHALL BE REPLACED IN THE STRUCTURES BY THE ADDITIONAL STEEL, SPLICED IN ACCORDANCE WITH 509.08

COUNTY BRIDGE NO. 84

HOWARD NEEDLES TAMMEN & BERGENDOFF
ARCHITECTS ENGINEERS PLANNERS
HNTB

REINFORCEMENT SCHEDULE
COLUMNS
BR. NO. CUY – 6 – 1499
REHABILITATION OF
VETERANS MEMORIAL BRIDGE
(U.S. 6, 20, 42 & S.R. 3 OVER CUYAHOGA RIVER)

CLEVELAND CUYAHOGA COUNTY OHIO

DRAWN J.L.V.	TRACED J.L.V.	CHECKED B.E.B.	REVIEWED C.A.B.	REVISED
DATE 5/27/94	DATE 5/27/94	DATE 5/31/94	DATE 6/01/94	SHEET 248/270

\11646\CONCRETE\RSCJA1.DWG

FHWA REGION	STATE	PROJECT	
5	OHIO		

383/412

CUYAHOGA COUNTY
CUY – 6 – 14.99

BAR SCHEDULE

MARK	NUMBER REQ'D	LENGTH FT.	LENGTH IN.	TYPE	A FT.	A IN.	B FT.	B IN.	C FT.	C IN.	D FT.	D IN.	E FT.	E IN.	SER. INCR. FT.	SER. INCR. IN.	WEIGHT (LBS.)
SPAN 11 – COLUMNS – EPOXY COATED BARS																	
11EC 401	110	5	0	109	1	4	0	11									367
11EC402	28	5	10	109	1	4	1	4									109
11EC403	12	3	6	STR													28
11EC404	36	5	8	STR													136
11EC 701	12	16	0	STR													392
11EC702	22	17	0	STR													764
11EC703	30	13	9	STR													843
TOTAL WEIGHT =																	2639
SPAN 12 – COLUMNS – EPOXY COATED BARS																	
12EC 401	149	5	0	109	1	4	0	11									498
12EC402	344	4	5	110	1	4	1	2									1015
12EC403	24	2	2	STR													35
12EC404	24	7	0	STR													112
12EC405	24	9	4	STR													150
12EC406	24	9	10	STR													158
12EC407	24	7	10	STR													126
12EC408	24	3	9	STR													60
12EC409	6	5	8	STR													23
12EC 601	24	4	0	STR													144
12EC 701	12	16	0	STR													392
12EC702	18	17	0	STR													625
12EC703	18	13	9	STR													506
12EC704	18	12	9	STR													469
TOTAL WEIGHT =																	4313
SPAN 13 – COLUMNS – EPOXY COATED BARS																	
13EC 401	135	5	0	109	1	4	0	11									451
13EC402	28	5	10	109	1	4	1	4									109
13EC 701	24	16	5	STR													805
13EC702	37	17	0	STR													1286
13EC703	9	13	9	STR													253
13EC704	6	12	9	STR													156
TOTAL WEIGHT =																	3060
EAST SIDE STATION – COLUMNS – EPOXY COATED BARS																	
ESEC 401	99	5	0	109	1	4	0	11									331
ESEC402	28	5	10	109	1	4	1	4									109
ESEC 701	12	16	6	STR													405
ESEC702	16	17	6	STR													572
ESEC703	8	13	9	STR													225
ESEC704	8	16	9	STR													274
ESEC705	15	17	9	STR													544
ESEC706	3	14	6	STR													89
TOTAL WEIGHT =																	2549

BAR SCHEDULE

MARK	NUMBER REQ'D	LENGTH FT.	LENGTH IN.	TYPE	A FT.	A IN.	B FT.	B IN.	C FT.	C IN.	D FT.	D IN.	E FT.	E IN.	SER. INCR. FT.	SER. INCR. IN.	WEIGHT (LBS.)
SPAN 1 – LOWER DECK JACK ARCHES – EPOXY COATED BARS																	
1LEJ 401	128	4	4	STR													371
1LEJ402	64	8	6	109	3	1	0	11									363
1LEJ403	64	7	0	109	2	4	0	11									299
1LEJ404	64	6	4	109	2	0	0	11									271
1LEJ405	64	7	10	STR													335
1LEJ 601	96	7	10	STR													1130
TOTAL WEIGHT =																	2769
SPAN 2 – LOWER DECK JACK ARCHES – EPOXY COATED BARS																	
2LEJ 401	108	4	6	STR													325
2LEJ402	54	8	4	109	3	0	0	11									301
2LEJ403	54	7	0	109	2	4	0	11									253
2LEJ404	54	6	4	109	2	0	0	11									228
2LEJ405	54	8	2	STR													295
2LEJ 601	81	8	2	STR													994
TOTAL WEIGHT =																	2396
SPAN 3 – LOWER DECK JACK ARCHES – EPOXY COATED BARS																	
3LEJ 401	152	4	6	STR													457
3LEJ402	76	8	4	109	3	0	0	11									423
3LEJ403	76	7	0	109	2	4	0	11									355
3LEJ404	76	6	4	109	2	0	0	11									322
3LEJ405	76	8	2	STR													415
3LEJ 601	114	8	2	STR													1398
TOTAL WEIGHT =																	3370
SPAN 5 – LOWER DECK JACK ARCHES – EPOXY COATED BARS																	
5LEJ 401	84	4	6	STR													253
5LEJ402	42	8	4	109	3	0	0	11									234
5LEJ403	42	7	0	109	2	4	0	11									196
5LEJ404	42	6	4	109	2	0	0	11									178
5LEJ405	42	8	2	STR													229
5LEJ 601	63	8	2	STR													773
TOTAL WEIGHT =																	1863
SPAN 6 – LOWER DECK JACK ARCHES – EPOXY COATED BARS																	
6LEJ 401	48	4	6	STR													144
6LEJ402	24	8	4	109	3	0	0	11									134
6LEJ403	24	7	0	109	2	4	0	11									112
6LEJ404	24	6	4	109	2	0	0	11									102
6LEJ405	24	8	2	STR													131
6LEJ 601	36	8	2	STR													442
TOTAL WEIGHT =																	1065
SPAN 7 – LOWER DECK JACK ARCHES – EPOXY COATED BARS																	
7LEJ 401	44	4	6	STR													132
7LEJ402	22	8	4	109	3	0	0	11									122
7LEJ403	22	7	0	109	2	4	0	11									103
7LEJ404	22	6	4	109	2	0	0	11									93
7LEJ405	22	8	2	STR													120
7LEJ 601	33	8	2	STR													405
TOTAL WEIGHT =																	975
SPAN 8 – LOWER DECK JACK ARCHES – EPOXY COATED BARS																	
8LEJ 401	48	4	6	STR													144
8LEJ402	24	8	4	109	3	0	0	11									134
8LEJ403	24	7	0	109	2	4	0	11									112
8LEJ404	24	6	4	109	2	0	0	11									102
8LEJ405	24	8	2	STR													131
8LEJ 601	36	8	2	STR													442
TOTAL WEIGHT =																	1065

BAR BENDING DIAGRAMS

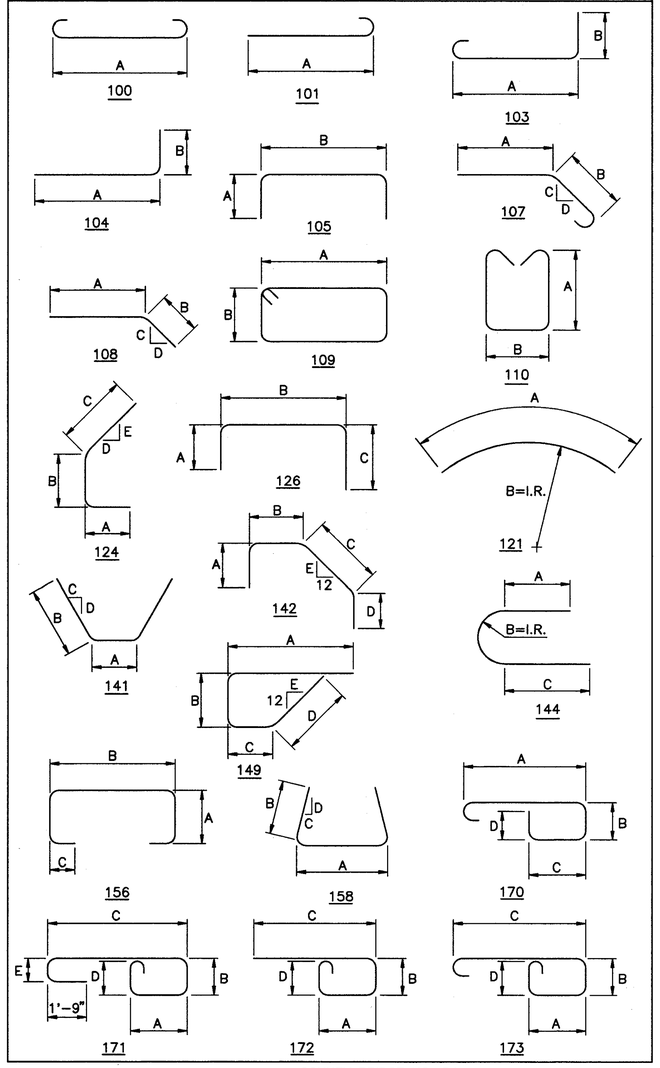

REINFORCING STEEL SAMPLES

REFER TO CMS SECTIONS 106.03, 700, 709.00, AND 709.01. SUFFICIENT ADDITIONAL REINFORCING STEEL SHALL BE PROVIDED FOR SAMPLING. RANDOM SAMPLES SHALL BE REPLACED IN THE STRUCTURES BY THE ADDITIONAL STEEL, SPLICED IN ACCORDANCE WITH 509.08

COUNTY BRIDGE NO. 84

HOWARD NEEDLES TAMMEN & BERGENDOFF
ARCHITECTS ENGINEERS PLANNERS
HNTB

REINFORCEMENT SCHEDULE
COLUMNS AND JACK ARCHES
BR. NO. CUY – 6 – 1499
REHABILITATION OF
VETERANS MEMORIAL BRIDGE
(U.S. 6, 20, 42 & S.R. 3 OVER CUYAHOGA RIVER)

CLEVELAND CUYAHOGA COUNTY OHIO

DRAWN J.L.V.	TRACED J.L.V.	CHECKED B.E.B.	REVIEWED C.A.B.	REVISED
DATE 5/27/94	DATE 5/27/94	DATE 5/31/94	DATE 6/01/94	SHEET 249/270

\11646\CONCRETE\RSCJA1.DWG

FHWA REGION	STATE	PROJECT	
5	OHIO		

384/412

CUYAHOGA COUNTY
CUY – 6 – 14.99

BAR SCHEDULE

MARK	NUMBER REQ'D	LENGTH FT.	LENGTH IN.	TYPE	A FT.	A IN.	B FT.	B IN.	C FT.	C IN.	D FT.	D IN.	E FT.	E IN.	SER. INCR. FT.	SER. INCR. IN.	WEIGHT (LBS.)
SPAN 9 – LOWER DECK JACK ARCHES – EPOXY COATED BARS																	
9LEJ 401	56	4	4	STR													162
9LEJ402	28	8	6	109	3	1	0	11									159
9LEJ403	28	7	0	109	2	4	0	11									131
9LEJ404	28	6	4	109	2	0	0	11									118
9LEJ405	28	7	10	STR													147
9LEJ 601	42	7	10	STR													494
																TOTAL WEIGHT =	1211
SPAN 10 – LOWER DECK JACK ARCHES – EPOXY COATED BARS																	
10LEJ 401	32	4	4	STR													93
10LEJ402	16	8	6	109	3	1	0	11									91
10LEJ403	16	7	0	109	2	4	0	11									75
10LEJ404	16	6	4	109	2	0	0	11									68
10LEJ405	16	7	10	STR													84
10LEJ 601	24	7	10	STR													282
																TOTAL WEIGHT =	693
SPAN 11 – LOWER DECK JACK ARCHES – EPOXY COATED BARS																	
11LEJ 401	28	4	4	STR													81
11LEJ402	14	8	6	109	3	1	0	11									79
11LEJ403	14	7	0	109	2	4	0	11									65
11LEJ404	14	6	4	109	2	0	0	11									59
11LEJ405	14	7	10	STR													73
11LEJ 601	21	7	10	STR													247
																TOTAL WEIGHT =	604
SPAN 1A – UPPER DECK JACK ARCHES – EPOXY COATED BARS																	
1AUEJ404	4	7	4	109	2	6	0	11									20
1AUEJ405	4	8	0	109	2	10	0	11									21
1AUEJ406	4	10	2	109	3	11	0	11									27
1AUEJ407	4	8	2	STR													22
1AUEJ 601	6	8	2	STR													74
1AUEJ602	8	4	8	STR													56
																TOTAL WEIGHT =	220
SPAN 1B – UPPER DECK JACK ARCHES – EPOXY COATED BARS																	
1BUEJ 401	24	6	6	109	2	1	0	11									104
1BUEJ402	24	7	2	109	2	5	0	11									115
1BUEJ403	24	9	4	109	3	6	0	11									150
1BUEJ404	22	6	10	109	2	3	0	11									100
1BUEJ405	22	7	6	109	2	7	0	11									110
1BUEJ406	22	9	8	109	3	8	0	11									142
1BUEJ407	46	8	2	STR													251
1BUEJ 601	69	8	2	STR													846
1BUEJ602	92	4	8	STR													645
																TOTAL WEIGHT =	2463
SPAN 1 – UPPER DECK JACK ARCHES – EPOXY COATED BARS																	
1UEJ 401	38	6	6	109	2	1	0	11									165
1UEJ402	38	7	2	109	2	5	0	11									182
1UEJ403	38	9	4	109	3	6	0	11									237
1UEJ404	30	5	10	109	1	9	0	11									117
1UEJ405	30	6	6	109	2	1	0	11									130
1UEJ406	30	8	8	109	3	2	0	11									174
1UEJ407	68	8	2	STR													371
1UEJ 601	102	8	2	STR													1251
1UEJ602	136	4	8	STR													953
																TOTAL WEIGHT =	3580
SPAN 2 – UPPER DECK JACK ARCHES – EPOXY COATED BARS																	
2UEJ 401	26	6	8	109	2	2	0	11									116
2UEJ402	26	7	4	109	2	6	0	11									127
2UEJ403	26	9	2	109	3	5	0	11									159
2UEJ404	22	5	10	109	1	9	0	11									86
2UEJ405	22	6	6	109	2	1	0	11									96
2UEJ406	22	8	4	109	3	0	0	11									122

BAR SCHEDULE

MARK	NUMBER REQ'D	LENGTH FT.	LENGTH IN.	TYPE	A FT.	A IN.	B FT.	B IN.	C FT.	C IN.	D FT.	D IN.	E FT.	E IN.	SER. INCR. FT.	SER. INCR. IN.	WEIGHT (LBS.)
SPAN 2 – UPPER DECK JACK ARCHES – EPOXY COATED BARS (CONTINUED)																	
2UEJ407	48	8	6	STR													273
2UEJ 601	72	8	6	STR													919
2UEJ602	96	4	10	STR													697
																TOTAL WEIGHT =	2595
SPAN 3 – UPPER DECK JACK ARCHES – EPOXY COATED BARS																	
3UEJ 401	38	6	10	109	2	3	0	11									173
3UEJ402	38	7	6	109	2	7	0	11									190
3UEJ403	38	9	4	109	3	6	0	11									237
3UEJ404	22	6	0	109	1	10	0	11									88
3UEJ405	22	6	8	109	2	2	0	11									98
3UEJ406	22	8	6	109	3	1	0	11									125
3UEJ407	60	8	6	STR													341
3UEJ 601	90	8	6	STR													1149
3UEJ602	120	4	10	STR													871
																TOTAL WEIGHT =	3272
PIER 3 – UPPER DECK JACK ARCHES – EPOXY COATED BARS																	
P3UEJ450	8 Ser.	13	4	109	5	6	0	11									
	of 4	8	6		3	1									1	7 5/16	233
P3UEJ 451	8	13	0	STR													69
P3UEJ452	8	12	2	121	12	2	5	9									65
P3UEJ650	8	14	3	101	13	7											171
P3UEJ 651	16	8	0	STR													192
																TOTAL WEIGHT =	730
PIER 4 – UPPER DECK JACK ARCHES – EPOXY COATED BARS																	
P4UEJ450	8 Ser.	13	2	109	5	5	0	11									
	of 4	8	4		3	0									1	7 5/16	230
P4UEJ 451	8	13	0	STR													69
P4UEJ452	8	12	2	121	12	2	5	9									65
P4UEJ650	8	14	3	101	13	7											171
P4UEJ 651	16	8	0	STR													192
																TOTAL WEIGHT =	727
SPAN 5 – UPPER DECK JACK ARCHES – EPOXY COATED BARS																	
5UEJ 401	34	6	6	109	2	1	0	11									148
5UEJ402	34	7	2	109	2	5	0	11									163
5UEJ403	34	9	0	109	3	4	0	11									204
5UEJ404	18	5	8	109	1	8	0	11									68
5UEJ405	18	6	4	109	2	0	0	11									76
5UEJ406	18	8	2	109	2	11	0	11									98
5UEJ407	52	8	6	STR													295
5UEJ 601	78	8	6	STR													996
5UEJ602	104	4	10	STR													755
																TOTAL WEIGHT =	2803
SPAN 6 – UPPER DECK JACK ARCHES – EPOXY COATED BARS																	
6UEJ 401	34	6	6	109	2	1	0	11									148
6UEJ402	34	7	2	109	2	5	0	11									163
6UEJ403	34	9	0	109	3	4	0	11									204
6UEJ404	16	5	8	109	1	8	0	11									61
6UEJ405	16	6	4	109	2	0	0	11									68
6UEJ406	16	8	2	109	2	11	0	11									87
6UEJ407	50	8	6	STR													284
6UEJ 601	75	8	6	STR													958
6UEJ602	100	4	10	STR													726
																TOTAL WEIGHT =	2699
SPAN 7 – UPPER DECK JACK ARCHES – EPOXY COATED BARS																	
7UEJ 401	48	6	6	109	2	1	0	11									208
7UEJ402	48	7	2	109	2	5	0	11									230
7UEJ403	48	9	0	109	3	4	0	11									289
7UEJ404	18	5	8	109	1	8	0	11									68
7UEJ405	18	6	4	109	2	0	0	11									76
7UEJ406	18	8	2	109	2	11	0	11									98

BAR BENDING DIAGRAMS

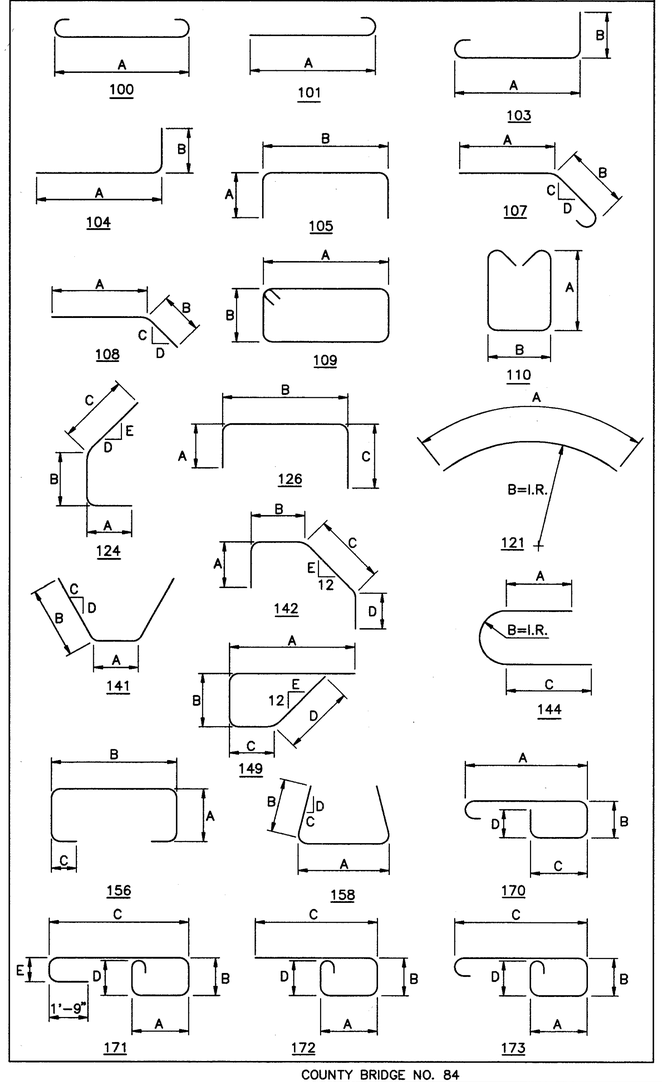

REINFORCING STEEL SAMPLES

REFER TO CMS SECTIONS 106.03, 700, 709.00, AND 709.01. SUFFICIENT ADDITIONAL REINFORCING STEEL SHALL BE PROVIDED FOR SAMPLING. RANDOM SAMPLES SHALL BE REPLACED IN THE STRUCTURES BY THE ADDITIONAL STEEL, SPLICED IN ACCORDANCE WITH 509.08

COUNTY BRIDGE NO. 84

HOWARD NEEDLES TAMMEN & BERGENDOFF
ARCHITECTS ENGINEERS PLANNERS
HNTB

REINFORCEMENT SCHEDULE
JACK ARCHES
BR. NO. CUY – 6 – 1499
REHABILITATION OF
VETERANS MEMORIAL BRIDGE
(U.S. 6, 20, 42 & S.R. 3 OVER CUYAHOGA RIVER)
CLEVELAND CUYAHOGA COUNTY OHIO

DRAWN	TRACED	CHECKED	REVIEWED	REVISED
J.L.V.	J.L.V.	B.E.B.	C.A.B.	
DATE 5/27/94	DATE 5/27/94	DATE 5/31/94	DATE 6/01/94	SHEET 250/270

\11646\CONCRETE\RSCJA1.DWG

FHWA REGION	STATE	PROJECT	
5	OHIO		

385/412

CUYAHOGA COUNTY
CUY – 6 – 14.99

BAR SCHEDULE

MARK	NUMBER REQ'D	LENGTH FT.	LENGTH IN.	TYPE	A FT.	A IN.	B FT.	B IN.	C FT.	C IN.	D FT.	D IN.	E FT.	E IN.	SER. INCR. FT.	SER. INCR. IN.	WEIGHT (LBS.)
SPAN 7 – UPPER DECK JACK ARCHES – EPOXY COATED BARS (CONTINUED)																	
7UEJ407	66	8	6	STR													375
7UEJ 601	99	8	6	STR													1264
7UEJ602	132	4	10	STR													958
																TOTAL WEIGHT =	3566
SPAN 8 – UPPER DECK JACK ARCHES – EPOXY COATED BARS																	
8UEJ 401	12	6	6	109	2	1	0	11									52
8UEJ402	12	7	2	109	2	5	0	11									57
8UEJ403	12	9	0	109	3	4	0	11									72
8UEJ404	10	5	8	109	1	8	0	11									38
8UEJ405	10	6	4	109	2	0	0	11									42
8UEJ406	10	8	2	109	2	11	0	11									55
8UEJ407	22	8	6	STR													125
8UEJ 601	33	8	6	STR													421
8UEJ602	44	4	10	STR													319
																TOTAL WEIGHT =	1181
SPAN 9 – UPPER DECK JACK ARCHES – EPOXY COATED BARS																	
9UEJ 401	36	6	6	109	2	1	0	11									156
9UEJ402	36	7	2	109	2	5	0	11									172
9UEJ403	36	9	4	109	3	6	0	11									224
9UEJ404	10	5	8	109	1	8	0	11									38
9UEJ405	10	6	4	109	2	0	0	11									42
9UEJ406	10	8	6	109	3	1	0	11									57
9UEJ407	46	8	2	STR													251
9UEJ 601	69	8	2	STR													846
9UEJ602	92	4	8	STR													645
																TOTAL WEIGHT =	2431
SPAN 10 – UPPER DECK JACK ARCHES – EPOXY COATED BARS																	
10UEJ 401	36	6	6	109	2	1	0	11									156
10UEJ402	36	7	2	109	2	5	0	11									172
10UEJ403	36	9	4	109	3	6	0	11									224
10UEJ404	8	5	8	109	1	8	0	11									30
10UEJ405	8	6	4	109	2	0	0	11									34
10UEJ406	8	8	6	109	3	1	0	11									45
10UEJ407	44	8	2	STR													240
10UEJ 601	66	8	2	STR													810
10UEJ602	88	4	8	STR													617
																TOTAL WEIGHT =	2328
SPAN 11 – UPPER DECK JACK ARCHES – EPOXY COATED BARS																	
11UEJ 401	20	6	6	109	2	1	0	11									87
11UEJ402	20	7	2	109	2	5	0	11									96
11UEJ403	20	9	4	109	3	6	0	11									125
11UEJ404	6	5	8	109	1	8	0	11									23
11UEJ405	6	6	4	109	2	0	0	11									25
11UEJ406	6	8	6	109	3	1	0	11									34
11UEJ407	26	8	2	STR													142
11UEJ 601	39	8	2	STR													478
11UEJ602	52	4	8	STR													364
																TOTAL WEIGHT =	1374
SPAN 12 – UPPER DECK JACK ARCHES – EPOXY COATED BARS																	
12UEJ 401	10	6	4	109	2	0	0	11									42
12UEJ402	10	7	0	109	2	4	0	11									47
12UEJ403	10	9	0	109	3	4	0	11									60
12UEJ404	6	5	6	109	1	7	0	11									22
12UEJ405	6	6	2	109	1	11	0	11									25
12UEJ406	6	8	2	109	2	11	0	11									33
12UEJ407	16	8	5	STR													90
12UEJ 601	24	8	5	STR													303
12UEJ602	32	4	7	STR													220
																TOTAL WEIGHT =	842

BAR SCHEDULE

MARK	NUMBER REQ'D	LENGTH FT.	LENGTH IN.	TYPE	A FT.	A IN.	B FT.	B IN.	C FT.	C IN.	D FT.	D IN.	E FT.	E IN.	SER. INCR. FT.	SER. INCR. IN.	WEIGHT (LBS.)
SPAN 13 – UPPER DECK JACK ARCHES – EPOXY COATED BARS																	
13UEJ 401	20	6	6	109	2	1	0	11									87
13UEJ402	20	7	2	109	2	5	0	11									96
13UEJ403	20	9	4	109	3	6	0	11									125
13UEJ404	10	6	10	109	2	3	0	11									46
13UEJ405	10	7	6	109	2	7	0	11									50
13UEJ406	10	9	6	109	3	7	0	11									63
13UEJ407	30	8	2	STR													164
13UEJ 601	45	8	2	STR													552
13UEJ602	60	4	8	STR													421
																TOTAL WEIGHT =	1604
EAST SIDE STATION – UPPER DECK JACK ARCHES – EPOXY COATED BARS																	
ESUEJ 401	68	6	4	109	2	0	0	11									288
ESUEJ402	68	7	0	109	2	4	0	11									318
ESUEJ403	68	9	2	109	3	5	0	11									416
ESUEJ404	22	5	4	109	1	6	0	11									78
ESUEJ405	22	6	0	109	1	10	0	11									88
ESUEJ406	22	8	2	109	2	11	0	11									120
ESUEJ407	90	8	2	STR													491
ESUEJ408	24	4	6	109	1	3	0	9									72
ESUEJ 601	139	8	2	STR													1705
ESUEJ602	180	4	8	STR													1262
																TOTAL WEIGHT =	4838

BAR BENDING DIAGRAMS

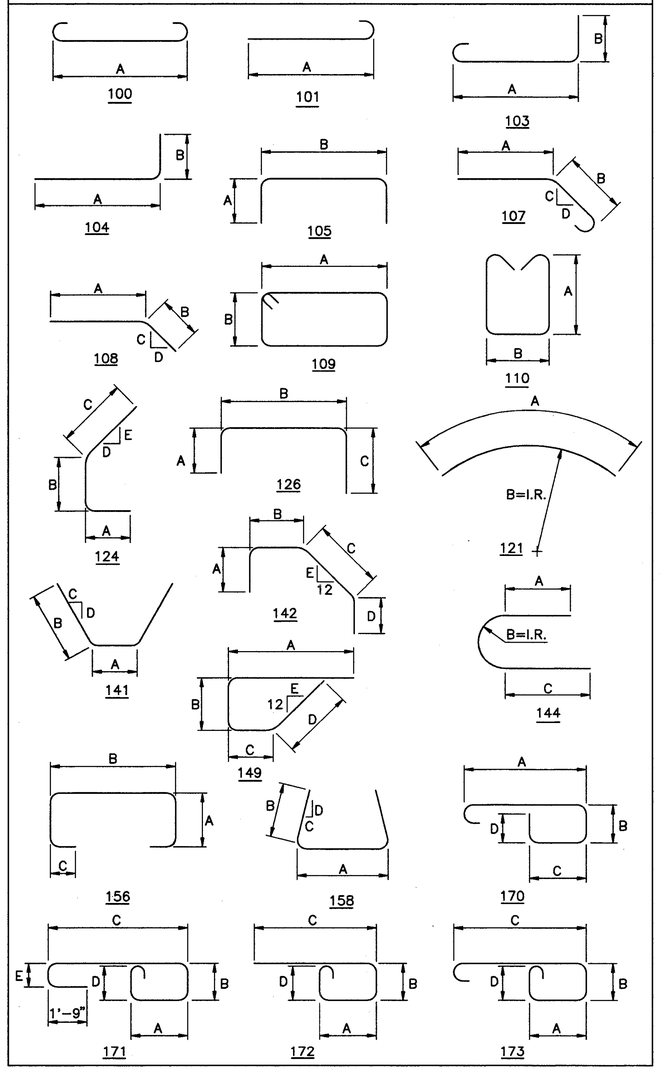

COUNTY BRIDGE NO. 84

REINFORCING STEEL SAMPLES

REFER TO CMS SECTIONS 106.03, 700, 709.00, AND 709.01. SUFFICIENT ADDITIONAL REINFORCING STEEL SHALL BE PROVIDED FOR SAMPLING. RANDOM SAMPLES SHALL BE REPLACED IN THE STRUCTURES BY THE ADDITIONAL STEEL, SPLICED IN ACCORDANCE WITH 509.08

HOWARD NEEDLES TAMMEN & BERGENDOFF
ARCHITECTS ENGINEERS PLANNERS
HNTB

REINFORCEMENT SCHEDULE
JACK ARCHES
BR. NO. CUY – 6 – 1499
REHABILITATION OF
VETERANS MEMORIAL BRIDGE
(U.S. 6, 20, 42 & S.R. 3 OVER CUYAHOGA RIVER)
CLEVELAND CUYAHOGA COUNTY OHIO

DRAWN J.L.V.	TRACED J.L.V.	CHECKED B.E.B.	REVIEWED C.A.B.	REVISED
DATE 5/27/94	DATE 5/27/94	DATE 5/31/94	DATE 6/01/94	SHEET 251/270

\11646\CONCRETE\RSCJA1.DWG

FHWA REGION	STATE	PROJECT	
5	OHIO		

386/412

CUYAHOGA COUNTY
CUY – 6 – 14.99

BAR SCHEDULE

MARK	NUMBER REQ'D	LENGTH FT.	LENGTH IN.	TYPE	A FT.	A IN.	B FT.	B IN.	C FT.	C IN.	D FT.	D IN.	E FT.	E IN.	SER. INCR. FT.	SER. INCR. IN.	WEIGHT (LBS.)
SPAN 1 – LOWER DECK FLOORBEAMS – EPOXY COATED BARS																	
1LEB 401	24	22	8	STR													363
1LEB402	8	25	7	STR													137
1LEB403	8	24	7	STR													131
1LEB404	8	12	2	109	4	2	1	8									65
1LEB405	2	15	2	109	5	8	1	8									20
1LEB 501	28	7	0	110	1	4	3	8									204
1LEB502	28	6	5	110	1	4	3	1									187
1LEB503	117	13	3	109	4	8	1	8									1617
1LEB 701	36	22	8	STR													1668
1LEB702	15	25	8	STR													787
1LEB703	22	13	10	144	0	0	0	6–1/2	12	0							622
1LEB704	12	24	5	STR													599
1LEB705	12	23	6	STR													576
1LEB706	5	24	6	STR													250
1LEB707	5	26	6	STR													271
1LEB708	6	20	0	STR													245
1LEB 801	12	10	8	108	5	0	5	8	12		12						342
1LEB803	6	10	3	STR													164
																TOTAL WEIGHT =	8248
SPAN 2 – LOWER DECK FLOORBEAMS – EPOXY COATED BARS																	
2LEB 401	16	22	8	STR													242
2LEB404	2	12	2	109	4	2	1	8									16
2LEB 501	36	7	0	110	1	4	3	8									263
2LEB502	36	6	5	110	1	4	3	1									241
2LEB503	46	13	3	109	4	8	1	8									636
2LEB 701	24	22	8	STR													1112
2LEB702	10	25	8	STR													525
2LEB703	12	13	10	144	0	0	0	6–1/2	12	0							339
2LEB 801	12	10	8	108	5	0	5	8	12		12						342
																TOTAL WEIGHT =	3716
SPAN 3 – LOWER DECK FLOORBEAMS – EPOXY COATED BARS																	
3LEB 401	8	22	8	STR													121
3LEB402	16	27	6	STR													294
3LEB403	32	24	7	STR													525
3LEB404	10	12	2	109	4	2	1	8									81
3LEB405	8	15	2	109	5	8	1	8									81
3LEB 501	38	6	9	110	1	4	3	5									268
3LEB502	38	6	4	110	1	4	3	0									251
3LEB503	163	13	3	109	4	8	1	8									2253
3LEB504	38	5	3	110	1	4	1	11									208
3LEB 701	12	22	8	STR													556
3LEB702	5	26	8	STR													273
3LEB703	6	13	10	144	0	0	0	6–1/2	12	0							170
3LEB 801	12	10	0	123	5	0	2	0	1	10							320
3LEB802	12	11	3	123	5	0	2	9	1	11							360
3LEB803	28	10	3	STR													766
3LEB 901	16	16	1	144	0	0	0	6–1/2	14	3							875
3LEB902	20	20	0	STR													1360
3LEB903	12	37	6	STR													1530
3LEB904	12	45	3	STR													1846
3LEB905	16	23	5	STR													1274
3LEB906	8	25	3	STR													687
																TOTAL WEIGHT =	14099
SPAN 5 – LOWER DECK FLOORBEAMS – EPOXY COATED BARS																	
5LEB 401	8	22	8	STR													121
5LEB402	8	27	6	STR													147
5LEB403	16	24	7	STR													263
5LEB404	6	12	2	109	4	2	1	8									49
5LEB405	4	15	2	109	5	8	1	8									41

BAR SCHEDULE

MARK	NUMBER REQ'D	LENGTH FT.	LENGTH IN.	TYPE	A FT.	A IN.	B FT.	B IN.	C FT.	C IN.	D FT.	D IN.	E FT.	E IN.	SER. INCR. FT.	SER. INCR. IN.	WEIGHT (LBS.)
SPAN 5 – LOWER DECK FLOORBEAMS – EPOXY COATED BARS (CONTINUED)																	
5LEB 501	18	6	9	110	1	4	3	5									127
5LEB502	18	6	4	110	1	4	3	0									119
5LEB503	93	13	3	109	4	8	1	8									1285
5LEB504	18	5	3	110	1	4	1	11									99
5LEB 701	12	22	8	STR													556
5LEB702	5	26	8	STR													273
5LEB703	6	13	10	144	0	0	0	6–1/2	12	0							170
5LEB 801	6	10	0	123	5	0	2	0	1	10							160
5LEB802	6	11	3	123	5	0	2	9	1	11							180
5LEB803	12	10	3	STR													328
5LEB 901	8	16	1	144	0	0	0	6–1/2	14	3							437
5LEB902	10	20	0	STR													680
5LEB903	6	37	6	STR													765
5LEB904	6	45	3	STR													923
5LEB905	8	23	5	STR													637
5LEB906	4	25	3	STR													343
																TOTAL WEIGHT =	7703
SPAN 6 – LOWER DECK FLOORBEAMS – EPOXY COATED BARS																	
6LEB 501	10	7	0	110	1	4	3	8									73
6LEB502	10	6	5	110	1	4	3	1									67
																TOTAL WEIGHT =	140
SPAN 7 – LOWER DECK FLOORBEAMS – EPOXY COATED BARS																	
7LEB 501	8	7	0	110	1	4	3	8									58
7LEB502	8	6	5	110	1	4	3	1									54
																TOTAL WEIGHT =	112
SPAN 8 – LOWER DECK FLOORBEAMS – EPOXY COATED BARS																	
8LEB 501	8	7	0	110	1	4	3	8									58
8LEB502	8	6	5	110	1	4	3	1									54
																TOTAL WEIGHT =	112
SPAN 10 – LOWER DECK FLOORBEAMS – EPOXY COATED BARS																	
10LEB 501	2	7	0	110	1	4	3	8									15
10LEB502	2	6	5	110	1	4	3	1									13
																TOTAL WEIGHT =	28
SPAN 11 – LOWER DECK FLOORBEAMS – EPOXY COATED BARS																	
11LEB 401	8	7	8	STR													41
11LEB 501	6	6	11	110	1	4	3	7									43
11LEB502	16	8	8	110	1	8	4	8									145
																TOTAL WEIGHT =	229
SPAN 13 – LOWER DECK FLOORBEAMS – EPOXY COATED BARS																	
13LEB 401	40	24	10	STR													664
13LEB402	8	7	10	STR													42
13LEB 501	130	14	5	109	4	8	2	3									1955
13LEB502	18	9	10	110	2	3	4	8									185
13LEB 801	106	24	10	STR													7028
13LEB802	24	23	3	STR													1490
																TOTAL WEIGHT =	11364

BAR BENDING DIAGRAMS

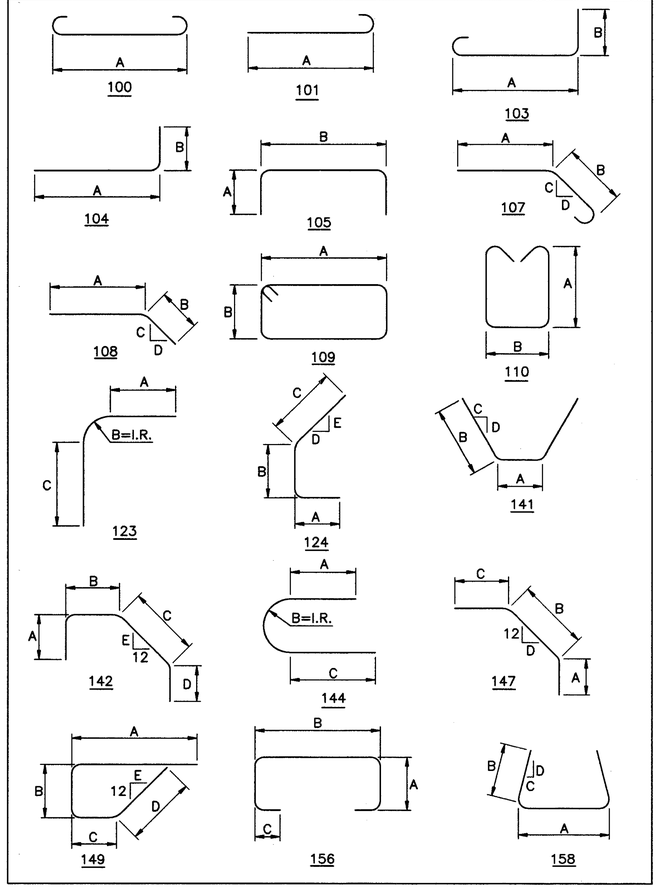

MECHANICAL SPLICE NOTE

AT LOCATIONS WHERE MECHANICAL SPLICES ARE REQUIRED, THE BAR DIMENSIONS ARE DETAILED TO THE CENTER OF THE SPLICE. IF ADDITIONAL BAR LENGTH IS REQUIRED FOR THE TYPE OF MECHANICAL SPLICE USED, THE CONTRACTOR SHALL ADJUST THE BAR DIMENSIONS ACCORDINGLY. PAYMENT SHALL BE BASED ON THE PLAN DIMENSIONS.

REINFORCING STEEL SAMPLES

REFER TO CMS SECTIONS 106.03, 700, 709.00, AND 709.01. SUFFICIENT ADDITIONAL REINFORCING STEEL SHALL BE PROVIDED FOR SAMPLING. RANDOM SAMPLES SHALL BE REPLACED IN THE STRUCTURES BY THE ADDITIONAL STEEL, SPLICED IN ACCORDANCE WITH 509.08

COUNTY BRIDGE NO. 84

HOWARD NEEDLES TAMMEN & BERGENDOFF
ARCHITECTS ENGINEERS PLANNERS
HNTB

REINFORCEMENT SCHEDULE
LOWER DECK FLOORBEAMS
BR. NO. CUY – 6 – 1499
REHABILITATION OF
VETERANS MEMORIAL BRIDGE
(U.S. 6, 20, 42 & S.R. 3 OVER CUYAHOGA RIVER)

CLEVELAND CUYAHOGA COUNTY OHIO

DRAWN J.L.V.	TRACED J.L.V.	CHECKED B.E.B.	REVIEWED C.A.B.	REVISED
DATE 5/27/94	DATE 5/27/94	DATE 5/31/94	DATE 6/01/94	SHEET 252/270

\11646\CONCRETE\RSFBMS1.DWG

FHWA REGION	STATE	PROJECT	
5	OHIO		

387/412

CUYAHOGA COUNTY
CUY – 6 – 14.99

BAR SCHEDULE

MARK	NUMBER REQ'D	LENGTH FT.	LENGTH IN.	TYPE	A FT.	A IN.	B FT.	B IN.	C FT.	C IN.	D FT.	D IN.	E FT.	E IN.	SER. INCR. FT.	SER. INCR. IN.	WEIGHT (LBS.)
SPAN 1A – UPPER DECK FLOORBEAMS – EPOXY COATED BARS																	
1AUEB 401	8	13	4	STR													71
1AUEB402	8	13	5	STR													72
1AUEB403	8	13	6	STR													72
1AUEB404	8	13	7	STR													73
1AUEB405	8	13	8	STR													73
1AUEB406	8	13	9	STR													73
1AUEB407	8	13	10	STR													74
1AUEB 501	28	5	0	STR													146
1AUEB 601	2	3	9	STR													11
1AUEB602	2	4	3	STR													13
1AUEB603	5	13	4	STR													100
1AUEB604	5	13	5	STR													101
1AUEB605	5	13	6	STR													101
1AUEB606	5	13	7	STR													102
1AUEB607	5	13	8	STR													103
1AUEB608	5	13	9	STR													103
1AUEB609	5	13	10	STR													104
1AUEB610	70	8	10	110	1	5	3	4									929
1AUEB 611	70	9	0	110	1	5	3	5									946
1AUEB612	70	9	2	110	1	5	3	6									964
1AUEB 901	4	13	4	STR													181
1AUEB902	4	13	5	STR													182
1AUEB903	4	13	6	STR													184
1AUEB904	4	13	7	STR													185
1AUEB905	4	13	8	STR													186
1AUEB906	4	13	9	STR													187
1AUEB907	4	13	10	STR													188
																TOTAL WEIGHT =	5524
SPAN 1B – UPPER DECK FLOORBEAMS – EPOXY COATED BARS																	
1BUEB 401	12	25	7	STR													205
1BUEB402	6	30	0	STR													120
1BUEB403	10	5	7	105	2	3	1	3									37
1BUEB404	24	5	0	109	0	11	1	4									80
1BUEB405	4	5	10	109	1	4	1	4									16
1BUEB406	32	22	3	STR													476
1BUEB407	32	20	9	STR													444
1BUEB408	16	20	0	STR													214
1BUEB409	16	19	3	STR													206
1BUEB410	16	18	6	STR													198
1BUEB 411	16	17	9	STR													190
1BUEB412	16	17	0	STR													182
1BUEB413	16	15	6	STR													166
1BUEB414	4	4	6	STR													12
1BUEB415	16	3	0	STR													32
1BUEB416	4	17	10	STR													48
1BUEB417	4	16	11	STR													45
1BUEB418	4	14	10	STR													40
1BUEB419	4	14	7	STR													39
1BUEB420	4	13	4	STR													36
1BUEB 421	4	11	11	STR													32
1BUEB422	4	10	5	STR													28
1BUEB423	4	8	11	STR													24
1BUEB424	4	7	5	STR													20
1BUEB425	4	4	5	STR													12
1BUEB 501	52	5	0	STR													271
1BUEB502	22	9	9	109	3	3	1	4									224
1BUEB503	10	9	11	109	3	4	1	4									103
1BUEB504	20	10	1	109	3	5	1	4									210
1BUEB505	22	10	3	109	3	6	1	4									235
1BUEB506	20	10	7	109	3	8	1	4									221
1BUEB507	10	10	9	109	3	9	1	4									112
1BUEB508	160	10	3	109	3	6	1	4									1711
1BUEB509	40	10	1	109	3	5	1	4									421
1BUEB510	40	9	11	109	3	4	1	4									414
1BUEB 511	40	9	9	109	3	3	1	4									407
1BUEB512	60	11	1	109	3	11	1	4									694

BAR SCHEDULE

MARK	NUMBER REQ'D	LENGTH FT.	LENGTH IN.	TYPE	A FT.	A IN.	B FT.	B IN.	C FT.	C IN.	D FT.	D IN.	E FT.	E IN.	SER. INCR. FT.	SER. INCR. IN.	WEIGHT (LBS.)
SPAN 1B – UPPER DECK FLOORBEAMS – EPOXY COATED BARS (CONTINUED)																	
1BUEB513	2 Ser.	12	9	109	4	9	1	4									
	of 8	7	9	109	2	3	1	4							0	8-1/2	171
1BUEB514	3 Ser.	12	9	109	4	9	1	4									
	of 7	7	9	109	2	3	1	4							0	10	225
1BUEB515	2 Ser.	12	9	109	4	9	1	4									
	of 5	7	7	109	2	2	1	4							1	3-1/2	106
1BUEB516	2 Ser.	12	9	109	4	9	1	4									
	of 5	7	5	109	2	1	1	4							1	4	105
1BUEB517	1 Ser.	12	9	109	4	9	1	4									
	of 3	7	5	109	2	1	1	4							2	8	32
1BUEB 601	54	3	9	STR													304
1BUEB602	54	4	3	STR													345
1BUEB603	4	13	11	147	2	0	7	11	4	0	34						84
1BUEB604	4	12	5	147	2	0	7	11	2	6	34						75
1BUEB605	2	11	5	147	2	0	7	3	2	2	31						34
1BUEB606	2	10	7	147	2	0	6	5	2	2	27-1/8						32
1BUEB607	2	9	9	147	2	0	5	8	2	1	23-3/16						29
1BUEB608	2	8	11	147	2	0	4	11	2	0	19-5/6						27
1BUEB609	2	8	2	147	2	0	4	2	2	0	15-5/16						25
1BUEB610	2	7	0	147	2	0	3	0	2	0	7-1/2						21
1BUEB 1001	6	30	0	STR													775
1BUEB1002	12	24	9	101	23	4											1278
1BUEB1003	8	18	0	104	15	4	3	0									620
1BUEB1004	8	20	0	STR													688
1BUEB1005	4	15	9	STR													271
1BUEB1006	8	24	0	STR													826
1BUEB1007	12	23	0	STR													1188
1BUEB1010	16	34	0	100	31	2											2341
1BUEB 1011	16	32	9	100	29	11											2255
1BUEB1012	8	32	2	100	29	4											1107
1BUEB1013	8	31	7	100	28	9											1087
1BUEB1014	8	30	11	100	28	1											1064
1BUEB1015	8	30	4	100	27	6											1044
1BUEB1016	8	29	9	100	26	11											1024
1BUEB1017	8	28	6	100	25	8											981
1BUEB1018	4	20	9	101	19	4											357
1BUEB1019	4	19	6	101	18	1											336
1BUEB1020	2	18	11	101	17	6											163
1BUEB 1021	2	18	4	101	16	11											158
1BUEB1022	2	17	8	101	16	3											152
1BUEB1023	2	17	1	101	15	8											147
1BUEB1024	2	16	5	101	15	0											141
1BUEB1025	2	15	3	101	13	10											131
1BUEB1026	10	24	4	101	22	11											1047
1BUEB1027	10	22	7	101	21	2											972
1BUEB1028	5	21	8	101	20	3											466
1BUEB1029	5	20	10	101	19	5											448
1BUEB1030	5	19	11	101	18	6											429
1BUEB 1031	5	19	1	101	17	8											411
1BUEB1032	5	18	3	101	16	10											393
1BUEB1033	5	16	4	101	14	11											351
																TOTAL WEIGHT =	32,191
SPAN 1 – UPPER DECK FLOORBEAMS – EPOXY COATED BARS																	
1UEB 401	144	25	7	STR													2461
1UEB402	12	30	0	STR													240
1UEB403	110	5	7	105	2	3	1	3									410
1UEB404	38	5	0	109	0	11	1	4									127
1UEB405	8	5	10	109	1	4	1	4									31
1UEB 501	84	5	0	STR													438
1UEB502	44	9	9	109	3	3	1	4									447
1UEB503	20	9	11	109	3	4	1	4									207
1UEB504	40	10	1	109	3	5	1	4									421
1UEB505	44	10	3	109	3	6	1	4									470
1UEB506	40	10	7	109	3	8	1	4									442
1UEB507	20	10	9	109	3	9	1	4									224
1UEB508	180	10	3	109	3	6	1	4									1924
1UEB509	60	10	1	109	3	5	1	4									631
1UEB510	60	9	11	109	3	4	1	4									621

BAR BENDING DIAGRAMS

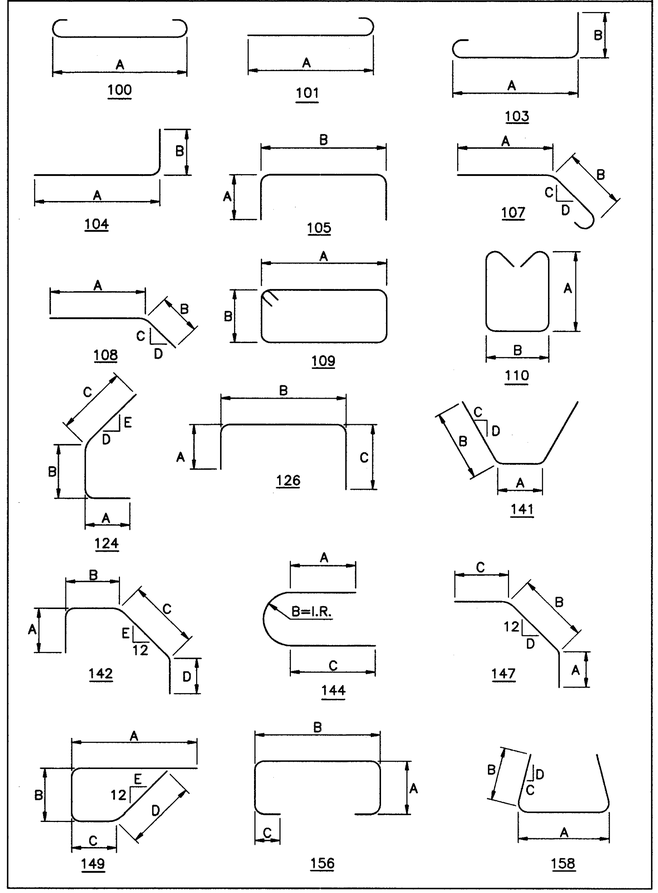

MECHANICAL SPLICE NOTE

AT LOCATIONS WHERE MECHANICAL SPLICES ARE REQUIRED, THE BAR DIMENSIONS ARE DETAILED TO THE CENTER OF THE SPLICE. IF ADDITIONAL BAR LENGTH IS REQUIRED FOR THE TYPE OF MECHANICAL SPLICE USED, THE CONTRACTOR SHALL ADJUST THE BAR DIMENSIONS ACCORDINGLY. PAYMENT SHALL BE BASED ON THE PLAN DIMENSIONS.

REINFORCING STEEL SAMPLES

REFER TO CMS SECTIONS 106.03, 700, 709.00, AND 709.01. SUFFICIENT ADDITIONAL REINFORCING STEEL SHALL BE PROVIDED FOR SAMPLING. RANDOM SAMPLES SHALL BE REPLACED IN THE STRUCTURES BY THE ADDITIONAL STEEL, SPLICED IN ACCORDANCE WITH 509.08

COUNTY BRIDGE NO. 84

HOWARD NEEDLES TAMMEN & BERGENDOFF
ARCHITECTS ENGINEERS PLANNERS
HNTB

REINFORCEMENT SCHEDULE
UPPER DECK FLOORBEAMS
BR. NO. CUY – 6 – 1499
REHABILITATION OF
VETERANS MEMORIAL BRIDGE
(U.S. 6, 20, 42 & S.R. 3 OVER CUYAHOGA RIVER)

CLEVELAND CUYAHOGA COUNTY OHIO

DRAWN J.L.V.	TRACED J.L.V.	CHECKED B.E.B.	REVIEWED C.A.B.	REVISED
DATE 5/27/94	DATE 5/27/94	DATE 5/31/94	DATE 6/01/94	SHEET 253/270

\11646\CONCRETE\RSFBMS1.DWG

FHWA REGION	STATE	PROJECT	
5	OHIO		

388/412

CUYAHOGA COUNTY
CUY – 6 – 14.99

BAR SCHEDULE

MARK	NUMBER REQ'D	LENGTH FT.	LENGTH IN.	TYPE	A FT.	A IN.	B FT.	B IN.	C FT.	C IN.	D FT.	D IN.	E FT.	E IN.	SER. INCR. FT.	SER. INCR. IN.	WEIGHT (LBS.)
SPAN 1 – UPPER DECK FLOORBEAMS – EPOXY COATED BARS (CONTINUED)																	
1UEB 511	90	9	9	109	3	3	1	4									915
1UEB 601	118	3	9	STR													665
1UEB602	118	4	3	STR													753
1UEB 1001	12	30	0	STR													1549
1UEB1002	24	24	9	101	23	4											2556
1UEB1003	16	18	0	104	15	4	3	0									1239
1UEB1004	16	20	0	STR													1377
1UEB1005	8	15	9	STR													542
1UEB1006	16	24	0	STR													1652
1UEB1007	24	23	0	STR													2375
1UEB1008	30	26	0	STR													3356
1UEB1009	30	21	9	STR													2808
1UEB1010	45	28	5	100	25	7											5502
																TOTAL WEIGHT =	34,383
SPAN 2 – UPPER DECK FLOORBEAMS – EPOXY COATED BARS																	
2UEB 401	80	25	7	STR													1367
2UEB402	12	30	0	STR													240
2UEB403	62	5	7	105	2	3	1	3									231
2UEB404	22	5	0	109	0	11	1	4									73
2UEB405	8	5	10	109	1	4	1	4									31
2UEB 501	52	5	0	STR													271
2UEB502	44	9	9	109	3	3	1	4									447
2UEB503	20	9	11	109	3	4	1	4									207
2UEB504	40	10	1	109	3	5	1	4									421
2UEB505	44	10	3	109	3	6	1	4									470
2UEB506	40	10	7	109	3	8	1	4									442
2UEB507	20	10	9	109	3	9	1	4									224
2UEB508	84	10	5	109	3	7	1	4									913
2UEB509	28	10	3	109	3	6	1	4									299
2UEB510	28	10	1	109	3	5	1	4									294
2UEB 511	42	9	11	109	3	4	1	4									434
2UEB 601	52	3	9	STR													293
2UEB602	52	4	3	STR													332
2UEB 1001	12	30	0	STR													1549
2UEB1002	24	24	9	101	23	4											2556
2UEB1003	16	18	0	104	15	4	3	0									1239
2UEB1004	16	20	0	STR													1377
2UEB1005	8	15	9	STR													542
2UEB1006	16	24	0	STR													1652
2UEB1007	24	23	0	STR													2375
2UEB1008	14	26	0	STR													1566
2UEB1009	14	21	9	STR													1310
2UEB1010	21	28	5	100	25	7											2568
																TOTAL WEIGHT =	23,723
SPAN 3 – UPPER DECK FLOORBEAMS – EPOXY COATED BARS																	
3UEB 401	88	26	7	STR													1563
3UEB402	16	30	0	STR													321
3UEB403	10	5	7	105	2	3	1	3									37
3UEB404	22	5	0	109	0	11	1	4									73
3UEB405	4	5	10	109	1	4	1	4									16
3UEB 501	52	5	0	STR													271
3UEB502	22	9	11	109	3	4	1	4									228
3UEB503	12	10	1	109	3	5	1	4									126
3UEB504	20	10	3	109	3	6	1	4									214
3UEB505	22	10	5	109	3	7	1	4									239
3UEB506	20	10	7	109	3	8	1	4									221
3UEB507	10	10	11	109	3	10	1	4									114
3UEB508	4	8	11	109	2	10	1	4									37
3UEB509	2	10	1	109	3	5	1	4									21
3UEB510	2	10	7	109	3	8	1	4									22
3UEB 511	2	10	11	109	3	10	1	4									23
3UEB512	2	8	3	109	2	6	1	4									17
3UEB513	2	11	1	109	3	11	1	4									23
3UEB514	2	11	3	109	4	0	1	4									23

BAR SCHEDULE

MARK	NUMBER REQ'D	LENGTH FT.	LENGTH IN.	TYPE	A FT.	A IN.	B FT.	B IN.	C FT.	C IN.	D FT.	D IN.	E FT.	E IN.	SER. INCR. FT.	SER. INCR. IN.	WEIGHT (LBS.)
SPAN 3 – UPPER DECK FLOORBEAMS – EPOXY COATED BARS (CONTINUED)																	
3UEB515	2	9	1	109	2	11	1	4									19
3UEB516	2 Ser.	7	7	109	2	2	1	4									
	of 3	11	5		4	1	1	4							1	11	59
3UEB517	2 Ser.	7	9	109	2	3	1	4									
	of 3	11	5		4	1	1	4							1	10	60
3UEB518	2 Ser.	7	11	109	2	4	1	4									
	of 3	11	7		4	2	1	4							1	10	61
3UEB519	6 Ser.	8	1	109	2	5	1	4									
	of 3	11	7		4	2	1	4							1	9	185
3UEB 521	30	12	7	109	4	8	1	4									394
3UEB522	84	10	5	109	3	7	1	4									913
3UEB523	35	10	3	109	3	6	1	4									374
3UEB524	28	10	1	109	3	5	1	4									294
3UEB525	42	9	11	109	3	4	1	4									434
3UEB526	10	12	1	109	4	5	1	4									126
3UEB527	10	12	5	109	4	7	1	4									130
3UEB528	10	12	7	109	4	8	1	4									131
3UEB529	8	12	9	109	4	9	1	4									106
3UEB530	8	12	11	109	4	10	1	4									108
3UEB 531	12	13	1	109	4	11	1	4									164
3UEB 601	62	3	9	STR													349
3UEB602	62	4	3	STR													396
3UEB603	8	8	3	STR													99
3UEB604	4	6	9	126	0	11	4	6	1	11							41
3UEB605	4	6	11	142	1	11	1	10	2	7	0	11	2				42
3UEB606	8	3	6	STR													42
3UEB607	4	3	3	STR													20
3UEB608	4	7	0	142	1	11	1	10	2	8	0	11	4 1/2				42
3UEB609	12	4	0	STR													72
3UEB610	4	3	9	STR													23
3UEB 611	4	7	4	142	1	11	1	10	3	0	0	11	7 1/2				44
3UEB612	12	4	9	STR													86
3UEB613	4	7	7	142	1	11	1	10	3	3	0	11	9 1/2				46
3UEB614	12	5	3	STR													95
3UEB615	4	4	6	STR													27
3UEB616	4	7	11	142	1	11	1	9	3	8	0	11	12				48
3UEB617	12	5	9	STR													104
3UEB618	4	8	4	142	1	11	1	9	4	0	1	0	14 3/8				50
3UEB619	20	6	3	STR													188
3UEB620	4	5	0	STR													30
3UEB 621	4	8	8	142	1	11	1	9	4	4	1	0	16				52
3UEB622	8	6	9	STR													81
3UEB623	4	9	0	142	1	11	1	9	4	8	1	0	18				54
3UEB624	8	7	0	STR													84
3UEB625	4	5	9	STR													35
3UEB626	4	9	3	142	1	11	1	9	4	11	1	0	19 3/16				56
3UEB627	8	7	6	STR													90
3UEB628	4	9	6	142	1	11	1	9	5	2	1	0	20 9/16				57
3UEB629	8	7	9	STR													93
3UEB630	8	6	0	STR													72
3UEB 631	4	9	8	142	1	11	1	9	5	4	1	0	20 9/16				58
3UEB632	24	8	0	STR													288
3UEB633	12	9	11	142	1	11	1	9	5	6	1	0	22 1/8				179
3UEB 901	10	25	6	101	24	3											867
3UEB902	5	42	3	STR													718
3UEB903	16	27	11	101	26	8											1519
3UEB904	6	25	3	STR													515
3UEB 1001	6	30	0	STR													775
3UEB1002	12	25	9	101	24	4											1330
3UEB1003	8	19	0	104	16	4	3	0									654
3UEB1004	8	20	0	STR													688
3UEB1005	4	16	9	STR													288
3UEB1006	8	25	0	STR													861
3UEB1007	12	23	0	STR													1188
3UEB1010	14	22	9	STR													1371
3UEB 1011	21	29	5	100	26	7											2658
3UEB1012	2	13	6	STR													116
3UEB1013	2	14	0	STR													120
3UEB1014	2	14	6	STR													125

BAR BENDING DIAGRAMS

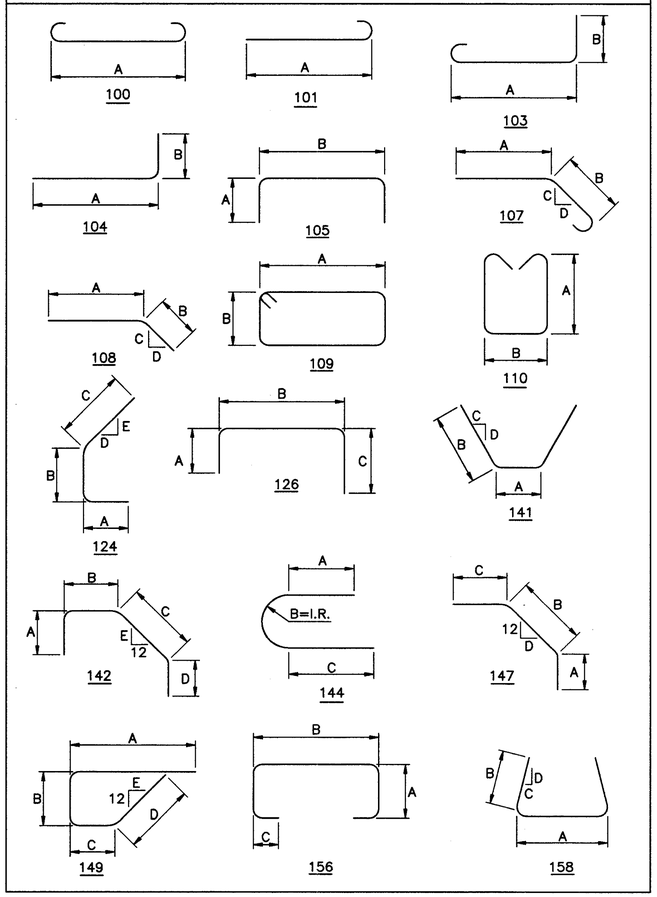

MECHANICAL SPLICE NOTE

AT LOCATIONS WHERE MECHANICAL SPLICES ARE REQUIRED, THE BAR DIMENSIONS ARE DETAILED TO THE CENTER OF THE SPLICE. IF ADDITIONAL BAR LENGTH IS REQUIRED FOR THE TYPE OF MECHANICAL SPLICE USED, THE CONTRACTOR SHALL ADJUST THE BAR DIMENSIONS ACCORDINGLY. PAYMENT SHALL BE BASED ON THE PLAN DIMENSIONS.

REINFORCING STEEL SAMPLES

REFER TO CMS SECTIONS 106.03, 700, 709.00, AND 709.01. SUFFICIENT ADDITIONAL REINFORCING STEEL SHALL BE PROVIDED FOR SAMPLING. RANDOM SAMPLES SHALL BE REPLACED IN THE STRUCTURES BY THE ADDITIONAL STEEL, SPLICED IN ACCORDANCE WITH 509.08

COUNTY BRIDGE NO. 84

HOWARD NEEDLES TAMMEN & BERGENDOFF
ARCHITECTS ENGINEERS PLANNERS
HNTB

REINFORCEMENT SCHEDULE
UPPER DECK FLOORBEAMS
BR. NO. CUY – 6 – 1499
REHABILITATION OF
VETERANS MEMORIAL BRIDGE
(U.S. 6, 20, 42 & S.R. 3 OVER CUYAHOGA RIVER)

CLEVELAND CUYAHOGA COUNTY OHIO

DRAWN J.L.V.	TRACED J.L.V.	CHECKED B.E.B.	REVIEWED C.A.B.	REVISED
DATE 5/27/94	DATE 5/27/94	DATE 5/31/94	DATE 6/01/94	SHEET 254/270

\11646\CONCRETE\RSFBMS1.DWG

FHWA REGION	STATE	PROJECT	
5	OHIO		

389/412

CUYAHOGA COUNTY
CUY – 6 – 14.99

BAR SCHEDULE

MARK	NUMBER REQ'D	LENGTH FT.	LENGTH IN.	TYPE	A FT.	A IN.	B FT.	B IN.	C FT.	C IN.	D FT.	D IN.	E FT.	E IN.	SER. INCR. FT.	SER. INCR. IN.	WEIGHT (LBS.)
SPAN 3 – UPPER DECK FLOORBEAMS – EPOXY COATED BARS (CONTINUED)																	
3UEB1015	2	15	1	STR													130
3UEB1016	2	17	6	STR													151
3UEB1019	4	27	0	STR													465
3UEB1020	2	27	7	STR													237
3UEB 1021	2	28	0	STR													241
3UEB1022	2	28	7	STR													246
3UEB1023	2	29	2	STR													251
3UEB1024	2	31	7	STR													272
																TOTAL WEIGHT =	25,976
PIER 3 – UPPER DECK FLOORBEAMS – EPOXY COATED BARS																	
P3UEB 401	60	29	7	STR													1186
P3UEB402	30	27	6	STR													551
P3UEB403	20	7	2	109	1	8	1	8									96
P3UEB404	6	5	0	109	0	11	1	4									20
P3UEB 501	36	5	0	STR													188
P3UEB502	30	12	1	109	4	5	1	4									378
P3UEB503	36	12	5	109	4	7	1	4									466
P3UEB504	30	12	7	109	4	8	1	4									394
P3UEB505	24	12	9	109	4	9	1	4									319
P3UEB506	24	12	11	109	4	10	1	4									323
P3UEB507	36	13	1	109	4	11	1	4									491
P3UEB 901	18	24	3	104	19	11	4	7									1484
P3UEB902	15	42	3	STR													2155
P3UEB903	48	29	8	101	28	5											4842
P3UEB904	18	25	3	STR													1545
P3UEB905	12	21	2	101	19	11											864
																TOTAL WEIGHT =	15,302
PIER 4 – UPPER DECK FLOORBEAMS – EPOXY COATED BARS																	
P4UEB 401	60	29	7	STR													1186
P4UEB402	30	27	6	STR													551
P4UEB403	20	7	2	109	1	8	1	8									96
P4UEB404	6	5	0	109	0	11	1	4									20
P4UEB 501	36	5	0	STR													188
P4UEB502	30	11	11	109	4	4	1	4									373
P4UEB503	36	12	1	109	4	5	1	4									454
P4UEB504	30	12	5	109	4	7	1	4									389
P4UEB505	24	12	7	109	4	8	1	4									315
P4UEB506	24	12	9	109	4	9	1	4									319
P4UEB507	36	12	11	109	4	10	1	4									485
P4UEB 901	18	24	1	104	19	11	4	5									1474
P4UEB902	15	42	3	STR													2155
P4UEB903	48	29	8	101	28	5											4842
P4UEB904	18	25	3	STR													1545
P4UEB905	12	21	2	101	19	11											864
																TOTAL WEIGHT =	15256
SPAN 5 – UPPER DECK FLOORBEAMS – EPOXY COATED BARS																	
5UEB 401	64	26	7	STR													1136
5UEB402	16	30	0	STR													321
5UEB403	10	5	7	105	2	3	1	3									37
5UEB404	16	5	0	109	0	11	1	4									53
5UEB405	4	5	10	109	1	4	1	4									16
5UEB 501	40	5	0	STR													209
5UEB502	22	9	7	109	3	2	1	4									220
5UEB503	12	9	9	109	3	3	1	4									122
5UEB504	20	10	1	109	3	5	1	4									210
5UEB505	22	10	3	109	3	6	1	4									235
5UEB506	20	10	5	109	3	7	1	4									217
5UEB507	10	10	7	109	3	8	1	4									110
5UEB508	4	8	11	109	2	10	1	4									37
5UEB509	2	10	1	109	3	5	1	4									21
5UEB510	2	10	7	109	3	8	1	4									22
5UEB 511	2	10	11	109	3	10	1	4									23
5UEB512	2	8	3	109	2	6	1	4									17
5UEB513	2	11	1	109	3	11	1	4									23

BAR SCHEDULE

MARK	NUMBER REQ'D	LENGTH FT.	LENGTH IN.	TYPE	A FT.	A IN.	B FT.	B IN.	C FT.	C IN.	D FT.	D IN.	E FT.	E IN.	SER. INCR. FT.	SER. INCR. IN.	WEIGHT (LBS.)
SPAN 5 – UPPER DECK FLOORBEAMS – EPOXY COATED BARS (CONTINUED)																	
5UEB514	2	11	3	109	4	0	1	4									23
5UEB515	2	9	1	109	2	11	1	4									19
5UEB516	2 Ser.	7	7	109	2	2	1	4									
	of 3	11	5		4	1	1	4							1	11	59
5UEB517	2 Ser.	7	9	109	2	3	1	4									
	of 3	11	5		4	1	1	4							1	10	60
5UEB518	2 Ser.	7	11	109	2	4	1	4									
	of 3	11	7		4	2	1	4							1	10	61
5UEB520	6 Ser.	8	1	109	2	5	1	4									
	of 3	11	7		4	2	1	4							1	9	185
5UEB 521	28	12	7	109	4	8	1	4									367
5UEB522	48	10	3	109	3	6	1	4									513
5UEB523	20	9	11	109	3	4	1	4									207
5UEB524	16	9	9	109	3	3	1	4									163
5UEB525	24	9	7	109	3	2	1	4									240
5UEB526	10	11	11	109	4	4	1	4									124
5UEB527	10	12	1	109	4	5	1	4									126
5UEB528	10	12	5	109	4	7	1	4									130
5UEB529	8	12	7	109	4	8	1	4									105
5UEB530	8	12	9	109	4	9	1	4									106
5UEB 531	12	12	11	109	4	10	1	4									162
5UEB 601	44	3	9	STR													248
5UEB602	44	4	3	STR													281
5UEB603	8	8	3	STR													99
5UEB605	4	6	11	142	1	11	1	10	2	7	0	11	2				42
5UEB606	8	3	6	STR													42
5UEB607	4	3	3	STR													20
5UEB608	4	7	0	142	1	11	1	10	2	8	0	11	4 1/2				42
5UEB609	12	4	0	STR													72
5UEB610	4	3	9	STR													23
5UEB 611	4	7	4	142	1	11	1	10	3	0	0	11	7 1/2				44
5UEB612	12	4	9	STR													86
5UEB613	4	7	7	142	1	11	1	10	3	3	0	11	9 1/2				46
5UEB614	12	5	3	STR													95
5UEB615	4	4	6	STR													27
5UEB616	4	7	11	142	1	11	1	9	3	8	0	11	12				48
5UEB617	12	5	9	STR													104
5UEB618	4	8	4	142	1	11	1	9	4	0	1	0	14 3/8				50
5UEB619	20	6	3	STR													188
5UEB620	4	5	0	STR													30
5UEB 621	4	8	8	142	1	11	1	9	4	4	1	0	16				52
5UEB622	8	6	9	STR													81
5UEB623	4	9	0	142	1	11	1	9	4	8	1	0	18				54
5UEB624	8	7	0	STR													84
5UEB625	4	5	9	STR													35
5UEB626	4	9	3	142	1	11	1	9	4	11	1	0	19 3/16				56
5UEB627	8	7	6	STR													90
5UEB628	4	9	6	142	1	11	1	9	5	2	1	0	20 9/16				57
5UEB629	8	7	9	STR													93
5UEB630	8	6	0	STR													72
5UEB 631	4	9	8	142	1	11	1	9	5	4	1	0	20 9/16				58
5UEB632	8	8	0	STR													96
5UEB633	16	8	0	STR													192
5UEB634	12	9	11	142	1	11	1	9	5	6	1	0	22 1/8				179
5UEB 901	10	25	6	101	24	3											867
5UEB902	5	42	3	STR													718
5UEB903	16	27	11	101	26	8											1519
5UEB904	6	25	3	STR													515
5UEB 1001	6	30	0	STR													775
5UEB1002	12	25	9	101	24	4											1330
5UEB1003	8	19	0	104	16	4	3	0									654
5UEB1004	8	20	0	STR													688
5UEB1005	4	16	9	STR													288
5UEB1006	8	25	0	STR													861
5UEB1007	12	23	0	STR													1188
5UEB1010	8	22	9	STR													783
5UEB 1011	12	29	5	100	26	7											1519
5UEB1013	2	14	0	STR													120
5UEB1014	2	14	6	STR													125

BAR BENDING DIAGRAMS

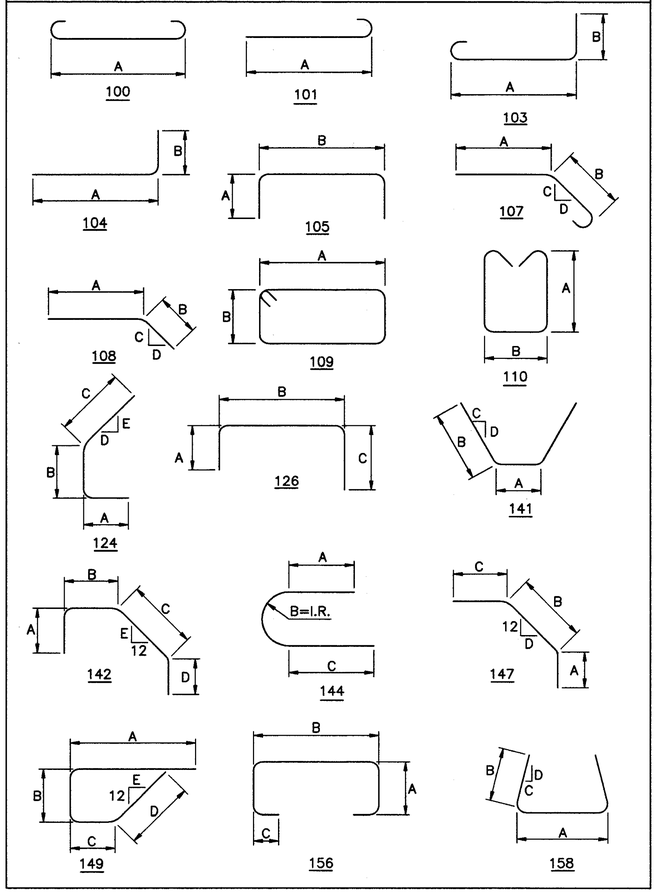

MECHANICAL SPLICE NOTE

AT LOCATIONS WHERE MECHANICAL SPLICES ARE REQUIRED, THE BAR DIMENSIONS ARE DETAILED TO THE CENTER OF THE SPLICE. IF ADDITIONAL BAR LENGTH IS REQUIRED FOR THE TYPE OF MECHANICAL SPLICE USED, THE CONTRACTOR SHALL ADJUST THE BAR DIMENSIONS ACCORDINGLY. PAYMENT SHALL BE BASED ON THE PLAN DIMENSIONS.

REINFORCING STEEL SAMPLES

REFER TO CMS SECTIONS 106.03, 700, 709.00, AND 709.01. SUFFICIENT ADDITIONAL REINFORCING STEEL SHALL BE PROVIDED FOR SAMPLING. RANDOM SAMPLES SHALL BE REPLACED IN THE STRUCTURES BY THE ADDITIONAL STEEL, SPLICED IN ACCORDANCE WITH 509.08

COUNTY BRIDGE NO. 84

HOWARD NEEDLES TAMMEN & BERGENDOFF
ARCHITECTS ENGINEERS PLANNERS
HNTB

REINFORCEMENT SCHEDULE
UPPER DECK FLOORBEAMS
BR. NO. CUY – 6 – 1499
REHABILITATION OF
VETERANS MEMORIAL BRIDGE
(U.S. 6, 20, 42 & S.R. 3 OVER CUYAHOGA RIVER)

CLEVELAND CUYAHOGA COUNTY OHIO

DRAWN J.L.V.	TRACED J.L.V.	CHECKED B.E.B.	REVIEWED C.A.B.	REVISED
DATE 5/27/94	DATE 5/27/94	DATE 5/31/94	DATE 6/01/94	SHEET 255/270

\11646\CONCRETE\RSFBMS1.DWG

FHWA REGION	STATE	PROJECT	
5	OHIO		

390/412

CUYAHOGA COUNTY
CUY – 6 – 14.99

BAR SCHEDULE

MARK	NUMBER REQ'D	LENGTH FT.	LENGTH IN.	TYPE	A FT.	A IN.	B FT.	B IN.	C FT.	C IN.	D FT.	D IN.	E FT.	E IN.	SER. INCR. FT.	SER. INCR. IN.	WEIGHT (LBS.)
SPAN 5 – UPPER DECK FLOORBEAMS – EPOXY COATED BARS (CONTINUED)																	
5UEB1017	2	18	6	STR													159
5UEB1018	2	18	5	STR													158
5UEB 1021	2	28	0	STR													241
5UEB1022	2	28	7	STR													246
5UEB1025	2	32	7	STR													280
5UEB1026	2	32	6	STR													280
																TOTAL WEIGHT =	21,779
SPAN 6 – UPPER DECK FLOORBEAMS – EPOXY COATED BARS																	
6UEB 401	48	25	7	STR													820
6UEB402	12	30	0	STR													240
6UEB403	32	5	7	105	2	3	1	3									119
6UEB404	14	5	0	109	0	11	1	4									47
6UEB405	8	5	10	109	1	4	1	4									31
6UEB 501	36	5	0	STR													188
6UEB502	44	9	7	109	3	2	1	4									440
6UEB503	20	9	11	109	3	4	1	4									207
6UEB504	40	10	1	109	3	5	1	4									421
6UEB505	44	10	3	109	3	6	1	4									470
6UEB506	40	10	5	109	3	7	1	4									435
6UEB507	20	10	7	109	3	8	1	4									221
6UEB508	24	10	3	109	3	6	1	4									257
6UEB509	8	10	1	109	3	5	1	4									84
6UEB510	8	9	9	109	3	3	1	4									81
6UEB 511	12	9	7	109	3	2	1	4									120
6UEB 521	1	12	1	109	4	5	1	4									13
6UEB522	12	10	3	109	3	6	1	4									128
6UEB523	5	10	1	109	3	5	1	4									53
6UEB524	4	9	9	109	3	3	1	4									41
6UEB525	6	9	7	109	3	2	1	4									60
6UEB 601	32	3	9	STR													180
6UEB602	32	4	3	STR													204
6UEB603	2	6	11	142	1	11	1	10	2	7	0	11	1				21
6UEB604	6	3	3	STR													29
6UEB 1001	12	30	0	STR													1549
6UEB1002	24	24	9	101	23	4											2556
6UEB1003	16	18	0	104	15	4	3	0									1239
6UEB1004	16	20	0	STR													1377
6UEB1005	8	15	9	STR													542
6UEB1006	16	24	0	STR													1652
6UEB1007	24	23	0	STR													2375
6UEB1008	4	26	0	STR													448
6UEB1009	6	21	9	STR													562
6UEB1010	9	28	5	100	25	7											1100
6UEB 1011	2	13	8	STR													118
6UEB1012	2	26	9	STR													230
																TOTAL WEIGHT =	18658
SPAN 7 – UPPER DECK FLOORBEAMS – EPOXY COATED BARS																	
7UEB 401	48	25	7	STR													820
7UEB402	12	30	0	STR													240
7UEB403	38	5	7	105	2	3	1	3									142
7UEB404	14	5	0	109	0	11	1	4									47
7UEB405	8	5	10	109	1	4	1	4									31
7UEB 501	36	5	0	STR													188
7UEB502	44	9	7	109	3	2	1	4									440
7UEB503	20	9	11	109	3	4	1	4									207
7UEB504	40	10	1	109	3	5	1	4									421
7UEB505	44	10	3	109	3	6	1	4									470
7UEB506	40	10	5	109	3	7	1	4									435
7UEB507	20	10	7	109	3	8	1	4									221
7UEB508	36	10	3	109	3	6	1	4									385
7UEB509	12	10	1	109	3	5	1	4									126
7UEB510	12	9	9	109	3	3	1	4									122
7UEB 511	18	9	7	109	3	2	1	4									180
7UEB 601	34	3	9	STR													192
7UEB602	34	4	3	STR													217

BAR SCHEDULE

MARK	NUMBER REQ'D	LENGTH FT.	LENGTH IN.	TYPE	A FT.	A IN.	B FT.	B IN.	C FT.	C IN.	D FT.	D IN.	E FT.	E IN.	SER. INCR. FT.	SER. INCR. IN.	WEIGHT (LBS.)
SPAN 7 – UPPER DECK FLOORBEAMS – EPOXY COATED BARS (CONTINUED)																	
7UEB 1001	12	30	0	STR													1549
7UEB1002	24	24	9	101	23	4											2556
7UEB1003	16	18	0	104	15	4	3	0									1239
7UEB1004	16	20	0	STR													1377
7UEB1005	8	15	9	STR													542
7UEB1006	16	24	0	STR													1652
7UEB1007	24	23	0	STR													2375
7UEB1008	6	26	0	STR													671
7UEB1009	6	21	9	STR													562
7UEB1010	9	28	5	100	25	7											1100
																TOTAL WEIGHT =	18,507
SPAN 8 – UPPER DECK FLOORBEAMS – EPOXY COATED BARS																	
8UEB 401	40	25	7	STR													684
8UEB402	12	30	0	STR													240
8UEB403	32	5	7	105	2	3	1	3									119
8UEB404	12	5	0	109	0	11	1	4									40
8UEB405	8	5	10	109	1	4	1	4									31
8UEB 501	32	5	0	STR													167
8UEB502	44	9	7	109	3	2	1	4									440
8UEB503	20	9	11	109	3	4	1	4									207
8UEB504	40	10	1	109	3	5	1	4									421
8UEB505	44	10	3	109	3	6	1	4									470
8UEB506	40	10	5	109	3	7	1	4									435
8UEB507	20	10	7	109	3	8	1	4									221
8UEB508	24	10	3	109	3	6	1	4									257
8UEB509	8	10	1	109	3	5	1	4									84
8UEB510	8	9	9	109	3	3	1	4									81
8UEB 511	12	9	7	109	3	2	1	4									120
8UEB 601	18	3	9	STR													101
8UEB602	18	4	3	STR													115
8UEB 1001	12	30	0	STR													1549
8UEB1002	24	24	9	101	23	4											2556
8UEB1003	16	18	0	104	15	4	3	0									1239
8UEB1004	16	20	0	STR													1377
8UEB1005	8	15	9	STR													542
8UEB1006	16	24	0	STR													1652
8UEB1007	24	23	0	STR													2375
8UEB1008	4	26	0	STR													448
8UEB1009	4	21	9	STR													374
8UEB1010	6	28	5	100	25	7											734
																TOTAL WEIGHT =	17,079
SPAN 9 – UPPER DECK FLOORBEAMS – EPOXY COATED BARS																	
9UEB 401	24	25	7	STR													410
9UEB402	12	30	0	STR													240
9UEB403	20	5	7	105	2	3	1	3									75
9UEB404	8	5	0	109	0	11	1	4									27
9UEB405	8	5	10	109	1	4	1	4									31
9UEB 501	24	5	0	STR													125
9UEB502	44	9	7	109	3	2	1	4									440
9UEB503	20	9	11	109	3	4	1	4									207
9UEB504	40	10	1	109	3	5	1	4									421
9UEB505	44	10	3	109	3	6	1	4									470
9UEB506	40	10	5	109	3	7	1	4									435
9UEB507	20	10	7	109	3	8	1	4									221
9UEB 601	16	3	9	STR													90
9UEB602	16	4	3	STR													102
9UEB 1001	12	30	0	STR													1549
9UEB1002	24	24	9	101	23	4											2556
9UEB1003	16	18	0	104	15	4	3	0									1239
9UEB1004	16	20	0	STR													1377
9UEB1005	8	15	9	STR													542
9UEB1006	16	24	0	STR													1652
9UEB1007	24	23	0	STR													2375
																TOTAL WEIGHT =	14584

BAR BENDING DIAGRAMS

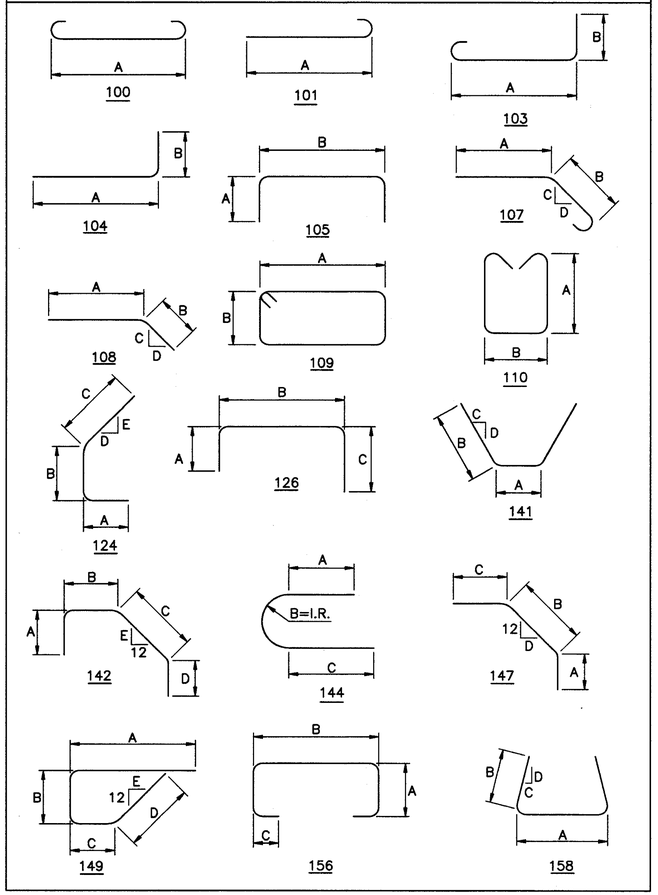

MECHANICAL SPLICE NOTE

AT LOCATIONS WHERE MECHANICAL SPLICES ARE REQUIRED, THE BAR DIMENSIONS ARE DETAILED TO THE CENTER OF THE SPLICE. IF ADDITIONAL BAR LENGTH IS REQUIRED FOR THE TYPE OF MECHANICAL SPLICE USED, THE CONTRACTOR SHALL ADJUST THE BAR DIMENSIONS ACCORDINGLY. PAYMENT SHALL BE BASED ON THE PLAN DIMENSIONS.

REINFORCING STEEL SAMPLES

REFER TO CMS SECTIONS 106.03, 700, 709.00, AND 709.01. SUFFICIENT ADDITIONAL REINFORCING STEEL SHALL BE PROVIDED FOR SAMPLING. RANDOM SAMPLES SHALL BE REPLACED IN THE STRUCTURES BY THE ADDITIONAL STEEL, SPLICED IN ACCORDANCE WITH 509.08

COUNTY BRIDGE NO. 84

HOWARD NEEDLES TAMMEN & BERGENDOFF
ARCHITECTS ENGINEERS PLANNERS
HNTB

REINFORCEMENT SCHEDULE
UPPER DECK FLOORBEAMS
BR. NO. CUY – 6 – 1499
REHABILITATION OF
VETERANS MEMORIAL BRIDGE
(U.S. 6, 20, 42 & S.R. 3 OVER CUYAHOGA RIVER)

CLEVELAND CUYAHOGA COUNTY OHIO

DRAWN J.L.V.	TRACED J.L.V.	CHECKED B.E.B.	REVIEWED C.A.B.	REVISED
DATE 5/27/94	DATE 5/27/94	DATE 5/31/94	DATE 6/01/94	SHEET 256/270

\11646\CONCRETE\RSFBMS1.DWG

FHWA REGION	STATE	PROJECT	
5	OHIO		

391/412

CUYAHOGA COUNTY
CUY – 6 – 14.99

BAR SCHEDULE

MARK	NUMBER REQ'D	LENGTH FT.	LENGTH IN.	TYPE	A FT.	A IN.	B FT.	B IN.	C FT.	C IN.	D FT.	D IN.	E FT.	E IN.	SER. INCR. FT.	SER. INCR. IN.	WEIGHT (LBS.)
SPAN 10 – UPPER DECK FLOORBEAMS – EPOXY COATED BARS																	
10UEB 401	24	25	7	STR													410
10UEB402	12	30	0	STR													240
10UEB403	20	5	7	105	2	3	1	3									75
10UEB404	8	5	0	109	0	11	1	4									27
10UEB405	8	5	10	109	1	4	1	4									31
10UEB 501	24	5	0	STR													125
10UEB502	44	9	7	109	3	2	1	4									440
10UEB503	20	9	11	109	3	4	1	4									207
10UEB504	40	10	1	109	3	5	1	4									421
10UEB505	44	10	3	109	3	6	1	4									470
10UEB506	40	10	5	109	3	7	1	4									435
10UEB507	20	10	7	109	3	8	1	4									221
10UEB 601	16	3	9	STR													90
10UEB602	16	4	3	STR													102
10UEB 1001	12	30	0	STR													1549
10UEB1002	24	24	9	101	23	4											2556
10UEB1003	16	18	0	104	15	4	3	0									1239
10UEB1004	16	20	0	STR													1377
10UEB1005	8	15	9	STR													542
10UEB1006	16	24	0	STR													1652
10UEB1007	24	23	0	STR													2375
																TOTAL WEIGHT =	14584
SPAN 11 – UPPER DECK FLOORBEAMS – EPOXY COATED BARS																	
11UEB 401	12	25	7	STR													205
11UEB402	6	30	0	STR													120
11UEB403	10	5	7	105	2	3	1	3									37
11UEB404	8	5	0	109	0	11	1	4									27
11UEB405	4	5	10	109	1	4	1	4									16
11UEB406	8	29	0	STR													155
11UEB407	8	29	10	STR													159
11UEB 501	20	5	0	STR													104
11UEB502	22	9	7	109	3	2	1	4									220
11UEB503	10	9	11	109	3	4	1	4									103
11UEB504	20	10	1	109	3	5	1	4									210
11UEB505	22	10	3	109	3	6	1	4									235
11UEB506	20	10	5	109	3	7	1	4									217
11UEB507	10	10	7	109	3	8	1	4									110
11UEB509	42	10	1	109	3	5	1	4									442
11UEB510	14	9	11	109	3	4	1	4									145
11UEB 511	20	9	9	109	3	3	1	4									203
11UEB 601	20	3	9	STR													113
11UEB602	20	4	3	STR													128
11UEB 1001	6	30	0	STR													775
11UEB1002	12	24	9	101	23	4											1278
11UEB1003	8	18	0	104	15	4	3	0									620
11UEB1004	8	20	0	STR													688
11UEB1005	4	15	9	STR													271
11UEB1006	8	24	0	STR													826
11UEB1007	12	23	0	STR													1188
11UEB1008	2	30	5	101	29	0											262
11UEB1009	2	31	3	101	29	10											269
11UEB1010	4	31	10	100	29	0											548
11UEB 1011	4	32	8	100	29	10											562
11UEB1012	4	22	0	STR													379
11UEB1013	4	22	10	STR													393
																TOTAL WEIGHT =	11008
SPAN 12 – UPPER DECK FLOORBEAMS – EPOXY COATED BARS																	
12UEB404	10	5	0	109	0	11	1	4									33
12UEB408	8	30	9	STR													164
12UEB409	20	30	9	STR													411
12UEB410	2	5	6	STR													7
12UEB 501	12	5	0	STR													63
12UEB513	9	9	7	109	2	4	2	2									90

BAR SCHEDULE

MARK	NUMBER REQ'D	LENGTH FT.	LENGTH IN.	TYPE	A FT.	A IN.	B FT.	B IN.	C FT.	C IN.	D FT.	D IN.	E FT.	E IN.	SER. INCR. FT.	SER. INCR. IN.	WEIGHT (LBS.)
SPAN 12 – UPPER DECK FLOORBEAMS – EPOXY COATED BARS (CONTINUED)																	
12UEB514	9	9	9	109	2	5	2	2									92
12UEB515	5	9	11	109	2	6	2	2									52
12UEB516	9	10	1	109	2	7	2	2									95
12UEB517	9	10	3	109	2	8	2	2									96
12UEB518	17	10	1	109	2	9	2	0									179
12UEB519	5	10	5	109	2	11	2	0									54
12UEB520	8	10	3	109	2	10	2	0									86
12UEB 521	9	9	11	109	2	8	2	0									93
12UEB522	8	9	9	109	2	7	2	0									81
12UEB523	6	9	7	109	2	6	2	0									60
12UEB524	6	9	5	109	2	5	2	0									59
12UEB525	3	10	9	109	3	1	2	0									34
12UEB526	100	5	9	149	1	10	1	9	0	5	2	0	6–3/8				600
12UEB527	3	6	5	149	1	10	1	9	1	1	2	0	6–3/8				20
12UEB528	103	3	6	STR													376
12UEB 601	4	3	9	STR													23
12UEB602	4	4	3	STR													26
12UEB603	2	30	9	STR													92
12UEB604	2	5	6	STR													17
12UEB 701	24	21	0	STR													1030
12UEB 801	6	17	11	STR													287
12UEB802	12	20	0	STR													641
12UEB803	6	21	2	STR													339
12UEB 1101	6	33	11	100	30	9											1081
12UEB1102	2	30	9	STR													327
12UEB1103	4	18	9	STR													398
12UEB1104	4	32	9	101	31	2											696
12UEB1105	3	25	8	STR													409
12UEB1106	4	29	6	101	27	11											627
12UEB1107	3	25	8	STR													409
																TOTAL WEIGHT =	9147
SPAN 13 – UPPER DECK FLOORBEAMS – EPOXY COATED BARS																	
13UEB 401	16	32	3	STR													345
13UEB402	8	30	0	STR													160
13UEB403	12	5	7	105	2	3	1	3									45
13UEB404	20	5	0	109	0	11	1	4									67
13UEB405	2	5	10	109	1	4	1	4									8
13UEB406	24	31	1	STR													498
13UEB407	8	30	3	STR													162
13UEB408	8	30	5	STR													163
13UEB409	20	30	9	STR													411
13UEB410	2	3	9	STR													5
13UEB 501	40	5	0	STR													209
13UEB502	7	11	5	109	4	1	1	4									83
13UEB503	14	11	7	109	4	2	1	4									169
13UEB504	23	11	11	109	4	4	1	4									286
13UEB505	33	12	3	109	4	6	1	4									422
13UEB506	9	12	7	109	4	8	1	4									118
13UEB507	15	12	5	109	4	7	1	4									194
13UEB508	4	12	1	109	4	5	1	4									50
13UEB509	84	10	1	109	3	5	1	4									883
13UEB510	28	9	11	109	3	4	1	4									290
13UEB 511	28	9	7	109	3	2	1	4									280
13UEB512	16	9	5	109	3	1	1	4									157
13UEB513	9	9	7	109	2	4	2	2									90
13UEB514	9	9	9	109	2	5	2	2									92
13UEB515	5	9	11	109	2	6	2	2									52
13UEB516	9	10	1	109	2	7	2	2									95
13UEB517	9	10	3	109	2	8	2	2									96
13UEB518	17	10	1	109	2	9	2	0									179
13UEB519	5	10	5	109	2	11	2	0									54
13UEB520	8	10	3	109	2	10	2	0									86
13UEB 521	9	9	11	109	2	8	2	0									93
13UEB522	8	9	9	109	2	7	2	0									81
13UEB523	6	9	7	109	2	6	2	0									60

BAR BENDING DIAGRAMS

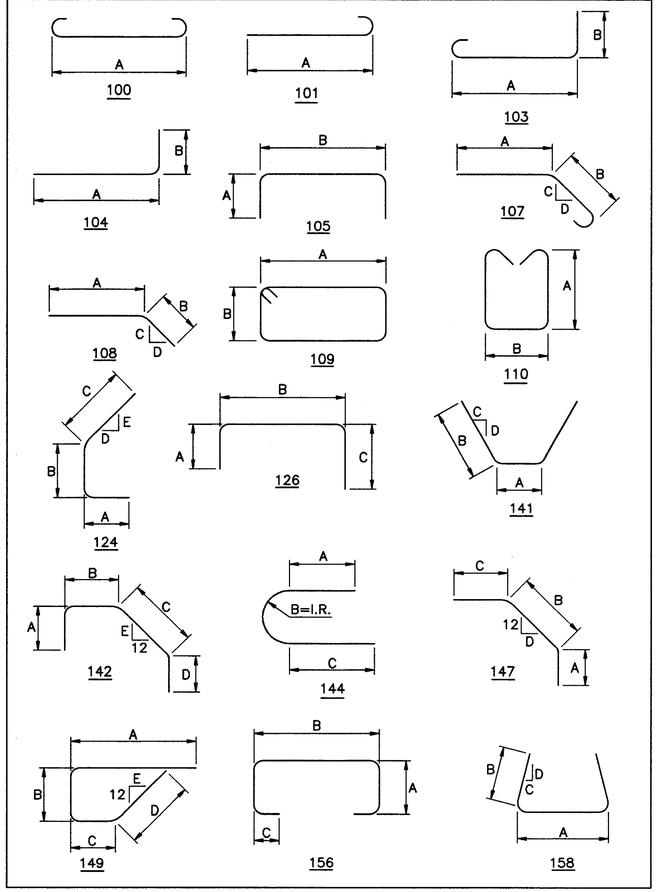

MECHANICAL SPLICE NOTE

AT LOCATIONS WHERE MECHANICAL SPLICES ARE REQUIRED, THE BAR DIMENSIONS ARE DETAILED TO THE CENTER OF THE SPLICE. IF ADDITIONAL BAR LENGTH IS REQUIRED FOR THE TYPE OF MECHANICAL SPLICE USED, THE CONTRACTOR SHALL ADJUST THE BAR DIMENSIONS ACCORDINGLY. PAYMENT SHALL BE BASED ON THE PLAN DIMENSIONS.

REINFORCING STEEL SAMPLES

REFER TO CMS SECTIONS 106.03, 700, 709.00, AND 709.01. SUFFICIENT ADDITIONAL REINFORCING STEEL SHALL BE PROVIDED FOR SAMPLING. RANDOM SAMPLES SHALL BE REPLACED IN THE STRUCTURES BY THE ADDITIONAL STEEL, SPLICED IN ACCORDANCE WITH 509.08

COUNTY BRIDGE NO. 84

HOWARD NEEDLES TAMMEN & BERGENDOFF
ARCHITECTS ENGINEERS PLANNERS
HNTB

REINFORCEMENT SCHEDULE
UPPER DECK FLOORBEAMS
BR. NO. CUY – 6 – 1499
REHABILITATION OF
VETERANS MEMORIAL BRIDGE
(U.S. 6, 20, 42 & S.R. 3 OVER CUYAHOGA RIVER)
CLEVELAND CUYAHOGA COUNTY OHIO

DRAWN J.L.V.	TRACED J.L.V.	CHECKED B.E.B.	REVIEWED C.A.B.	REVISED
DATE 5/27/94	DATE 5/27/94	DATE 5/31/94	DATE 6/01/94	SHEET 257/270

\11646\CONCRETE\RSFBMS1.DWG

FHWA REGION	STATE	PROJECT	
5	OHIO		

392/412

CUYAHOGA COUNTY
CUY – 6 – 14.99

BAR SCHEDULE

MARK	NUMBER REQ'D	LENGTH FT.	LENGTH IN.	TYPE	A FT.	A IN.	B FT.	B IN.	C FT.	C IN.	D FT.	D IN.	E FT.	E IN.	SER. INCR. FT.	SER. INCR. IN.	WEIGHT (LBS.)
SPAN 13 – UPPER DECK FLOORBEAMS – EPOXY COATED BARS (CONTINUED)																	
13UEB524	6	9	5	109	2	5	2	0									59
13UEB525	3	10	9	109	3	1	2	0									34
13UEB526	100	5	9	149	1	10	1	9	0	5	2	0	6-3/8				600
13UEB527	3	6	5	149	1	10	1	9	1	1	2	0	6-3/8				20
13UEB528	103	3	6	STR													376
13UEB 601	36	3	9	STR													203
13UEB602	36	4	3	STR													230
13UEB603	2	30	5	STR													91
13UEB604	2	3	9	STR													11
13UEB 701	24	21	7	STR													1059
13UEB 801	6	17	11	STR													287
13UEB802	12	20	0	STR													641
13UEB803	6	21	2	STR													339
13UEB 1001	6	30	0	STR													775
13UEB1002	12	31	4	101	29	11											1618
13UEB1003	8	17	7	104	14	11	3	0									605
13UEB1004	8	23	0	STR													792
13UEB1005	4	15	6	STR													267
13UEB1006	8	29	6	STR													1016
13UEB1007	12	30	0	STR													1549
13UEB1008	6	32	6	101	31	1											839
13UEB1009	2	31	8	101	30	3											273
13UEB1010	12	33	11	100	31	1											1751
13UEB 1011	4	33	1	100	30	3											569
13UEB1012	12	24	1	STR													1244
13UEB1013	4	23	3	STR													400
13UEB 1101	6	33	7	100	30	5											1071
13UEB1102	2	30	5	STR													323
13UEB1103	4	18	5	STR													391
13UEB1104	4	32	9	101	31	2											696
13UEB1105	3	25	8	STR													409
13UEB1106	4	29	6	101	27	11											627
13UEB1107	3	25	8	STR													409
																TOTAL WEIGHT =	25,557
EAST SIDE STATION – UPPER DECK FLOORBEAMS – EPOXY COATED BARS																	
ESUEB 401	25	32	3	STR													539
ESUEB402	8	30	0	STR													160
ESUEB403	57	5	7	105	2	3	1	3									213
ESUEB404	74	5	0	109	0	11	1	4									247
ESUEB405	2	5	10	109	1	4	1	4									8
ESUEB406	32	27	2	STR													581
ESUEB407	40	31	1	STR													831
ESUEB408	20	4	2	STR													56
ESUEB409	8	30	5	STR													163
ESUEB410	144	30	8	STR													2950
ESUEB 411	18	23	0	STR													277
ESUEB412	16	41	0	STR													438
ESUEB413	2	12	0	STR													16
ESUEB414	48	40	0	STR													1283
ESUEB415	18	20	3	STR													243
ESUEB 501	164	5	0	STR													855
ESUEB502	259	11	5	109	4	1	1	4									3084
ESUEB503	64	11	7	109	4	2	1	4									773
ESUEB504	76	11	11	109	4	4	1	4									945
ESUEB505	84	12	3	109	4	6	1	4									1073
ESUEB506	9	12	7	109	4	8	1	4									118
ESUEB507	17	12	5	109	4	7	1	4									220
ESUEB508	4	12	1	109	4	5	1	4									50
ESUEB509	12	9	5	109	3	1	1	4									118
ESUEB510	95	9	7	109	3	2	1	4									950
ESUEB 511	64	9	9	109	3	3	1	4									651
ESUEB512	164	9	11	109	3	4	1	4									1696
ESUEB513	155	10	1	109	3	5	1	4									1630
ESUEB514	136	10	3	109	3	6	1	4									1454
ESUEB515	75	10	11	109	3	10	1	4									854
ESUEB516	45	11	1	109	3	11	1	4									520
ESUEB517	19	11	3	109	4	0	1	4									223
ESUEB518	5	11	9	109	4	3	1	4									61
ESUEB519	32	10	5	109	3	7	1	4									348
ESUEB520	19	10	7	109	3	8	1	4									210

BAR SCHEDULE

MARK	NUMBER REQ'D	LENGTH FT.	LENGTH IN.	TYPE	A FT.	A IN.	B FT.	B IN.	C FT.	C IN.	D FT.	D IN.	E FT.	E IN.	SER. INCR. FT.	SER. INCR. IN.	WEIGHT (LBS.)
EAST SIDE STATION – UPPER DECK FLOORBEAMS – EPOXY COATED BARS (CONTINUED)																	
ESUEB 521	24	10	9	109	3	9	1	4									269
ESUEB522	57	8	7	109	2	2	1	10									510
ESUEB523	14	7	3	109	1	6	1	10									106
ESUEB524	9	7	9	109	1	3	1	10									73
ESUEB525	6	29	10	STR													187
ESUEB526	6	28	0	STR													175
ESUEB527	6	26	0	STR													163
ESUEB528	6	23	8	STR													148
ESUEB529	8	38	11	STR													325
ESUEB530	4	5	7	104	2	8	3	0									23
ESUEB 531	4	4	8	104	1	9	3	0									19
ESUEB532	1 Ser.	11	7	109	4	7	0	11									
	of 27	9	5	109	3	6	0	11							0	1	296
ESUEB 601	144	4	6	STR													973
ESUEB602	144	4	3	STR													919
ESUEB603	57	12	1	109	4	5	1	4									1035
ESUEB604	14	10	9	109	3	9	1	4									226
ESUEB605	9	11	3	109	4	0	1	4									152
ESUEB 801	3	31	8	100	29	10											254
ESUEB802	3	29	10	100	28	0											239
ESUEB803	3	27	10	100	26	0											223
ESUEB804	3	25	6	100	23	8											204
ESUEB 1001	18	30	0	STR													2324
ESUEB 1002	12	31	4	101	29	11											1618
ESUEB 1003	8	17	7	104	14	11	3	0									605
ESUEB 1004	8	23	0	STR													792
ESUEB 1005	4	15	4	STR													264
ESUEB 1006	8	29	6	STR													1016
ESUEB 1007	12	30	0	STR													1549
ESUEB 1008	4	28	4	101	26	11											488
ESUEB 1009	6	31	8	101	30	3											818
ESUEB 1010	4	14	10	101	13	5											255
ESUEB 1011	24	30	0	100	27	2											3098
ESUEB 1012	16	21	2	STR													1457
ESUEB 1013	30	33	11	100	31	1											4378
ESUEB 1014	20	24	1	STR													2073
ESUEB 1015	6	33	3	100	30	5											858
ESUEB 1016	4	25	3	STR													435
ESUEB 1017	4	9	6	STR													164
ESUEB 1018	18	35	8	101	34	3											2763
ESUEB 1019	52	25	3	STR													5650
ESUEB 1020	64	30	11	101	29	6											8514
ESUEB 1021	18	24	0	STR													1859
ESUEB 1022	40	17	2	104	14	6	3	0									2955
ESUEB 1023	32	36	3	103	32	2	3	0									4991
ESUEB 1024	4	31	0	103	26	11	3	0									534
ESUEB 1025	6	31	10	101	30	5											822
ESUEB 1026	2	34	3	STR													295
ESUEB 1027	8	27	0	STR													929
ESUEB 1028	4	27	5	STR													472
ESUEB 1029	4	30	9	STR													529
ESUEB 1030	4	17	7	101	16	2											303
ESUEB 1031	4	23	0	126	2	0	18	8	3	0							396
ESUEB 1032	6	31	4	101	29	11											809
ESUEB 1033	6	37	9	STR													975
ESUEB 1034	12	23	0	STR													1188
ESUEB 1035	6	31	6	101	30	1											813
ESUEB 1036	4	16	6	104	13	10	3	0									284
ESUEB 1037	4	16	6	104	13	10	3	0									284
ESUEB 1038	4	10	8	104	8	0	3	0									184
ESUEB 1039	8	18	5	126	2	0	14	1	3	0							634
ESUEB 1040	4	12	7	126	2	0	8	3	3	0							217
ESUEB 1041	4	16	2	101	14	9											278
ESUEB 1042	4	12	3	101	10	10											211
ESUEB 1101	3	30	0	STR													478
ESUEB 1102	3	20	8	104	18	0	3	0									329
ESUEB 1103	3	22	4	126	18	0	3	0	2	0							356
ESUEB 1104	5	17	0	STR													452
ESUEB 1105	10	34	7	101	33	0											1837
ESUEB 1106	4	26	4	101	24	9											560
ESUEB 1107	4	31	7	101	30	0											671
																TOTAL WEIGHT =	94,121

BAR BENDING DIAGRAMS

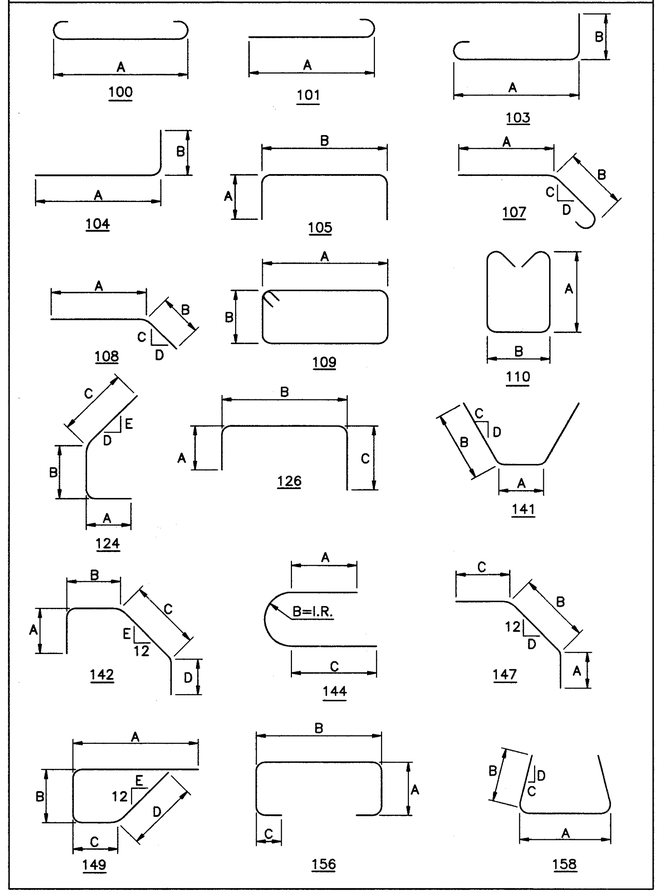

MECHANICAL SPLICE NOTE

AT LOCATIONS WHERE MECHANICAL SPLICES ARE REQUIRED, THE BAR DIMENSIONS ARE DETAILED TO THE CENTER OF THE SPLICE. IF ADDITIONAL BAR LENGTH IS REQUIRED FOR THE TYPE OF MECHANICAL SPLICE USED, THE CONTRACTOR SHALL ADJUST THE BAR DIMENSIONS ACCORDINGLY. PAYMENT SHALL BE BASED ON THE PLAN DIMENSIONS.

REINFORCING STEEL SAMPLES

REFER TO CMS SECTIONS 106.03, 700, 709.00, AND 709.01. SUFFICIENT ADDITIONAL REINFORCING STEEL SHALL BE PROVIDED FOR SAMPLING. RANDOM SAMPLES SHALL BE REPLACED IN THE STRUCTURES BY THE ADDITIONAL STEEL, SPLICED IN ACCORDANCE WITH 509.08

COUNTY BRIDGE NO. 84

HOWARD NEEDLES TAMMEN & BERGENDOFF
ARCHITECTS ENGINEERS PLANNERS
HNTB

REINFORCEMENT SCHEDULE
UPPER DECK FLOORBEAMS
BR. NO. CUY – 6 – 1499
REHABILITATION OF
VETERANS MEMORIAL BRIDGE
(U.S. 6, 20, 42 & S.R. 3 OVER CUYAHOGA RIVER)

CLEVELAND CUYAHOGA COUNTY OHIO

DRAWN J.L.V.	TRACED J.L.V.	CHECKED B.E.B.	REVIEWED C.A.B.	REVISED
DATE 5/27/94	DATE 5/27/94	DATE 5/31/94	DATE 6/01/94	SHEET 257A/270

\11646\CONCRETE\RSFBMS1.DWG

FHWA REGION	STATE	PROJECT	
5	OHIO		

393/412

CUYAHOGA COUNTY
CUY – 6 – 14.99

BAR SCHEDULE

MARK	NUMBER REQ'D	LENGTH FT.	LENGTH IN.	TYPE	A FT.	A IN.	B FT.	B IN.	C FT.	C IN.	D FT.	D IN.	E FT.	E IN.	SER. INCR. FT.	SER. INCR. IN.	WEIGHT (LBS.)
SPAN 1B – LOWER DECK SLAB – EPOXY COATED BARS																	
1BLES 401	24	26	3	STR													421
1BLES402	2	22	0	STR													29
1BLES403	4	4	0	STR													11
1BLES404	16	4	10	109	1	6	0	8									52
																TOTAL WEIGHT =	513
SPAN 1 – LOWER DECK SLAB – EPOXY COATED BARS																	
1LES 401	856	30	0	STR													17,154
1LES402	210	18	6	STR													2595
1LES403	132	5	6	STR													485
1LES404	152	26	2	STR													2657
1LES405	132	28	3	STR													2491
1LES406	144	7	3	150	1	3	0	8	1	4	1	10	1	7			697
1LES407	4	10	5	STR													28
1LES408	116	2	8	105	1	1	0	8									207
1LES409	116	5	5	126	1	1	0	8	3	10							420
1LES410	192	8	0	STR													1026
1LES 411	20	3	6	STR													47
1LES412	20	16	0	STR													214
1LES413	130	3	2	109	0	8	0	8									275
1LES414	164	5	4	109	0	11	1	6									584
1LES415	16	3	10	STR													41
																TOTAL WEIGHT =	28,921
SPAN 2 – LOWER DECK SLAB – EPOXY COATED BARS																	
2LES 401	1070	30	0	STR													21,443
2LES402	210	26	9	STR													3752
2LES403	165	5	6	STR													606
2LES404	185	26	2	STR													3234
2LES405	165	28	3	STR													3114
2LES406	180	7	3	150	1	3	0	8	1	4	1	10	1	7			872
2LES407	4	18	2	STR													49
2LES408	116	2	8	105	1	1	0	8									207
2LES409	116	5	7	126	1	1	0	8	4	0							433
2LES410	240	8	0	STR													1283
2LES 411	20	3	6	STR													47
2LES412	20	16	0	STR													214
2LES413	170	3	2	109	0	8	0	8									360
2LES414	200	5	4	109	0	11	1	6									713
2LES415	16	4	0	STR													43
																TOTAL WEIGHT =	36,370
SPAN 3 – LOWER DECK SLAB – EPOXY COATED BARS																	
3LES 401	1332	30	0	STR													26,693
3LES402	218	15	6	STR													2257
3LES403	187	6	6	STR													812
3LES404	197	26	2	STR													3443
3LES405	187	29	3	STR													3654
3LES406	204	7	3	150	1	3	0	8	1	4	1	10	1	7			988
3LES407	4	11	1	STR													30
3LES408	58	2	8	105	1	1	0	8									103
3LES409	58	5	7	126	1	1	0	8	4	0							216
3LES410	272	8	0	STR													1454
3LES 411	10	3	6	STR													23
3LES412	10	16	0	STR													107
3LES413	176	3	2	109	0	8	0	8									372
3LES414	214	5	4	109	0	11	1	6									762
3LES415	8	4	0	STR													21
																TOTAL WEIGHT =	40,935
PIER 3 – LOWER DECK SLAB – EPOXY COATED BARS																	
P3LES 401	314	24	3	STR													5086
P3LES402	72	30	0	STR													1443
P3LES403	36	21	6	STR													517
P3LES404	36	3	10	109	1	0	0	8									92
P3LES405	3	21	0	STR													42
P3LES406	4	16	0	STR													43
P3LES407	51	4	10	155	1	0	1	0	1	2							165
P3LES408	22	3	10	144	1	1	0	6	1	1							56
																TOTAL WEIGHT =	7444

BAR SCHEDULE

MARK	NUMBER REQ'D	LENGTH FT.	LENGTH IN.	TYPE	A FT.	A IN.	B FT.	B IN.	C FT.	C IN.	D FT.	D IN.	E FT.	E IN.	SER. INCR. FT.	SER. INCR. IN.	WEIGHT (LBS.)
PIER 4 – LOWER DECK SLAB – EPOXY COATED BARS																	
P4LES 401	314	24	3	STR													5086
P4LES402	72	30	0	STR													1443
P4LES403	36	21	6	STR													517
P4LES404	36	3	10	109	1	0	0	8									92
P4LES405	3	21	0	STR													42
P4LES406	4	16	0	STR													43
P4LES407	51	4	10	155	1	0	1	0	1	2							165
P4LES408	22	3	10	144	1	1	0	6	1	1							56
																TOTAL WEIGHT =	7444
SPAN 5 – LOWER DECK SLAB – EPOXY COATED BARS																	
5LES 401	1110	30	0	STR													22,244
5LES402	218	12	3	STR													1784
5LES403	154	6	6	STR													669
5LES404	164	26	2	STR													2867
5LES405	154	29	3	STR													3009
5LES406	168	7	3	150	1	3	0	8	1	4	1	10	1	7			814
5LES407	4	7	9	STR													21
5LES408	58	2	8	105	1	1	0	8									103
5LES409	58	5	7	126	1	1	0	8	4	0							216
5LES410	224	8	0	STR													1197
5LES 411	10	3	6	STR													23
5LES412	10	16	0	STR													107
5LES413	146	3	2	109	0	8	0	8									309
5LES414	178	5	4	109	0	11	1	6									634
5LES415	8	4	0	STR													21
																TOTAL WEIGHT =	34,018
SPAN 6 – LOWER DECK SLAB – EPOXY COATED BARS																	
6LES 401	1070	30	0	STR													21,443
6LES402	210	16	6	STR													2315
6LES403	154	5	6	STR													566
6LES404	174	26	2	STR													3041
6LES405	154	28	3	STR													2906
6LES406	168	7	3	150	1	3	0	8	1	4	1	10	1	7			814
6LES407	4	7	9	STR													21
6LES408	116	2	8	105	1	1	0	8									207
6LES409	116	5	7	126	1	1	0	8	4	0							433
6LES410	224	8	0	STR													1197
6LES 411	20	3	6	STR													47
6LES412	20	16	0	STR													214
6LES413	150	3	2	109	0	8	0	8									317
6LES414	188	5	4	109	0	11	1	6									670
6LES415	16	4	0	STR													43
																TOTAL WEIGHT =	34,234
SPAN 7 – LOWER DECK SLAB – EPOXY COATED BARS																	
7LES 401	1070	30	0	STR													21,443
7LES402	210	16	6	STR													2315
7LES403	154	5	6	STR													566
7LES404	174	26	2	STR													3041
7LES405	154	28	3	STR													2906
7LES406	168	7	3	150	1	3	0	8	1	4	1	10	1	7			814
7LES407	4	7	9	STR													21
7LES408	116	2	8	105	1	1	0	8									207
7LES409	116	5	7	126	1	1	0	8	4	0							433
7LES410	224	8	0	STR													1197
7LES 411	20	3	6	STR													47
7LES412	20	16	0	STR													214
7LES413	150	3	2	109	0	8	0	8									317
7LES414	188	5	4	109	0	11	1	6									670
7LES415	16	4	0	STR													43
																TOTAL WEIGHT =	34,234
SPAN 8 – LOWER DECK SLAB – EPOXY COATED BARS																	
8LES 401	1070	30	0	STR													21,443
8LES402	210	16	6	STR													2315
8LES403	154	5	6	STR													566
8LES404	174	26	2	STR													3041
8LES405	154	28	3	STR													2906
8LES406	168	7	3	150	1	3	0	8	1	4	1	10	1	7			814
8LES407	4	7	9	STR													21

BAR BENDING DIAGRAMS

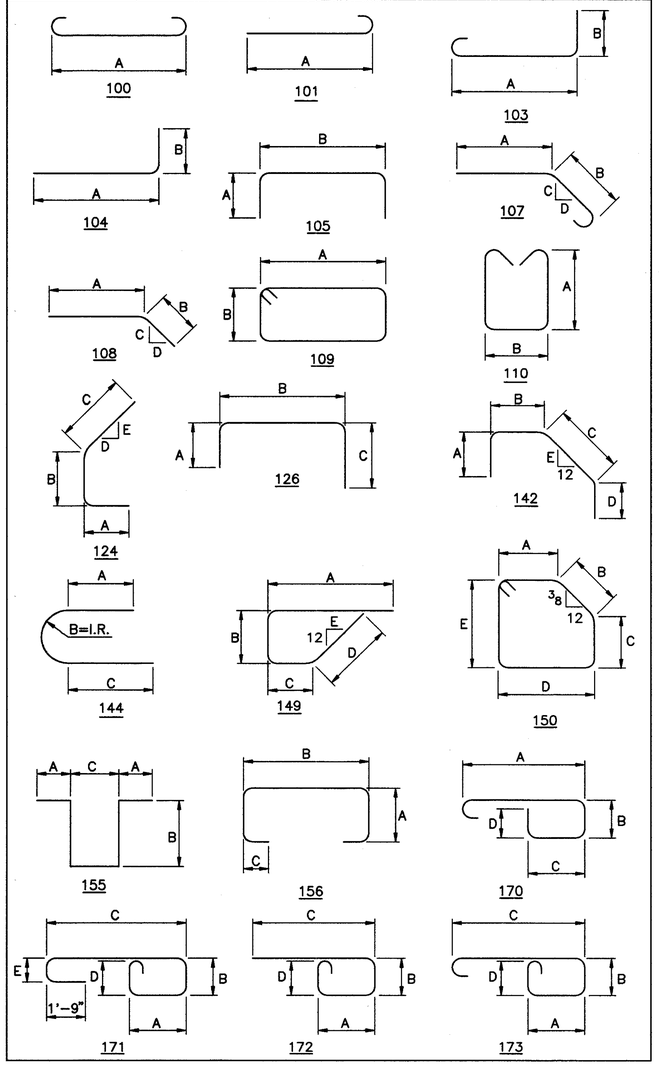

REINFORCING STEEL SAMPLES

REFER TO CMS SECTIONS 106.03, 700, 709.00, AND 709.01. SUFFICIENT ADDITIONAL REINFORCING STEEL SHALL BE PROVIDED FOR SAMPLING. RANDOM SAMPLES SHALL BE REPLACED IN THE STRUCTURES BY THE ADDITIONAL STEEL, SPLICED IN ACCORDANCE WITH 509.08

COUNTY BRIDGE NO. 84

HOWARD NEEDLES TAMMEN & BERGENDOFF
ARCHITECTS ENGINEERS PLANNERS
HNTB

REINFORCEMENT SCHEDULE
LOWER DECK SLABS
BR. NO. CUY – 6 – 1499
REHABILITATION OF
VETERANS MEMORIAL BRIDGE
(U.S. 6, 20, 42 & S.R. 3 OVER CUYAHOGA RIVER)

CLEVELAND CUYAHOGA COUNTY OHIO

DRAWN B.E.B.	TRACED J.L.V.	CHECKED J.L.V.	REVIEWED C.A.B.	REVISED
DATE 4/20/94	DATE 4/21/94	DATE 4/22/94	DATE 5/01/94	SHEET 258/270

\11646\CONCRETE\RSLDS1.DWG

FHWA REGION	STATE	PROJECT	
5	OHIO		

394/412

CUYAHOGA COUNTY
CUY – 6 – 14.99

BAR SCHEDULE

MARK	NUMBER REQ'D	LENGTH FT.	LENGTH IN.	TYPE	A FT.	A IN.	B FT.	B IN.	C FT.	C IN.	D FT.	D IN.	E FT.	E IN.	SER. INCR. FT.	SER. INCR. IN.	WEIGHT (LBS.)
SPAN 8 – LOWER DECK SLAB – EPOXY COATED BARS (CONTINUED)																	
8LES408	116	2	8	105	1	1	0	8									207
8LES409	116	5	7	126	1	1	0	8	4	0							433
8LES410	224	8	0	STR													1197
8LES 411	20	3	6	STR													47
8LES412	20	16	0	STR													214
8LES413	150	3	2	109	0	8	0	8									317
8LES414	188	5	4	109	0	11	1	6									670
8LES415	16	4	0	STR													43
																TOTAL WEIGHT =	34,234
SPAN 9 – LOWER DECK SLAB – EPOXY COATED BARS																	
9LES 401	856	30	0	STR													17,154
9LES402	210	19	0	STR													2665
9LES403	132	5	6	STR													485
9LES404	152	26	2	STR													2657
9LES405	132	28	3	STR													2491
9LES406	144	7	3	150	1	3	0	8	1	4	1	10	1	7			697
9LES407	4	10	5	STR													28
9LES408	116	2	8	105	1	1	0	8									207
9LES409	116	5	7	126	1	1	0	8	4	0							433
9LES410	192	8	0	STR													1026
9LES 411	20	3	6	STR													47
9LES412	20	16	0	STR													214
9LES413	130	3	2	109	0	8	0	8									275
9LES414	164	5	4	109	0	11	1	6									584
9LES415	16	4	0	STR													43
																TOTAL WEIGHT =	29,006
SPAN 10 – LOWER DECK SLAB – EPOXY COATED BARS																	
10LES 401	856	30	0	STR													17,154
10LES402	210	8	9	STR													1227
10LES403	121	5	6	STR													445
10LES404	141	26	2	STR													2465
10LES405	121	28	3	STR													2283
10LES406	132	7	3	150	1	3	0	8	1	4	1	10	1	7			639
10LES408	116	2	8	105	1	1	0	8									207
10LES409	116	5	5	126	1	1	0	8	3	10							420
10LES410	176	8	0	STR													941
10LES 411	20	3	6	STR													47
10LES412	20	16	0	STR													214
10LES413	120	3	2	109	0	8	0	8									254
10LES414	152	5	4	109	0	11	1	6									542
10LES415	16	4	0	STR													43
																TOTAL WEIGHT =	26,881
SPAN 11 – LOWER DECK SLAB – EPOXY COATED BARS																	
11LES 401	420	30	0	STR													8417
11LES402	96	29	0	STR													1860
11LES403	58	2	8	105	1	1	0	8									103
11LES404	58	5	5	126	1	1	0	8	3	10							210
11LES405	76	26	2	STR													1328
11LES406	1 SER.	26	5	STR													
	OF 5	27	2												2	1/4	89
11LES407	1 SER.	26	4	STR													
	OF 6	27	3												2	1/4	107
11LES408	1 SER.	27	6	STR													
	OF 5	28	4												2	1/2	93
11LES409	1 SER.	27	5	STR													
	OF 6	28	5												2	3/8	112
11LES410	90	7	1	150	1	3	0	8	1	2	1	10	1	7			426
11LES 411	12	18	0	STR													144
11LES412	112	5	4	109	0	11	1	6									399
11LES413	128	8	2	STR													698
11LES414	3	12	0	STR													24
11LES415	2	16	0	STR													21
11LES416	7	7	3	STR													34
11LES417	18	7	10	STR													94
11LES418	26	5	6	STR													96
11LES419	62	5	8	STR													235
11LES420	2	5	10	STR													8
11LES 421	2	6	0	STR													8
11LES422	10	3	6	STR													23

BAR SCHEDULE

MARK	NUMBER REQ'D	LENGTH FT.	LENGTH IN.	TYPE	A FT.	A IN.	B FT.	B IN.	C FT.	C IN.	D FT.	D IN.	E FT.	E IN.	SER. INCR. FT.	SER. INCR. IN.	WEIGHT (LBS.)
SPAN 11 – LOWER DECK SLAB – EPOXY COATED BARS (CONTINUED)																	
11LES423	2	26	6	STR													35
11LES424	2	30	0	STR													40
11LES425	4	25	0	STR													67
11LES426	2	15	0	STR													20
11LES427	96	11	0	STR													705
11LES428	1 SER.	6	3	STR													
	OF 5	6	10												1	3/4	22
11LES429	1 SER.	6	2	STR													
	OF 6	6	11												1	3/4	26
11LES430	1 SER.	7	1	STR													
	OF 5	7	9												2		25
11LES 431	1 SER.	7	0	STR													
	OF 6	7	10												2		30
11LES432	15	30	0	STR													301
11LES433	97	3	2	109	0	8	0	8									205
11LES434	110	28	6	STR													2094
11LES435	10	26	2	STR													175
11LES436	4	23	9	STR													63
11LES437	2	13	9	STR													18
11LES438	2	30	0	STR													40
11LES439	4	21	6	STR													57
11LES440	2	11	6	STR													15
11LES 441	2	28	0	STR													37
11LES442	4	18	0	STR													48
11LES443	8	4	0	STR													21
11LES444	2	6	2	STR													8
11LES445	2	29	0	STR													39
11LES446	1 SER.	28	5	STR													
	OF 5	29	1												2		96
11LES447	1 SER.	28	4	STR													
	OF 6	29	2												2		115
11LES448	1 SER.	29	4	STR													
	OF 5	29	11												1	3/4	99
11LES449	1 SER.	29	3	STR													
	OF 6	30	0												1	3/4	119
11LES450	1 SER.	30	2	STR													
	OF 5	30	10												2		102
11LES 451	1 SER.	30	1	STR													
	OF 6	30	11												2		122
11LES452	1 SER.	31	0	STR													
	OF 5	31	8												2		105
11LES453	1 SER.	30	11	STR													
	OF 6	31	9												2		126
11LES454	1 SER.	31	10	STR													
	OF 5	32	6												2		107
11LES455	1 SER.	31	9	STR													
	OF 6	32	7												2		129
11LES456	1 SER.	32	9	STR													
	OF 5	33	5												2		110
11LES457	1 SER.	32	8	STR													
	OF 6	33	6												2		133
11LES458	1 SER.	33	7	STR													
	OF 5	34	3												2		113
11LES459	1 SER.	33	6	STR													
	OF 6	34	4												2		136
11LES460	15	31	0	STR													311
																TOTAL WEIGHT =	20,543
SPAN 12 – LOWER DECK SLAB – EPOXY COATED BARS																	
12LES 401	760	30	0	STR													15,230
12LES402	114	6	5	STR													489
12LES403	16	8	4	STR													89
12LES404	16	18	10	STR													201
12LES405	114	23	3	STR													1771
12LES406	16	15	2	STR													162
12LES407	16	6	2	STR													66
12LES408	80	5	11	STR													316
12LES409	32	8	5	STR													180
12LES410	32	19	0	STR													406
12LES 411	16	8	8	STR													93
12LES412	16	13	9	STR													147
12LES413	110	5	8	STR													416

BAR BENDING DIAGRAMS

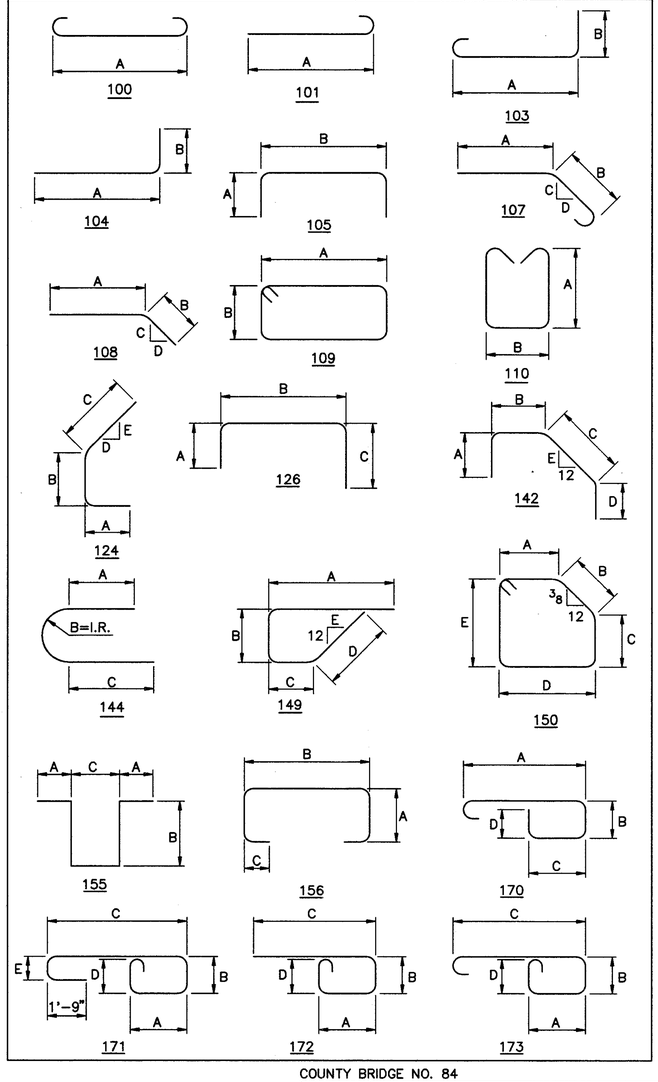

REINFORCING STEEL SAMPLES

REFER TO CMS SECTIONS 106.03, 700, 709.00, AND 709.01. SUFFICIENT ADDITIONAL REINFORCING STEEL SHALL BE PROVIDED FOR SAMPLING. RANDOM SAMPLES SHALL BE REPLACED IN THE STRUCTURES BY THE ADDITIONAL STEEL, SPLICED IN ACCORDANCE WITH 509.08

COUNTY BRIDGE NO. 84

HOWARD NEEDLES TAMMEN & BERGENDOFF
ARCHITECTS ENGINEERS PLANNERS
HNTB

REINFORCEMENT SCHEDULE
LOWER DECK SLABS
BR. NO. CUY – 6 – 1499
REHABILITATION OF
VETERANS MEMORIAL BRIDGE
(U.S. 6, 20, 42 & S.R. 3 OVER CUYAHOGA RIVER)

CLEVELAND CUYAHOGA COUNTY OHIO

DRAWN B.E.B.	TRACED J.L.V.	CHECKED J.L.V.	REVIEWED C.A.B.	REVISED
DATE 4/20/94	DATE 4/21/94	DATE 4/22/94	DATE 6/01/94	SHEET 259/270

\11646\CONCRETE\RSLDS1.DWG

FHWA REGION	STATE	PROJECT	
5	OHIO		

396/412

CUYAHOGA COUNTY
CUY – 6 – 14.99

BAR SCHEDULE

MARK	NUMBER REQ'D	LENGTH FT.	LENGTH IN.	TYPE	A FT.	A IN.	B FT.	B IN.	C FT.	C IN.	D FT.	D IN.	E FT.	E IN.	SER. INCR. FT.	SER. INCR. IN.	WEIGHT (LBS.)
SPAN 1A – UPPER DECK SLAB – EPOXY COATED BARS																	
1AUES 401	304	30	0	STR													6092
1AUES402	17	8	5	101	7	11											96
1AUES403	32	9	8	101	9	2											207
1AUES404	103	9	11	101	9	5											682
1AUES405	1 SER.	21	4	101	20	10											
	OF 65	16	3		15	9										1	816
1AUES406	1 SER.	16	3	101	15	9											
	OF 48	13	3		12	9										9/16	473
1AUES407	1 SER.	13	3	101	12	9											
	OF 39	11	9		11	3										3/8	326
1AUES408	11	22	5	STR													165
1AUES409	1 SER.	10	4	126	1	9	0	6	8	3							
	OF 45	7	7						5	6						3/4	269
1AUES410	1 SER.	13	9	STR													
	OF 38	10	10													15/16	312
1AUES 411	141	20	5	STR													1923
1AUES412	1 SER.	7	7	126	1	9	0	6	5	6							
	OF 38	4	8						2	7						15/16	155
1AUES413	53	14	2	126	1	9	0	5	12	2							502
1AUES414	256	12	10	172	0	8	1	0	10	0	0	11					2195
1AUES415	56	16	9	126	3	0	0	6	13	5							627
1AUES416	19	22	3	126	5	9	0	6	16	2							282
1AUES417	11	20	4	STR													149
1AUES418	1 SER.	12	9	STR													
	OF 19	11	2													1	152
1AUES419	13	17	10	STR													155
1AUES420	1 SER.	6	7	126	1	9	0	6	4	6							
	OF 19	5	0						2	11						1	74
1AUES 421	1 SER.	17	9	STR													
	OF 26	16	6													5/8	297
1AUES422	1 SER.	11	7	126	1	9	0	6	9	6							
	OF 26	10	4						8	3						5/8	190
1AUES423	1 SER.	16	6	STR													
	OF 45	13	9													3/4	455
1AUES425	16	2	4	104	1	9	0	8									25
1AUES450	16	5	3	STR													56
1AUES 501	172	30	0	STR													5382
1AUES502	51	10	9	STR													572
1AUES503	1	24	8	STR													26
1AUES504	1	12	1	STR													13
1AUES505	1 SER.	33	11	STR													
	OF 7	5	4												4	9 1/4	143
1AUES506	1 SER.	27	8	STR													
	OF 5	7	0												5	2	90
1AUES507	1 SER.	27	6	STR													
	OF 4	6	6												7	0	71
1AUES508	10	6	5	STR													67
1AUES509	10	13	0	STR													136
1AUES525	182	3	11	105	1	2	1	10									743
1AUES 601	449	30	0	STR													20,232
1AUES602	171	34	2	101	33	6											8775
1AUES603	172	30	0	STR													7750
1AUES604	9	9	2	STR													124
1AUES605	18	10	0	STR													270
1AUES606	59	10	4	STR													916
1AUES607	1 SER.	21	9	STR													
	OF 36	16	8												1	3/4	1039
1AUES608	1 SER.	16	8	STR													
	OF 27	13	11												1	1/4	620
1AUES609	1 SER.	13	11	STR													
	OF 23	12	2													1	451
1AUES610	1	4	5	101	3	9											7
1AUES 611	1 SER.	34	5	101	33	9											
	OF 8	7	7		6	11									3	10	252
1AUES612	1 SER.	26	2	STR													
	OF 5	7	0												4	9 1/2	125
1AUES613	1 SER.	22	0	STR													
	OF 4	3	9												6	1	77
1AUES614	1	24	3	STR													36
1AUES615	1	26	2	STR													39
1AUES616	1	18	4	STR													28
1AUES617	1	9	0	STR													14
1AUES618	51	13	9	STR													1053

BAR SCHEDULE

MARK	NUMBER REQ'D	LENGTH FT.	LENGTH IN.	TYPE	A FT.	A IN.	B FT.	B IN.	C FT.	C IN.	D FT.	D IN.	E FT.	E IN.	SER. INCR. FT.	SER. INCR. IN.	WEIGHT (LBS.)
SPAN 1A – UPPER DECK SLAB – EPOXY COATED BARS (CONTINUED)																	
1AUES619	1	24	8	STR													37
1AUES620	1	12	1	STR													18
1AUES 621	58	22	10	STR													1989
1AUES622	1 SER.	33	11	STR													
	OF 7	5	4												4	9 1/4	206
1AUES623	1 SER.	27	8	STR													
	OF 5	7	0												5	2	130
1AUES624	1 SER.	27	6	STR													
	OF 4	6	6												7	0	102
1AUES625	10	6	5	STR													96
1AUES626	10	13	0	STR													195
1AUES627	22	14	1	172	0	8	1	8	10	0	1	7					465
1AUES628	11	16	8	126	1	9	0	5	14	10							275
1AUES629	2 SER.	14	1	172	0	8	1	8	10	0	1	7					
	OF 13	12	9								0	11			1	5/16	524
1AUES630	13	14	9	126	1	9	0	6	12	10							288
1AUES 631	11	15	5	126	2	2	0	5	13	2							255
1AUES632	13	13	1	126	2	3	0	5	10	9							255
1AUES650	4	10	1	100	8	9											61
1AUES 701	228	11	6	101	10	8											5359
1AUES702	505	30	0	STR													30,967
1AUES703	165	18	6	STR													6239
1AUES704	1	24	3	STR													50
1AUES705	1	16	8	STR													34
1AUES706	1	32	2	STR													66
1AUES707	1	18	10	STR													38
1AUES708	1 SER.	33	4	STR													
	OF 8	6	10												3	9 1/2	328
1AUES709	1 SER.	31	0	STR													
	OF 5	11	10												4	9 1/2	219
1AUES710	1 SER.	29	4	STR													
	OF 4	11	3												6	0 1/4	166
1AUES 711	1	11	2	STR													23
1AUES712	1	7	10	STR													16
1AUES750	4	8	9	STR													72
															TOTAL WEIGHT =		114,199
SPAN 1B – UPPER DECK SLAB – EPOXY COATED BARS																	
1BUES 401	370	30	0	STR													7415
1BUES402	212	10	6	101	10	0											1487
1BUES403	20	11	9	101	11	3											157
1BUES404	64	11	3	101	10	9											481
1BUES405	74	13	2	101	12	8											651
1BUES406	22	22	5	STR													329
1BUES407	272	9	1	172	0	8	1	0	6	3	0	11					1650
1BUES408	2 SER.	14	5	126	1	9	0	5	14	6							
	OF 136	3	9						1	9						1	1650
1BUES409	26	19	2	STR													333
1BUES410	58	6	3	STR													242
1BUES 411	58	11	2	171	0	8	1	0	6	3	0	11	0	6			433
1BUES412	2 SER.	19	0	STR													
	OF 136	6	3												1	1/8	2294
1BUES425	32	2	4	104	1	9	0	8									51
1BUES 501	142	30	0	STR													4443
1BUES502	22	7	3	STR													166
1BUES503	2 SER.	27	3	STR													
	OF 6	6	9												4	1 1/4	213
1BUES504	2 SER.	28	11	STR													
	OF 7	3	11												4	2	240
1BUES505	2 SER.	42	7	STR													
	OF 10	5	1												4	2	497
1BUES506	10	6	5	STR													67
1BUES525	52	3	11	105	1	2	1	10									212
1BUES 601	572	30	0	STR													25,774
1BUES602	162	24	6	STR													5961
1BUES603	218	30	0	STR													9823
1BUES604	122	10	6	STR													1924
1BUES605	60	12	5	STR													1119
1BUES606	36	11	9	STR													635
1BUES607	1	5	11	101	5	3											9
1BUES608	1	7	7	STR													11
1BUES609	1	19	9	STR													30

BAR BENDING DIAGRAMS

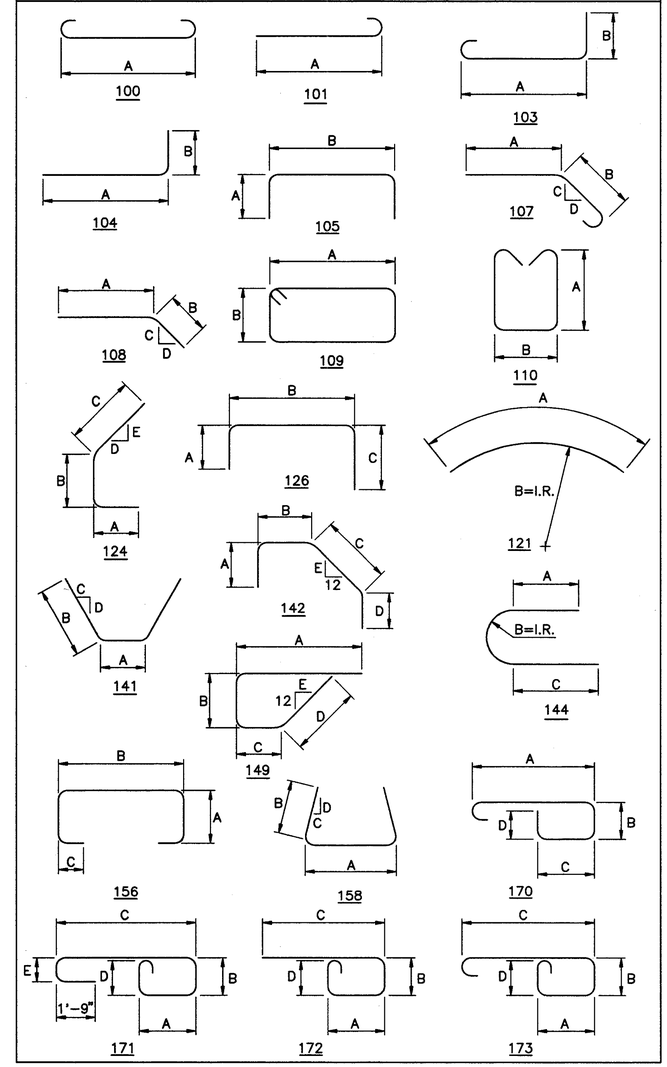

REINFORCING STEEL SAMPLES

REFER TO CMS SECTIONS 106.03, 700, 709.00, AND 709.01. SUFFICIENT ADDITIONAL REINFORCING STEEL SHALL BE PROVIDED FOR SAMPLING. RANDOM SAMPLES SHALL BE REPLACED IN THE STRUCTURES BY THE ADDITIONAL STEEL, SPLICED IN ACCORDANCE WITH 509.08

COUNTY BRIDGE NO. 84

HOWARD NEEDLES TAMMEN & BERGENDOFF
ARCHITECTS ENGINEERS PLANNERS
HNTB

REINFORCEMENT SCHEDULE
UPPER DECK SLABS
BR. NO. CUY – 6 – 1499
REHABILITATION OF
VETERANS MEMORIAL BRIDGE
(U.S. 6, 20, 42 & S.R. 3 OVER CUYAHOGA RIVER)
CLEVELAND CUYAHOGA COUNTY OHIO

DRAWN J.L.V.	TRACED J.L.V.	CHECKED B.E.B.	REVIEWED C.A.B.	REVISED
DATE 5/13/94	DATE 5/13/94	DATE 5/25/94	DATE 6/01/94	SHEET 261/270

\11646\CONCRETE\RSUDS1.DWG

FHWA REGION	STATE	PROJECT	
5	OHIO		

397/412

CUYAHOGA COUNTY
CUY – 6 – 14.99

BAR SCHEDULE

MARK	NUMBER REQ'D	LENGTH FT.	LENGTH IN.	TYPE	A FT.	A IN.	B FT.	B IN.	C FT.	C IN.	D FT.	D IN.	E FT.	E IN.	SER. INCR. FT.	SER. INCR. IN.	WEIGHT (LBS.)
SPAN 1B – UPPER DECK SLAB – EPOXY COATED BARS (CONTINUED)																	
1BUES610	10	6	5	STR													96
1BUES 611	56	22	10	STR													1921
1BUES612	22	11	3	STR													372
1BUES613	2 SER.	28	11	STR													
	OF 7	3	11												4	2	345
1BUES614	2 SER.	42	7	STR													
	OF 10	5	1												4	2	716
1BUES615	12	18	9	101	18	1											338
1BUES616	22	14	2	172	0	8	1	8	10	0	1	7					468
1BUES617	22	16	8	126	1	9	0	5	14	10							551
1BUES618	2 SER.	14	2	172	0	8	1	8	10	0	1	7					
	OF 13	12	10				0	10			0	11			1	5/16	527
1BUES619	26	16	11	126	3	0	0	5	12	10							661
1BUES 701	394	11	6	101	10	8											9261
1BUES702	648	30	0	STR													29,199
1BUES703	162	17	11	STR													4360
1BUES704	12	25	3	STR													455
1BUES705	1	5	3	STR													8
1BUES706	1	15	0	STR													23
1BUES707	1	27	0	STR													41
1BUES708	2 SER.	27	3	STR													
	OF 6	6	9												4	1 1/4	417
																TOTAL WEIGHT =	118,056
SPAN 1 – UPPER DECK SLAB – EPOXY COATED BARS																	
1UES 401	402	30	0	STR													8056
1UES402	402	11	11	101	11	5											3200
1UES450	8	7	6	STR													40
1UES 501	88	30	0	STR													2754
1UES502	24	10	4	101	9	9											259
1UES503	10	18	0	STR													188
1UES504	104	3	11	105	1	2	1	10									425
1UES 601	510	30	0	STR													22,981
1UES602	170	34	6	STR													8809
1UES603	236	30	0	STR													10,634
1UES604	236	12	6	STR													4431
1UES605	418	10	9	170	6	2	1	0	2	6	0	11					6749
1UES606	210	6	2	STR													1945
1UES650	4	7	6	STR													45
1UES 701	340	11	6	101	10	8											7992
1UES702	680	30	0	STR													41,698
1UES703	170	28	5	STR													9874
1UES1050	4	15	10	126	1	0	1	0	14	6							273
																TOTAL WEIGHT =	130,353
SPAN 2 – UPPER DECK SLAB – EPOXY COATED BARS																	
2UES 401	498	30	0	STR													9980
2UES402	458	11	11	101	11	5											3646
2UES403	40	12	2	101	11	8											325
2UES404	16	2	4	104	1	9	0	8									25
2UES450	8	7	6	STR													40
2UES 501	110	30	0	STR													3442
2UES502	24	14	5	101	13	10											361
2UES503	10	25	4	STR													264
2UES504	156	3	11	105	1	2	1	10									637
2UES 601	850	30	0	STR													38,301
2UES602	170	16	2	STR													4128
2UES603	290	30	0	STR													13,067
2UES604	262	12	6	STR													4919
2UES605	380	10	9	170	6	2	1	0	2	6	0	11					6136
2UES606	268	6	2	STR													2482
2UES607	152	10	6	170	6	2	1	0	2	3	0	11					2397
2UES608	28	12	9	STR													536
2UES650	4	7	6	STR													45

BAR SCHEDULE

MARK	NUMBER REQ'D	LENGTH FT.	LENGTH IN.	TYPE	A FT.	A IN.	B FT.	B IN.	C FT.	C IN.	D FT.	D IN.	E FT.	E IN.	SER. INCR. FT.	SER. INCR. IN.	WEIGHT (LBS.)
SPAN 2 – UPPER DECK SLAB – EPOXY COATED BARS (CONTINUED)																	
2UES 701	340	11	6	101	10	8											7992
2UES702	1020	30	0	STR													62,546
2UES703	170	13	5	STR													4662
2UES1050	4	15	10	126	1	0	1	0	14	6							273
																TOTAL WEIGHT =	166,204
SPAN 3 – UPPER DECK SLAB – EPOXY COATED BARS																	
3UES 401	554	30	0	STR													11,102
3UES402	138	14	0	101	13	6											1291
3UES403	96	15	8	101	15	2											1005
3UES404	128	17	5	101	16	11											1489
3UES405	192	18	6	101	18	0											2373
3UES450	8	7	6	STR													40
3UES 501	132	30	0	STR													4130
3UES502	24	9	3	101	8	8											232
3UES503	10	15	3	STR													159
3UES504	234	3	11	105	1	2	1	10									956
3UES 601	1108	30	0	STR													49,926
3UES602	198	13	6	101	12	10											4015
3UES603	316	30	0	STR													14,239
3UES604	82	14	7	STR													1796
3UES605	512	10	6	170	6	2	1	0	2	3	0	11					8075
3UES606	294	6	2	STR													2723
3UES607	2 SER.	11	1	170	6	2	1	0	2	10	0	11					
	OF 35	10	6						2	3						3/16	1135
3UES608	2	23	6	STR													71
3UES609	54	16	2	STR													1311
3UES610	72	18	0	STR													1947
3UES 611	108	19	0	STR													3082
3UES612	2	9	0	STR													27
3UES613	2	28	0	STR													84
3UES614	2	16	0	STR													48
3UES615	2	7	6	STR													23
3UES616	2	25	6	STR													77
3UES617	2	19	6	STR													59
3UES618	2	11	0	STR													33
3UES619	2	28	0	STR													84
3UES620	2	16	0	STR													48
3UES 621	2	31	0	STR													93
3UES622	2	16	6	STR													50
3UES650	20	7	6	STR													225
3UES 701	174	11	6	101	10	8											4090
3UES702	1094	30	0	STR													67,084
3UES703	196	30	2	STR													12,085
3UES704	2	27	0	STR													110
3UES705	2	18	0	STR													74
3UES706	2	32	0	STR													131
3UES707	2	23	6	STR													96
3UES708	2	14	6	STR													59
3UES709	2	33	6	STR													137
3UES710	2	25	0	STR													102
3UES 711	2	14	9	STR													60
3UES712	2	28	5	STR													116
3UES713	2	16	3	STR													66
3UES714	2	27	3	STR													111
3UES715	2	33	0	STR													135
3UES1050	4	15	10	126	1	0	1	0	14	6							273
																TOTAL WEIGHT =	196,677
PIER 3 – UPPER DECK SLAB – EPOXY COATED BARS																	
P3UES 401	70	30	0	STR													1403
P3UES402	70	21	9	101	21	3											1017
P3UES403	36	24	9	101	24	3											595
P3UES404	4	19	8	108	9	10	9	10	1		12						53
P3UES405	4	20	3	STR													54
P3UES406	2	20	10	STR													28
P3UES407	6	6	3	158	2	11	1	9	1		12						25

BAR BENDING DIAGRAMS

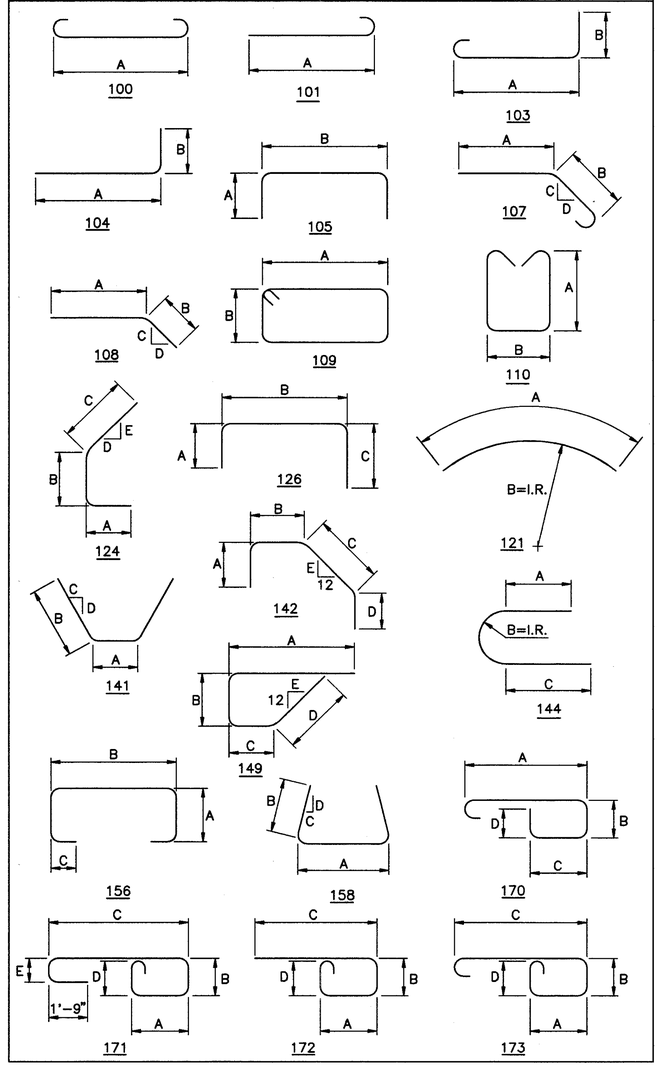

COUNTY BRIDGE NO. 84

REINFORCING STEEL SAMPLES

REFER TO CMS SECTIONS 106.03, 700, 709.00, AND 709.01. SUFFICIENT ADDITIONAL REINFORCING STEEL SHALL BE PROVIDED FOR SAMPLING. RANDOM SAMPLES SHALL BE REPLACED IN THE STRUCTURES BY THE ADDITIONAL STEEL, SPLICED IN ACCORDANCE WITH 509.08

HOWARD NEEDLES TAMMEN & BERGENDOFF
ARCHITECTS ENGINEERS PLANNERS
HNTB

REINFORCEMENT SCHEDULE
UPPER DECK SLABS
BR. NO. CUY – 6 – 1499
REHABILITATION OF
VETERANS MEMORIAL BRIDGE
(U.S. 6, 20, 42 & S.R. 3 OVER CUYAHOGA RIVER)
CLEVELAND CUYAHOGA COUNTY OHIO

DRAWN J.L.V.	TRACED J.L.V.	CHECKED B.E.B.	REVIEWED C.A.B.	REVISED
DATE 5/16/94	DATE 5/16/94	DATE 5/25/94	DATE 6/01/94	SHEET 262/270

\11646\CONCRETE\RSUDS1.DWG

FHWA REGION	STATE	PROJECT	
5	OHIO		

398
412

CUYAHOGA COUNTY
CUY – 6 – 14.99

BAR SCHEDULE

MARK	NUMBER REQ'D	LENGTH FT.	LENGTH IN.	TYPE	A FT.	A IN.	B FT.	B IN.	C FT.	C IN.	D FT.	D IN.	E FT.	E IN.	SER. INCR. FT.	SER. INCR. IN.	WEIGHT (LBS.)
PIER 3 – UPPER DECK SLAB – EPOXY COATED BARS (CONTINUED)																	
P3UES408	6	4	5	141	1	1	1	9	1		12						18
P3UES409	2	7	3	144	1	9	1	2½	1	9							10
P3UES410	2	7	4	105	1	9	4	0									10
P3UES 411	16	9	8	STR													103
P3UES 501	16	8	3	156	1	6	4	1	0	10							138
P3UES502	2 SER.	7	11	156	1	6	3	9	0	10							
	OF 6	6	10				2	8								2⅝	185
P3UES503	2 SER.	10	4	156	3	1	3	0	0	10							
	OF 7	7	0		2	4	1	2								6⅝	127
P3UES504	22	24	3	STR													556
P3UES505	4	16	8	STR													70
P3UES506	16	13	9	104	10	7	3	3									229
P3UES507	2	19	6	STR													41
P3UES508	20	4	9	142	0	10	1	2	1	6	1	6	12				99
P3UES509	16	5	4	STR													89
P3UES 601	364	14	5	101	13	9											7882
P3UES602	36	30	0	STR													1622
P3UES603	36	23	0	STR													1244
P3UES604	18	6	2	STR													167
P3UES605	80	10	6	170	6	2	1	0	2	3	0	11					1262
P3UES606	28	7	4	142	2	1	2	0	1	7	2	0	12				308
P3UES 701	364	14	9	STR													10,974
																TOTAL WEIGHT =	28,309
PIER 4 – UPPER DECK SLAB – EPOXY COATED BARS																	
P4UES 401	70	30	0	STR													1403
P4UES402	70	21	9	101	21	3											1017
P4UES403	36	24	9	101	24	3											595
P4UES404	4	19	8	108	9	10	9	10	1		12						53
P4UES405	4	20	3	STR													54
P4UES406	2	20	10	STR													28
P4UES407	6	6	3	158	2	11	1	9	1		12						25
P4UES408	6	4	5	141	1	1	1	9	1		12						18
P4UES409	2	7	3	144	1	9	1	2½	1	9							10
P4UES410	2	7	4	105	1	9	4	0									10
P4UES 411	16	9	8	STR													103
P4UES 501	16	8	3	156	1	6	4	1	0	10							138
P4UES502	2 SER.	7	11	156	1	6	3	9	0	10							
	OF 6	6	10				2	8							0	2⅝	185
P4UES503	2 SER.	10	4	156	3	1	3	0	0	10							
	OF 7	7	0		2	4	1	2							0	6⅝	127
P4UES504	22	24	3	STR													556
P4UES505	4	16	8	STR													70
P4UES506	16	13	9	104	10	7	3	3									229
P4UES507	2	19	6	STR													41
P4UES508	20	4	9	142	0	10	1	2	1	6	1	6	12				99
P4UES509	16	5	4	STR													89
P4UES 601	364	14	5	101	13	9											7882
P4UES602	36	30	0	STR													1622
P4UES603	36	23	0	STR													1244
P4UES604	18	6	2	STR													167
P4UES605	80	10	6	170	6	2	1	0	2	3	0	11					1262
P4UES606	28	7	4	142	2	1	2	0	1	7	2	0	12				308
P4UES 701	364	14	9	STR													10,974
																TOTAL WEIGHT =	28,309
SPAN 4 – UPPER DECK SLAB – EPOXY COATED BARS																	
4UES 401	1678	30	0	STR													33,627
4UES402	344	7	5	101	6	11											1704
4UES403	180	16	2	101	15	8											1944
4UES404	12	18	11	STR													152
4UES405	12	2	1	STR													17
4UES406	12	16	11	STR													136
4UES407	12	7	3	STR													58
4UES408	12	11	5	STR													92

BAR SCHEDULE

MARK	NUMBER REQ'D	LENGTH FT.	LENGTH IN.	TYPE	A FT.	A IN.	B FT.	B IN.	C FT.	C IN.	D FT.	D IN.	E FT.	E IN.	SER. INCR. FT.	SER. INCR. IN.	WEIGHT (LBS.)
SPAN 4 – UPPER DECK SLAB – EPOXY COATED BARS (CONTINUED)																	
4UES409	12	13	4	STR													107
4UES410	12	4	11	STR													39
4UES 411	12	15	1	STR													121
4UES412	4	20	7	STR													55
4UES413	24	23	2	STR													371
4UES414	112	30	0	STR													2244
4UES415	16	16	6	STR													176
4UES416	16	12	3	STR													131
4UES417	12	18	11	STR													152
4UES418	12	2	1	STR													17
4UES419	12	17	5	STR													140
4UES420	12	7	3	STR													58
4UES 421	12	12	1	STR													97
4UES422	12	13	4	STR													107
4UES423	12	5	9	STR													46
4UES424	12	15	1	STR													121
4UES425	4	19	4	STR													52
4UES426	24	23	2	STR													371
4UES427	1827	13	0	STR													15,866
4UES450	64	7	6	STR													321
4UES 501	892	37	8	STR													35,043
4UES502	1508	29	3	STR													46,006
4UES503	1963	30	0	STR													61,422
4UES504	356	9	4	STR													3466
4UES505	96	21	2	STR													2119
4UES506	32	20	3	104	19	0	1	4									676
4UES507	108	19	7	STR													2206
4UES508	16	19	3	STR													321
4UES509	68	18	9	STR													1330
4UES510	52	20	2	STR													1094
4UES 511	32	8	0	104	6	9	1	4									267
4UES512	108	7	3	STR													817
4UES513	16	7	0	STR													117
4UES514	68	6	6	STR													461
4UES515	52	7	11	STR													429
4UES516	16	18	11	STR													316
4UES517	16	2	1	STR													35
4UES518	16	16	11	STR													282
4UES519	16	7	3	STR													121
4UES520	16	11	5	STR													191
4UES 521	16	13	4	STR													223
4UES522	16	4	11	STR													82
4UES523	16	15	1	STR													252
4UES524	8	20	7	STR													172
4UES525	48	23	2	STR													1160
4UES526	748	7	10	156	1	4	4	2	1	4	0	9	0	9			6111
4UES527	48	9	11	101	9	4											496
4UES528	24	21	9	101	21	2											544
4UES529	210	13	0	STR													2847
4UES550	32	7	6	STR													250
4UES 601	886	33	2	STR													44,137
4UES602	1508	32	10	101	32	2											74,368
4UES603	28	20	4	100	19	0											855
4UES604	108	20	11	100	19	7											3393
4UES605	16	20	7	100	19	3											495
4UES606	60	20	1	100	18	9											1810
4UES607	52	21	6	100	20	2											1679
4UES608	28	10	2	101	9	6											428
4UES609	108	10	9	101	10	1											1744
4UES610	16	10	5	101	9	9											250
4UES 611	60	10	0	101	9	4											901
4UES612	52	11	4	101	10	8											885
4UES613	1790	10	6	170	6	2	1	0	2	3	0	11					28,230
4UES614	898	6	2	STR													8318
4UES615	1768	7	11	101	7	3											21,023
4UES650	32	8	10	100	7	6											425
																TOTAL WEIGHT =	416,119

BAR BENDING DIAGRAMS

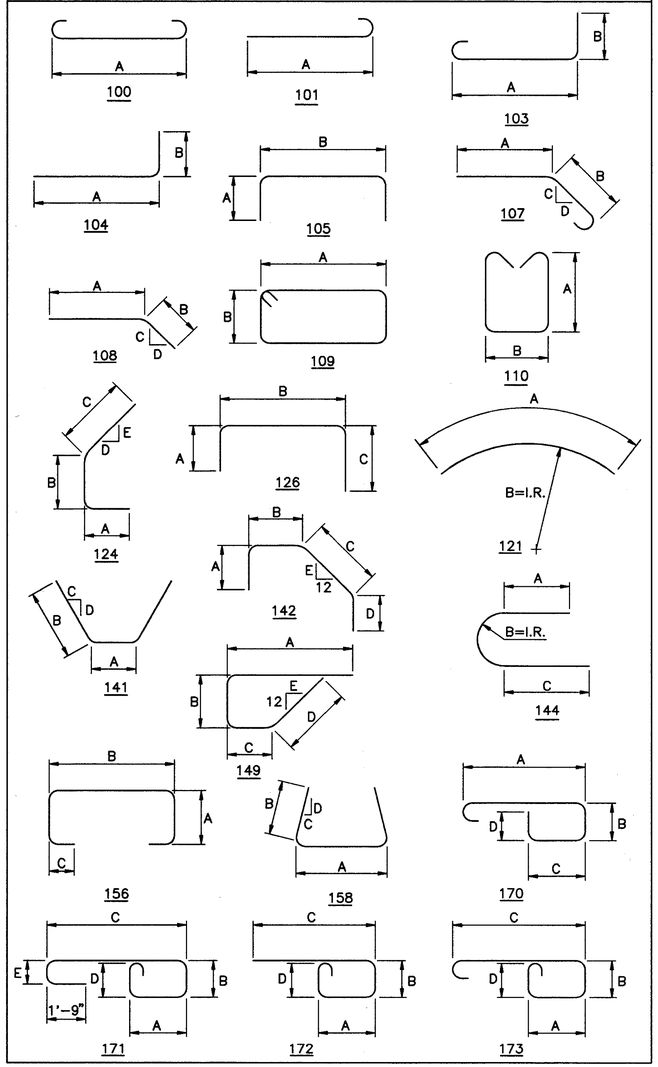

COUNTY BRIDGE NO. 84

REINFORCING STEEL SAMPLES

REFER TO CMS SECTIONS 106.03, 700, 709.00, AND 709.01. SUFFICIENT ADDITIONAL REINFORCING STEEL SHALL BE PROVIDED FOR SAMPLING. RANDOM SAMPLES SHALL BE REPLACED IN THE STRUCTURES BY THE ADDITIONAL STEEL, SPLICED IN ACCORDANCE WITH 509.08

HOWARD NEEDLES TAMMEN & BERGENDOFF
ARCHITECTS ENGINEERS PLANNERS
HNTB

REINFORCEMENT SCHEDULE
UPPER DECK SLABS
BR. NO. CUY – 6 – 1499
REHABILITATION OF
VETERANS MEMORIAL BRIDGE
(U.S. 6, 20, 42 & S.R. 3 OVER CUYAHOGA RIVER)
CLEVELAND CUYAHOGA COUNTY OHIO

DRAWN J.L.V.	TRACED J.L.V.	CHECKED B.E.B.	REVIEWED C.A.B.	REVISED
DATE 5/16/94	DATE 5/16/94	DATE 5/25/94	DATE 6/01/94	SHEET 263/270

\1646\CONCRETE\RSUDS1.DWG

FHWA REGION	STATE	PROJECT	
5	OHIO		

399/412

CUYAHOGA COUNTY
CUY – 6 – 14.99

BAR SCHEDULE

MARK	NUMBER REQ'D	LENGTH FT.	LENGTH IN.	TYPE	A FT.	A IN.	B FT.	B IN.	C FT.	C IN.	D FT.	D IN.	E FT.	E IN.	SER. INCR. FT.	SER. INCR. IN.	WEIGHT (LBS.)
SPAN 5 – UPPER DECK SLAB – EPOXY COATED BARS																	
5UES 401	454	30	0	STR													9098
5UES402	222	18	6	101	18	0											2743
5UES403	96	17	2	101	16	8											1101
5UES404	96	15	8	101	15	2											1005
5UES405	40	14	0	101	13	6											374
5UES450	8	7	6	STR													40
5UES 501	110	30	0	STR													3442
5UES502	24	10	3	101	9	8											257
5UES503	10	12	6	STR													130
5UES504	234	3	11	105	1	2	1	10									956
5UES 601	740	30	0	STR													33,344
5UES602	196	36	4	101	35	8											10696
5UES603	262	30	0	STR													11806
5UES604	126	19	0	STR													3596
5UES605	486	10	6	170	6	2	1	0	2	3	0	11					7665
5UES606	244	6	2	STR													2260
5UES607	2	16	10	STR													51
5UES608	2	8	6	STR													26
5UES609	54	17	8	STR													1433
5UES610	54	16	2	STR													1311
5UES 611	28	14	6	STR													610
5UES612	2	29	1	101	28	5											87
5UES613	2	17	9	STR													53
5UES614	2	28	4	STR													85
5UES615	2	18	9	STR													56
5UES616	2	6	4	STR													19
5UES617	2	28	0	STR													84
5UES618	2	20	0	STR													60
5UES619	2	10	0	STR													30
5UES620	2	27	0	STR													81
5UES650	4	7	6	STR													45
5UES 701	176	11	6	101	10	8											4137
5UES702	942	30	0	STR													57,763
5UES703	176	24	3	STR													8724
5UES704	2	28	5	STR													116
5UES705	2	24	9	STR													101
5UES706	2	27	7	STR													113
5UES707	2	15	0	STR													61
5UES708	2	30	10	STR													126
5UES709	2	20	10	STR													85
5UES710	2	12	0	STR													49
5UES 711	2	29	0	STR													119
5UES712	2	21	0	STR													86
5UES713	2	13	6	STR													55
5UES714	2	14	0	STR													57
5UES1050	4	15	10	126	1	0	1	0	14	6							273
																TOTAL WEIGHT =	164,409
SPAN 6 – UPPER DECK SLAB – EPOXY COATED BARS																	
6UES 401	466	30	0	STR													9339
6UES402	330	11	11	101	11	5											2627
6UES403	64	12	5	101	11	11											531
6UES404	72	13	3	101	12	9											637
6UES405	16	2	4	104	1	9	0	8									25
6UES450	8	7	6	STR													40
6UES 501	110	30	0	STR													3442
6UES502	24	9	1	101	8	6											227
6UES503	10	15	3	STR													159
6UES504	260	3	11	105	1	2	1	10									1062
6UES 601	680	30	0	STR													30,641
6UES602	170	32	9	STR													8362
6UES603	272	30	0	STR													12,256
6UES604	190	12	6	STR													3567
6UES605	246	10	9	170	6	2	1	0	2	6	0	11					3972
6UES606	252	6	2	STR													2334
6UES607	252	10	6	170	6	2	1	0	2	3	0	11					3974

BAR SCHEDULE

MARK	NUMBER REQ'D	LENGTH FT.	LENGTH IN.	TYPE	A FT.	A IN.	B FT.	B IN.	C FT.	C IN.	D FT.	D IN.	E FT.	E IN.	SER. INCR. FT.	SER. INCR. IN.	WEIGHT (LBS.)
SPAN 6 – UPPER DECK SLAB – EPOXY COATED BARS (CONTINUED)																	
6UES608	2	20	0	STR													60
6UES609	36	13	0	STR													703
6UES610	46	13	10	STR													956
6UES650	20	7	6	STR													225
6UES 701	344	11	6	101	10	8											8086
6UES702	850	30	0	STR													52,122
6UES703	170	28	5	STR													9874
6UES704	2	27	0	STR													110
6UES705	2	12	6	STR													51
6UES1050	4	15	10	126	1	0	1	0	14	6							273
																TOTAL WEIGHT =	155,655
SPAN 7 – UPPER DECK SLAB – EPOXY COATED BARS																	
7UES 401	466	30	0	STR													9339
7UES402	466	11	11	101	11	5											3710
7UES403	16	2	4	104	1	9	0	8									25
7UES450	8	7	6	STR													40
7UES 501	110	30	0	STR													3442
7UES502	24	9	1	101	8	6											227
7UES503	10	15	3	STR													159
7UES504	234	3	11	105	1	2	1	10									956
7UES 601	680	30	0	STR													30,641
7UES602	170	32	9	STR													8362
7UES603	272	30	0	STR													12,256
7UES604	272	12	6	STR													5107
7UES605	498	10	9	170	6	2	1	0	2	6	0	11					8041
7UES606	250	6	2	STR													2316
7UES650	4	7	6	STR													45
7UES 701	340	11	6	101	10	8											7992
7UES702	850	30	0	STR													52,122
7UES703	170	28	5	STR													9874
7UES1050	4	15	10	126	1	0	1	0	14	6							273
																TOTAL WEIGHT =	154,927
SPAN 8 – UPPER DECK SLAB – EPOXY COATED BARS																	
8UES 401	466	30	0	STR													9339
8UES402	466	11	11	101	11	5											3710
8UES403	32	2	4	104	1	9	0	8									50
8UES450	8	7	6	STR													40
8UES 501	110	30	0	STR													3442
8UES502	24	9	1	101	8	6											227
8UES503	10	15	3	STR													159
8UES504	312	3	11	105	1	2	1	10									1275
8UES 601	680	30	0	STR													30,641
8UES602	170	32	9	STR													8362
8UES603	272	30	0	STR													12,256
8UES604	272	12	6	STR													5107
8UES605	498	10	9	170	6	2	1	0	2	6	0	11					8041
8UES606	250	6	2	STR													2316
8UES650	4	7	6	STR													45
8UES 701	340	11	6	101	10	8											7992
8UES702	850	30	0	STR													52,122
8UES703	170	28	5	STR													9874
8UES1050	4	15	10	126	1	0	1	0	14	6							273
																TOTAL WEIGHT =	155,271
SPAN 9 – UPPER DECK SLAB – EPOXY COATED BARS																	
9UES 401	402	30	0	STR													8056
9UES402	402	11	11	101	11	5											3200
9UES403	48	2	4	104	1	9	0	8									75
9UES450	8	7	6	STR													40

BAR BENDING DIAGRAMS

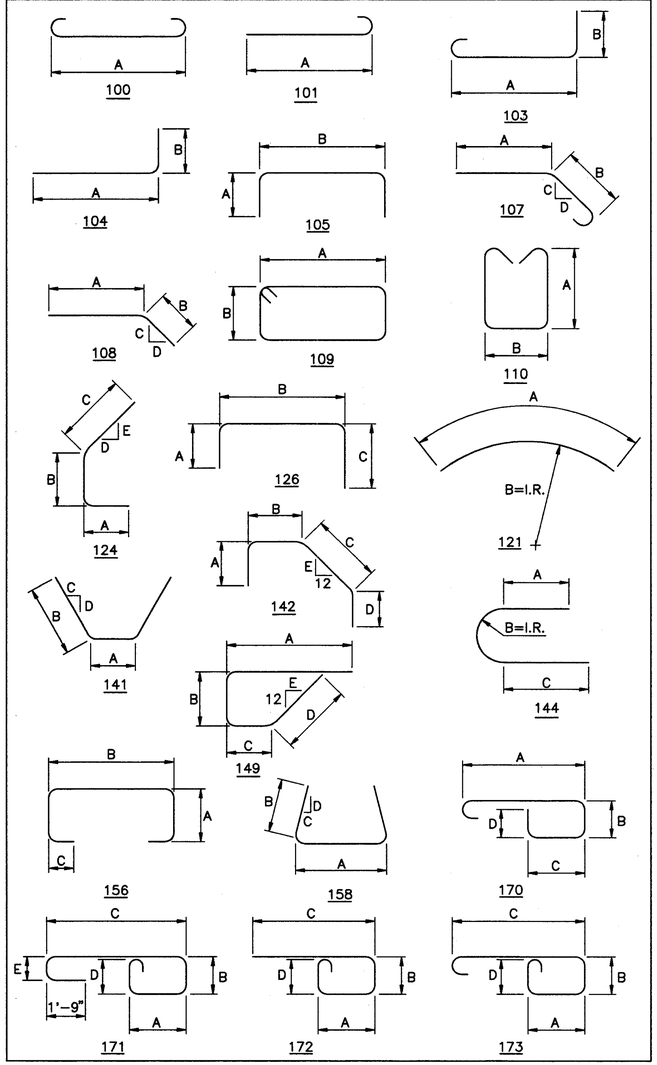

COUNTY BRIDGE NO. 84

REINFORCING STEEL SAMPLES

REFER TO CMS SECTIONS 106.03, 700, 709.00, AND 709.01. SUFFICIENT ADDITIONAL REINFORCING STEEL SHALL BE PROVIDED FOR SAMPLING. RANDOM SAMPLES SHALL BE REPLACED IN THE STRUCTURES BY THE ADDITIONAL STEEL, SPLICED IN ACCORDANCE WITH 509.08

HOWARD NEEDLES TAMMEN & BERGENDOFF
ARCHITECTS ENGINEERS PLANNERS
HNTB

REINFORCEMENT SCHEDULE
UPPER DECK SLABS
BR. NO. CUY – 6 – 1499
REHABILITATION OF
VETERANS MEMORIAL BRIDGE
(U.S. 6, 20, 42 & S.R. 3 OVER CUYAHOGA RIVER)
CLEVELAND CUYAHOGA COUNTY OHIO

DRAWN J.L.V.	TRACED J.L.V.	CHECKED B.E.B.	REVIEWED C.A.B.	REVISED
DATE 5/17/94	DATE 5/17/94	DATE 5/25/94	DATE 6/01/94	SHEET 264/270

\11646\CONCRETE\RSUDS1.DWG

FHWA REGION	STATE	PROJECT	
5	OHIO		

400/412

CUYAHOGA COUNTY
CUY – 6 – 14.99

BAR SCHEDULE

MARK	NUMBER REQ'D	LENGTH FT.	LENGTH IN.	TYPE	A FT.	A IN.	B FT.	B IN.	C FT.	C IN.	D FT.	D IN.	E FT.	E IN.	SER. INCR. FT.	SER. INCR. IN.	WEIGHT (LBS.)
SPAN 9 – UPPER DECK SLAB – EPOXY COATED BARS (CONTINUED)																	
9UES 501	88	30	0	STR													2754
9UES502	24	10	4	101	9	9											259
9UES503	10	18	0	STR													188
9UES504	442	3	11	105	1	2	1	10									1806
9UES 601	510	30	0	STR													22,981
9UES602	170	34	6	STR													8809
9UES603	236	30	0	STR													10,634
9UES604	236	12	6	STR													4431
9UES605	418	10	9	170	6	2	1	0	2	6	0	11					6749
9UES606	210	6	2	STR													1945
9UES650	4	7	6	STR													45
9UES 701	340	11	6	101	10	8											7992
9UES702	680	30	0	STR													41,698
9UES703	170	28	5	STR													9874
9UES1050	4	15	10	126	1	0	1	0	14	6							273
																TOTAL WEIGHT =	131,809
SPAN 10 – UPPER DECK SLAB – EPOXY COATED BARS																	
10UES 401	370	30	0	STR													7415
10UES402	370	11	11	101	11	5											2945
10UES403	32	2	4	104	1	9	0	8									50
10UES450	8	7	6	STR													40
10UES 501	88	30	0	STR													2754
10UES502	24	5	4	101	4	9											134
10UES503	10	7	9	STR													81
10UES504	260	3	11	105	1	2	1	10									1062
10UES 601	510	30	0	STR													22,981
10UES602	170	24	4	STR													6213
10UES603	218	30	0	STR													9823
10UES604	218	12	6	STR													4093
10UES605	386	10	9	170	6	2	1	0	2	6	0	11					6233
10UES606	194	6	2	STR													1797
10UES650	4	7	6	STR													45
10UES 701	340	11	6	101	10	8											7992
10UES702	680	30	0	STR													41,698
10UES703	170	18	3	STR													6342
10UES1050	4	15	10	126	1	0	1	0	14	6							273
																TOTAL WEIGHT =	121,971
SPAN 11 – UPPER DECK SLAB – EPOXY COATED BARS																	
11UES 401	258	30	0	STR													5170
11UES402	74	13	7	101	13	1											671
11UES403	16	2	4	104	1	9	0	8									25
11UES404	60	17	2	101	16	8											688
11UES405	29	19	7	101	19	1											379
11UES406	33	11	2	101	10	8											246
11UES407	30	12	4	101	11	10											247
11UES408	31	15	4	101	14	10											318
11UES409	13	14	4	101	13	10											124
11UES 501	64	30	0	STR													2003
11UES502	14	16	5	101	15	10											240
11UES503	4	11	8	STR													49
11UES504	263	3	11	105	1	2	1	10									1074
11UES505	33	16	4	101	15	9											562
11UES506	1	7	9	STR													8
11UES507	1	15	9	STR													16
11UES 601	336	30	0	STR													15,140
11UES602	176	24	4	101	23	8											6433
11UES603	152	30	0	STR													6849
11UES604	46	14	3	STR													985
11UES605	18	10	9	170	6	2	1	0	2	6	0	11					291
11UES606	28	6	2	STR													259

BAR SCHEDULE

MARK	NUMBER REQ'D	LENGTH FT.	LENGTH IN.	TYPE	A FT.	A IN.	B FT.	B IN.	C FT.	C IN.	D FT.	D IN.	E FT.	E IN.	SER. INCR. FT.	SER. INCR. IN.	WEIGHT (LBS.)
SPAN 11 – UPPER DECK SLAB – EPOXY COATED BARS (CONTINUED)																	
11UES607	1 SER.	11	2	170	6	2	1	0	2	11	0	11					
	OF 15	11	10		6	5			3	4					9/16		259
11UES608	1 SER.	12	8	173	0	8	1	0	9	3	0	11					
	OF 16	12	11						9	6					3/16		307
11UES609	18	15	9	STR													426
11UES610	36	17	10	STR													964
11UES 611	17	19	11	STR													509
11UES612	18	11	10	STR													320
11UES613	17	12	9	STR													326
11UES614	1 SER.	11	11	170	6	5	1	0	3	5	0	11					
	OF 17	13	10		7	0			4	9					1 7/16		329
11UES615	1 SER.	6	5	STR													
	OF 9	7	0												7/8		91
11UES616	1 SER.	13	11	173	0	8	1	0	10	6	0	11					
	OF 19	14	6						11	1					3/8		405
11UES617	1 SER.	10	6	STR													
	OF 10	11	1												3/4		162
11UES618	1 SER.	10	6	173	0	8	1	0	7	1	0	11					
	OF 47	12	8						9	3					9/16		818
11UES619	1 SER.	7	1	STR													
	OF 24	9	3												1 1/8		294
11UES620	1 SER.	11	0	170	6	3	1	0	2	8	0	11					
	OF 19	12	0		6	5			3	6					11/16		328
11UES 621	1 SER.	14	7	170	7	9	1	0	4	9	0	11					
	OF 41	16	10		9	3			5	6					11/16		967
11UES622	1 SER.	7	9	STR													
	OF 21	9	3												7/8		268
11UES623	1 SER.	12	1	170	6	5	1	0	3	7	0	11					
	OF 19	13	0		6	11			4	3					5/8		358
11UES624	1 SER.	6	5	STR													
	OF 10	6	11												11/16		100
11UES625	1 SER.	9	3	STR													
	OF 9	9	6												3/8		127
11UES626	1 SER.	13	3	170	6	11	1	0	4	3	0	11					
	OF 19	14	6		7	8			4	9					13/16		396
11UES627	1 SER.	6	11	STR													
	OF 10	7	8												1		110
11UES628	1 SER.	12	9	173	0	8	1	0	9	4	0	11					
	OF 13	12	11						9	6					3/16		251
11UES629	17	16	11	170	9	4	1	0	5	6	0	11					432
11UES630	9	9	4	STR													126
11UES 631	1 SER.	16	10	170	9	3	1	0	5	6	0	11					
	OF 15	17	1		9	6									1/4		382
11UES632	1 SER.	9	3	STR													
	OF 18	9	6												7/16		253
11UES633	1 SER.	9	4	STR													
	OF 7	9	6												3/8		99
11UES634	1	4	11	101	4	3											7
11UES635	1 SER.	11	0	STR													
	OF 4	27	0												5 4		114
11UES636	1 SER.	11	8	STR													
	OF 5	32	6												5 2 1/2		166
11UES637	1 SER.	5	10	101	5	3											
	OF 6	28	1		27	6									4 5 3/8		153
11UES638	1	16	2	STR													24
11UES639	1	25	10	101	25	2											39
11UES640	1	13	2	101	12	6											20
11UES 641	1	5	8	101	5	0											9
11UES642	4	19	0	101	18	4											114
11UES643	1	15	5	101	14	9											23
11UES644	1	9	11	101	9	3											15
11UES645	20	8	0	STR													240
11UES 701	170	11	6	101	10	8											3996
11UES702	335	30	0	STR													20,542
11UES703	173	34	1	STR													12,052
11UES704	4	25	6	STR													208
11UES705	1	14	9	STR													30
11UES706	1	9	3	STR													19
11UES707	1	4	3	STR													9
11UES708	1	36	9	STR													75
11UES709	1	25	0	STR													51

BAR BENDING DIAGRAMS

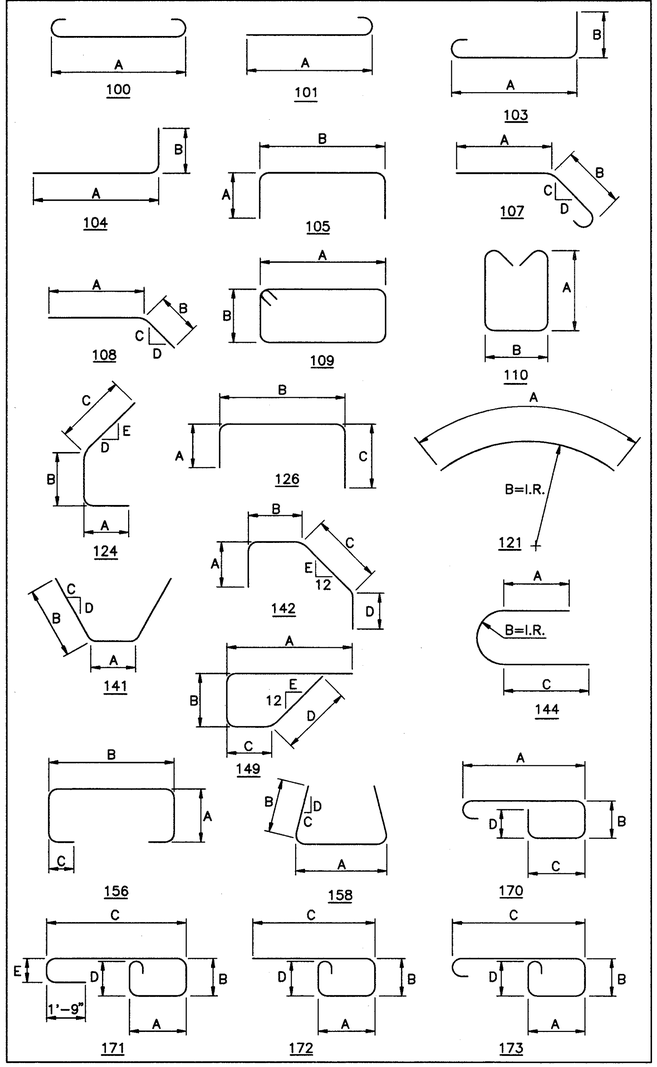

REINFORCING STEEL SAMPLES

REFER TO CMS SECTIONS 106.03, 700, 709.00, AND 709.01. SUFFICIENT ADDITIONAL REINFORCING STEEL SHALL BE PROVIDED FOR SAMPLING. RANDOM SAMPLES SHALL BE REPLACED IN THE STRUCTURES BY THE ADDITIONAL STEEL, SPLICED IN ACCORDANCE WITH 509.08

COUNTY BRIDGE NO. 84

HOWARD NEEDLES TAMMEN & BERGENDOFF
ARCHITECTS ENGINEERS PLANNERS
HNTB

REINFORCEMENT SCHEDULE
UPPER DECK SLABS
BR. NO. CUY – 6 – 1499
REHABILITATION OF
VETERANS MEMORIAL BRIDGE
(U.S. 6, 20, 42 & S.R. 3 OVER CUYAHOGA RIVER)
CLEVELAND CUYAHOGA COUNTY OHIO

DRAWN J.L.V.	TRACED J.L.V.	CHECKED B.E.B.	REVIEWED C.A.B.	REVISED
DATE 5/17/94	DATE 5/17/94	DATE 5/25/94	DATE 6/01/94	SHEET 265/270

\11646\CONCRETE\RSUDS1.DWG

FHWA REGION	STATE	PROJECT	
5	OHIO		

401
412

CUYAHOGA COUNTY
CUY – 6 – 14.99

BAR SCHEDULE

MARK	NUMBER REQ'D	LENGTH FT.	LENGTH IN.	TYPE	A FT.	A IN.	B FT.	B IN.	C FT.	C IN.	D FT.	D IN.	E FT.	E IN.	SER. INCR. FT.	SER. INCR. IN.	WEIGHT (LBS.)
SPAN 11 – UPPER DECK SLAB – EPOXY COATED BARS (CONTINUED)																	
11UES710	1	12	5	STR													25
11UES 711	1	5	0	STR													10
11UES712	1 SER.	9	3	STR													
	OF 3	19	7												5	2	88
11UES713	1 SER.	13	6	STR													
	OF 4	29	0												5	2	174
11UES714	1 SER.	5	7	STR													
	OF 8	37	6												4	7 3/16	352
11UES715	20	8	0	STR													327
																TOTAL WEIGHT =	90,066
SPAN 12 – UPPER DECK SLAB – EPOXY COATED BARS																	
12UES 401	370	30	0	STR													7415
12UES402	357	16	10	101	16	4											4014
12UES403	13	16	10	101	16	4											146
12UES404	13	21	2	101	20	8											184
12UES405	13	15	9	101	15	3											137
12UES 501	68	30	0	STR													2128
12UES502	12	35	1	101	34	6											439
12UES503	6	21	1	101	20	6											132
12UES504	726	3	11	105	1	2	1	10									2966
12UES505	10	20	6	STR													214
12UES506	2	11	0	STR													23
12UES507	1	17	1	101	16	6											18
12UES508	1	5	0	101	4	5											5
12UES509	11	34	10	101	34	2											400
12UES510	4	20	2	STR													84
12UES 511	1	11	0	STR													11
12UES512	1	32	7	101	32	0											34
12UES513	1	30	7	101	30	0											32
12UES514	6	11	8	STR													73
12UES 601	572	30	0	STR													25,774
12UES602	380	22	10	101	22	2											13,032
12UES603	212	30	0	STR													9553
12UES604	196	17	3	STR													5078
12UES605	96	10	6	170	6	2	1	0	2	3	0	11					1550
12UES606	48	6	2	STR													445
12UES607	1 SER.	10	6	170	6	2	1	0	2	3	0	11					
	OF 25	11	2		6	6			3	7						5/16	407
12UES608	1 SER.	6	2	STR													
	OF 13	6	6													5/16	124
12UES609	16	17	3	STR													415
12UES610	1	12	0	101	11	4											18
12UES 611	1	27	9	STR													42
12UES612	1	13	3	STR													20
12UES613	1	16	8	STR													25
12UES614	1 SER.	14	10	170	8	4	1	0	4	5	0	11					
	OF 25	16	7		9	1			5	5						7/8	590
12UES615	1 SER.	8	4	STR													
	OF 13	9	1													3/4	170
12UES616	1 SER.	12	6	170	7	2	1	0	3	3	0	11					
	OF 27	14	8		8	3			4	4						1	551
12UES617	1 SER.	7	2	STR													
	OF 14	8	3													1	162
12UES618	1 SER.	11	2	170	6	6	1	0	2	7	0	11					
	OF 25	12	6		7	2			3	3						5/8	444
12UES619	1 SER.	6	6	STR													
	OF 13	7	2													5/8	133
12UES620	1 SER.	11	5	173	0	8	1	0	8	0	0	11					
	OF 25	12	1						8	8						5/16	441
12UES 621	1 SER.	8	0	STR													
	OF 13	8	8													11/16	163
12UES622	1 SER.	10	11	173	0	8	1	0	7	6	0	11					
	OF 25	11	5						8	0						1/4	419
12UES623	1 SER.	7	6	STR													
	OF 13	8	0													1/2	151
12UES624	3	13	10	173	0	8	1	0	10	5	0	11					62
12UES625	77	10	5	173	0	8	1	0	7	0	0	11					1205
12UES626	39	7	0	STR													410

BAR SCHEDULE

MARK	NUMBER REQ'D	LENGTH FT.	LENGTH IN.	TYPE	A FT.	A IN.	B FT.	B IN.	C FT.	C IN.	D FT.	D IN.	E FT.	E IN.	SER. INCR. FT.	SER. INCR. IN.	WEIGHT (LBS.)
SPAN 12 – UPPER DECK SLAB – EPOXY COATED BARS (CONTINUED)																	
12UES627	1 SER.	10	6	173	0	8	1	0	7	1	0	11					
	OF 49	10	11						7	6						1/8	788
12UES628	1 SER.	7	1	STR													
	OF 24	7	6													3/16	263
12UES629	20	12	10	173	0	8	1	0	9	5	0	11					386
12UES630	11	9	5	STR													156
12UES 631	2	10	5	STR													31
12UES 701	192	20	11	STR													8209
12UES702	760	30	0	STR													46,603
12UES703	1	19	4	STR													40
12UES704	1	34	3	STR													70
12UES705	1	19	8	STR													40
12UES706	1	21	5	STR													44
																TOTAL WEIGHT =	136,469
SPAN 13 – UPPER DECK SLAB – EPOXY COATED BARS																	
13UES 401	230	30	0	STR													4609
13UES402	38	13	10	101	13	4											351
13UES403	40	2	4	104	1	9	0	8									62
13UES404	13	21	3	101	20	9											185
13UES405	115	19	6	101	19	0											1498
13UES406	67	18	8	101	18	2											835
13UES450	8	7	6	STR													40
13UES 501	44	30	0	STR													1377
13UES502	16	11	1	101	10	6											185
13UES503	6	19	0	STR													119
13UES504	147	3	11	105	1	2	1	10									601
13UES505	3	5	11	100	4	9											19
13UES506	3	4	9	STR													15
13UES507	12	25	1	101	24	6											314
13UES508	5	19	0	STR													99
13UES 601	384	30	0	STR													17,303
13UES602	192	13	10	101	13	2											3989
13UES603	134	30	0	STR													6038
13UES604	26	14	7	STR													570
13UES605	121	10	9	170	6	2	1	0	2	6	0	11					1954
13UES606	61	6	2	STR													565
13UES607	11	16	6	170	9	4	1	0	5	1	0	11					273
13UES608	6	9	4	STR													84
13UES609	41	19	1	STR													1175
13UES610	3	12	9	173	0	8	1	0	9	4	0	11					57
13UES 611	67	20	3	STR													2038
13UES612	10	18	11	101	18	3											284
13UES613	2	9	4	STR													28
13UES614	29	14	1	170	6	11	1	0	5	1	0	11					613
13UES615	53	6	11	STR													551
13UES616	78	10	4	173	0	8	1	0	6	11	0	11					1211
13UES617	16	8	0	STR													192
13UES650	4	7	6	STR													45
13UES 701	202	11	6	101	10	8											4748
13UES702	384	30	0	STR													23,547
13UES703	192	23	7	STR													9255
13UES704	10	25	4	STR													518
13UES705	16	8	0	STR													262
13UES 1050	4	20	10	126	1	0	1	0	19	6							359
																TOTAL WEIGHT =	85,968
EAST SIDE STATION – UPPER DECK SLAB – EPOXY COATED BARS																	
ESUES 401	325	30	0	STR													6513
ESUES402	290	30	6	101	30	0											5908
ESUES403	494	33	0	101	32	6											10,890
ESUES404	21	18	6	STR													260
ESUES405	1 SER.	10	3	STR													
	OF 19	18	6													5 1/2	182
ESUES406	186	9	6	STR													1180
ESUES407	177	6	0	172	0	8	1	0	3	3	0	11					709

BAR BENDING DIAGRAMS

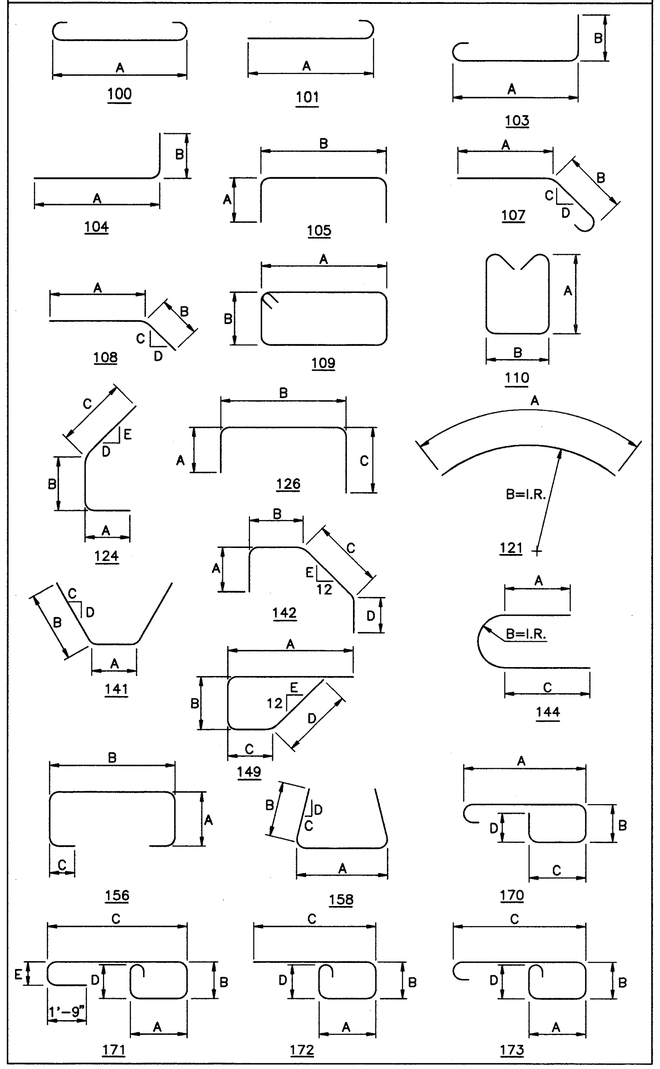

COUNTY BRIDGE NO. 84

REINFORCING STEEL SAMPLES

REFER TO CMS SECTIONS 106.03, 700, 709.00, AND 709.01. SUFFICIENT ADDITIONAL REINFORCING STEEL SHALL BE PROVIDED FOR SAMPLING. RANDOM SAMPLES SHALL BE REPLACED IN THE STRUCTURES BY THE ADDITIONAL STEEL, SPLICED IN ACCORDANCE WITH 509.08

HOWARD NEEDLES TAMMEN & BERGENDOFF
ARCHITECTS ENGINEERS PLANNERS
HNTB

REINFORCEMENT SCHEDULE
UPPER DECK SLABS
BR. NO. CUY – 6 – 1499
REHABILITATION OF
VETERANS MEMORIAL BRIDGE
(U.S. 6, 20, 42 & S.R. 3 OVER CUYAHOGA RIVER)

CLEVELAND CUYAHOGA COUNTY OHIO

DRAWN J.L.V.	TRACED J.L.V.	CHECKED B.E.B.	REVIEWED C.A.B.	REVISED
DATE 5/18/94	DATE 5/18/94	DATE 5/25/94	DATE 6/01/94	SHEET 266/270

\11646\CONCRETE\RSUDS1.DWG

FHWA REGION	STATE	PROJECT	
5	OHIO		

402 / 412

CUYAHOGA COUNTY
CUY – 6 – 14.99

BAR SCHEDULE

MARK	NUMBER REQ'D	LENGTH FT.	LENGTH IN.	TYPE	A FT.	A IN.	B FT.	B IN.	C FT.	C IN.	D FT.	D IN.	E FT.	E IN.	SER. INCR. FT.	SER. INCR. IN.	WEIGHT (LBS.)
EAST SIDE STATION – UPPER DECK SLAB – EPOXY COATED BARS (CONTINUED)																	
ESUES408	1 SER.	14	9	101	14	3											
	OF 43	33	2		32	8									5	1/4	688
ESUES409	108	33	9	STR													2435
ESUES410	132	5	0	STR													441
ESUES 411	1 SER.	29	0	STR													
	OF 11	33	7												5	1/2	230
ESUES412	1 SER.	21	9	STR													
	OF 13	27	3												5	1/2	213
ESUES413	1 SER.	14	5	STR													
	OF 13	19	11												5	1/2	149
ESUES414	1 SER.	9	9	156	1	0	6	9	0	8							
	OF 17	17	1				14	1							5	1/2	152
ESUES415	33	9	2	156	1	0	6	2	0	8							202
ESUES416	12	6	2	STR													49
ESUES 501	270	30	0	STR													8448
ESUES502	18	20	4	101	19	9											382
ESUES503	4	19	9	STR													82
ESUES504	5	9	10	101	9	3											51
ESUES505	4	9	3	STR													39
ESUES506	3	7	4	100	6	2											23
ESUES507	3	6	2	STR													19
ESUES508	1 SER.	28	0	STR													
	OF 12	37	5												10	1/4	409
ESUES509	1 SER.	10	5	STR													
	OF 32	36	11												10	1/4	790
ESUES510	44	8	0	STR													367
ESUES 511	198	5	10	149	1	7	1	7	0	9	2	2	12				1205
ESUES 601	1616	30	0	STR													72,817
ESUES602	243	30	8	101	30	0											11,193
ESUES603	7	12	8	101	12	0											133
ESUES604	24	18	0	101	17	4											649
ESUES605	208	33	3	STR													10,388
ESUES606	22	19	6	STR													644
ESUES607	5	10	9	STR													81
ESUES608	1 SER.	30	8	101	30	0											
	OF 12	40	1		39	5									10	1/4	638
ESUES609	1 SER.	14	1	101	13	5											
	OF 32	40	7		39	11									10	1/4	1314
ESUES610	1 SER.	14	3	100	12	11											
	OF 20	25	4		24	0										7	595
ESUES 611	9	35	2	101	34	6											475
ESUES612	134	6	2	STR													1241
ESUES613	119	10	6	170	6	2	1	0	2	3	0	11					1877
ESUES614	146	11	3	170	6	2	1	0	3	0	0	11					2467
ESUES615	63	9	6	156	1	0	6	2	1	0							899
ESUES616	10	17	4	170	9	4	1	7	4	9	1	6					260
ESUES617	6	9	4	STR													84
ESUES618	15	13	10	170	7	0	1	0	4	9	0	11					312
ESUES619	47	7	0	STR													494
ESUES620	76	10	5	173	0	8	1	0	7	0	0	11					1189
ESUES 701	192	17	10	101	17	0											6999
ESUES702	1548	30	0	STR													94,923
ESUES703	7	13	9	STR													197
ESUES704	24	18	0	STR													883
ESUES705	9	16	11	100	15	3											311
ESUES706	9	15	3	STR													281
ESUES707	1 SER.	12	11	STR													
	OF 20	24	0													7	755
															TOTAL WEIGHT =		254,115
EAST SIDE SUBWAY – UPPER DECK SLAB – EPOXY COATED BARS																	
ESBUES 401	279	30	0	STR													5591
ESBUES402	97	15	0	101	14	6											972
ESBUES403	23	26	0	101	25	6											399
ESBUES404	23	24	0	101	23	6											369
ESBUES405	23	22	0	101	21	6											338
ESBUES406	24	20	0	101	19	6											321
ESBUES 501	409	30	0	STR													12,798

BAR SCHEDULE

MARK	NUMBER REQ'D	LENGTH FT.	LENGTH IN.	TYPE	A FT.	A IN.	B FT.	B IN.	C FT.	C IN.	D FT.	D IN.	E FT.	E IN.	SER. INCR. FT.	SER. INCR. IN.	WEIGHT (LBS.)
EAST SIDE SUBWAY – UPPER DECK SLAB – EPOXY COATED BARS (CONTINUED)																	
ESBUES502	56	15	0	STR													876
ESBUES503	13	25	6	STR													346
ESBUES504	13	23	6	STR													319
ESBUES505	13	21	6	STR													292
ESBUES506	13	19	6	STR													264
ESBUES507	30	20	0	STR													626
ESBUES508	238	19	0	STR													4716
ESBUES509	148	18	0	STR													2779
ESBUES510	66	16	0	STR													1101
ESBUES 601	271	30	0	STR													12,211
ESBUES602	30	21	0	101	20	4											946
ESBUES603	238	20	0	101	19	4											7150
ESBUES604	148	19	0	101	18	4											4224
ESBUES605	66	17	0	101	16	4											1685
ESBUES606	337	4	10	149	1	8	1	2	0	9	1	7	12				2447
															TOTAL WEIGHT =		60,770
LIGHTING – TYPE A – EPOXY COATED BARS																	
ELA 601	108	16	8	105	8	2	0	8									———
ELA602	54 Ser.	15	10	105	7	9	0	8									———
	of 10	6	10		3	3										6	———
ELA603	81	12	11	109	3	8	2	6									———
ELA604	54	11	11	109	3	8	2	0									———
ELA605	54	24	0	141	1	2	11	6	12		12						———
ELA606	81	12	0	115	1	2	2	3	2	5	12		12				———
ELA607	27	26	2	115	1	2	7	3	2	5	12		12				———
LIGHTING – TYPE B – EPOXY COATED BARS																	
ELB 601	8	19	0	105	9	4	0	8									———
ELB602	4 Ser.	18	4	105	9	0	0	8									———
	of 10	9	4		4	6										6	———
ELB603	6	13	7	109	3	8	2	10									———
ELB604	4	12	11	109	3	8	2	6									———
ELB605	4	27	3	141	1	5	13	0	12		12						———
ELB606	6	13	3	115	1	5	2	7	2	5	12		12				———
ELB607	1	30	5	115	1	5	8	8	2	5	12		12				———
ELB608	1	27	4	115	1	5	7	7	2	5	12		12				———

BAR BENDING DIAGRAMS

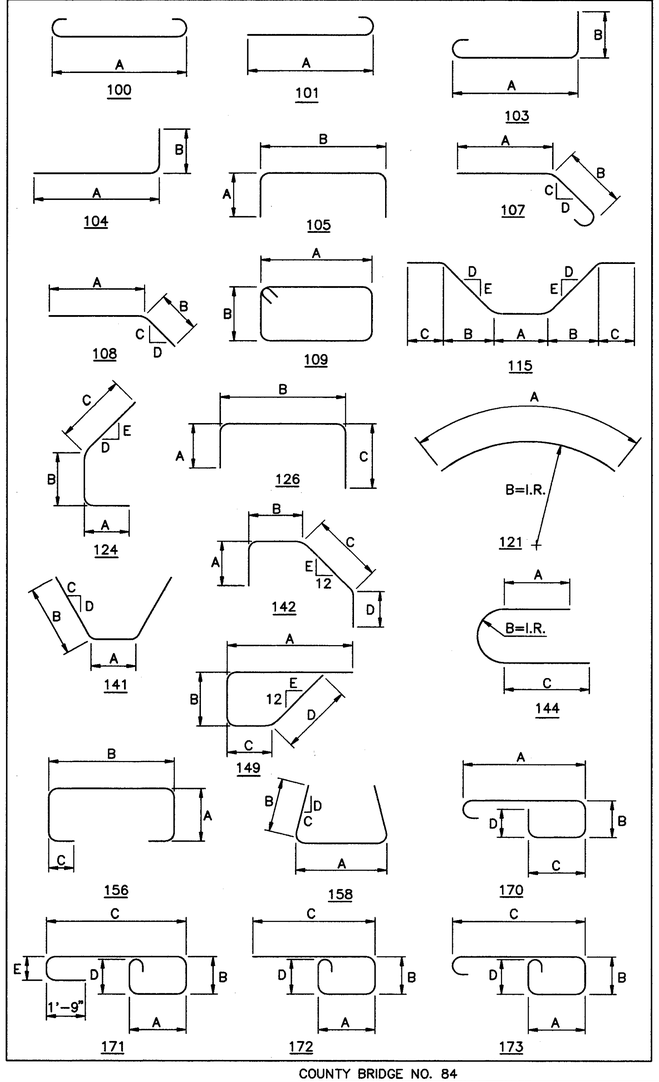

REINFORCING STEEL SAMPLES

REFER TO CMS SECTIONS 106.03, 700, 709.00, AND 709.01. SUFFICIENT ADDITIONAL REINFORCING STEEL SHALL BE PROVIDED FOR SAMPLING. RANDOM SAMPLES SHALL BE REPLACED IN THE STRUCTURES BY THE ADDITIONAL STEEL, SPLICED IN ACCORDANCE WITH 509.08

COUNTY BRIDGE NO. 84

HOWARD NEEDLES TAMMEN & BERGENDOFF
ARCHITECTS ENGINEERS PLANNERS
HNTB

REINFORCEMENT SCHEDULE
UPPER DECK SLABS AND LIGHTING
BR. NO. CUY – 6 – 1499
REHABILITATION OF
VETERANS MEMORIAL BRIDGE
(U.S. 6, 20, 42 & S.R. 3 OVER CUYAHOGA RIVER)
CLEVELAND CUYAHOGA COUNTY OHIO

DRAWN J.L.V.	TRACED J.L.V.	CHECKED B.E.B.	REVIEWED C.A.B.	REVISED
DATE 5/18/94	DATE 5/18/94	DATE 5/25/94	DATE 6/01/94	SHEET 266A/270

\11646\CONCRETE\RSUDS1.DWG

FHWA REGION	STATE	PROJECT	
5	OHIO		

403 / 412

CUYAHOGA COUNTY
CUY – 6 – 14.99

BAR SCHEDULE

MARK	NUMBER REQ'D	LENGTH FT.	LENGTH IN.	TYPE	A FT.	A IN.	B FT.	B IN.	C FT.	C IN.	D FT.	D IN.	E FT.	E IN.	SER. INCR. FT.	SER. INCR. IN.	WEIGHT (LBS.)
WEST SIDE STATION – RAILING – EPOXY COATED BARS																	
WSER 401	21	7	10	109	2	9	0	11									110
WSER 402	21	8	9	180	3	4	1	6	0	6	2	7	0	6			—
WSER 403	474	7	0	110	2	9	0	11									2216
WSER 404	474	3	4	109	0	5	1	0									—
WSER 405	186	5	3	109	0	8½	1	8									—
WSER 406	24	3	3	109	0	8½	0	8									—
WSER 407	6	6	1	109	1	1½	1	8									—
WSER 408	2	4	8	105	1	5	2	0									—
WSER 501	66	30	0	STR													—
WSER 502	6	19	9	STR													—
WSER 503	6	4	7	105	2	0	0	10									—
WSER 504	1	12	10	105	6	3	0	7									—
WSER 505	6	13	9	STR													—
WSER 506	6	29	0	STR													—
WSER 507	1	11	6	105	5	7	0	7									—
WSER 701	44	30	0	STR													—
WSER 702	4	25	0	STR													—
WSER 703	4	11	3	STR													—
WSER 704	4	27	3	STR													—
WSER 705	4	33	9	STR													—
WSER 706	4	10	9	STR													—
WSER 801	105	11	4	174	5	0	0	2½	1	4							3177
WSER 802	3	11	9	176	5	0	1	0	1	4							94
																TOTAL WEIGHT =	5597
SPAN 1A – RAILING – EPOXY COATED BARS																	
1AER 401	52	7	10	109	2	9	0	11									272
1AER 402	52	8	9	180	3	4	1	6	0	6	2	7	0	6			—
1AER 403	200	7	0	110	2	9	0	11									935
1AER 404	200	3	4	109	0	5	1	0									—
1AER 405	96	5	3	109	0	8½	1	8									—
1AER 406	12	3	3	109	0	8½	0	8									—
1AER 501	24	30	0	STR													—
1AER 502	12	27	0	STR													—
1AER 503	12	4	7	105	2	0	0	10									—
1AER 504	2	13	0	105	6	4	0	7									—
1AER 505	12	11	8	STR													—
1AER 506	2	23	8	105	11	8	0	7									—
1AER 701	16	30	0	STR													—
1AER 702	8	26	0	STR													—
1AER 703	16	11	8	STR													—
1AER 801	54	11	4	174	5	0	0	2½	1	4							1634
																TOTAL WEIGHT =	2841
SPAN 1B – RAILING – EPOXY COATED BARS																	
1BER 401	28	7	10	109	2	9	0	11									147
1BER 402	28	8	9	180	3	4	1	6	0	6	2	7	0	6			—
1BER 403	282	7	0	110	2	9	0	11									1319
1BER 404	282	3	4	109	0	5	1	0									—
1BER 405	144	5	3	109	0	8½	1	8									—
1BER 501	36	30	0	STR													—
1BER 502	12	8	4	108	6	1	2	3	1 13/16		12						—
1BER 503	12	4	7	105	2	0	0	10									—
1BER 504	2	12	6	105	6	1	0	7									—
1BER 505	2	12	4	105	6	0	0	7									—
1BER 506	12	12	9	STR													—
1BER 507	12	19	10	108	17	7	2	3	1 13/16		12						—
1BER 701	24	30	0	STR													—
1BER 702	8	11	0	108	6	1	4	11	1 13/16		12						—
1BER 703	8	20	9	STR													—
1BER 704	8	16	4	108	11	5	4	11	1 13/16		12						—
1BER 705	8	11	0	STR													—
1BER 801	72	11	4	174	5	0	0	2½	1	4							2179
																TOTAL WEIGHT =	3645

BAR SCHEDULE

MARK	NUMBER REQ'D	LENGTH FT.	LENGTH IN.	TYPE	A FT.	A IN.	B FT.	B IN.	C FT.	C IN.	D FT.	D IN.	E FT.	E IN.	SER. INCR. FT.	SER. INCR. IN.	WEIGHT (LBS.)
SPAN 1 – RAILING – EPOXY COATED BARS																	
1ER 401	28	7	10	109	2	9	0	11									147
1ER 402	28	8	9	180	3	4	1	6	0	6	2	7	0	6			—
1ER 403	308	7	0	110	2	9	0	11									1440
1ER 404	308	3	4	109	0	5	1	0									—
1ER 405	156	5	3	109	0	8½	1	8									—
1ER 501	48	30	0	STR													—
1ER 502	12	18	3	STR													—
1ER 503	12	4	7	105	2	0	0	10									—
1ER 504	2	12	4	105	6	0	0	7									—
1ER 505	2	12	10	105	6	3	0	7									—
1ER 701	24	30	0	STR													—
1ER 702	8	30	9	STR													—
1ER 703	16	11	8	STR													—
1ER 801	78	11	4	174	5	0	0	2½	1	4							2360
																TOTAL WEIGHT =	3947
SPAN 2 – RAILING – EPOXY COATED BARS																	
2ER 401	28	7	10	109	2	9	0	11									147
2ER 402	28	8	9	180	3	4	1	6	0	6	2	7	0	6			—
2ER 403	386	7	1	110	2	9	0	11									1805
2ER 404	386	3	4	109	0	5	1	0									—
2ER 405	192	5	3	109	0	8½	1	8									—
2ER 501	60	30	0	STR													—
2ER 502	12	26	0	STR													—
2ER 503	12	4	7	105	2	0	0	10									—
2ER 504	2	12	10	105	6	3	0	7									—
2ER 505	2	12	10	105	6	3	0	7									—
2ER 701	40	30	0	STR													—
2ER 702	8	16	0	STR													—
2ER 703	16	11	8	STR													—
2ER 801	96	11	4	174	5	0	0	2½	1	4							2905
																TOTAL WEIGHT =	4857
SPAN 3 – RAILING – EPOXY COATED BARS																	
3ER 401	14	7	10	109	2	9	0	11									73
3ER 402	14	8	9	180	3	4	1	6	0	6	2	7	0	6			—
3ER 403	476	7	1	110	2	9	0	11									2226
3ER 404	476	3	4	109	0	5	1	0									—
3ER 405	204	5	3	109	0	8½	1	8									—
3ER 406	12	3	3	109	0	8½	0	8									—
3ER 501	72	30	0	STR													—
3ER 502	12	14	9	STR													—
3ER 503	6	4	7	105	2	0	0	10									—
3ER 504	2	12	10	105	6	3	0	7									—
3ER 701	48	30	0	STR													—
3ER 702	8	24	0	STR													—
3ER 703	8	11	8	STR													—
3ER 801	108	11	4	174	5	0	0	2½	1	4							3268
																TOTAL WEIGHT =	5567
PIER 3 – RAILING – EPOXY COATED BARS																	
P3ER 501	20	6	6	STR													—
P3ER 502	20	5	3	STR													—
P3ER 503	12	4	7	105	2	0	0	10									—
P3ER 504	8	4	4	105	2	0	0	7									—
P3ER 505	24	4	6	STR													—
P3ER 506	24	18	11	105	1	3	16	8									—
P3ER 507	10	12	6	STR													—
P3ER 508	16	5	5	105	1	3	3	2									—
P3ER 509	4	16	10	STR													—
P3ER 510	24	7	11	109	2	9	0	11									198
P3ER 511	4	8	10	109	3	6	0	8									—
P3ER 512	4	9	2	109	3	8	0	8									—

BAR BENDING DIAGRAMS

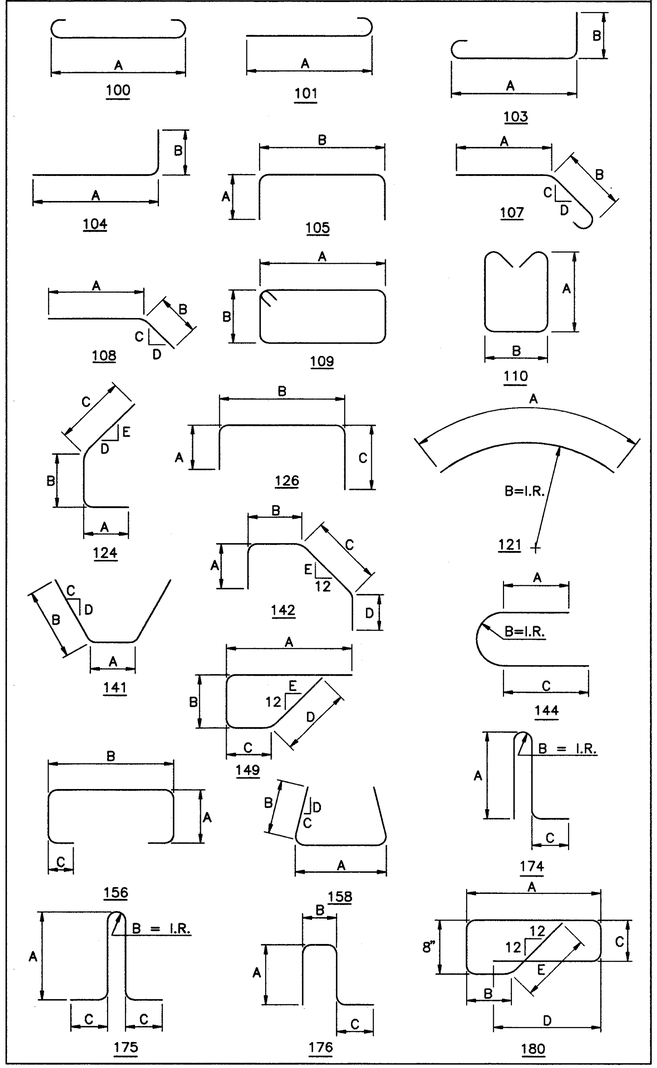

COUNTY BRIDGE NO. 84

REINFORCING STEEL SAMPLES

REFER TO CMS SECTIONS 106.03, 700, 709.00, AND 709.01. SUFFICIENT ADDITIONAL REINFORCING STEEL SHALL BE PROVIDED FOR SAMPLING. RANDOM SAMPLES SHALL BE REPLACED IN THE STRUCTURES BY THE ADDITIONAL STEEL, SPLICED IN ACCORDANCE WITH 509.08

HOWARD NEEDLES TAMMEN & BERGENDOFF
ARCHITECTS ENGINEERS PLANNERS
HNTB

REINFORCEMENT SCHEDULE
UPPER DECK RAILINGS
BR. NO. CUY – 6 – 1499
REHABILITATION OF
VETERANS MEMORIAL BRIDGE
(U.S. 6, 20, 42 & S.R. 3 OVER CUYAHOGA RIVER)

CLEVELAND CUYAHOGA COUNTY OHIO

DRAWN	TRACED	CHECKED	REVIEWED	REVISED
J.L.V.	J.L.V.	R.E.B.	C.A.B.	
DATE 4/13/94	DATE 4/13/94	DATE 4/18/94	DATE 6/01/94	SHEET 267/270

\11646\CONCRETE\RSRAILS1.DWG

FHWA REGION	STATE	PROJECT	
5	OHIO		

404 / 412

CUYAHOGA COUNTY
CUY – 6 – 14.99

BAR SCHEDULE

MARK	NUMBER REQ'D	LENGTH FT.	LENGTH IN.	TYPE	A FT.	A IN.	B FT.	B IN.	C FT.	C IN.	D FT.	D IN.	E FT.	E IN.	SER. INCR. FT.	SER. INCR. IN.	WEIGHT (LBS.)
PIER 3 – RAILING – EPOXY COATED BARS (CONTINUED)																	
P3ER513	4	10	3	180	4	2	2	2	0	6	2	9	0	6			—
P3ER514	4	10	9	180	4	5	2	5	0	6	2	9	0	6			—
P3ER515	4	13	1	180	5	7	3	7	0	6	2	9	0	6			—
P3ER516	4	13	1	180	5	7	3	7	0	6	2	9	0	6			—
P3ER517	70	9	3	104	8	6	0	10									675
P3ER518	30	4	5	105	1	4	2	0									138
P3ER519	54	6	6	STR													—
P3ER520	30	7	3	109	2	2	1	2									—
P3ER 521	8 SER.	4	10	175	1	3	0	6	0	10							
	OF 4	3	11		1	1	0	4							0	3 11/16	—
P3ER522	16	4	3	175	1	2	0	5	0	10							—
P3ER 701	8	6	6	STR													—
P3ER702	8	5	3	STR													—
																TOTAL WEIGHT =	1011
SPAN 4 – RAILING – EPOXY COATED BARS																	
4ER 401	28	7	10	109	2	9	0	11									147
4ER402	28	8	9	180	3	4	1	6	0	6	2	7	0	6			—
4ER403	1472	7	0	110	2	9	0	11									6883
4ER404	1472	3	4	109	0	5	1	0									—
4ER405	336	5	3	109	0	8½	1	8									—
4ER406	528	3	3	109	0	8½	0	8									—
4ER 501	24	25	7	STR													—
4ER502	216	24	3	STR													—
4ER503	24	4	7	105	2	0	0	10									—
4ER504	24	24	11	STR													—
4ER505	8	12	10	105	6	3	0	7									—
4ER506	24	23	6	STR													—
4ER 701	16	25	7	STR													—
4ER702	144	24	3	STR													—
4ER703	32	11	4	STR													—
4ER704	16	18	6	STR													—
4ER705	16	17	1	STR													—
4ER 801	432	11	4	174	5	0	0	2½	1	4							13,072
																TOTAL WEIGHT =	20,102
PIER 4 – RAILING – EPOXY COATED BARS																	
P4ER 501	20	6	6	STR													—
P4ER502	20	5	3	STR													—
P4ER503	12	4	7	105	2	0	0	10									—
P4ER504	8	4	4	105	2	0	0	7									—
P4ER505	24	4	6	STR													—
P4ER506	24	18	11	105	1	3	16	8									—
P4ER507	10	12	6	STR													—
P4ER508	16	5	5	105	1	3	3	2									—
P4ER509	4	16	10	STR													—
P4ER510	24	7	11	109	2	9	0	11									198
P4ER 511	4	8	10	109	3	6	0	8									—
P4ER512	4	9	2	109	3	8	0	8									—
P4ER513	4	10	3	180	4	2	2	2	0	6	2	9	0	6			—
P4ER514	4	10	9	180	4	5	2	5	0	6	2	9	0	6			—
P4ER515	4	13	1	180	5	7	3	7	0	6	2	9	0	6			—
P4ER516	4	13	1	180	5	7	3	7	0	6	2	9	0	6			—
P4ER517	70	9	3	104	8	6	0	10									675
P4ER518	30	4	5	105	1	4	2	0									138
P4ER519	54	6	6	STR													—
P4ER520	30	7	3	109	2	2	1	2									—
P4ER 521	8 SER.	4	10	175	1	3	0	6	0	10							
	OF 4	3	11		1	1	0	4							0	3 11/16	—
P4ER522	16	4	3	175	1	2	0	5	0	10							—
P4ER 701	8	6	6	STR													—
P4ER702	8	5	3	STR													—
																TOTAL WEIGHT =	1011
SPAN 5 – RAILING – EPOXY COATED BARS																	
5ER 401	14	7	10	109	2	9	0	11									73
5ER402	14	8	9	180	3	4	1	6	0	6	2	7	0	6			—

BAR SCHEDULE

MARK	NUMBER REQ'D	LENGTH FT.	LENGTH IN.	TYPE	A FT.	A IN.	B FT.	B IN.	C FT.	C IN.	D FT.	D IN.	E FT.	E IN.	SER. INCR. FT.	SER. INCR. IN.	WEIGHT (LBS.)
SPAN 5 – RAILING – EPOXY COATED BARS (CONTINUED)																	
5ER403	392	7	0	110	2	9	0	11									1833
5ER404	392	3	4	109	0	5	1	0									—
5ER405	168	5	3	109	0	8½	1	8									—
5ER406	12	3	3	109	0	8½	0	8									—
5ER 501	60	30	0	STR													—
5ER502	12	11	9	STR													—
5ER503	6	4	7	105	2	0	0	10									—
5ER504	2	12	10	105	6	3	0	7									—
5ER 701	40	30	0	STR													—
5ER702	8	18	6	STR													—
5ER703	8	11	8	STR													—
5ER 801	108	11	4	174	5	0	0	2½	1	4							2905
																TOTAL WEIGHT =	4811
SPAN 6 – RAILING – EPOXY COATED BARS																	
6ER 401	28	7	10	109	2	9	0	11									147
6ER402	28	8	9	180	3	4	1	6	0	6	2	7	0	6			—
6ER403	360	7	0	110	2	9	0	11									1683
6ER404	360	3	4	109	0	5	1	0									—
6ER405	180	5	3	109	0	8½	1	8									—
6ER 501	60	30	0	STR													—
6ER502	12	15	9	STR													—
6ER503	12	4	7	105	2	0	0	10									—
6ER504	2	12	8	105	6	2	0	7									—
6ER505	2	12	10	105	6	3	0	7									—
6ER 701	32	30	0	STR													—
6ER702	8	31	0	STR													—
6ER703	16	11	8	STR													—
6ER 801	90	11	4	174	5	0	0	2½	1	4							2723
																TOTAL WEIGHT =	4553
SPAN 7 – RAILING – EPOXY COATED BARS																	
7ER 401	28	7	10	109	2	9	0	11									147
7ER402	28	8	9	180	3	4	1	6	0	6	2	7	0	6			—
7ER403	360	7	0	110	2	9	0	11									1683
7ER404	360	3	4	109	0	5	1	0									—
7ER405	180	5	3	109	0	8½	1	8									—
7ER 501	60	30	0	STR													—
7ER502	12	15	9	STR													—
7ER503	12	4	7	105	2	0	0	10									—
7ER504	2	12	8	105	6	2	0	7									—
7ER505	2	12	10	105	6	3	0	7									—
7ER 701	32	30	0	STR													—
7ER702	8	31	0	STR													—
7ER703	16	11	8	STR													—
7ER 801	90	11	4	174	5	0	0	2½	1	4							2723
																TOTAL WEIGHT =	4553
SPAN 8 – RAILING – EPOXY COATED BARS																	
8ER 401	28	7	10	109	2	9	0	11									147
8ER402	28	8	9	180	3	4	1	6	0	6	2	7	0	6			—
8ER403	360	7	0	110	2	9	0	11									1683
8ER404	360	3	4	109	0	5	1	0									—
8ER405	180	5	3	109	0	8½	1	8									—
8ER 501	60	30	0	STR													—
8ER502	12	15	9	STR													—
8ER503	12	4	7	105	2	0	0	10									—
8ER504	2	12	8	105	6	2	0	7									—
8ER505	2	12	10	105	6	3	0	7									—
8ER 701	32	30	0	STR													—
8ER702	8	31	0	STR													—

BAR BENDING DIAGRAMS

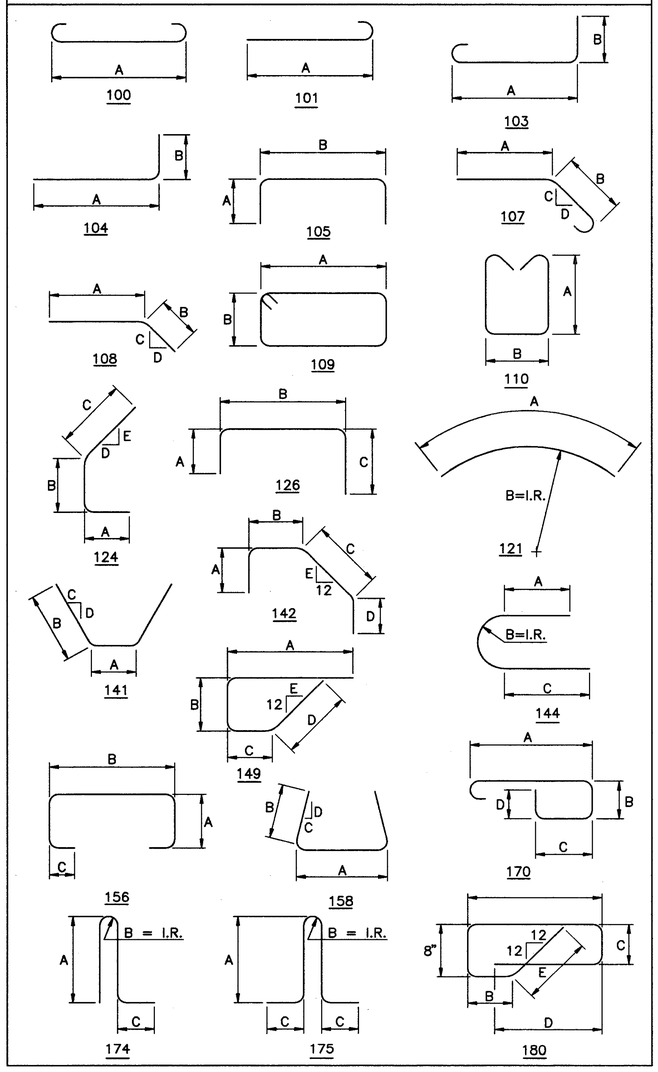

COUNTY BRIDGE NO. 84

REINFORCING STEEL SAMPLES

REFER TO CMS SECTIONS 106.03, 700, 709.00, AND 709.01. SUFFICIENT ADDITIONAL REINFORCING STEEL SHALL BE PROVIDED FOR SAMPLING. RANDOM SAMPLES SHALL BE REPLACED IN THE STRUCTURES BY THE ADDITIONAL STEEL, SPLICED IN ACCORDANCE WITH 509.08

HOWARD NEEDLES TAMMEN & BERGENDOFF
ARCHITECTS ENGINEERS PLANNERS
HNTB

REINFORCEMENT SCHEDULE
UPPER DECK RAILINGS
BR. NO. CUY – 6 – 1499
REHABILITATION OF
VETERANS MEMORIAL BRIDGE
(U.S. 6, 20, 42 & S.R. 3 OVER CUYAHOGA RIVER)
CLEVELAND CUYAHOGA COUNTY OHIO

DRAWN J.L.V.	TRACED J.L.V.	CHECKED B.E.B.	REVIEWED C.A.B.	REVISED
DATE 4/13/94	DATE 4/13/94	DATE 4/18/94	DATE 6/01/94	SHEET 268/270

\1646\CONCRETE\RSRAILS1.DWG

FHWA REGION	STATE	PROJECT	
5	OHIO		

40A
412

CUYAHOGA COUNTY
CUY – 6 – 14.99

BAR SCHEDULE

MARK	NUMBER REQ'D	LENGTH FT.	LENGTH IN.	TYPE	A FT.	A IN.	B FT.	B IN.	C FT.	C IN.	D FT.	D IN.	E FT.	E IN.	SER. INCR. FT.	SER. INCR. IN.	WEIGHT (LBS.)
SPAN 8 – RAILING – EPOXY COATED BARS (CONTINUED)																	
8ER703	16	11	8	STR													——
8ER 801	90	11	4	174	5	0	0	2½	1	4							2723
																TOTAL WEIGHT =	4553
SPAN 9 – RAILING – EPOXY COATED BARS																	
9ER 401	28	7	10	109	2	9	0	11									147
9ER402	28	8	9	180	3	4	1	6	0	6	2	7	0	6			——
9ER403	308	7	0	110	2	9	0	11									1440
9ER404	308	3	4	109	0	5	1	0									——
9ER405	156	5	3	109	0	8½	1	8									——
9ER 501	48	30	0	STR													——
9ER502	12	18	6	STR													——
9ER503	12	4	7	105	2	0	0	10									——
9ER504	2	12	10	105	6	3	0	7									——
9ER505	2	12	10	105	6	3	0	7									——
9ER 701	24	30	0	STR													——
9ER702	8	31	0	STR													——
9ER703	16	11	8	STR													——
9ER 801	78	11	4	174	5	0	0	2½	1	4							2360
																TOTAL WEIGHT =	3947
SPAN 10 – RAILING – EPOXY COATED BARS																	
10ER 401	28	7	10	109	2	9	0	11									147
10ER402	28	8	9	180	3	4	1	6	0	6	2	7	0	6			——
10ER403	282	7	0	110	2	9	0	11									1319
10ER404	282	3	4	109	0	5	1	0									——
10ER405	144	5	3	109	0	8½	1	8									——
10ER 501	48	30	0	STR													——
10ER502	12	8	0	STR													——
10ER503	12	4	7	105	2	0	0	10									——
10ER504	2	12	10	105	6	3	0	7									——
10ER505	2	12	8	105	6	2	0	7									——
10ER 701	24	30	0	STR													——
10ER702	8	20	9	STR													——
10ER703	16	11	8	STR													——
10ER 801	72	11	4	174	5	0	0	2½	1	4							2179
																TOTAL WEIGHT =	3645
SPAN 11 – RAILING – EPOXY COATED BARS																	
11ER 401	33	7	10	109	2	9	0	11									173
11ER402	33	8	9	180	3	4	1	6	0	6	2	7	0	6			——
11ER403	190	7	0	110	2	9	0	11									888
11ER404	190	3	4	109	0	5	1	0									——
11ER405	90	5	3	109	0	8½	1	8									——
11ER406	12	3	3	109	0	8½	0	8									——
11ER 501	30	30	0	STR													——
11ER502	6	17	9	STR													——
11ER503	9	4	7	105	2	0	0	10									——
11ER504	2	12	8	105	6	2	0	7									——
11ER505	6	11	7	STR													——
11ER506	1	23	6	105	11	7	0	7									——
11ER 701	16	30	0	STR													——
11ER702	4	16	6	STR													——
11ER703	4	11	7	STR													——
11ER704	4	28	9	STR													——
11ER705	4	11	3	STR													——
11ER 801	51	11	4	174	5	0	0	2½	1	4							1543
																TOTAL WEIGHT =	2604
SPAN 12 – RAILING – EPOXY COATED BARS																	
12ER 401	38	7	10	109	2	9	0	11									199
12ER402	38	8	9	180	3	4	1	6	0	6	2	7	0	6			——

BAR SCHEDULE

MARK	NUMBER REQ'D	LENGTH FT.	LENGTH IN.	TYPE	A FT.	A IN.	B FT.	B IN.	C FT.	C IN.	D FT.	D IN.	E FT.	E IN.	SER. INCR. FT.	SER. INCR. IN.	WEIGHT (LBS.)
SPAN 12 – RAILING – EPOXY COATED BARS (CONTINUED)																	
12ER403	282	7	0	110	2	9	0	11									1319
12ER404	282	3	4	109	0	5	1	0									——
12ER405	120	5	3	109	0	8½	1	8									——
12ER406	24	3	3	109	0	8½	0	8									——
12ER 501	36	30	0	STR													——
12ER502	12	27	0	STR													——
12ER503	6	4	7	105	2	0	0	10									——
12ER504	1	23	6	105	11	7	0	7									——
12ER505	6	11	7	STR													——
12ER506	6	11	3	STR													——
12ER507	1	22	10	105	11	3	0	7									——
12ER 701	24	30	0	STR													——
12ER702	8	35	0	STR													——
12ER703	4	11	7	STR													——
12ER704	4	11	3	STR													——
12ER 801	72	11	4	174	5	0	0	2½	1	4							2179
																TOTAL WEIGHT =	3697
SPAN 13 – RAILING – EPOXY COATED BARS																	
13ER 401	33	7	10	109	2	9	0	11									173
13ER402	33	8	9	180	3	4	1	6	0	6	2	7	0	6			——
13ER403	164	7	0	110	2	9	0	11									767
13ER404	164	3	4	109	0	5	1	0									——
13ER405	78	5	3	109	0	8½	1	8									——
13ER406	12	3	3	109	0	8½	0	8									——
13ER 501	24	30	0	STR													——
13ER502	6	19	0	STR													——
13ER503	9	4	7	105	2	0	0	10									——
13ER504	2	12	4	105	6	0	0	7									——
13ER505	6	7	6	STR													——
13ER506	6	11	2	105													——
13ER507	1	22	8	105	11	2	0	7									——
13ER 701	12	30	0	STR													——
13ER702	4	18	0	STR													——
13ER703	8	11	0	STR													——
13ER704	4	31	9	STR													——
13ER705	4	11	2	STR													——
13ER 801	45	11	4	174	5	0	0	2½	1	4							1362
																TOTAL WEIGHT =	2302
EAST SIDE STATION – RAILING – EPOXY COATED BARS																	
ESER 401	37	7	10	109	2	9	0	11									194
ESER402	48	8	9	180	3	4	1	6	0	6	2	7	0	6			——
ESER403	538	7	1	110	2	9	0	11									2516
ESER404	586	3	4	109	0	5	1	0									——
ESER405	248	5	3	109	0	8½	1	8									——
ESER406	13	3	3	109	0	8½	0	8									——
ESER407	6	5	2	109	1	8	0	8									——
ESER408	6	6	0	109	2	1	0	8									——
ESER409	11	7	10	109	2	9	0	11									——
ESER410	48	7	1	110	2	9	0	11									——
ESER 501	74	30	0	STR													——
ESER502	6	7	9	STR													——
ESER503	10	4	7	105	2	0	0	10									——
ESER504	2	12	4	105	6	0	0	7									——
ESER505	6	3	1	104	2	1	1	1									——
ESER506	3	3	11	104	2	0	2	0									——
ESER507	12	16	0	STR													——
ESER508	3	5	8	104	4	11	0	10									18
ESER509	3	6	0	127	1	1	2	1	2	1	1	1					——
ESER510	6	24	6	STR													——
ESER 511	6	10	0	108	5	0	5	0	8¾		12						——
ESER512	2	5	2	108	2	7	2	7	8¾		12						——
ESER513	6	14	0	STR													——
ESER514	6	8	10	108	4	5	4	5	8¾		12						——

BAR BENDING DIAGRAMS

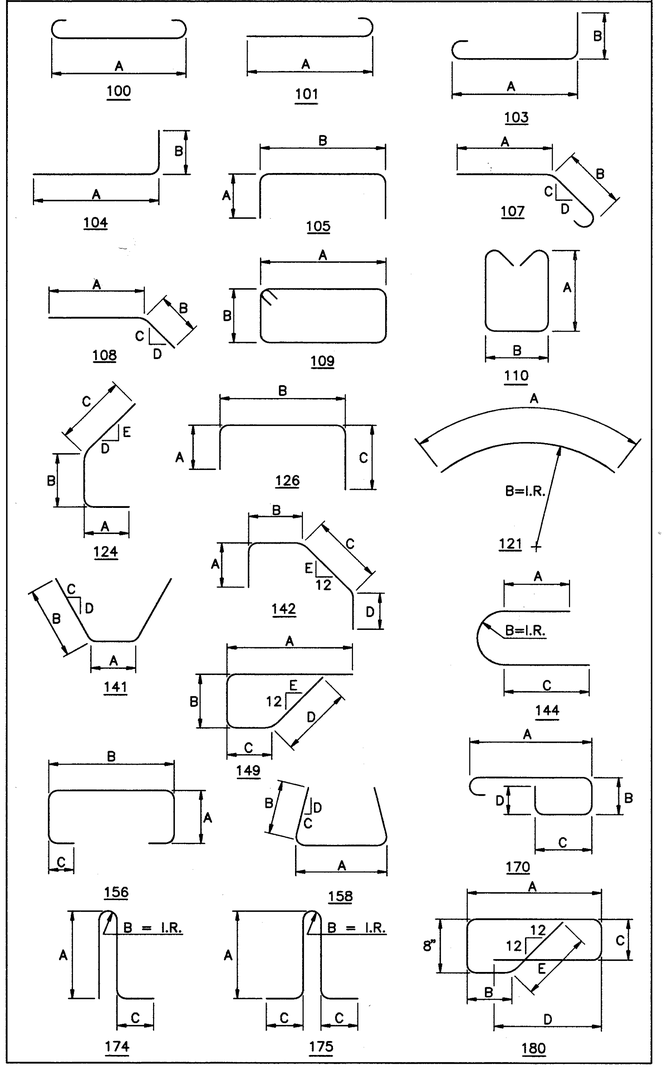

COUNTY BRIDGE NO. 84

REINFORCING STEEL SAMPLES

REFER TO CMS SECTIONS 106.03, 700, 709.00, AND 709.01. SUFFICIENT ADDITIONAL REINFORCING STEEL SHALL BE PROVIDED FOR SAMPLING. RANDOM SAMPLES SHALL BE REPLACED IN THE STRUCTURES BY THE ADDITIONAL STEEL, SPLICED IN ACCORDANCE WITH 509.08

HOWARD NEEDLES TAMMEN & BERGENDOFF
ARCHITECTS ENGINEERS PLANNERS
HNTB

REINFORCEMENT SCHEDULE
UPPER DECK RAILINGS
BR. NO. CUY – 6 – 1499
REHABILITATION OF
VETERANS MEMORIAL BRIDGE
(U.S. 6, 20, 42 & S.R. 3 OVER CUYAHOGA RIVER)

CLEVELAND CUYAHOGA COUNTY OHIO

DRAWN J.L.V.	TRACED J.L.V.	CHECKED B.E.B.	REVIEWED C.A.B.	REVISED
DATE 4/13/94	DATE 4/13/94	DATE 4/18/94	DATE 6/01/94	SHEET 269/270

\11646\CONCRETE\RSRAIL51.DWG

FHWA REGION	STATE	PROJECT	
5	OHIO		

4048
412

CUYAHOGA COUNTY
CUY – 6 – 14.99

BAR SCHEDULE

MARK	NUMBER REQ'D	LENGTH FT.	LENGTH IN.	TYPE	A FT.	A IN.	B FT.	B IN.	C FT.	C IN.	D FT.	D IN.	E FT.	E IN.	SER. INCR. FT.	SER. INCR. IN.	WEIGHT (LBS.)
EAST SIDE STATION – RAILING – EPOXY COATED BARS (CONTINUED)																	
ESER515	1	4	7	105	1	1	2	8									5
ESER516	2	4	0	108	2	0	2	0	8¾		12						—
ESER517	6	18	6	STR													—
ESER518	8	12	0	STR													—
ESER519	1	12	8	105	6	2	0	7									—
ESER520	6	29	0	STR													—
ESER 521	2	6	8	STR													—
ESER522	16	21	0	STR													350
ESER523	82	6	0	STR													513
ESER 701	48	30	0	STR													—
ESER702	4	31	9	STR													—
ESER703	8	11	3	STR													—
ESER704	8	20	9	104	16	3	4	8									—
ESER705	4	15	4	108	7	8	7	8	8¾		12						—
ESER706	4	16	9	STR													—
ESER707	4	14	2	108	7	1	7	1	8¾		12						—
ESER708	4	18	6	STR													—
ESER709	4	13	3	STR													—
ESER710	4	12	3	STR													—
ESER 711	4	31	9	STR													—
ESER 801	132	11	4	174	5	0	0	2½	1	4							3994
ESER802	9	10	3	144	4	8½	0	2½									—
																TOTAL WEIGHT =	7590

BAR SCHEDULE

MARK	NUMBER REQ'D	LENGTH FT.	LENGTH IN.	TYPE	A FT.	A IN.	B FT.	B IN.	C FT.	C IN.	D FT.	D IN.	E FT.	E IN.	SER. INCR. FT.	SER. INCR. IN.	WEIGHT (LBS.)

BAR BENDING DIAGRAMS

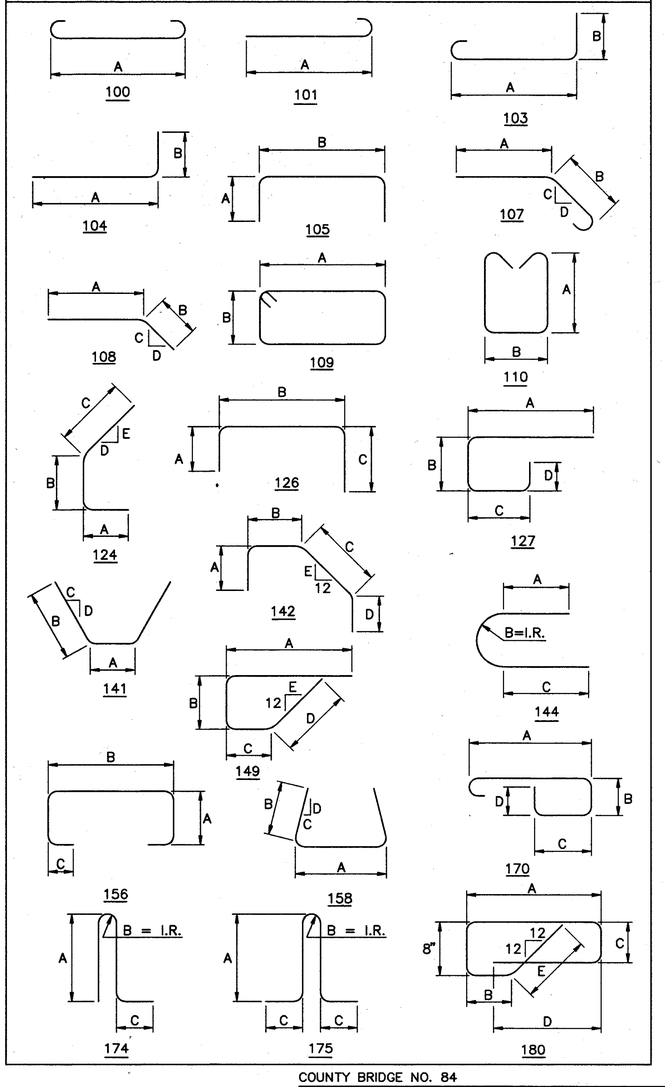

REINFORCING STEEL SAMPLES

REFER TO CMS SECTIONS 106.03, 700, 709.00, AND 709.01. SUFFICIENT ADDITIONAL REINFORCING STEEL SHALL BE PROVIDED FOR SAMPLING. RANDOM SAMPLES SHALL BE REPLACED IN THE STRUCTURES BY THE ADDITIONAL STEEL, SPLICED IN ACCORDANCE WITH 509.08

COUNTY BRIDGE NO. 84

HOWARD NEEDLES TAMMEN & BERGENDOFF
ARCHITECTS ENGINEERS PLANNERS
HNTB

REINFORCEMENT SCHEDULE
UPPER DECK RAILINGS
BR. NO. CUY – 6 – 1499
REHABILITATION OF
VETERANS MEMORIAL BRIDGE
(U.S. 6, 20, 42 & S.R. 3 OVER CUYAHOGA RIVER)

CLEVELAND CUYAHOGA COUNTY OHIO

DRAWN	TRACED	CHECKED	REVIEWED	REVISED
J.L.V.	J.L.V.	B.E.B.	C.A.B.	
DATE 4/13/94	DATE 4/13/94	DATE 4/18/94	DATE 5/01/94	SHEET 270/270

\11646\CONCRETE\RSRAILS1.DWG

FHWA REGION	STATE	PROJECT	
5	OHIO	BHF - 83(13)	

CUYAHOGA COUNTY
CUY - 6 - 14.99

405/412

1/8

STATE OF OHIO
DEPARTMENT OF TRANSPORTATION
CUY-6-14.99
REHABILITATION OF
VETERANS MEMORIAL BRIDGE
CITY OF CLEVELAND
CUYAHOGA COUNTY

RIGHT OF WAY ONLY

ACQUIRING AGENCY: STATE OF OHIO

CONVENTIONAL SIGNS

County Line
Township Line
Section Line
Corporation Line or
Fence Line (existing) (proposed)
Centerline
Trees , Stumps (to be removed)
Utility Poles: Telephone , Power , Light , General

Proposed Right of Way RW
Existing Right of Way RW
Property Line PL (in existing fence) PL
Railroad
Guardrail (existing) (proposed)

RIGHT OF WAY

INDEX OF SHEETS

TITLE SHEET
CENTERLINE PLAT 1
PROPERTY MAPS 2-3
SUMMARY OF ADDITIONAL RIGHT OF WAY REQUIRED 4
RIGHT OF WAY PLANS 5-7

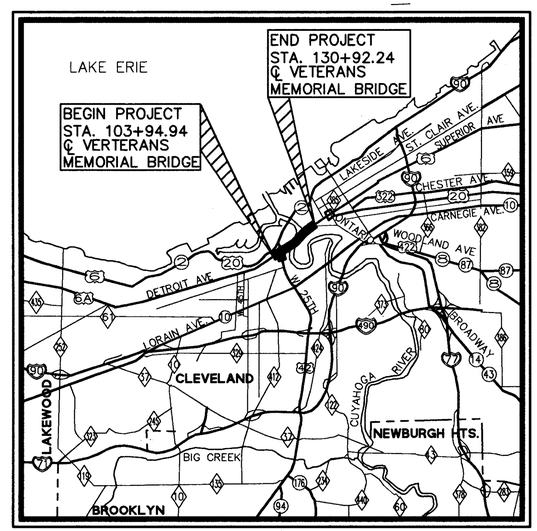

LOCATION MAP

SCALE IN MILES

1 0 1 2 3

Portion to be improved
Interstate, U.S., And State Routes
County Roads

SCALES

RIGHT OF WAY PLAN 0 20 40

1993 SPECIFICATIONS

The standard specifications of the State of Ohio, Department of Transportation, including changes and supplemental specifications listed in the proposal shall govern this improvement.

I hereby approve these plans and declare that the making of this improvement will require the closing to traffic of the highway and that detours will be provided as indicated on sheet 73-87.

APPROVED: _____
DATE: _____ DIRECTOR, DEPARTMENT OF TRANSPORTATION

APPROVED: _____
DATE: _____ ASSISTANT DEPUTY DIRECTOR, REAL ESTATE ADMINISTRATION

UNDERGROUND UTILITIES

TWO WORKING DAYS
BEFORE YOU DIG
CALL 800-362-2764 (Toll Free)
OHIO UTILITIES PROTECTION SERVICE
NON-MEMBERS
MUST BE CALLED DIRECTLY

Plans Prepared By:
HOWARD NEEDLES TAMMEN & BERGENDOFF
ARCHITECTS ENGINEERS PLANNERS HNTB

Project:
Date of Letting _____ 19__, Contract No. _____

DEPARTMENT OF TRANSPORTATION
FEDERAL HIGHWAY ADMINISTRATION

APPROVED:

DIVISION ADMINISTRATOR DATE

RWTSHEET

FHWA REGION	STATE	PROJECT	
5	OHIO		

406/412

CUYAHOGA COUNTY
CUY-6-14.99

2/8

CENTERLINE SURVEY PLAT

CUY – 6 – 14.99

CUYAHOGA COUNTY
CITY OF CLEVELAND
ORIGINAL BROOKLYN TOWNSHIP LOT NOS. 51 & 70
ORIGINAL 2 ACRE LOT NOS. 206 & 73

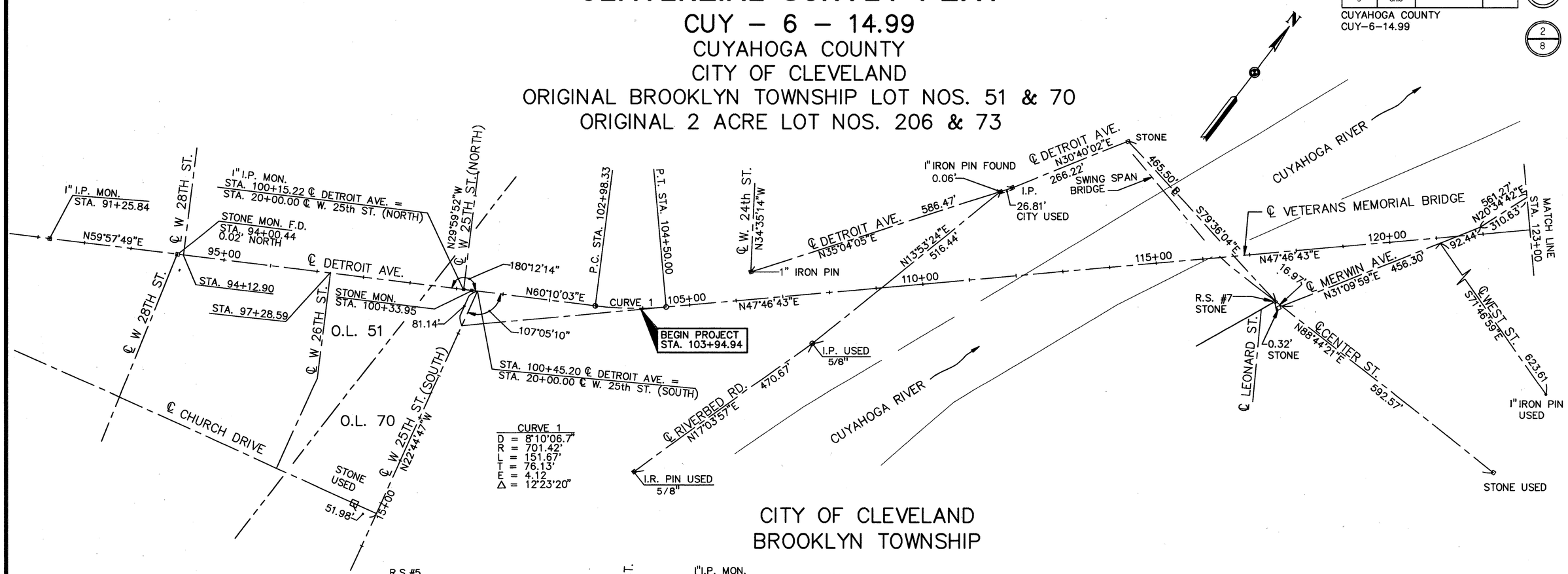

CITY OF CLEVELAND
BROOKLYN TOWNSHIP

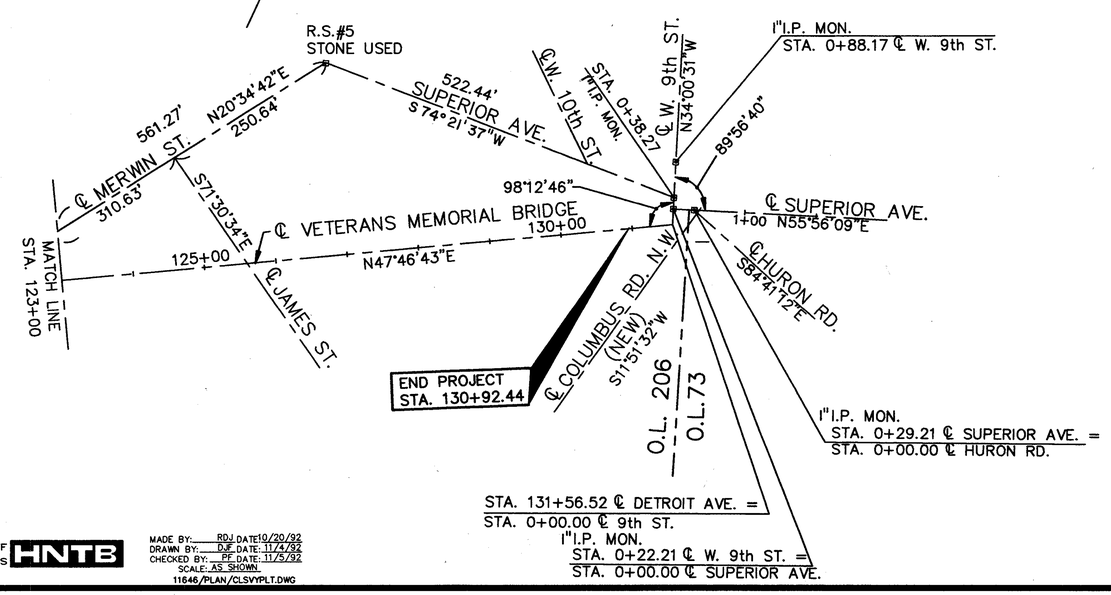

GRAPHIC SCALE
100 0 50 100 200 400
(IN FEET)

I HEREBY CERTIFY THAT THIS PLAT IS A TRUE DELINEATION OF A SURVEY MADE FOR THE OHIO DEPARTMENT OF TRANSPORTATION IN 1992 BY WESTERN RESERVE ENGINEERING AND SURVEYING CO.

STATE OF OHIO
WILLIAM J. VONDRA
5849
REGISTERED
SURVEYOR

William J. Vondra 5/13/92
PROFESSIONAL SURVEYOR NO. 5849

THE WESTERN RESERVE ENGINEERING & SURVEYING COMPANY.
DIVISION OF W.R.E.S.

HOWARD NEEDLES TAMMEN & BERGENDOFF
ARCHITECTS ENGINEERS PLANNERS
HNTB

MADE BY: RDJ DATE 10/20/92
DRAWN BY: DJF DATE: 11/4/92
CHECKED BY: PF DATE: 11/5/92
SCALE: AS SHOWN
11646/PLAN/CLSVYPLT.DWG

FHWA REGION	STATE	PROJECT	
5	OHIO		

CUYAHOGA COUNTY
CUY-6-14.99

407/412

3/8

PROPERTY MAP
CUY – 6 – 14.99
CUYAHOGA COUNTY
CITY OF CLEVELAND
ORIGINAL LOT NOS. 51, 70, 206 & 73

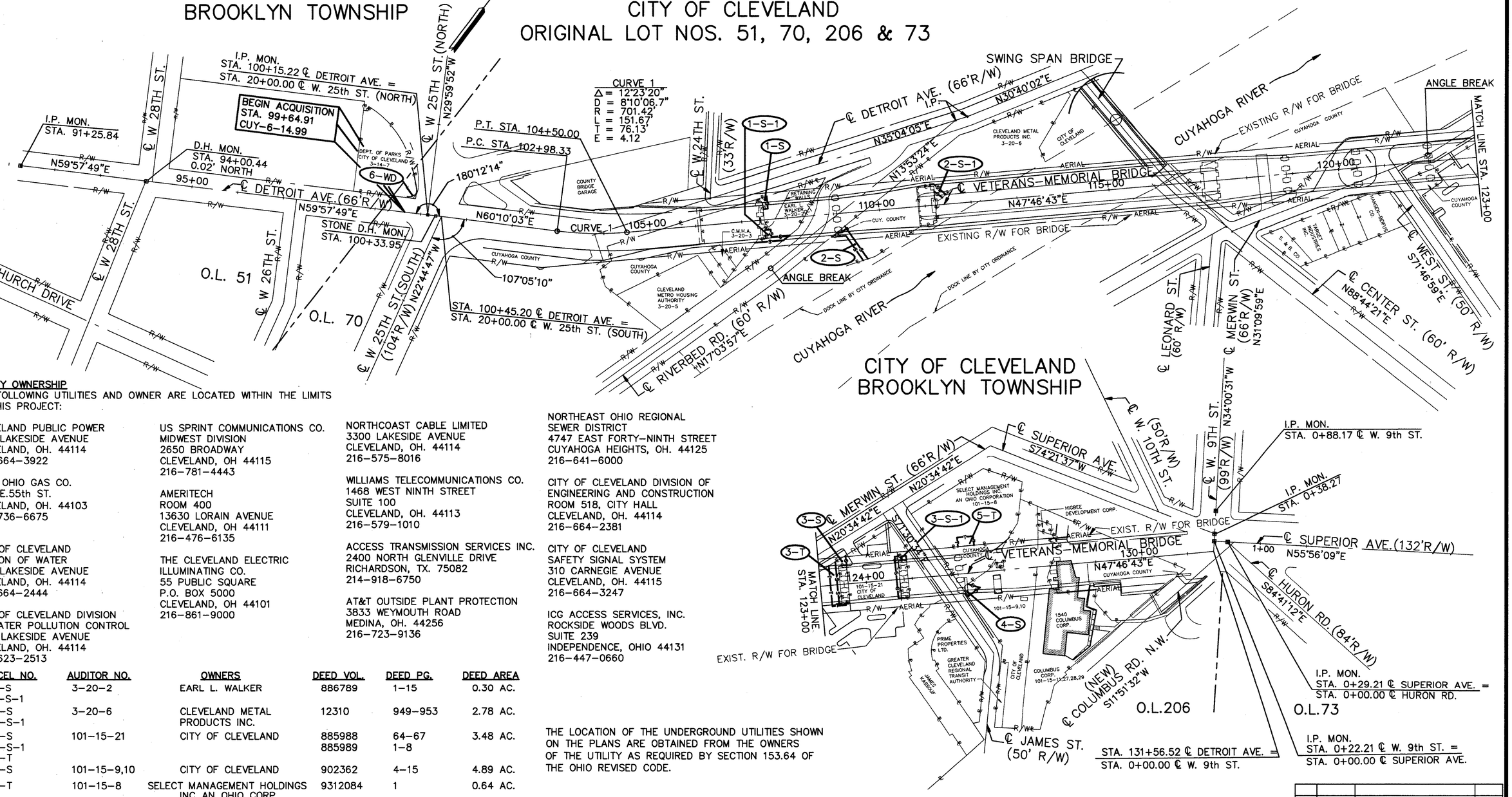

UTILITY OWNERSHIP
THE FOLLOWING UTILITIES AND OWNER ARE LOCATED WITHIN THE LIMITS OF THIS PROJECT:

CLEVELAND PUBLIC POWER
1201 LAKESIDE AVENUE
CLEVELAND, OH. 44114
216–664–3922

EAST OHIO GAS CO.
1201 E.55th ST.
CLEVELAND, OH. 44103
216–736–6675

CITY OF CLEVELAND
DIVISION OF WATER
1201 LAKESIDE AVENUE
CLEVELAND, OH. 44114
216–664–2444

CITY OF CLEVELAND DIVISION
OF WATER POLLUTION CONTROL
1825 LAKESIDE AVENUE
CLEVELAND, OH. 44114
216–623–2513

US SPRINT COMMUNICATIONS CO.
MIDWEST DIVISION
2650 BROADWAY
CLEVELAND, OH 44115
216–781–4443

AMERITECH
ROOM 400
13630 LORAIN AVENUE
CLEVELAND, OH 44111
216–476–6135

THE CLEVELAND ELECTRIC
ILLUMINATING CO.
55 PUBLIC SQUARE
P.O. BOX 5000
CLEVELAND, OH 44101
216–861–9000

NORTHCOAST CABLE LIMITED
3300 LAKESIDE AVENUE
CLEVELAND, OH. 44114
216–575–8016

WILLIAMS TELECOMMUNICATIONS CO.
1468 WEST NINTH STREET
SUITE 100
CLEVELAND, OH. 44113
216–579–1010

ACCESS TRANSMISSION SERVICES INC.
2400 NORTH GLENVILLE DRIVE
RICHARDSON, TX. 75082
214–918–6750

AT&T OUTSIDE PLANT PROTECTION
3833 WEYMOUTH ROAD
MEDINA, OH. 44256
216–723–9136

NORTHEAST OHIO REGIONAL
SEWER DISTRICT
4747 EAST FORTY–NINTH STREET
CUYAHOGA HEIGHTS, OH. 44125
216–641–6000

CITY OF CLEVELAND DIVISION OF
ENGINEERING AND CONSTRUCTION
ROOM 518, CITY HALL
CLEVELAND, OH. 44114
216–664–2381

CITY OF CLEVELAND
SAFETY SIGNAL SYSTEM
310 CARNEGIE AVENUE
CLEVELAND, OH. 44115
216–664–3247

ICG ACCESS SERVICES, INC.
ROCKSIDE WOODS BLVD.
SUITE 239
INDEPENDENCE, OHIO 44131
216–447–0660

PARCEL NO.	AUDITOR NO.	OWNERS	DEED VOL.	DEED PG.	DEED AREA
1–S 1–S–1	3–20–2	EARL L. WALKER	886789	1–15	0.30 AC.
2–S 2–S–1	3–20–6	CLEVELAND METAL PRODUCTS INC.	12310	949–953	2.78 AC.
3–S 3–S–1 3–T	101–15–21	CITY OF CLEVELAND	885988 885989	64–67 1–8	3.48 AC.
4–S	101–15–9,10	CITY OF CLEVELAND	902362	4–15	4.89 AC.
5–T	101–15–8	SELECT MANAGEMENT HOLDINGS INC.,AN OHIO CORP.	9312084	1	0.64 AC.
6–WD	3–14–7	CITY OF CLEVELAND	2314	99	NOT RECORDED

THE LOCATION OF THE UNDERGROUND UTILITIES SHOWN ON THE PLANS ARE OBTAINED FROM THE OWNERS OF THE UTILITY AS REQUIRED BY SECTION 153.64 OF THE OHIO REVISED CODE.

GRAPHIC SCALE
100 0 50 100 200 400
(IN FEET)

NOTE:
FOR PARCELS 7–WD AND 7–T, TOWER CITY PROPERTIES, SEE PROPERTY MAP, SHEET 3 OF 7

NO.	DATE	DESCRIPTION	BY
1	6/9/94	REVISED PARCELS 2–S–1, 4–S	RDJ

HOWARD NEEDLES TAMMEN & BERGENDOFF
ARCHITECTS ENGINEERS PLANNERS
HNTB

MADE BY: RDJ DATE 10/20/92
DRAWN BY: DJF DATE: 11/4/92
CHECKED BY: PE DATE: 11/5/92
SCALE: AS SHOWN
11646\PLAN\PROP–MAP.DWG

PROPERTY MAP

FHWA REGION	STATE	PROJECT	
5	OHIO		

CUYAHOGA COUNTY
CUY-6-14.99

408/412

4/8

PROPERTY MAP
CUY – 6 – 14.99
CUYAHOGA COUNTY
CITY OF CLEVELAND
ORIGINAL TWO ACRE LOTS

CITY OF CLEVELAND
BROOKLYN TOWNSHIP
PART OF TWO ACRE LOTS
NOS. 73 TO 84
NOS. 206 TO 212

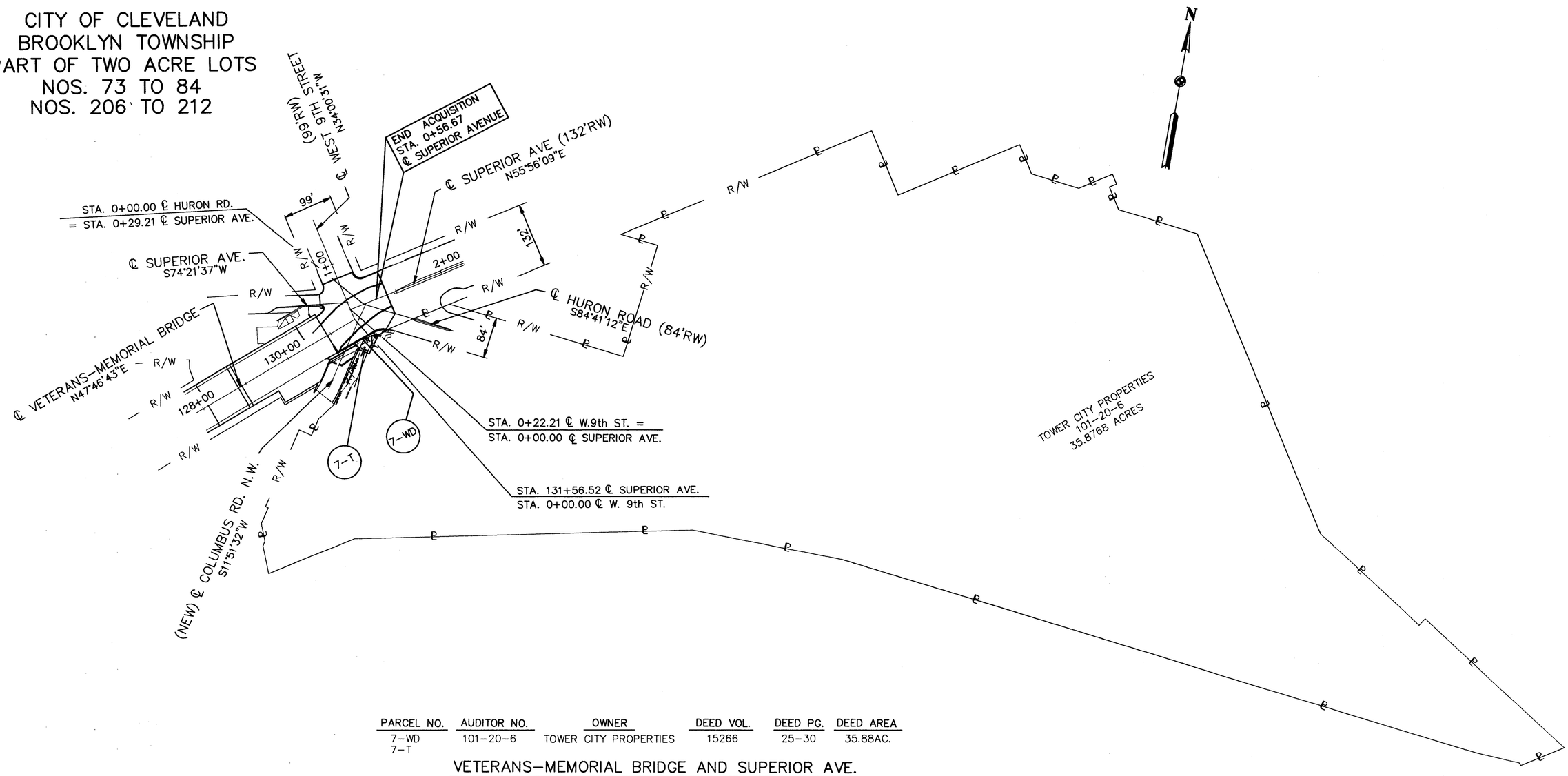

PARCEL NO.	AUDITOR NO.	OWNER	DEED VOL.	DEED PG.	DEED AREA
7-WD 7-T	101-20-6	TOWER CITY PROPERTIES	15266	25-30	35.88AC.

VETERANS-MEMORIAL BRIDGE AND SUPERIOR AVE.

GRAPHIC SCALE
100 0 50 100 200 400
(IN FEET)

NOTE:
FOR PARCELS 1-S, 1-S-1, 2-S, 2-S-1, 3-S, 3-S-1, 3-T, 4-S, 5-T, 6-WD, SEE PROPERTY MAP 2 OF 7.

NO.	DATE	DESCRIPTION	BY

HOWARD NEEDLES TAMMEN & BERGENDOFF
ARCHITECTS ENGINEERS PLANNERS HNTB

MADE BY: RDJ DATE: 2/3/94
DRAWN BY: RDJ DATE: 2/3/94
CHECKED BY: PF DATE: 3/94
SCALE: AS SHOWN
11646\PLAN\PR-MAP

TOTAL NUMBER OF
7 OWNERSHIPS
TOTAL TAKES
OWNERSHIPS WITH STRUCTURES INVOLVED
OWNERSHIPS WITH "P" ITEMS

FHWA REGION	STATE	PROJECT	
5	OHIO		

409/412

CUYAHOGA COUNTY
CUY-6-14.99

5/8

SUMMARY OF ADDITIONAL RIGHT OF WAY REQUIRED

AUD. NO.	PARCEL	OWNER	SHEET NO.	OWNERS RECORD BOOK	OWNERS RECORD PAGE	RECORD AREA	TOTAL P.R.O.	GROSS TAKE	P.R.O. IN TAKE	NET TAKE	STRUC-TURE	NET RESIDUE LEFT	NET RESIDUE RIGHT	TYPE FUND	REMARKS AND PERSONALTY	AS ACQUIRED BOOK	AS ACQUIRED PAGE
3-20-2	1-S	EARL L. WALKER (PARCEL 12)	5	886789	1-15	0.30 Ac.	–	363 S.F.	–	363 S.F.	–	–	–		CONSTRUCT STORM SEWER TO OUTLET BRIDGE SCUPPERS		
	1-S-1		5				–	788 S.F.	–	788 S.F.	–	–	–		CONSTRUCT STORM SEWER TO OUTLET BRIDGE SCUPPERS		
3-20-6	2-S	CLEVELAND METAL PRODUCTS INC.	5	12310	949-953	2.78 Ac.	–	1021 S.F.	–	1021 S.F.	–	–	–		CONSTRUCT STORM SEWER TO OUTLET BRIDGE SCUPPERS		
	2-S-1		5				–	356 S.F.	–	356 S.F.	–	–	–		CONSTRUCT STORM SEWER TO OUTLET BRIDGE SCUPPERS		
101-15-21	3-S	CITY OF CLEVELAND	6	885988	64-67	3.48 Ac.	–	864 S.F.	–	864 S.F.	–	–	–		CONSTRUCT STORM SEWER TO OUTLET BRIDGE SCUPPERS		
	3-S-1		6	885989	1-8		–	818 S.F.	–	818 S.F.	–	–	–		CONSTRUCT STORM SEWER TO OUTLET BRIDGE SCUPPERS		
	3-T		6				–	1462 S.F.	–	1462 S.F.	–	–	–		REGRADING AREA		
101-15-9,10	4-S	CITY OF CLEVELAND	6	902362	4-15	4.89 Ac.	–	491 S.F.	–	491 S.F.	–	–	–		CONSTRUCT STORM SEWER TO OUTLET BRIDGE SCUPPERS		
101-15-8	5-T	SELECT MANAGEMENT HOLDINGS INC. AN OHIO CORPORATION	6	9312084	1	0.64 Ac.	–	700 S.F.		700 S.F.	–	–	–		REGRADING AREA		
3-14-7	6-WD	CITY OF CLEVELAND (DEPT. OF PARKS)	7	2314	99	N.R.	–	268 S.F.	–	268 S.F.	–	–	–				
				2181	557												
				2186	192												
				2292	113												
				2165	246												
101-20-6	7-WD	TOWER CITY PROPERTIES	7	15266	25-30	35.88AC.	–	251 S.F.	–	251 S.F.	–	–	35.87AC.				
	7-T		7				–	622 S.F.	–	622 S.F.	–	–	–		CONSTRUCTION LIMITS		

REV.	DATE	DESCRIPTION
1	6/9/94	Parcels 2-S-1, 4-S, 6-WD

HOWARD NEEDLES TAMMEN & BERGENDOFF
ARCHITECTS ENGINEERS PLANNERS
HNTB

MADE BY: RDJ DATE: 10-3-91
DRAWN BY: RDJ DATE: 10-3-91
CHECKED BY: PF DATE: 10-5-91
SCALE: –
11646\PLAN\ROWSUM.DWG

FHWA REGION	STATE	PROJECT	
5	OHIO		

410/412

6/8

CUYAHOGA COUNTY
CUY-6-14.99

CITY OF CLEVELAND
BROOKLYN TOWNSHIP
O.L. 70

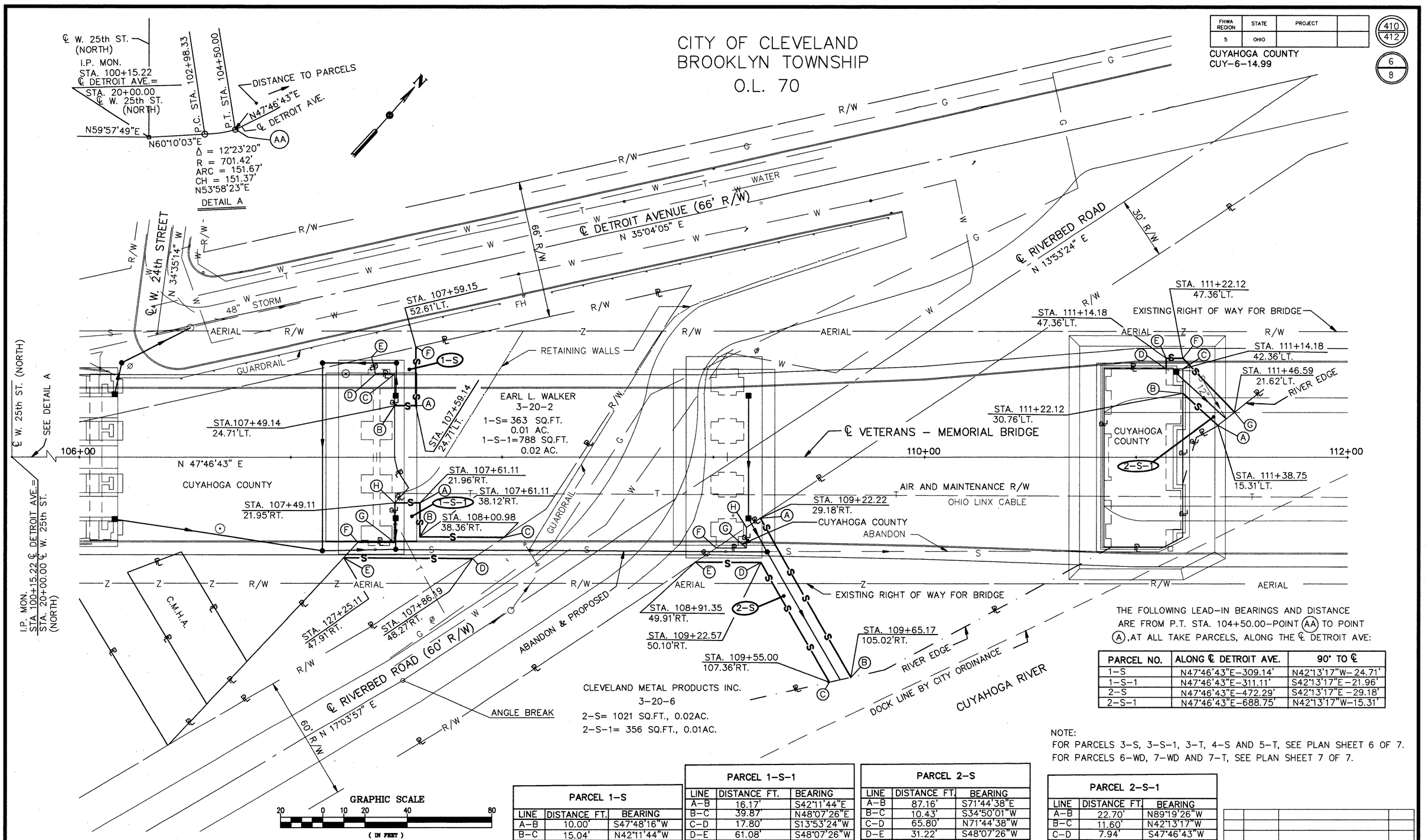

THE FOLLOWING LEAD-IN BEARINGS AND DISTANCE ARE FROM P.T. STA. 104+50.00-POINT (AA) TO POINT (A), AT ALL TAKE PARCELS, ALONG THE ℄ DETROIT AVE:

PARCEL NO.	ALONG ℄ DETROIT AVE.	90° TO ℄
1-S	N47°46'43"E-309.14'	N42°13'17"W-24.71'
1-S-1	N47°46'43"E-311.11'	S42°13'17"E-21.96'
2-S	N47°46'43"E-472.29'	S42°13'17"E-29.18'
2-S-1	N47°46'43"E-688.75'	N42°13'17"W-15.31'

NOTE:
FOR PARCELS 3-S, 3-S-1, 3-T, 4-S AND 5-T, SEE PLAN SHEET 6 OF 7.
FOR PARCELS 6-WD, 7-WD AND 7-T, SEE PLAN SHEET 7 OF 7.

PARCEL 1-S

LINE	DISTANCE FT.	BEARING
A-B	10.00'	S47°48'16"W
B-C	15.04'	N42°11'44"W
C-D	9.08'	S47°48'16"W
D-E	8.34'	N54°54'51"W
E-F	21.44'	N35°04'05"E
F-A	27.90'	S42°11'44"E

PARCEL 1-S-1

LINE	DISTANCE FT.	BEARING
A-B	16.17'	S42°11'44"E
B-C	39.87'	N48°07'26"E
C-D	17.80'	S13°53'24"W
D-E	61.08'	S48°07'26"W
E-F	9.77'	N00°32'08"E
F-G	17.36'	N47°48'16"E
G-H	18.79'	N42°11'44"W
H-A	12.00'	N47°48'16"E

PARCEL 2-S

LINE	DISTANCE FT.	BEARING
A-B	87.16'	S71°44'38"E
B-C	10.43'	S34°50'01"W
C-D	65.80'	N71°44'38"W
D-E	31.22'	S48°07'26"W
E-F	11.94'	N13°53'24"E
F-G	14.42'	N47°46'43"E
G-H	9.69'	N42°13'17"W
H-A	7.87'	N13°53'24"E

PARCEL 2-S-1

LINE	DISTANCE FT.	BEARING
A-B	22.70'	N89°19'26"W
B-C	11.60'	N42°13'17"W
C-D	7.94'	S47°46'43"W
D-E	5.00'	N42°13'17"W
E-F	7.94'	N47°46'43"E
F-G	35.52'	S85°45'55"E
G-A	10.06'	S08°59'45"W

NO.	DATE	DESCRIPTION	BY
1	6/9/94	REVISED PARCEL 2-S-1	RDJ

HOWARD NEEDLES TAMMEN & BERGENDOFF
ARCHITECTS ENGINEERS PLANNERS
HNTB

MADE BY: RDJ DATE: 11-92
DRAWN BY: DJF DATE: 11-92
CHECKED BY: PF DATE: 11-92
SCALE: AS SHOWN
11646\PLAN\RWPLAN1.DWG

RIGHT OF WAY PLAN - STA. 106+00 TO STA. 112+00

FHWA REGION	STATE	PROJECT	
5	OHIO		

411/412

7/8

CUYAHOGA COUNTY
CUY-6-14.99

THE FOLLOWING LEAD-IN BEARINGS AND DISTANCE ARE FROM P.T. STA. 104+50.00-POINT (AA) TO POINT (A) & (J), AT ALL TAKE PARCELS, ALONG ℄ DETROIT AVE:

PARCEL NO.	ALONG ℄ DETROIT AVE.	90° TO ℄
3-T	N47°46'43"E-1871.84'	℄ VETERANS-MEMORIAL
3-S	N47°46'43"E-1886.84'	℄ VETERANS-MEMORIAL
3-S-1	N47°46'43"E-2016.16'	℄ VETERANS-MEMORIAL
4-S	N47°46'43"E-2168.73'	S42°13'17"E- 23.55'
5-T	N47°46'43"E-2154.76'	N42°13'17"W-60.00'

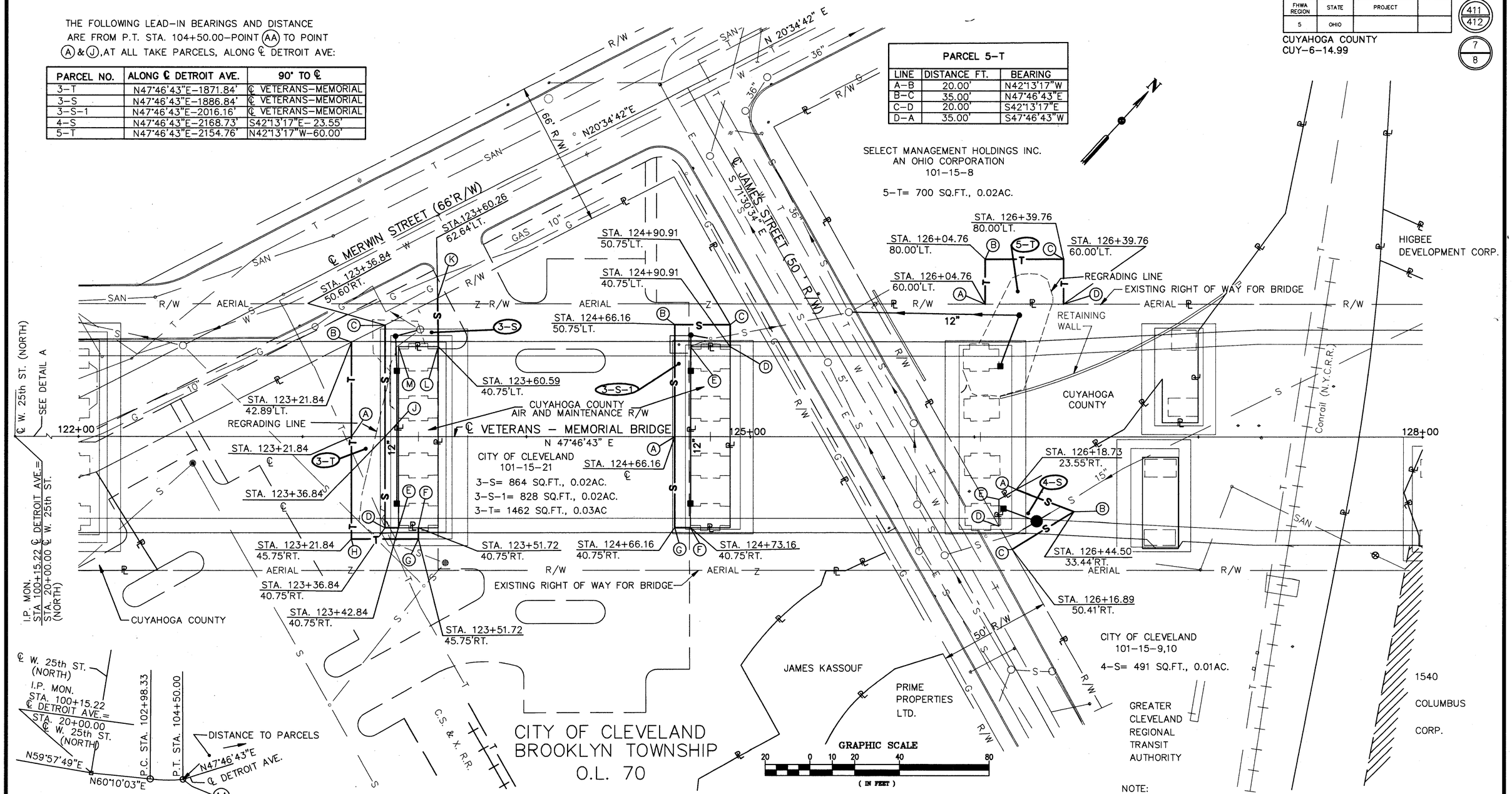

PARCEL 5-T		
LINE	DISTANCE FT.	BEARING
A-B	20.00'	N42°13'17"W
B-C	35.00'	N47°46'43"E
C-D	20.00'	S42°13'17"E
D-A	35.00'	S47°46'43"W

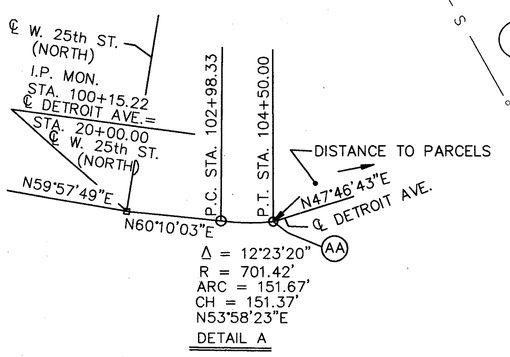

NOTE:
FOR PARCELS 1-S, 1-S-1, 2-S AND 2-S-1, SEE PLAN SHEET 5 OF 7.
FOR PARCELS 6-WD, 7-WD AND 7-T, SEE PLAN SHEET 7 OF 7.

PARCEL 3-T		
LINE	DISTANCE FT.	BEARING
A-B	42.89'	N42°13'17"W
B-C	16.87'	N20°34'42"E
C-D	91.35'	S42°13'17"E
D-F	14.88'	N47°46'43"E
F-G	5.00'	S42°13'17"E
G-H	29.88'	S47°46'43"W
H-A	45.75'	N42°13'17"W

PARCEL 3-S		
LINE	DISTANCE FT.	BEARING
J-C	50.60'	N42°13'17"W
C-K	26.32'	N20°34'42"E
K-L	21.89'	S43°06'10"E
L-M	17.75'	S47°46'43"W
M-E	81.50'	S42°13'17"E
E-D	6.00'	S47°46'43"W
D-J	40.75'	N42°13'17"W

PARCEL 3-S-1		
LINE	DISTANCE FT.	BEARING
A-B	50.75'	N42°13'17"W
B-C	24.75'	N47°46'43"E
C-D	10.00'	S42°13'17"E
D-E	17.75'	S47°46'43"W
E-F	81.50'	S42°13'17"E
F-G	7.00'	S47°46'43"W
G-A	40.75'	N42°13'17"W

PARCEL 4-S		
LINE	DISTANCE FT.	BEARING
A-B	27.60'	N68°46'44"E
B-C	32.41'	S16°11'48"W
C-D	12.04'	N71°30'34"W
D-E	12.02'	N42°13'56"W
E-A	8.87'	N18°29'26"E

NO.	DATE	DESCRIPTION	BY
1	6/9/94	REVISED PARCEL 4-S	RDJ

HOWARD NEEDLES TAMMEN & BERGENDOFF
ARCHITECTS ENGINEERS PLANNERS HNTB

MADE BY: RDJ DATE: 11-92
DRAWN BY: DJF DATE: 11-92
CHECKED BY: PF DATE: 11-92
SCALE: AS SHOWN
11646\PLAN\RWPLAN1.DWG

RIGHT OF WAY PLAN - STA. 122+00 TO STA. 128+00

FHWA REGION	STATE	PROJECT	
5	OHIO		

412/412

8/8

CUYAHOGA COUNTY
CUY-6-14.99

BROOKLYN TOWNSHIP
O.L. 51 & O.L. 70

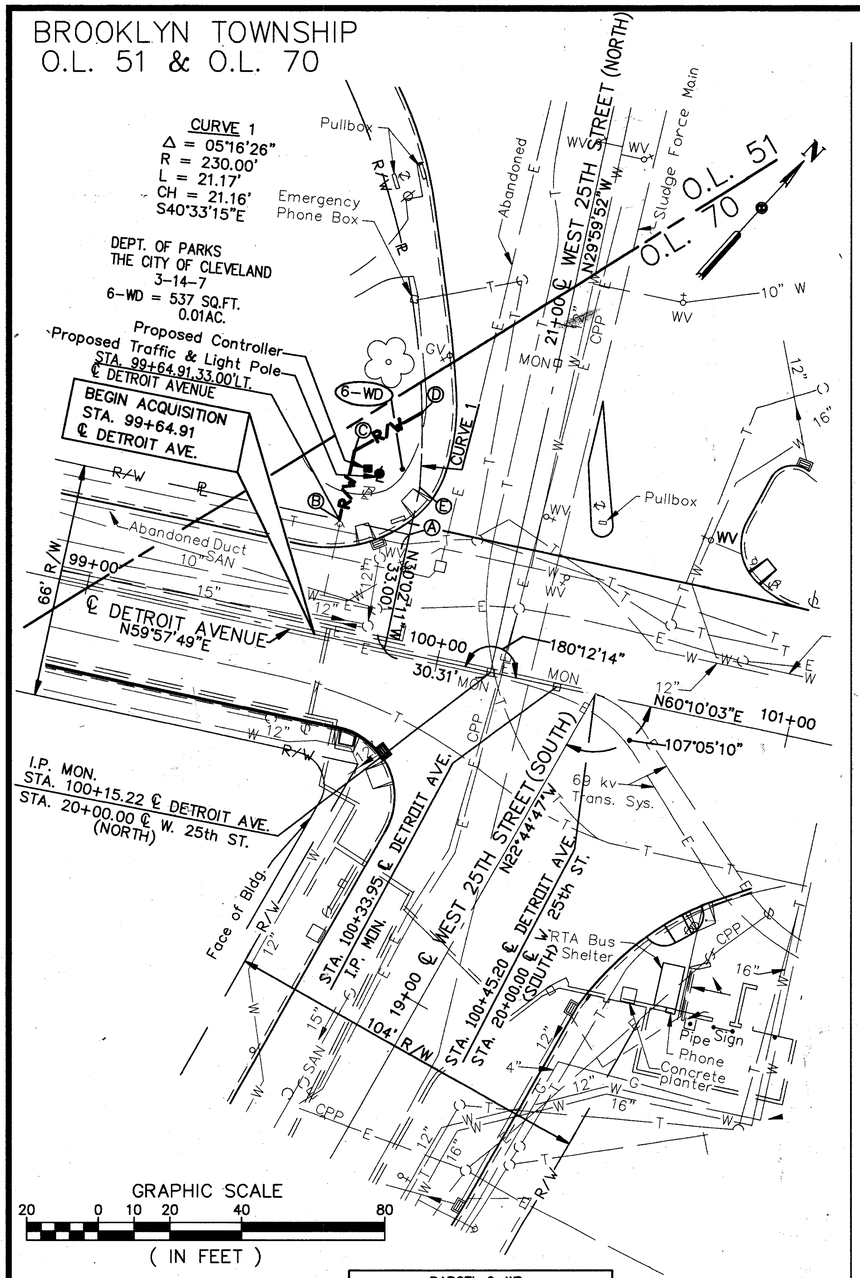

PARCEL 6-WD	
A TO B	S59°57'49"W-20.00'
B TO C	N30°02'11"W-20.00'
C TO D	N17°53'10"E-21.75'
D TO E	SEE CURVE 1 DATA
E TO A	S29°59'52"E-13.77'

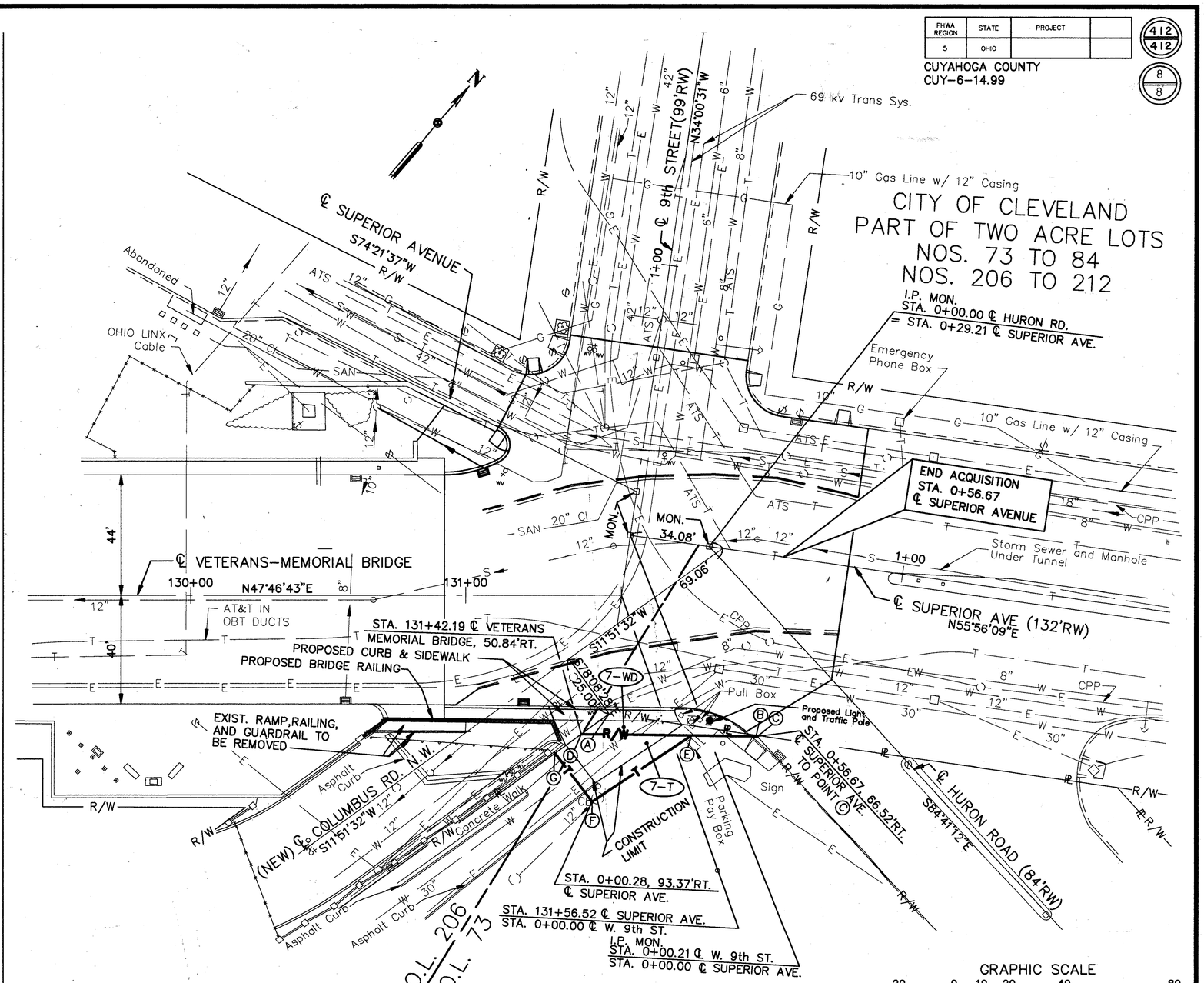

NOTE:
FOR PARCELS 1-S, 1-S-1, 2-S AND 2-S-1, SEE PLAN SHEET 5 OF 7.
FOR PARCELS 3-S, 3-S-1, 3-T, 4-S AND 5-T, SEE PLAN SHEET 6 OF 7.

PARCEL 7-WD	
A TO B	N55°56'09"E-54.18'
B TO C	S84°41'12"E-0.82'
C TO D	S48°44'06"W-64.16'
D TO A	N11°51'32"E-12.31'

PARCEL 7-T	
D TO E	N48°44'06"E-39.88'
E TO F	S14°12'27"W-43.28'
F TO G	N79°52'21"W-22.17'
G TO D	N11°51'32"E-12.01'

#1020 TERMINAL TOWER
TOWER CITY PROPERTIES
101-20-6
7-WD = 251 SQ.FT. -- 0.01 AC.
7-T = 622 SQ.FT. -- 0.01 AC.

NO.	DATE	DESCRIPTION	BY
1	6/9/94	Revised Parcel 6-WD	R.D.J.

HOWARD NEEDLES TAMMEN & BERGENDOFF
ARCHITECTS ENGINEERS PLANNERS
HNTB

MADE BY: RDJ DATE: 3/7/94
DRAWN BY: RDJ DATE: 3/7/94
CHECKED BY: PF DATE: 3/94
SCALE: AS SHOWN
11646/PLAN/RWPLAN1

RIGHT OF WAY PLAN VETERANS-MEMORIAL BRIDGE AND SUPERIOR AVE.